



aerospace
climate control
electromechanical
filtration
fluid & gas handling
hydraulics
pneumatics
process control
sealing & shielding





Hydraulic Filter Division Europe

Hydraulic and Heavy Duty Filtration and Contamination Control
Version 2.0



Parker

ENGINEERING YOUR SUCCESS.

Parker Hannifin Corporation

ENGINEERING YOUR SUCCESS.



The Parker Brand Promise

Parker is the global leader in motion and control technologies, partnering with its customers to increase their productivity and profitability.

aerospace
climate control
electromechanical
filtration
fluid & gas handling
hydraulics
pneumatics
process control
sealing & shielding

A global Fortune 300 company with customers in 48 countries, Parker Hannifin is the world's leading supplier of hydraulic, pneumatic, and electro-mechanical systems and components. Customers rely on Parker for engineering excellence, world-class manufacturing and outstanding customer service to provide comprehensive application solutions that are second to none.

- More than USD 13 billion in sales
- 298 plants worldwide
- 12,000 distributors
- 449,000 customers
- Serving 1,200 distinct markets
- Listed as PH on the New York Stock Exchange

Let Parker become part of your design team. Whether you need to develop new products, redesign existing applications, or design completely new systems, Parker offers unparalleled engineering expertise.







As the leader in the motion and control industry, Parker strives to be our customers' trusted partner. These relationships are cultivated by listening closely to our customers and repeatedly providing them with value measured in any currency: saved time, reduced waste, gained efficiency, expanded output and increased profitability.

Parker Filtration's global reputation as a reliable supplier of superior filtration products is the result of a focused and integrated development and manufacturing system.

Parker Filtration consolidates quality filtration products, manufactured by process filtration, air and gas filtration and separation, fuel conditioning and filtration, hydraulic and lubrication filtration, fluid power products and fluid condition monitoring equipment into one broad-based range that covers many markets and most applications, as detailed here.

Together in one catalogue are Parker Filtration's hydraulic and heavy duty filtration products and the proven range of analysis and contamination monitoring products now including Parker Kittiwake instruments.

Contents

Filtration and Reservoir Products

1. Low pressure filters
ETF Series – Tanktop mounted filters **(Previously 1200)** 15
TTF Series – Tanktop mounted filters 21
STF Series – Return Line filters 33
BGT Series – Tanktop mounted filters 39
IN-AGB Series – In-tank mounted filters 51
Tanktopper Series I, II & III – Tanktop mounted with integrated air breather 61
SR Series – Suction and return filters 69
PT Tank Top Mounted filters 77
Maxiflow Series – Spin-on filters 85
ATZ Series – Suction filters 91
Oil Conditioning Unit (OCU) 97

2. Medium pressure filters
12CS Series 104
15/40/80CN Series 110
45M/45 Eco Series **(Previously 1145)** 118

3. High pressure filters
15P/30P Series 124
100P Series **(Previously H600 and H1000)** 130
EPF iprotect® Series 135
EAPF iprotect® ATEX Certified Series 152
EMDPF iprotect® Series 160
EADPF iprotect® Series 172
18/28/38P Series 174
70/70 Eco Series **(Previously 7000)** 182
22PD/32PD Series 190

4. Filter Indicators
FMU Indicators and Pressure Indicators 196

5. Heavy duty filtration products
GS Series - Medium pressure in-line filters 203
GA Series - Medium pressure in-line filters 207
BGAH Series - Medium pressure in-line filters 213
BGLS Series - Low pressure in-line filters 219
SF1040 Series - Low pressure in-line filters 223
Eco 130 Series - Medium pressure filters 227
HFS and HFD Series - High Flow Single and Duplex Filters 235
FMB - Modular Filter Manifold Block 243
DF2145 Series - Duplex filters 246
DFBO Series - Duplex in-line filters 250
DF40 Series - Duplex in-line filters 253
DF2089 Series - Duplex filters 257
DF60 Series - Duplex filters 261
DF65 Series - Duplex filters 265
DF2110 Series - Duplex filters 269
DF2050 Series - Duplex filters 273
DF2035 Series - Duplex filters 277
DFH2060 Series - Duplex filters 281
DF2070 Series - Duplex filters 285

6. Par-Test
Laboratory Analysis Service 290

7. Portable filtration systems
Guardian® 294
Filtration Unit 298
10MFP Series 303
PVS Series – Models 185, 600, 1200, 1800 and 2700 311

8. PAR◇FIT
Interchange replacement element range 321

9. Marine PAR◇FIT
Interchange replacement element range 336

10. Static control media
Static Control filter elements 339

11. Par-Gel
Par-Gel Water Removal Elements 344

12. Reservoir equipment
Reservoirs
Co-polymer and steel reservoir solutions 349

Environmental Air Filters and Disposable Breathers
EAB Series 356
ABL Series 359
Triceptor 362

Glass-Filled Nylon Air Breathers
IP65 Rated Filler Breathers 365
Filler Breathers 368
Screw-On Type Air Breathers 369

Metal Filler Breathers
Filler Breathers (Metal) 372
Lockable Filler Breathers 374

Air Filters
Spin-On Air Breathers 375

Fluid Level Indication
Fluid Level Temperature Gauges 378
Reservoir Float & Level Switches 381

Fluid Power Products
Suction Elements 384
Diffusers 386
Inline Filters 387
Drive Couplings 388
Multiclamp 390
Inline Check Valves 395
Single Station Gauge Isolator Valves 396
63mm Dia. Pressure Gauges 397
100mm Dia. Pressure Gauges 398

Fluid Condition Monitoring and Flowmeters

13. Fluid condition monitoring
icountLCM20 Contamination Monitor 399
Universal Bottle Sampler 406
icountBSplus Bottle Sampler 411
Single Point Sampler 424
System 20 Sensors and Monitors 427
MCM20 Autoremote Monitor 432
icountPD Particle Detector 436
icountPDR 445
icountOS Oil Sampler 449
icount Monitoring System 460
Moisture Sensor Range 462
Oilcheck Monitor 469

14. Fuel hydrocarbon monitoring
icountACM20 Lab Unit 472
icountPD Z2 Particle Detector (ATEX Approved) 476
icountACM20 Z2 Particle Counter (ATEX Approved) 478

15. Parker Kittiwake Products
Proven analysers and instruments including the MHC Bearing Checker, ANALEXfdMplus ferous wear debris analyser, the Heated Viscometer and DIGI on-site Water in Oil monitoring kit. 484

16. Transducers and transmitters
Asic 'Performer' 490

17. Flowmeters and monitors
LoFlow – Oil and Water Flowmeters 495
Easiflow – Meters and Flowswitches 496
Dataflow – 4 to 20mA and Pulse Output Flow Transmitters 497
Dataflow Compact – Inline Flow Transmitter 498
Flowline – Oil and Water Calibrated Flowmeters (Brass and Aluminium) 499
Flowline – Oil and Water Calibrated Flowmeters (Stainless Steel) 500
Flowline – Flowswitches 501
Hydraulic Test Equipment 502
Flow Products – For Compressed Air Applications 503

18. Guide to contamination control
Guide to Contamination Control 509

Parker Hannifin
Hydraulic Filter Division Europe
FDHB500UK.

Tel: +45 63 12 83 00 | Email: ps@hymatik.com | www.hymatik.com | Hvidkaervej 27a, DK-5250 Odense SV, Denmark

Low Pressure Filters

Global products as identified are offered worldwide through all Parker locations and utilize a common ordering code.

ETF Series – Tanktop mounted return line filters - Page 15



- ETF utilizes a re-inforced co-polymer head equipped with 2 return ports.
- Quick-release cover design.
- Flow from inside to out.
- Maximum pressure 6 bar. Maximum flow 175 l/min.

TTF Series – Tanktop mounted return line filters - Page 21



- TTF features pre-filtration by means of a magnet column.
- Full flow bypass with low hysteresis.
- Maximum pressure 10 bar. Maximum flow 500 l/min.
- Options include a filling port in the filter cover and second return port.
- Patented *LEIF*® elements safeguard filtration quality.

STF Series – Return line filters - Page 33



- 'In-to-out' filtration design means contaminated oil cannot leak back into the system
- magnetic pre-filtration
- Cast iron filter head assembly
- multiple port configuration
- flows up to 500 L/min
- 10 bar maximum working pressure
- optional airtight diffusers
- *LEIF*® low enviromental impact filter elements as standard

BGT Series – Tanktop mounted return line filters - Page 39



- BGT features pre-filtration by means of a magnet column.
- Filter heads with multiple ports available.
- Full flow bypass with low hysteresis.
- Maximum pressure 10 bar. Maximum flow 2400 l/min.
- Patented *LEIF*® elements safeguard filtration quality.

IN-AGB Series – In–tank mounted return line filters - Page 51



- IN-AGB features a bypass construction with low hysteresis.
- Magnetic pre-filtration and a high dirt-holding capacity.
- Wide range of diffusers including airtight options.
- Flow rates from 30 l/min to 2400 l/min.
- Patented *LEIF*® elements safeguard filtration quality.

Tanktopper Series I, II & III – Tanktop mounted with integrated air breather - Page 61



- Tanktopper offers a total filtration solution with integrated air breather.
- In-to-Out filtration plus gauge and switch options.
- Maximum pressure 10 bar. Maximum flow 650 l/min.
- Patented *LEIF*® elements safeguard filtration quality.

SR Series – Tanktop mounted suction and return filters - Page 69



- SR capable of feeding filtered oil under positive pressure to the suction side of the boost pump.
- Filters both open and closed loop oil systems through one filter.
- Maximum pressure 10 bar. Maximum flow 250 l/min.
- SR uses patented *LEIF*® elements to safeguard filtration quality.

PT Tank Top Mounted filters - Page 77



- Return line filter for direct mounting in copolymer reservoirs.
- Parker designs safeguard filtration quality.
- In to out flow avoids re-contamination of the system.
- Flow capability up to 400 l/min.

Maxiflow Series – Spin-on filters - Page 85



- Maxiflow full flow filters for suction or return applications.
- Available with optional indicators.
- Maximum pressure 10 bar. Maximum flow 360 l/min.
- High quality filter medium.

Tel: +45 63 12 83 00 | Email: ps@hymatik.com | www.hymatik.com | Hvidkaervej 27a, DK-5250 Odense SV, Denmark

Low Pressure Filters continued

ATZ Series – Submersible suction filters - Page 91



- ATZ submersible suction filters locate below tank oil level.
- Pre-filtration takes place by means of a magnetic column.
- Maximum flow 300 l/min.
- In-to-Out filter stops contaminated oil leaking back into the system.

OCU – Oil Conditioning Unit - Page 97



- A range of off-line filtration 'packages'.
- Effective removal of water or particulate.
- A cost-effective method of reducing hydraulic and lube system contamination.

Medium Pressure Filters

12CS Series – Coreless Spin-on filters - Page 104



- 12CS features a re-usable coreless Ecoglass III element.
- Replaceable bowl design for easy element removal.
- Maximum pressure 35 bar.
- An eco filter solution for hydraulic systems

15/40/80CN Series – Medium pressure filters - Page 110



- CN utilizes a cast aluminium head and bowl.
- Excellent fatigue pressure ratings.
- Maximum pressure 70 bar. Maximum flow 600 l/min.
- An economic 'multi-purpose' filter solution.

45M/45M Eco Series – Medium pressure filters - Page 118



- 45M utilizes a cast iron head and steel bowl.
- Solves the problem of protecting system components at lower pressures.
- Maximum pressure 40 bar. Maximum flow 260 l/min.
- An ideal filter series for harsh environments.

High Pressure Filters

15P/30P Series – High pressure filters - Page 124



- 15P/30P utilizes a compact aluminium housing with 2 head sizes and 2 bowl lengths.
- Microglass III filter media.
- Maximum pressure 207 bar. Maximum flow 200 l/min.
- A quality filter for better control and long component life.

100P Series – High pressure filters - Page 130



- 100P design, only the bowl end-cap is removed on element change.
- Microglass III glassfibre media is standard.
- Maximum pressure 414 bar. Maximum flow 1000 l/min.
- An ideal solution where space is at a premium.

EPF - Page 135, EAPF - Page 152, EMDPF - Page 160 and EADPF - Page 172



- A new generation of high pressure filters.
- Manifold heads contribute to cost-effective integration of filters in a system.
- Rated at 450 bar for flows up to 700 l/min.
- Multiple bypass settings up to 7 bar.

18/28/38P Series – High pressure filters - Page 174



- Multiple bypass settings up to 7 bar.
- 18/28/38P features a range of head and bowl sizes and connection options.
- Microglass III glassfibre media is standard.
- Maximum pressure 414 bar. Maximum flow 700 l/min.

Parker Hannifin
Hydraulic Filter Division Europe
FDHB500UK.

High Pressure Filters continued

Global products as identified are offered worldwide through all Parker locations and utilize a common ordering code.

70/70 Eco Series – High pressure filters - Page 182



- 70/70 Eco features a range of head and bowl sizes and connection options.
- Microglass III glassfibre and Ecoglass III media is available.
- Maximum pressure 420 bar. Maximum flow 450 l/min.
- A proven filter offering high levels of system protection.

22PD/32PD Series – High pressure duplex filters - Page 190



- 22PD/32PD utilizes a duplex design with integrated balancing valve and vent ports.
- Microglass III glassfibre media is standard.
- Maximum pressure 210 bar. Maximum flow 260 l/min.
- Designed to offer continuous operation during element change.

Filter Indicators

FMU Δp – Indicators and pressure indicators - Page 196



- The FMU range of filter condition indicators, designed for use on a wide range of Parker filters
- Accurate visual, electronic or electrical filter condition feedback.
- Maximum pressure 420 bar.
- Mobile, industrial and marine applications.

Heavy Duty Filtration Products

GS Series – Medium pressure in-line filters - Page 203



- GS utilizes a cast iron housing design making it suitable for marine engine rooms and industrial gearbox installations.
- Microglass III or a cleanable metal mesh option.
- 3 different housing sizes can be specified.
- Maximum pressure 40 bar. Maximum flow 350 l/min.

GA Series – Medium pressure in-line filters - Page 207



- GA utilizes an 'in to out' design which eliminates contamination returning into the system.
- Microglass III, Ecoglass III media or a cleanable metal mesh option.
- Maximum pressure 30 bar. Maximum flow 230 l/min.
- An ideal solution for metal cutting equipment.

BGAH Series – Medium pressure in-line filters - Page 213



- BGAH is an ideal in-line solution for straight pipelines.
- Microglass III, Ecoglass III media or a cleanable metal mesh option.
- Patented *LEIF*® elements safeguard filtration quality.
- Maximum pressure 25 bar. Maximum flow 500 l/min.
- Highly customizable for differing applications.

BGLS Series – Low pressure in-line filters - Page 219



- BGLS utilizes an aluminium upper housing and steel lower housing.
- Low weight with high capacity solution.
- Maximum pressure 10 bar. Maximum flow 2000 l/min.
- Ideal for lube systems, wind turbines and hydraulic presses
- Patented *LEIF*® elements safeguard filtration quality.
- Microglass III, Ecoglass III media or a cleanable metal mesh option.

SF1040 Series – Low pressure in-line filters - Page 223



- SF1040 features a strong welded steel housing with DN80 or DN100 connections.
- Microglass III glassfibre media or a cleanable metal mesh option.
- Maximum pressure 10 bar. Maximum flow 1400 l/min.
- Ideal for gas and high flow systems.

Heavy Duty Filtration Products continued

Eco 130 Series – Medium pressure filters - Page 227



- Eco 130 is a versatile, modular filter system.
- Ability to bank multiple filters together in a 'duplex' format.
- Maximum pressure 30 bar. Maximum flow 1000 l/min.
- Microglass III, Ecoglass III media or a cleanable metal mesh option.

HFS and HFD Series – High Flow Single and Duplex Filters - Page 235



- Steel industry, paper mills, marine applications and power generation
- Lubricating systems fuel filtration
- Coolant filtration

FMB – Modular filter manifold block - Page 243



- Modular manifold solution
- Light weight aluminium design
- Ideal for industrial gearbox applications

DF2145 Series – Duplex filters - Page 246



- DF2145 duplex utilizes a robust cast iron housing for secure, continuous filtration.
- Microglass III, Ecoglass III media or a cleanable metal mesh option.
- Maximum pressure 30 bar. Maximum flow 80 l/min.
- A high specification filter for fuel, lube and hydraulic systems.

DFBO Series – Duplex in-line filters - Page 250



- DFBO duplex brings Parker Racor FBO filters to the marine engine room.
- Ensuring efficient water separation at all times.
- Maximum pressure 10 bar. Maximum flow 90 l/min.
- 2 bowl lengths, easy service and no special tools required.

DF40 Series – Duplex in-line filters - Page 253



- DF40 duplex utilizes a cast iron and steel design ideal for marine applications such as engine room installations.
- Microglass III, Ecoglass III media or a cleanable metal mesh option.
- Maximum pressure 40 bar. Maximum flow 200 l/min.
- Ideal for fuel, lube and hydraulic fluid systems.

DF2089 Series – Duplex filters - Page 257. DF60 - Page 261. DF65 - Page 265



- DF2089 duplex utilizes a cast iron housing with 'in to out' flow to hold back contamination even during element change.
- Microglass III or a cleanable metal mesh option.
- Maximum pressure 30 bar. Maximum flow 350 l/min.
- A high specification filter for fuel, lube and hydraulic systems.

DF2110 Series – Duplex filters - Page 269



- DF2110 duplex is a 'heavy-duty' performer with high in to out flow to hold back contamination even during element change.
- Microglass III or a cleanable metal mesh option.
- Maximum pressure 30 bar. Maximum flow 1200 l/min.
- DN80 PN25 connections.

DF2050 Series – Duplex filters - Page 273



- DF2050 duplex features a cast iron housing with high dirt holding capacity yet low pressure drop.
- Microglass III or a cleanable metal mesh option.
- Maximum pressure 30 bar. Maximum flow =>1000 l/min.
- DN80 PN25 connections.

DF2035 Series – Duplex filters - Page 277



- DF2035 duplex utilizes an aluminium housing providing a lightweight, high capacity filter solution.
- Microglass III or a cleanable metal mesh option.
- Maximum pressure 8 bar. Maximum flow 600 l/min.
- Ideal for industrial gear and diesel engine lube systems.

Global products as identified are offered worldwide through all Parker locations and utilize a common ordering code.

Heavy Duty Filtration Products continued

DFH2060 Series – Duplex filters - Page 281



- DFH2060 duplex slim design provides maximum performance with minimum installation height.
- Microglass III or a cleanable metal mesh option.
- Maximum pressure 10 bar. Maximum flow 2200 l/min.
- Ideal for industrial and heavy duty diesel engine lube systems.

DF2070 Series – Duplex filters - Page 285



- DF2070 duplex design provides a welded housing with cast iron change over valve.
- Microglass III or a cleanable metal mesh option.
- Maximum pressure 10 bar. Maximum flow 1800 l/min.
- Ideal for diesel engine and high flow industrial lube systems.

Par-Test – Page 290



- The Par-Test service is a complete laboratory analysis service.
- Analysis is performed on a small quantity of fluid supplied by the customer.
- Parker Filtration has 3 European laboratory locations.
- The resulting Par-Test report is comprehensive in its detail.

Portable Filtration Systems

Guardian® Portable filtration system - Page 294



- Guardian® is designed to 'clean' new oil and deliver it to a system.
- Carries out a clean up of used fluid to its original condition.
- Maximum pressure 3.4 bar. Maximum flow 15 l/min.
- Filters petroleum based oils, water emulsions and diesel fuels.

Filtration Unit - Page 298



- Filtration unit offers both permanent and offline fluid cleaning where higher levels of contamination are expected.
- Lightweight design. Spin-on 10 micron Abs. element.
- Maximum pressure 6 bar. Maximum flow 15 l/min.
- Robust construction.

10MFP Hydraulic trolley - Page 303



- 10MFP hydraulic trolley is the ideal way to pre-filter and transfer fluids into reservoirs or to clean up a system.
- Heavy-duty frame but still lightweight and portable.
- Maximum flow 38 l/min.
- Par-Gel™ water removal elements available.

PVS Series-Models 185, 600, 1200, 1800 and 2700 - Page 311



- PVS draws water contaminated fluid out of a system.
- Removes water content and returns the 'clean' fluid to the reservoir.
- Maximum flow 170 l/min (PVS2700).
- Reduce the catastrophic results of water contamination.

PAR◇FIT™

Interchange replacement element range - Page 321

- **PAR◇FIT**™ elements are manufactured to the same exacting standards as Parker original elements using Microglass III and Ecoglass III media.
- Interchange elements for Pall, Hydac, Mahle, Internormen, MP Filtri, Donaldson and over 140 more manufacturers.
- Cross reference information available for over 50,000 part numbers.
- Marine **PAR◇FIT**™ options available.

Tel: +45 63 12 83 00 | Email: ps@hymatik.com | www.hymatik.com | Hvidkaervej 27a, DK-5250 Odense SV, Denmark

Static Control Media - Page 339



- An effective method of reducing the overall impact of the electro-static process.
- Supports the reduction of varnish sealed in an oil system.
- Static Control elements typically extend oil life time.

Par-Gel™

Water removal filter elements - Page 344



- Par-Gel™ elements control water related problems in hydraulic power and lubrication systems.
- Helps reduce component wear and system downtime.
- Increases system efficiency and machine productivity.
- Reduces the chance of catastrophic system failure.

Reservoir Equipment

Environmental air filters and disposable breather - Page 355



- EAB Series – air flows up to 1500 l/min. Visual gauge option.
- ABL Series – 3 micron Abs. *LEIF*® element. 2 sizes.
- Triceptor – easy to fit, disposable when the silica gel turns to pink.

Glass-filled nylon air breathers - Page 365



- Moulded in non-corrodible, glass-filled nylon – strong and light.
- Single hole, 6 hole and 3 hole installation.
- Screw-on breather range – G1/2 and G3/4 options.
- Compact range – G1/4, G3/8, R1/2 and R3/4 options.

Metal filler breathers - Page 372



- Metal filler breathers – pressurized threaded type.
- Metal filler breathers – unpressurized threaded type.
- Filter flange type.
- Lockable range for reservoir security and oil protection.

Air filters - Page 375



- High capacity air breathers to remove airborne contamination.
- Disposable, 5 micron nominal quality elements.
- Models – 700, 1500, 1700 and 3000 l/min.
- Ideal for high flow heavy contamination systems.

Fluid level indication - Page 378



- 3 sizes of fluid level/temperature gauge. 2 hole mounting.
- 76mm, 127mm and 254mm mounting centres.
- Adjustable float switches – 3 lengths available.
- Capacitive level switch designed to give a low level alarm.

Fluid Condition Monitoring

icountLCM20 portable particle counter - Page 399



- 2-minute test procedure
- Multi-standard ISO, NAS and AS4059 cleanliness reporting.
- Data entry, data graphing and integral printer.
- Single Point Samplers (SPS's) are fingertip operated control valves that connect icountLCM20 and H2Oil into a system.

Fluid Condition Monitoring continued

Global products as identified are offered worldwide through all Parker locations and utilize a common ordering code.

Universal Bottle Sampler - Page 406



- The UBS advances LCM20's flexibility into Lab environments.
- Simple operation. Efficient test procedure.
- Clean and contamination free sampling.

icountBSplus bottle sampler - Page 411



- icountBSplus provides quick sample bottle analysis with variable test time options from 15 seconds and volume capacities from 10ml.
- Repeatable and re-producible results performance, calibration carried out to ISO11171 via ISO11943 principles.
- Design concept allows for portability with DC and rechargeable battery power options built-in.
- Sample tube self-cleaning sleeve minimizing contamination crossover.
- CE Marked.

icount Mini-Lab - Page 422



- icount Mini-Lab is the portable solution to fluid contamination bottle sampling, using the icountBS bottle sampler.
- Cleanliness awareness and monitoring control is only an oil sample away with the easy, 3-step/2 minute fluid analysis process.
- On-screen, full 256 colour, backlit STN transmissive.
- A cost-effective alternative to external laboratory service.
- Interactive software provides templates for printing 2-page analysis reports including ISO compliant results, raw data for full-sweep, particle size counts and graphs.

System 20 sensors and monitors - Page 427



- 3 sizes of inline System20 sensor for pressures up to 420 bar.
- Analogue monitor utilizes 3 day-glow gauges with protective cover.
- EM20 electronic monitor with full digital display and 300 test memory.
- For use with all mineral oils, water and water/oil emulsions.

MCM20 autoremote monitor - Page 432



- MCM20 online continuous particle counting ensures constant system monitoring within defined parameters.
- Calibration carried out to ISO1171 via ISO11943 principles. Multi-standard ISO and NAS reporting including full count/100 ml. detection at size ranges.
- Interactive handset options available for direct test sequencing, change test parameters and last test results.
- PC/PLC controlled.
- Can be pre-set to carry out tests at specific intervals.
- Connects permanently to a System20 sensor via 2 metre hose assembly.

icountPD particle detector - Page 436



- icountPD provides online and independent monitoring of system contamination trends.
- Laser diode light obscuration technology for repeatable results.
- Calibration to approved, on-line methods.
- Early warning LED or digital display indicators for low, medium and high contamination levels.
- Moisture RH% indicator option for real time water ingress awareness before saturation damage occurs.
- Fully PC/PLC integration technology such as:
  - RS232/485, 0-5V, 4-20mA, CANBUS (J1939).

icountPDR 'Robust' Particle Detector - Page 445



- Rugged design ensures protection against environmental exposure
- Independent monitoring of system contamination trends
- Small and compact device constructed in stainless steel

Fluid Condition Monitoring continued

icountOS Oil Sampler - Page 449



- Fluid viscosity as high as 300cSt (usable range) will be able to pass through the detector at the proper flow rate.
- Quick connections for testing hydraulic fluid online and offline.
- Able to sample directly from a hydraulic reservoir, barrel and vehicle fuel tank or from a high pressure, online hydrualic system with the addition of a pressure reducing adaptor.
- Data Storage up to 250,000 test points of information.

MS moisture sensor range - Page 462



- MS moisture sensors provide fast, reliable and accurate inline detection of moisture in fluids
- Technology developed for preventative maintenance programmes.
- MS150 'low pressure' suction line/reservoir applications. Temperature outputs. 10 bar maximum operating pressure.
- MS200 'Programmable' sensor monitoring and reporting relative humidity (RH), moisture content in oils.
- MS300 'Intrinsically safe' sensor ATEX certified for use in hazardous Zone environments.

Fuel Condition Monitoring

icountACM20 contamination monitor - Page 472



- icountACM20 monitors aviation fuel contamination to DEFSTAN 91-91 Jet A-1 fuel specification.
- A proven product that adopts Energy Institute Test Method IP 564.
- 2-minute test procedure. Multi-standard ISO cleanliness reporting.
- On-board, case-mounted pump means direct monitoring at a fuel storage tank for example is possible.

icountPD Z2 – Fuel particle detector - Page 476



- Independent monitoring of system contamination trends.
- Assembled in an approved and certified Stainless Steel enclosure to comply with ATEX Directive 94/9/EC.
- Can be used in explosive and hazardous areas.
- Mineral oil versions available.

icountACM20 Z2 - Page 478



- icountACM20 Z2 is assembled in an approved and certified Stainless Steel enclosure.
- Complies with ATEX Directive 94/9/EC and EN50 021 requirements.
- Designed for use in explosive and hazardous areas including offshore and mining applications.
- Has all the features of an icountLCM20 and an icountACM20.

Transducers and Transmitters

Asic 'Performer' - Page 490



- A quality range of transducers and transmitters with pressure ratings - 25, 60, 100, 250, 400 and 600 bar.
- One-piece body and diaphragm machining ensures long-term stability.
- All Stainless Steel construction.

Flowmeters and Monitors

Flowmeters, Flowswitches and Flow Monitors - Page 494



- LoFlow oil and water flowmeters. 10 bar max. working pressure.
- Easiflow meters and Flowswitches. Work in any plane. Flows from 1 to 150 l/min.
- Dataflow 4-20mA and pulse output flow transmitters and Dataflow Compact inline flow transmitter.
- Flowline oil, water and air calibrated flowmeters and flowswitches available in brass or Stainless Steel.
- Hydraulic Test Units for the diagnosis of hydraulic circuit faults with flow ranges from 2 to 360 l/min.

Important changes to our product ordering information

Standard Product Tables and a Product Configurator

Parker Filtration undertook a review of its part numbering with a view to standardising on a common part number style for all Filtration products. As a result of the many acquisitions we have made over the past 10 years, it became clear to us that there was a need to standardise on a clear format for our part numbers.

Accordingly, in this catalogue, you will find the new part number system with both a configurator and a supersedes cross reference relating to previous part numbers, issued in earlier editions of our generic catalogues. In the event that the previous reference you use is not shown in this catalogue, could we ask you to please contact our European Product Information Centre. Contact details are on the back of this catalogue.

The examples below using the BGT Series Ordering Information, are included to explain how the Standard products are presented in the Ordering Information section of the catalogue and also how the Product Configurator works.

Explanation

Example 1. The Standard Products Table

We have created a catalogue ordering code and included in this table are details of these new part numbers.

Alongside this we have put the part number that has been superceded from previous catalogues.

Example 2. The Product Configurator

2a. As part of our catalogue ordering code we have introduced an **8-box part number configurator**. This configurator features items, which are marked in **bold** and are on a shortened delivery time. With this in mind we would ask that when making a selection using the configurator you select those items in bold to ensure the shortest lead-time.

2b. The configurator has been designed to cover not only the various models we offer but also different micron ratings, indicator options and port connections.

2c. Should you find that what you have selected is not available in the configurator, please feel free to call our European Product Information Centre (EPIC) to see if that option can be made available. Contact details are available on the back of this catalogue.

Green shaded graphs and ordering information

Where pressure drop graphs and ordering information are shown with a green tint, these options are 'Eco' options and environmentally friendly.

Example 1. The Standard Products Table

Part number	Supersedes	Flow (l/min)	Model number	Element length	Media rating (µ)	Seals	Indicator	Bypass settings	Ports	Included options	Replacement elements	Supersedes
BGT1210QLBPER323	BGTS500-S2 TXWL8C-10 T B15 M	500	BGT500	Length 12	10	Nitrile	Plugged	1.5 Bar (22 Psi)	2"SAE-3000 PSI	Diffuser type T	**937859Q**	TXWL8L-10
BGT1220QLBPER323	BGTS500-S2 TXWL8C-20 T B15 M	500	BGT500	Length 12	20	Nitrile	Plugged	1.5 Bar (22 Psi)	2"SAE-3000 PSI	Diffuser type T	**937866Q**	TXWL8L-20
BGT1510QLBPER483	BGTS1000-S3 TXWL12-10 T B15 M	1000	BGT1000	Length 15	10	Nitrile	Plugged	1.5 Bar (22 Psi)	3"SAE-3000 PSI	Diffuser type T	**937862Q**	TXWL12-10
BGT1520QLBPER483	BGTS1000-S3 TXWL12-20 T B15 M	1000	BGT1000	Length 15	20	Nitrile	Plugged	1.5 Bar (22 Psi)	3"SAE-3000 PSI	Diffuser type T	**937865Q**	TXWL12-20
BGT1710QBPER483	BGTS2000-S3 TXW14-10 T B15 M	2000	BGT2000	Length 17	10	Nitrile	Plugged	1.5 Bar (22 Psi)	3"SAE-3000 PSI	Diffuser type T	**937772Q**	TXW14-10B
BGT1720QBPER483	BGTS2000-S3 TXW14-20 T B15 M	2000	BGT2000	Length 17	20	Nitrile	Plugged	1.5 Bar (22 Psi)	3"SAE-3000 PSI	Diffuser type T	**937805Q**	TXW14-20B

Note: Filter assemblies ordered from the product configurator below are on extended lead times. Where possible, please make your selection from the table above.

Example 2. The Product Configurator

Configurator examples filter including *LEIF*® element

Box 1	Box 2	Box 3	Box 4	Box 5	Box 6	Box 7	Box 8
BGT	**15**	**05QL**	**B**	**S1**	**E**	**R48**	**C**

Configurator examples filter including conventional element

Box 1	Box 2	Box 3	Box 4	Box 5	Box 6	Box 7	Box 8
BGT	**18**	**02Q**	**B**	**S4**	**E**	**3R20**	**4**

Box 1

Code
BGT

Box 2

Filter type	
Housing	Code
3-390 l/min	11
3-500 l/min	**12**
4-600 l/min	13
4-800 l/min	14
4-1000 l/min	**15**
4-1500 l/min	16
4-2000 l/min	**17**
4-2400 l/min	18

Box 3

Degree of filtration					
Element		Glass fibre			
		Microglass III (for disposable elements)			
	Cellulose	Ecoglass III (for *Leif*® elements)			Wire mesh
	Nom. rating				Abs. rating
Disposable element	10C	02Q	05Q	**10Q**	**20Q**	D40W
***LEIF*® element**		02QL	**05QL**	**10QL**	**20QL**	

Box 4

Seal type	
Seal material	Code
Nitrile	**B**
Fluorelastomer	V
Neoprene	N

Box 5

Indicator	
Pressure gauge, setting 1.2 bar, M10x1	**G1**
Pressure gauge, setting 1.2 bar, G¼ for dual port head	G2
Pressure switch 42V, 1.2 bar setting, NO/NC, M10x1	**S1**
Pressure switch 42V, 1.2 bar setting, NO with G¼ BSP	S2
Pressure switch 42V, 1.2 bar setting, NC with G¼ BSP	S3
Pressure switch 250V, NO/NC with G¼	S4
Pressure switch 220V, NO/NC with M10	S5
No indicator, indicator ports not machined	N
No indicator, indicator port R plugged	**P**
No indicator, indicator ports L + R plugged	P2
Other settings for indicators / gauges on request	on request

Note: For all dual head ports for BGTS apply G¼ connection for indicators

Box 6

Bypass valve	
Bypass valve	Code
0.8 bar	B
1.5 bar	**E**
2.0 bar for BGT-3 series	H
Blocked bypass	X
Other bypass settings	on request

Box 7

Filter connection	
Ports	Code
2" SAE BGT-3	**R32**
3" SAE BGT-4	**R48**
1x2" SAE flanged + 2x1"/₁₆" SAE flanged for BGT-3	R32M
3x1"/₁₆" SAE flanges + 1x"/₁₆" SAE for BGT-4	3R20

Box 8

Options	
Options	Code
No diffuser required	**1**
Diffuser type T with perforated plate area	**3**
Diffuser type P without perforated plate area	4
Diffuser with integrated hose connection	on request
No magnets	5
Dipstick	6
Plugged filling port	8
Diffuser type T and no magnets	A
Diffuser type P and no magnets	B
Diffuser type T, no magnets, plugged filling port	C
Diffuser type P, no magnets, plugged filling port	D

Highlights Key (Denotes part number availability)

123	Item is standard
123	Item is standard green option
123	Item is semi standard
123	Item is non standard

Parker Hannifin
Hydraulic Filter Division Europe
FDHB500UK.

Tel: +45 63 12 83 00 | Email: ps@hymatik.com | www.hymatik.com | Hvidkaervej 27a, DK-5250 Odense SV, Denmark

Parker's Value Proposition





Parker's Value Proposition

Parker is the leading filtration supplier worldwide. We have a powerful reputation, unparalleled breadth of products, and world-class customer service. However, Parker's greatest distinguishing benefits can be found in its Value Proposition. Parker believes that it takes more than our great products, competitive prices, and on-time delivery to satisfy customer demands. It takes a commitment to provide exceptional value.

At Parker, value is not a commodity. It is the result of personal relationships built around the customer's use of Parker's extensive resources. Our customer services include:

- **Design-Engineering Support**
- **System Design**
- **Components Selection**
- **New Product Development**
- **Custom-Component Manufacturing**
- **Assemblies and Kits**
- **Sub-System Configuration**
- **Global Support and Service**
- **ISO Certification**

Installing Parker Filtration filter assemblies such as the Suction and Return Series and *LEIF*® (Low Environmental Impact Filter) elements can provide the end user and OEM with some positive benefits:

- *LEIF*® can provide increased OEM spares business.
- Guaranteed Parker quality with every replacement filter element.
- Supports OEM end user loyalty to Parker elements.
- Support aftermarket sales and machinery performance.
- Parker elements promote quality and reliability to end users.

Providing the products and service our customers expect

A Global Product Range

With this catalogue we offer our customers an easy way to find technical specification and ordering information about Parker hydraulic filtration, fluid contamination monitoring and fluid power products.

Products shown in this catalogue have a broad range of applications. Our filter products are particularly designed for hydraulic and lubrication systems and transmissions. The fluid power products are also used in many industries and applications.

Typical applications can vary from road sweepers, fork lift trucks, agriculture harvesting machines, grass cutting equipment, lorry mounted cranes, forestry equipment, press brakes, industrial power units, waste management trucks, drilling equipment, marine, military equipment, paper mills, water treatment and filtration systems.

For more information about our products send your inquiry to your nearest sales location, see contact information at the back of this catalogue.

Important information on product ordering and part numbers

Parker Filtration has recently undertaken a review of its part numbering with a view to standardising on a common part number style for all Filtration products. As a result of the many acquisitions we have made over the past 10 years, it became clear to us that there was a need to standardise on a clear format for our part numbers.

Accordingly, in this new catalogue you will find the new part number system with a 'product configurator' and a supersedes reference relating to previous part numbers issued in earlier editions of our generic catalogues. In the event that the previous reference you have is not shown in this catalogue, could we ask you to please contact our Epic Centre, details of which are on the back cover of this catalogue.

For additional information and an example explained, turn to page 12.

BSP ports offered in this catalogue conform to ISO228.

Supply chain management, service and support

Parker is addressing operation efficiency by expanding the systematic approach called 'Lean Manufacturing. Value stream analysis, flow manufacturing, reduced set-ups, manufacturing cell flexibility and fool-proofing systems are all contributing to the continuous improvement in our manufacturing sites. 'Lean' is also expressed in our premier customer service and second-to-none customer partnerships in supply chain management.

Engineering and manufacturing excellence

Parker Filtration's Filtration Group Europe (FGE) manufacturing focus is driven by a number of key elements that affect all areas of the business. People productivity, customer satisfaction, production throughput, quality and lean achievements are the drivers that help the FGE achieve ISO9001, QS9000, ISO9001 and ISO14001.

Significant investment by our parent Parker Hannifin Corporation continues to give FGE flexible manufacturing systems, automated test equipment and excellent laboratory test facilities.

New product development programmes and on-going product improvement initiatives are vital elements in maintaining a product range that meets customer demands for quality, reliability and engineering excellence.

R & D resources at the Parker Filtration locations in the UK, Finland and the Netherlands are both complimentary and comprehensive. Including, as examples, Multipass Test Installations, fatigue test unit, cleanliness service (water detection, special analysis, particle counting and analysis), 3D workstations, Thermal Cycle Test Chamber, Salt Spray and Humidity chambers.

Parker Hannifin Corporation herewith declares that Parker Hydraulic Filtration products are intended to be incorporated into machinery covered by Directive 89/392/EEC, as amended and that the following harmonised standards have been applied; EN982, EN292-1, EN292-2

We furthermore declare that, machinery incorporating Parker Hydraulic Filtration products, is not allowed to be put into service until the machinery has been found and declared to be in conformity with the provisions of Directive 89/392/EEC and with national implementing legislation.

In line with our policy of continuous product improvement, Parker Hannifin reserve the right to alter product data and specification without notice. This does not affect your statutory rights.

Notes:
1. Within this catalogue, each product has been allocated an operating temperature and pressure range.
2. The range listed for each filter is dedicated by the materials of construction and the capability of the seals specified.
3. Consideration should also be given to the characteristics of the system fluid when specifying filters for extreme temperature and/or pressure applications.
4. The use of non-Parker replacement elements and spares may invalidate your warranty.

Tel: +45 63 12 83 00 | Email: ps@hymatik.com | www.hymatik.com | Hvidkaervej 27a, DK-5250 Odense SV, Denmark

ETF Series

Tanktop Mounted Return Line Filters
max. 175 l/min - 6 bar



An economic return line filter

Improved system protection

The ETF Series utilizes a re-inforced co-polymer head equipped with 2 return ports and quick-release cover. Maximum pressure 6 bar. Maximum flow 175 l/min. An economic return line filter that has been used and proven in many hydraulic filtration applications.



Contact Information:

Parker Hannifin
Hydraulic Filter Division Europe

European Product Information Centre
Freephone: 00800 27 27 5374
(from AT, BE, CH, CZ, DE, EE, ES, FI, FR, IE, IT, PT, SE, SK, UK)
filtrationinfo@parker.com

www.parker.com/hfde

Product Features:

- ETF utilizes a re-inforced co-polymer head equipped with 2 return ports.
- Quick-release cover design.
- Flow from inside to out.
- Maximum pressure 6 bar. Maximum flow 175 l/min.
- An economic return line filter for hydraulic systems.

ETF Series

Tanktop Mounted Return Line Filters

Features & Benefits

Features	Advantages	Benefits
Co-polymer head	Compact profile, lightweight and durable	Less weight, smaller envelope and cleaner appearance
Multiple return line ports	Flexibility related to return line hose(s) arrangement	More compact solutions can be realised
Quick release cover	No tools required to release the filter cover	Easy change of filter element
Optional magnetic pre-filtration	Removes ferro particles, even during bypass conditions	Improved fluid cleanliness levels
In-to-Out filtration	All captured contamination retains inside the element	No recontamination of system during change of elements
Quick response bypass with low hysteresis	Reduction of bypass period due to low hysteresis	Improved protection of system
	Only a small part of the total flow is bypassing the element	
Optional funnel	Ensures that oil enters the tank under the oil level	Significant reduction of oil foaming

Typical Applications

- Lorry mounted cranes
- Agricultural equipment
- Container hook loaders



The Parker Filtration ETF Series Low Pressure Filters

For tank top mounting installation. The ETF Series utilises a reinforced co-polymer head equipped with two return ports and quick release cover. This filter represents an economic solution for hydraulic systems with nominal flows up to 175 l/min.

Tel: +45 63 12 83 00 | Email: ps@hymatik.com | www.hymatik.com | Hvidkaervej 27a, DK-5250 Odense SV, Denmark

Specification

Pressure ratings:
Max. 6 bar.

Assembly:
Tank top mounted.

Connections:
Threads G1" + G1" (ISO 228), port B supplied as plugged connection.

Filter housing:
Glass reinforced co-polymer.
Funnel made from steel.

Seal material:
Nitrile.

Operating temperature range:
-20° to +80°C.

Bypass valve:
Opening pressure 1.6 bar.

Filter element:
Conventional style element with steel end caps.

Degree of filtration:
Determined by multipass test according to ISO 16889.

Flow fatigue characteristics:
Filter media is supported so that the optimum fatigue life is achieved.

Filtration media:
Microglass III.

Element burst rating:
8 bar (ISO 2941).

Indicator options:
Setting 1.0 bar.

Fluid compatibility:
Suitable for use with mineral and vegetable oils, and some synthetic oils. For other fluids, please consult Parker Filtration.

Installation Details

ETF Length	Dimensions mm (inches)	A	B
1	ETF45	82 (3.22)	100 (3.94)
2	ETF60	106 (4.17)	125 (4.92)
3	ETF90	150 (5.90)	177 (6.97)
4	ETF120	200 (7.87)	225 (8.86)
4A	ETF140	260 (10.24)	300 (11.81)
4B	ETF175	350 (13.78)	375 (14.76)

mm
(inches)

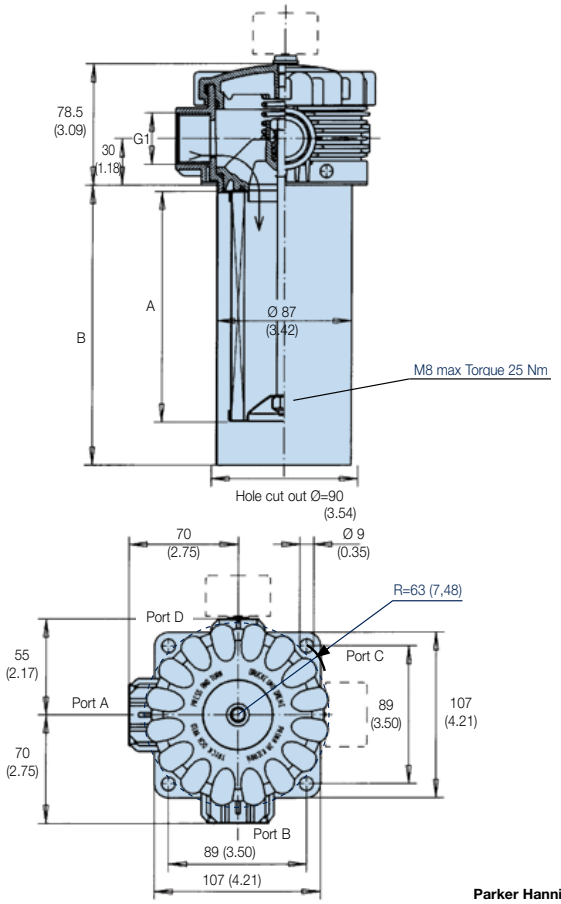

Parker Hannifin
Hydraulic Filter Division Europe
FDHB500UK/ETF

ETF Series

Tanktop Mounted Return Line Filters

Indicator Details

Visual pressure indicator

Code G2

mm (inches)

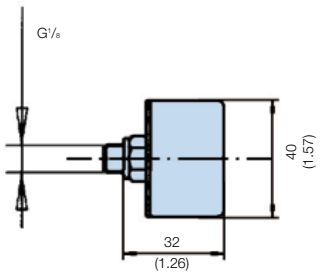

48 Vdc electrical indicator 1.2 bar

Code S2/S3

mm (inches)

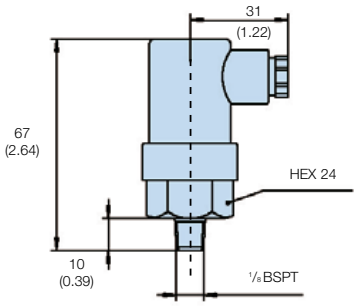

250 VAC electrical indicator 1.2 bar

Code S4

mm (inches)

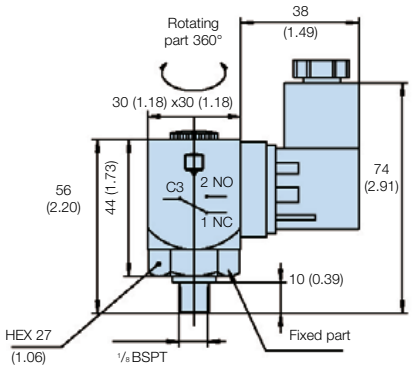

Option	Description	Connection/Voltage	Wiring	Part number
G2	Visual indicator 1.0 bar	N/A	N/A	FMUG2FBMG02L
S2/S3	Electrical indicator 1.0 bar	42 Vdc max	 Select either normally open (NO) or normally closed (NC)	FMUS2FBMG02L or FMUS3FBMG02L
S4	Electrical indicator 1.0 bar	250 VAC max	 1 NC 2 NO 3 C	FMUS4FFAG02L

Normally open contacts



Normally closed contacts



Tel: +45 63 12 83 00 | Email: ps@hymatik.com | www.hymatik.com | Hvidkaervej 27a, DK-5250 Odense SV, Denmark

Pressure Drop Curves

The recommended level of the initial pressure drop for low pressure filters is max 0.5 bar.
If the medium used has a viscosity different from 32cSt, pressure drop over the filter can be estimated as follows:
Δp = (Δp32 x viscosity of medium used) / 32cSt.

ETF45 (Element length code 1)

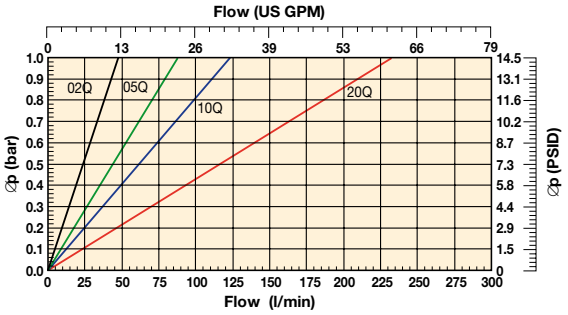

ETF60 (Element length code 2)

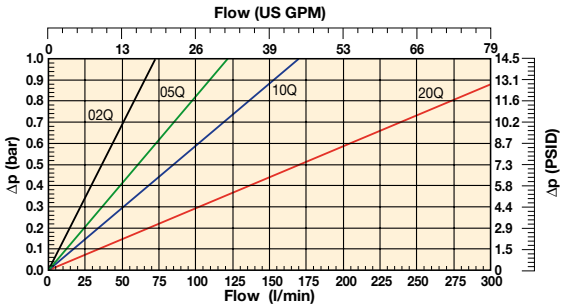

ETF90 (Element length code 3)

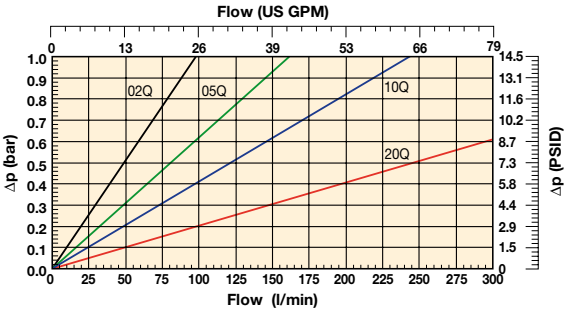

ETF120 (Element length code 4)

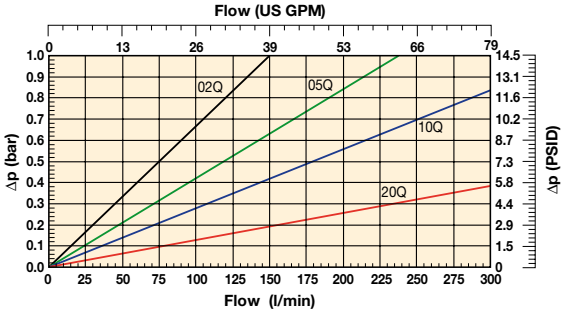

ETF140 (Element length code 4A)

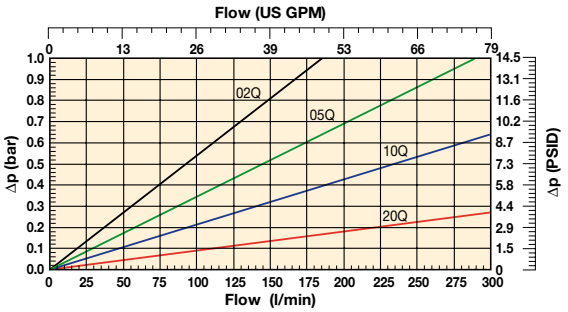

ETF175 (Element length code 4B)

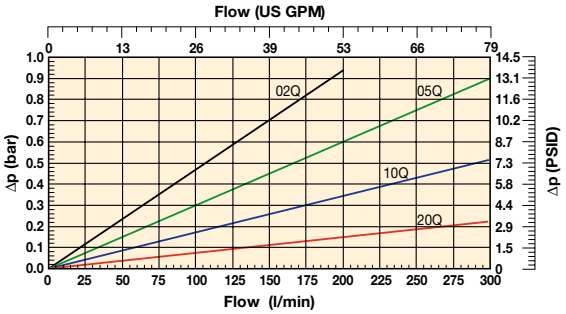

Note: All pressure drop curves above show total pressure drop. i.e. they are combined housing and element curves.

ETF Series

Tanktop Mounted Return Line Filters

Ordering Information

Standard products table

Part number	Supersedes	Flow (l/min)	Model number	Element length	Media rating (µ)	Seals	Indicator	Bypass settings	Ports	Included options	Replacement elements	Supersedes
ETF210QBP2FG164	FK1230.Q010.BK16.GX16	60	ETF60	Length 2	10	Nitrile	Plugged	1.6 Bar (23 Psi)	2xG1 (one port plugged)	Diffuser type P	**937950Q**	FC1230.Q010.XS
ETF220QBP2FG164	FK1230.Q020.BK16.GX16	60	ETF60	Length 2	20	Nitrile	Plugged	1.6 Bar (23 Psi)	2xG1 (one port plugged)	Diffuser type P	**937951Q**	FC1230.Q020.XS
ETF310QBP2FG164	FK1240.Q010.BK16.GX16	90	ETF90	Length 3	10	Nitrile	Plugged	1.6 Bar (23 Psi)	2xG1 (one port plugged)	Diffuser type P	**937952Q**	FC1240.Q010.XS
ETF320QBP2FG164	FK1240.Q020.BK16.GX16	90	ETF90	Length 3	20	Nitrile	Plugged	1.6 Bar (23 Psi)	2xG1 (one port plugged)	Diffuser type P	**937953Q**	FC1240.Q020.XS

Note: Filter assemblies ordered from the product configurator below are on extended lead times. Where possible, please make your selection from the table above.

Product configurator

Configurator example of an ETF Series filter

Box 1	Box 2	Box 3	Box 4	Box 5	Box 6	Box 7	Box 8
ETF	**3**	**10Q**	**B**	**S2**	**F**	**G16**	**1**

Box 1

Code
ETF

Box 2

Filter type	
Housing	**Code**
ETF 1-45	1
ETF 1-60	**2**
ETF 1-90	**3**
ETF 1-120	4
ETF 1-140	**4A**
ETF 1-175	**4B**

Box 3

Degree of filtration				
	Glassfibre media			
	Microglass III (for disposable elements)			
Disposable element	02Q	05Q	**10Q**	**20Q**

Box 4

Seal type	
Seal material	**Code**
Nitrile	**B**

Box 5

Indicator	
	Code
Pressure gauge, setting 1.2 bar, G1/8	**G2**
Pressure switch 42V, 1.2 bar setting, NO with G1/8 BSP	**S2**
Pressure switch 42V, 1.2 bar setting, NC with G1/8 BSP	S3
Pressure switch 250V, 1.2 bar setting NO/NC with G1/8	S4
No indicator, indicator ports L + T plugged	**P2**
Other settings for indicators / gauges on request	on request

Box 6

Bypass valve	
Bypass valve	**Code**
1.6 bar	**F**
Other bypass settings	on request

Box 7

Filter connection	
Ports	**Code**
G1"(BSP) (2 ports, one supplied as plugged connection)	**G16**

Box 8

Options	
Options	**Code**
No diffuser required	1
Diffuser type P without perforated plate area	**4**
Diffuser with integrated hose connection	on request
Magnets	on request
Diffuser type P and magnets	on request
Other combinations	on request

Note: ETF filters are standard supplied without magnets and including diffuser type P

Spare elements table				
	02Q	**05Q**	**10Q**	**20Q**
ETF1-45	937969Q	937970Q	937948Q	937949Q
ETF1-60	937971Q	937972Q	937950Q	937951Q
ETF1-90	937973Q	937974Q	937952Q	937953Q
ETF1-120	937975Q	937976Q	937954Q	937955Q
ETF1-140	937977Q	937978Q	937956Q	937957Q
ETF1-175	937979Q	937980Q	937981Q	937982Q

Degree of filtration						Media code
Average filtration beta ratio ß (ISO 16889) / particle size µm [c]						
ßx(c)=2	ßx(c)=10	ßx(c)=75	ßx(c)=100	ßx(c)=200	ßx(c)=1000	
% efficiency, based on the above beta ratio (ßx)						
50.0%	**90.0%**	**98.7%**	**99.0%**	**99.5%**	**99.9%**	
N/A	N/A	N/A	N/A	N/A	4.5	**02Q**
N/A	N/A	4.5	5	6	7	**05Q**
N/A	6	8.5	9	10	12	**10Q**
6	11	17	18	20	22	**20Q**

ETF Series Seal Kit	
Part Number	**Description**
918045037	NITRILE SEAL KIT ETF 0 -4B

Highlights Key (Denotes part number availability)

123	Item is standard
123	Item is standard green option
123	Item is semi standard
123	Item is non standard

Note 1: Part numbers featured with bold highlighted codes will ensure a 'standard' product selection.
Note 2: Alternate displayed part number selection will require you to contact Parker Filtration for availability.

Tel: +45 63 12 83 00 | Email: ps@hymatik.com | www.hymatik.com | Hvidkaervej 27a, DK-5250 Odense SV, Denmark

TTF Series

Tanktop Mounted Return Line Filters
Max 500 l/min - 10 bar



Featuring pre-filtration by means of a magnetic column

Extended element life time

The TTF Series features pre-filtration by means of a magnet column and a quick response bypass with low hysteresis. Maximum pressure 10 bar. Maximum flow 500 l/min. A second return port is an available option as is a filling port in the filter cover.



Contact Information:

Parker Hannifin
Hydraulic Filter Division Europe

European Product Information Centre
Freephone: 00800 27 27 5374
(from AT, BE, CH, CZ, DE, EE, ES, FI, FR, IE, IT, PT, SE, SK, UK)
filtrationinfo@parker.com

www.parker.com/hfde

Product Features:

- TTF features pre-filtration by means of a magnet column.
- Quick response bypass with low hysteresis.
- Maximum pressure 10 bar. Maximum flow 500 l/min.
- Options include a filling port in the filter cover and second return port.
- Patented *LEIF*® elements safeguard filtration quality.
- Flow from inside to out.

TTF Series

Tanktop Mounted Return Line Filters

Features & Benefits

Features	Advantages	Benefits
10 bar rated filter	Can be utilised for severe return line applications	Reduced downtime due to premature filter failures
Cast aluminium head	Compact profile, lightweight and durable	Less weight, smaller envelop and cleaner appearance
LEIF® elements	Element safeguards the use of genuine parts	Guaranteed quality of filtration
		Contributes to ISO 14001 certification
Magnetic pre-filtration	Removes ferrous particles, even during bypass conditions	Improved fluid cleanliness levels
		Extended element life time
In-to-Out filtration	All captured contamination retains inside the element	No recontamination of system during change of elements
High level of customisation	Dedicated system-matched solutions can be easily made available	Improved integration of filter in system combined with lower initial system costs
Quick response bypass with low hysteresis	Reduction of bypass period due to low hysteresis	Improved protection of system
	Only a small part of the total flow is bypassing the element	
Standard or customised funnel	Ensures that oil enters the tank under the oil level	Significant reduction of oil foaming

Typical Applications

- Waste management trucks
- Mobile cranes
- Power packs
- Wheeled loaders
- Drilling equipment



The Parker Filtration TTF Series Return Line Filters

TTF tank top mounted return line filters feature pre-filtration by means of a magnet column and a quick response bypass with low hysteresis. Thanks to the “In-to-Out” filter principle, contaminated oil cannot leak back into the system. TTF filters are available in versions capable of handling flow rates up to 500 l/min. They can operate up to a maximum working pressure of 10 bar. Optional filling port in filter cover, second return port and customised diffusers can be specified.

Specification

Operation pressure:
Max. 10 bar.

Assembly:
Tank top mounted.

Connections:
Threaded BSP ports.
Flanged ports on request.

Filter housing:
Aluminium head and cover.

Seal material:
Nitrile, fluoroelastomer, neoprene.

Operation temperature range:
Seal material Nitrile: -40 to +100°C.
Seal material Fluoroelastomer: -20 to +120°C.

Bypass setting
Opening pressure 0.8 / 1.5 or 2 bar.
Other settings on request.

Degree of filtration:
Determined by multipass test according to ISO 16889.

Flow fatigue characteristics:
Filter media is supported so that the optimum fatigue life is achieved.

Filtration media:
Microglass III and Ecoglass III for *LEIF*® elements.
Also available 10µm cellulose and 40µm stainless steel mesh.

Element burst rating:
10 bar (ISO 2941)

Pressure indicator options:
Setting 0.7 or 1.2 bar.
Other settings on request.
Visual pressure gauge.
Electrical pressure switch.

Options:
Diffuser type P (straight pipe, no perforated plate area)
Diffuser type T (with closed diffuser end cap and with perforated plate area, recommended when oil entry in reservoir is close to the reservoir bottom or to ensure oil entry under the reservoir oil level)

Magnetic pack:
Standard. TTF400 and 500 are standard supplied without magnets

Filling port in cover: (optional)
Plugged.

Filter element:
LEIF® element with reusable metal element sleeve.
Optional conventional style element with steel end caps.
The *LEIF*® element is patented and safeguards the use of genuine parts.
Note: *LEIF*® element can be used with mineral and HEES type oils.
For other fluids consult Parker Filtration.
LEIF® contributes to ISO 14001 quality standards.

TTF

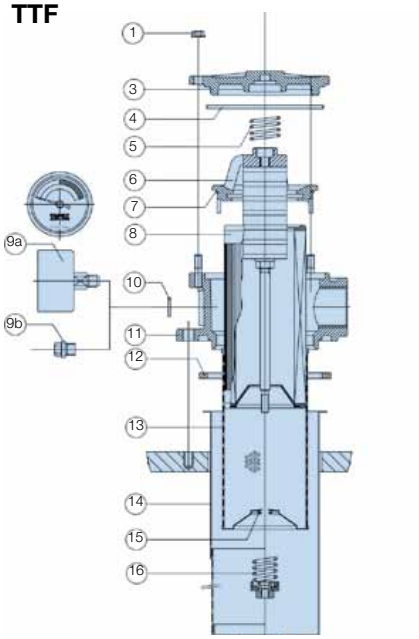

TTF sealkit: No. 4+7+12		
Ref.	**No.**	**Description**
1	4	Flange nut
3	1	Cover
4	1	Cover-seal
5	1	Top-spring
6	1	Insert
7	1	Insert-seal
8	1	Element
9a	0-1	Indicator
9b	0-3	Plug M10x1
10	0-3	Unit-ring
11	1	Housing
12	1	Gasket
13	1	Sleeve
14	1	Funnel/diffuser
15	1	O-ring
16	1	Bypass set

TTF Series

Tanktop Mounted Return Line Filters

TTF Lengths 2-5 Single port

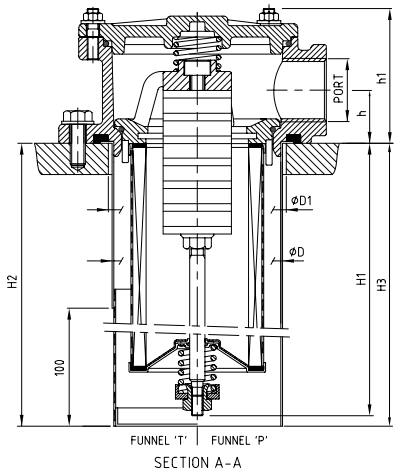

SECTION A-A

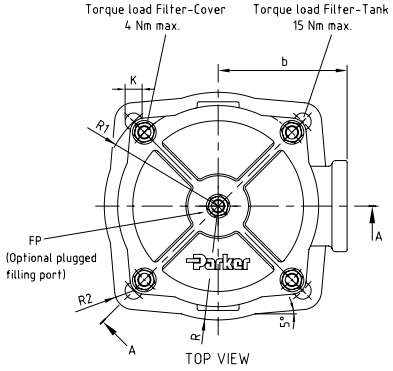

TTF length	Type	Port option	h	h1	ØD	ØD1	H1	H2	H3	b	R	R1	R2	K	FP
2	TTF 1-60	G¾, G1	28	73	Ø90	Ø93	131	190	190	68	60	63	10	4xØ9	G½
3	TTF 1-90						175	190	190						
4	TTF 1-120						225	330	330						
5	TTF 1-150						325	420	420						

Dimensions in mm

TTF Lengths 6-10 Single port

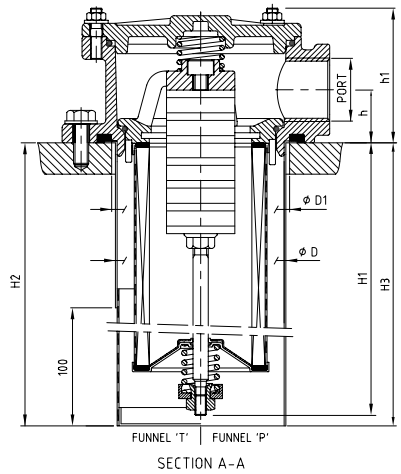

SECTION A-A

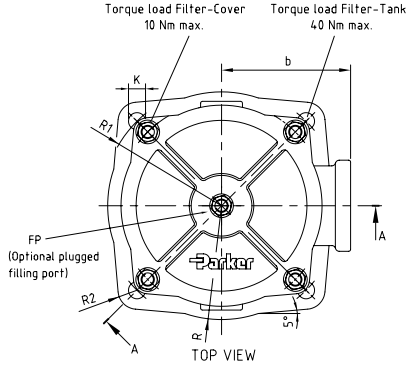

TTF length	Type	Port option	h	h1	ØD	ØD1	H1	H2	H3	b	R	R1	R2	K	FP
6	TTF 2-170	G1¼, G1½	36	92	Ø132	Ø136	223	305	305	90	83	87.5	12	4xØ11	G¾
7	TTF 2-230						303	305	305						
8	TTF 2-300						508	510	510						
9	TTF 2-400						523	525	525						
10	TTF 2-500						563	575	575						

Dimensions in mm

TTF Lengths 2-5 Dual port

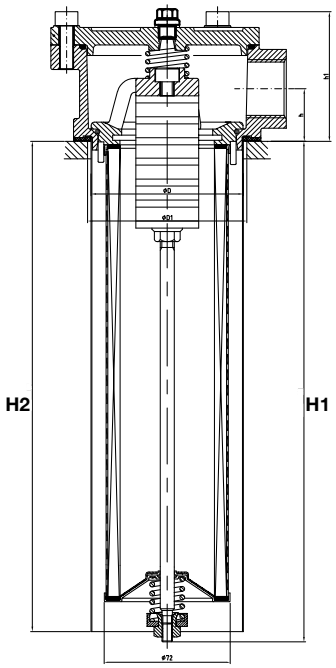

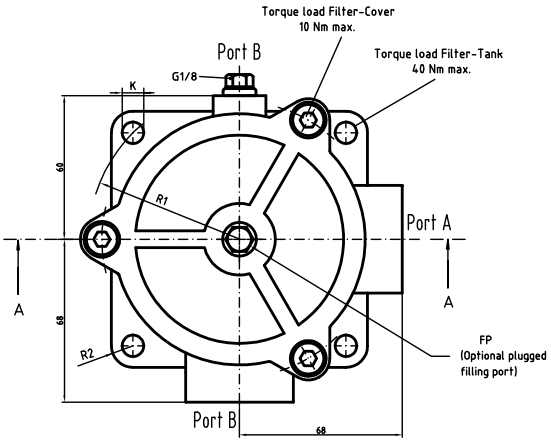

TTF length	Type	Port option A - B	h	h1	ØD	ØD1	H1	H2	b	R	R1	R2	K	FP
2	TTF 1-60	G1 - G1	30	74	Ø88	Ø91	131	190	90	83	87.5	12	4xØ11	G1/8
3	TTF 1-90						175	170						
4	TTF 1-120						225	220						
4A	TTF 1-140						285	280						
5	TTF 1-150						325	320						
4B	TTF 1-175						376	370						

Dimensions in mm

TTF Lengths 6-10 Dual port

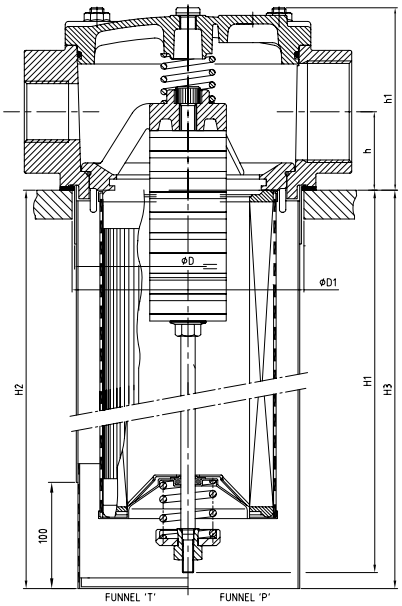

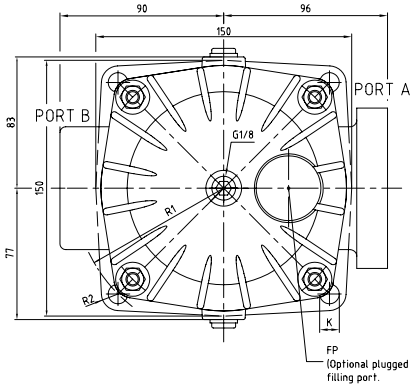

TTF length	Type	Dual Port option A-B	h	h1	ØD	ØD1	H1	H2	H3	R	R1	R2	K	FP
6	TTF 2-170	G1½ - G1½	46	107	Ø132	Ø136	223	318	318	83	87.5	12	4xØ11	G1
7	TTF 2-230						303	318	318					
8	TTF 2-300	G2 - G1½					508	538	538					
9**	TTF 2-400	SAE 1½ - G1½					523	538	538					
10**	TTF 2-500						563	578	578					

Dimensions in mm

Tel: +45 63 12 83 00 | Email: ps@hymatik.com | www.hymatik.com | Hvidkaervej 27a, DK-5250 Odense SV, Denmark

TTF Series

Tanktop Mounted Return Line Filters

Pressure Drop Curves

The recommended level of the initial pressure drop for low pressure filters is max 0.5 bar.
If the medium used has a viscosity different from 32cSt, pressure drop over the filter can be estimated as follows:
Δp = (Δp32 x viscosity of medium used) / 32cSt.

TTF60 (Element length code 2)

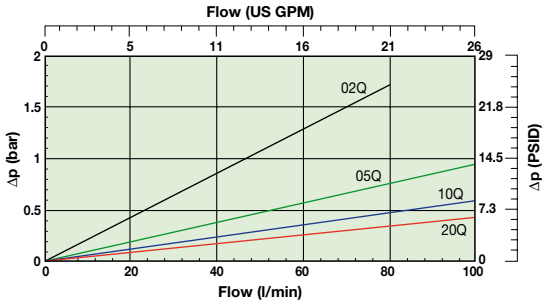

TTF90 (Element length code 3)

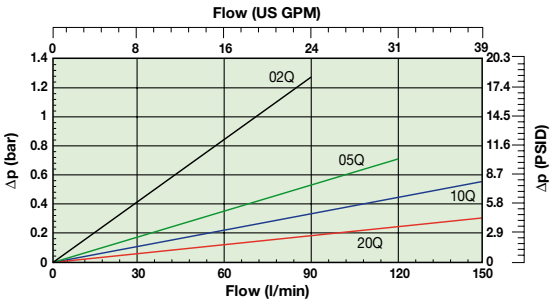

TTF120 (Element length code 4)

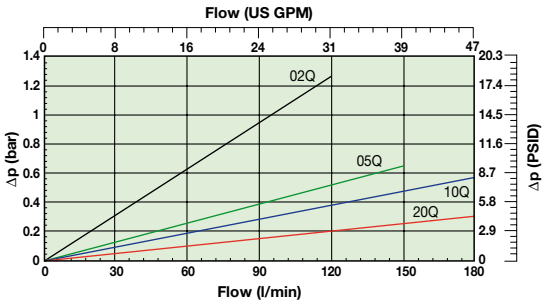

TTF150 (Element length code 5)

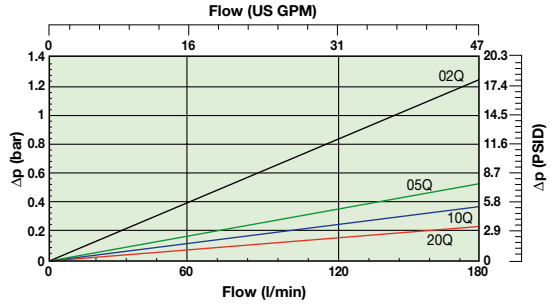

Pressure Drop Curves (cont.)

The recommended level of the initial pressure drop for low pressure filters is max 0.5 bar.
If the medium used has a viscosity different from 32cSt, pressure drop over the filter can be estimated as follows:
Δp = (Δp32 x viscosity of medium used) / 32cSt.

TTF170 (Element length code 6)

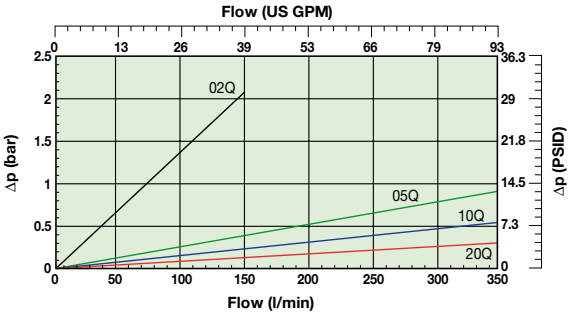

TTF230 (Element length code 7)

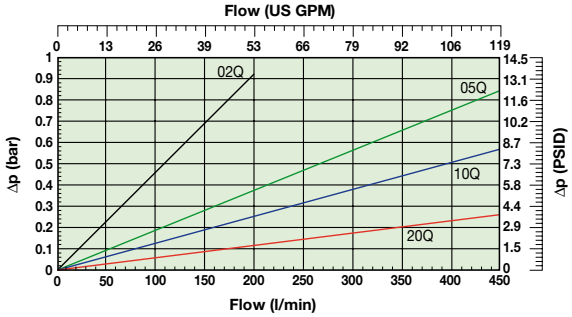

TTF300 (Element length code 8)

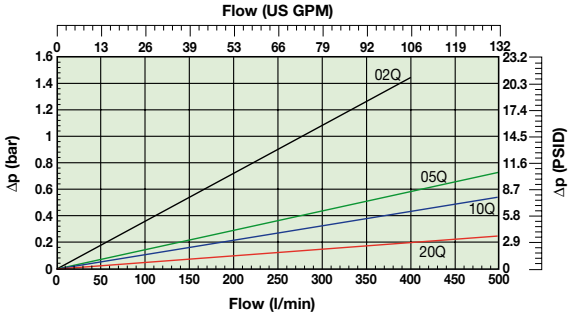

TTF400 (Element length code 9)

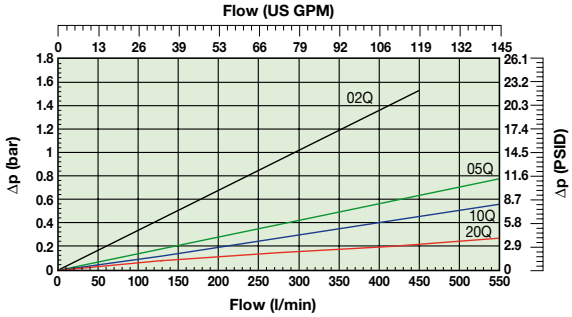

TTF500 (Element length code 10)

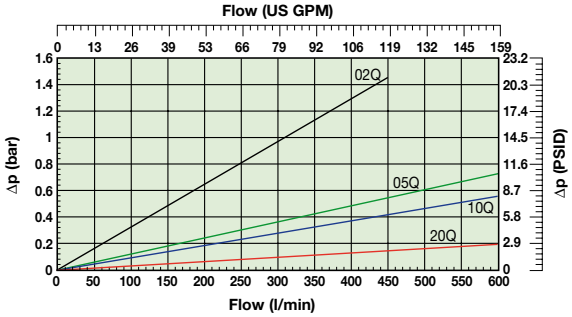

Tel: +45 63 12 83 00 | Email: ps@hymatik.com | www.hymatik.com | Hvidkaervej 27a, DK-5250 Odense SV, Denmark

TTF Series

Tanktop Mounted Return Line Filters

Pressure Drop Curves (cont.)

TTF60 (Element length code 2)
Cellulose & stainless steel media

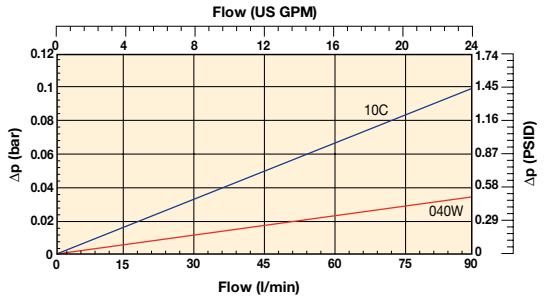

TTF90 (Element length code 3)
Cellulose & stainless steel media

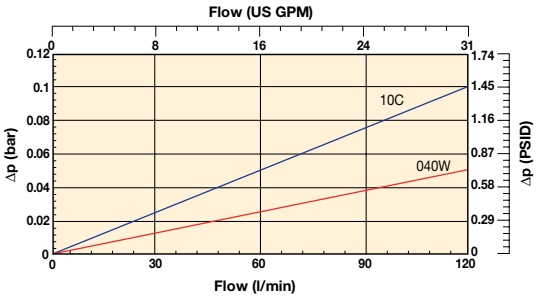

TTF120 (Element length code 4)
Cellulose & stainless steel media

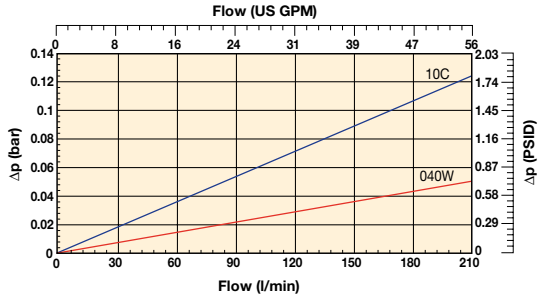

TTF150 (Element length code 5)
Cellulose & stainless steel media

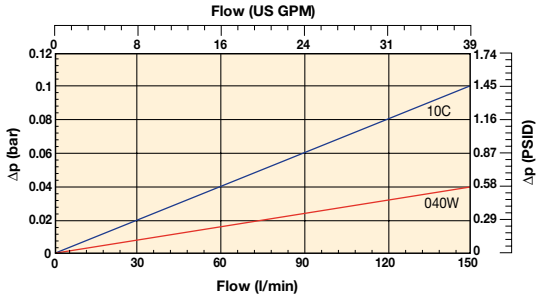

TTF170 (Element length code 6)
Cellulose & stainless steel media

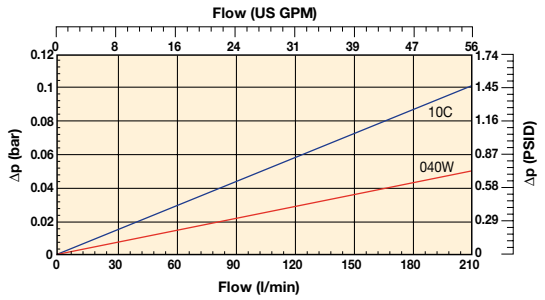

TTF230 (Element length code 7)
Cellulose & stainless steel media

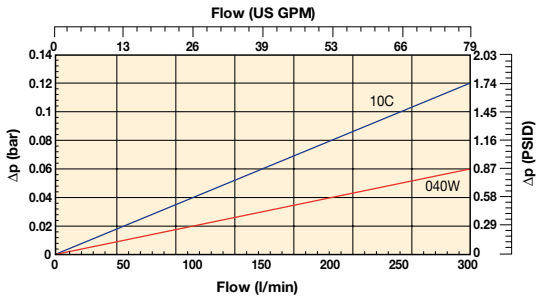

TTF300 (Element length code 8)
Cellulose & stainless steel media

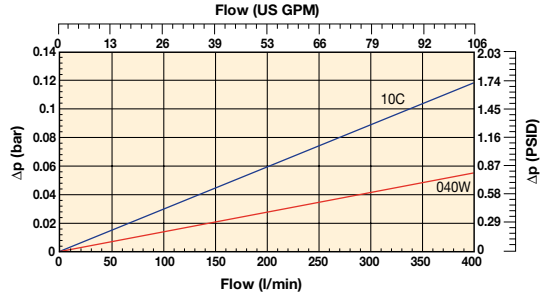

Tel: +45 63 12 83 00 | Email: ps@hymatik.com | www.hymatik.com | Hvidkaervej 27a, DK-5250 Odense SV, Denmark

TTF Series

Tanktop Mounted Return Line Filters

Indicator Options

Indicator PS pressure switch

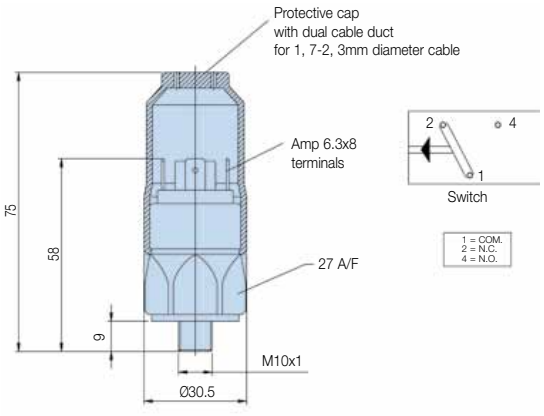

Specifications	
Elec.rating	42V / 4A
Thread connection	M10x1
Elec.connection	AMP 6.3x0.8 terminals + protective cap
Protection	IP65 (with cap) terminals IP00
Code	FMUS1EBMM10L (Switch)

Indicator Connection / Filter Head Matrix		
	Port(s) Filter head	**Indicator Thread**
TTF	ISO 228-G3/4" (BSP) (TTF length 2,3,4 and 5)	M10
	ISO 228-G1" (BSP)	M10
	ISO 228-G1 1/4" (BSP) (TTF length 6 and larger)	M10
	2xISO 228-G1 1/4" (BSP) (TTF length 6 and larger)	G1/8"
	ISO 228-G1 1/2"(BSP) (TTF length 6 and larger)	M10
	2xISO 228-G1 1/2"(BSP) (TTF length 6 and larger)	G1/8"
	1 1/2" SAE-3000 PSI (TTF length 6 and larger)	G1/8"
	1 1/2" SAE-3000 PSI (2nd port) + G1 1/2" (TTF length 6 and larger)	G1/8"
	G2" (TTF length 6 and larger)	G1/8"
	G2" + G1 1/2" (TTF length 6 and larger)	G1/8"

Indicator PS NO/NC pressure switch

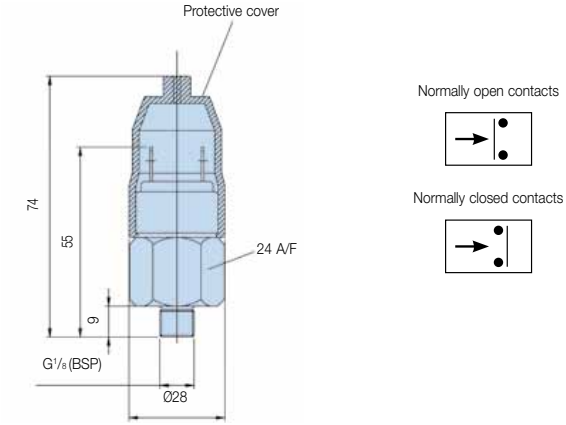

Specifications	
Elec.rating	42V / 2A
Thread connection	G1/8
Elec.connection	AMP terminal 6.3x0.8
Protection	IP65 (terminal IP00)
Switch type	NO or NC
Code	FMUS2EBMG02L (NO switch)
	FMUS3EBMG02L (NC switch)

Visual indicator	1.2 bar
M10: code	FMUG1EBPM10L
G1/8: code	FMUG2EBPG02L

Ordering Information

Standard products table

Part number	Supersedes	Flow (l/min)	Model number	Element length	Media rating (µ)	Seals	Indicator	Bypass settings	Ports	Included options	Replacement elements	Supersedes
TTF310QLBP2EG121	TTF90-G3/4 TXWL3-10 B15 MM	90	TTF90	Length 3	10	Nitrile	Plugged	1.5 Bar (22 Psi)	G3/4	None	**937878Q**	TXWL3-10
TTF320QLBP2EG121	TTF90-G3/4 TXWL3-20 B15 MM	90	TTF90	Length 3	20	Nitrile	Plugged	1.5 Bar (22 Psi)	G3/4	None	**937877Q**	TXWL3-20
TTF510QLBP2EG161	TTF125-G1 TXWL3E-10 B15 MM	125	TTF125	Length 5	10	Nitrile	Plugged	1.5 Bar (22 Psi)	G1	None	**937852Q**	TXWL3E-10
TTF520QLBP2EG161	TTF125-G1 TXWL3E-20 B15 MM	125	TTF125	Length 5	20	Nitrile	Plugged	1.5 Bar (22 Psi)	G1	None	**937875Q**	TXWL3E-20
TTF610QLBP2EG203	TTF170-G1 1/4 TXWL4-10 T B15 MM	170	TTF170	Length 6	10	Nitrile	Plugged	1.5 Bar (22 Psi)	G1 1/4	Diffuser type T	**937853Q**	TXWL4-10
TTF620QLBP2EG203	TTF170-G1 1/4 TXWL4-20 T B15 MM	170	TTF170	Length 6	20	Nitrile	Plugged	1.5 Bar (22 Psi)	G1 1/4	Diffuser type T	**937874Q**	TXWL4-20
TTF810QLBP2EG243	TTF300-G1 1/2 TXWL5A-10 T B15 MM	300	TTF300	Length 8	10	Nitrile	Plugged	1.5 Bar (22 Psi)	G1 1/2	Diffuser type T	**937855Q**	TXWL5A-10
TTF820QLBP2EG243	TTF300-G1 1/2 TXWL5A-20 T B15 MM	300	TTF300	Length 8	20	Nitrile	Plugged	1.5 Bar (22 Psi)	G1 1/2	Diffuser type T	**937872Q**	TXWL5A-20
TTF1010QLBP2EG24A	TTF500-G1 1/2 TXWL5C-10 T B15 MM NMG	500	TTF500	Length 10	10	Nitrile	Plugged	1.5 Bar (22 Psi)	G1 1/2	Diffuser type T	**937857Q**	TXWL5C-10
TTF1020QLBP2EG24A	TTF500-G1 1/2 TXWL5C-20 T B15 MM NMG	500	TTF500	Length 10	20	Nitrile	Plugged	1.5 Bar (22 Psi)	G1 1/2	Diffuser type T	**937870Q**	TXWL5C-20

Note: Filter assemblies ordered from the product configurator on the next page are on extended lead times. Where possible, please make your selection from the table above.

Tel: +45 63 12 83 00 | Email: ps@hymatik.com | www.hymatik.com | Hvidkaervej 27a, DK-5250 Odense SV, Denmark

TTF Series

Tanktop Mounted Return Line Filters

Ordering Information (cont.)

Product configurator
Configurator example of a TTF Series filter

Box 1	Box 2	Box 3	Box 4	Box 5	Box 6	Box 7	Box 8
TTF	**9**	**05QL**	**V**	**S3**	**H**	**L24**	**1**

Box 1

Code
TTF

Box 2

Filter type	
Housing	**Code**
TTF 1-60	2
TTF 1-90	**3**
TTF 1-120	4
TTF 1-140	4A
TTF 1-175	4B
TTF 1-150	**5**
TTF 2-170	**6**
TTF 2-230	7
TTF 2-300	**8**
TTF 2-400	**9**
TTF 2-500	**10**

Box 3

Degree of filtration						
Element media		**Glass fibre**				
		Microglass III (for disposable elements)				
	Cellulose	Ecoglass III (for *Leif*® elements)				**Wire mesh**
	Nom. rating					Abs. rating
Disposable element	10C	02Q	05Q	**10Q**	**20Q**	040W
***LEIF*® element**		02QL	**05QL**	**10QL**	**20QL**	

Box 4

Seal type	
Seal material	**Code**
Nitrile	**B**
Fluorelastomer	V
Neoprene	On request

Box 5

Indicator	
	Code
Pressure gauge, setting 1.2 bar, M10x1*	**G1**
Pressure gauge, setting 1.2 bar, G1/8 for dual head ports	G2
Pressure switch 42V, 1.2 bar setting, NO/NC, M10x1*	**S1**
Pressure switch 42V, 1.2 bar setting, NO with G1/8 BSP*	S2
Pressure switch 42V, 1.2 bar setting, NC with G1/8 BSP*	S3
Pressure switch 250V, NO/NC with G1/8*	S4
Pressure switch 220V, NO/NC with M10*	S5
No indicator, indicator ports not machined	On request
No indicator, indicator ports L + R plugged	**P2**
Other settings for indicators / gauges on request	on request

Note: * HEAD HAS PLUGGED INDICATOR CONNECTIONS L+R
Note: Also see the table indicator Connection/Filter Head Matrix on page 29

Box 6

Bypass valve	
Bypass valve	**Code**
0.8 bar	B
1.5 bar	**E**
2.0 bar for TTF series	H
Blocked bypass	X
Other bypass settings	on request

Box 7

Filter connection	
Ports	**Code**
ISO 228-G3/4" (BSP) (TTF length 2,3,4 and 5)	**G12**
ISO 228-G1" (BSP) (TTF length 2,3,4 and 5)	**G16**
ISO 228-G1 1/4" (BSP) (TTF length 6 and larger)	**G20**
ISO 228-G1 1/2" (BSP) (TTF length 6 and larger)	**G24**
2xISO 228-G1 1/2" (BSP) (TTF length 6 and larger)	2G24
1 1/2" SAE-3000 PSI (TTF length 6 and larger)	On request
1 1/2" SAE-3000 PSI (2nd port) + G1 1/2" (TTF length 6 and larger)	LD24
G2" (TTF length 6 and larger)	On request
G2" + G1 1/2" (TTF length 6 and larger)	GM32

Box 8

Options	
Options	**Code**
No diffuser required	**1**
Diffuser type T with perforated plate area	**3**
Diffuser type P without perforated plate area	4
Funnel with integrated hose connection for TTF lengths 2, 3 and 4	On request
No magnets	5
Plugged filling port	8
Diffuser type T and no magnets	**A**
Diffuser type P and no magnets	B
Diffuser type T, no magnets, plugged filling port	C
Diffuser type P, no magnets, plugged filling port	D
Air tight diffuser type T	G
Air tight diffuser type P	H
Other combinations	on request
ATEX certified* (Category 2, non-electrical equipment)	EX

Note 1: TTF size 2-400 and 2-500 are standard supplied without magnets.
Note 2*: For ATEX classified filters add EX after the code.
For ATEX classified filters with electrical indicator are available on request.
Visual indicators are classified as Category 2, non electrical equipment.
Filter assemblies with EX code will be supplied with a dedicated name plate.
Pls consult Parker Filtration for any questions related to the classification of our products.

Degree of filtration						Media code
Average filtration beta ratio ß (ISO 16889) / particle size µm [c]						
ßx(c)=2	**ßx(c)=10**	**ßx(c)=75**	**ßx(c)=100**	**ßx(c)=200**	**ßx(c)=1000**	
% efficiency, based on the above beta ratio (ßx)						
50.0%	**90.0%**	**98.7%**	**99.0%**	**99.5%**	**99.9%**	
N/A	N/A	N/A	N/A	N/A	4.5	**02Q/02QL**
N/A	N/A	4.5	5	6	7	**05Q/05QL**
N/A	6	8.5	9	10	12	**10Q/10QL**
6	11	17	18	20	22	**20Q/20QL**

Highlights Key (Denotes part number availability)

123	Item is standard
123	Item is standard green option
123	Item is semi standard
123	Item is non standard

Parker Hannifin
Hydraulic Filter Division Europe
FDHB500UK/TTF

Ordering Information (cont.)

Supersedes Spare Element table (TXWL & PXWL replaced by 900000 number)				
TTF60	TXWL2-2	TXWL2-5	TXWL2-10	TXWL2-20
Part number spare element	937823Q	937880Q	937881Q	937882Q
TTF90	TXWL3-2	TXWL3-5	TXWL3-10	TXWL3-20
Part number spare element	937824Q	937879Q	937878Q	937877Q
TTF120	TXWL3D-2	TXWL3D-5	TXWL3D-10	TXWL3D-20
Part number spare element	937825Q	937850Q	937851Q	937876Q
TTF150	TXWL3E-2	TXWL3E-5	TXWL3E-10	TXWL3E-20
Part number spare element	937826Q	937849Q	937852Q	937875Q
TTF170	TXWL4-2	TXWL4-5	TXWL4-10	TXWL4-20
Part number spare element	937827Q	937848Q	937853Q	937874Q
TTF230	TXWL5-2	TXWL5-5	TXWL5-10	TXWL5-20
Part number spare element	937828Q	937847Q	937854Q	937873Q
TTF300	TXWL5A-2	TXWL5A-5	TXWL5A-10	TXWL5A-20
Part number spare element	937829Q	937846Q	937855Q	937872Q
TTF400	TXWL5B-2	TXWL5B-5	TXWL5B-10	TXWL5B-20
Part number spare element	937830Q	937845Q	937856Q	937871Q
TTF500	TXWL5C-2	TXWL5C-5	TXWL5C-10	TXWL5C-20
Part number spare element	937831Q	937844Q	937857Q	937870Q

Supersedes Spare Element table (TXW & TXX replaced by 900000 number)						
TTF60	TXX2-10-B	TXW2-2-B	TXW2-5-B	TXW2-10-B	TXW2-20-B	ST2-40-B
Part number spare element	937721	937751Q	937754Q	937787Q	937790Q	937820
TTF90	TXX3-10-B	TXW3-2-B	TXW3-5-B	TXW3-10-B	TXW3-20-B	ST3-40-B
Part number spare element	937722	937750Q	937755Q	937786Q	937791Q	937819
TTF120	TXX3D-10-B	TXW3D-2-B	TXW3D-5-B	TXW3D-10-B	TXW3D-20-B	ST3D-40-B
Part number spare element	937723	937749Q	937756Q	937785Q	937792Q	937818
TTF140	FC1260.C010.BS	FC1260.Q002.XS	FC1260.Q005.XS	FC1260.Q010.XS	FC1260.Q020.XS	
Part number spare element	1180309260-01	937977Q	937978Q	937956Q	937957Q	
TTF150	TXX3E-10-B	TXW3E-2-B	TXW3E-5-B	TXW3E-10-B	TXW3E-20-B	ST3E-40-B
Part number spare element	937724	937748Q	937757Q	937784Q	937793Q	937817
TTF170	TXX4-10-B	TXW4-2-B	TXW4-5-B	TXW4-10-B	TXW4-20-B	ST4-40-B
Part number spare element	937725	937747Q	937758Q	937783Q	937794Q	937816
TTF175		FC1275.Q002.XS	FC1275.Q005.XS	FC1275.Q010.XS	FC1260.Q020.XS	
Part number spare element		937979Q	937980Q	937981Q	937982Q	
TTF230	TXX5-10-B	TXW5-2-B	TXW5-5-B	TXW5-10-B	TXW5-20-B	ST5-40-B
Part number spare element	937726	937746Q	937759Q	937782Q	937795Q	937815
TTF300	TXX5A-10-B	TXW5A-2-B	TXW5A-5-B	TXW5A-10-B	TXW5A-20-B	ST5A-40-B
Part number spare element	937727	937745Q	937760Q	937781Q	937796Q	937814

TTF Series Seal Kit

TTF Filter connections	Nitrile Seal Kit
Ports	**Part Number**
ISO 228-G¾" (BSP) (TTF length 2,3,4 and 5)	**2049010012**
ISO 228-G1" (BSP) (TTF length 2,3,4 and 5)	**2049010012**
ISO 228-G1¼" (BSP) (TTF length 6 and larger)	**2049010013**
2xISO 228-G1¼" (BSP) (TTF length 6 and larger)	**918045035**
ISO 228-G1½" (BSP) (TTF length 6 and larger)	**2049010013**
2xISO 228-G1½" (BSP) (TTF length 6 and larger)	**918045035**
1½" SAE-3000 PSI (TTF length 6 and larger)	**918045035**
1½" SAE-3000 PSI (2nd port) + G1½" (TTF length 6 and larger)	**918045035**
G2" (TTF length 6 and larger)	**918045035**
G2" + G1½" (TTF length 6 and larger)	**918045035**

Tel: +45 63 12 83 00 | Email: ps@hymatik.com | www.hymatik.com | Hvidkaervej 27a, DK-5250 Odense SV, Denmark

Notes

Parker Hannifin
Hydraulic Filter Division Europe
FDHB500UK/TTF

Tel: +45 63 12 83 00 | Email: ps@hymatik.com | www.hymatik.com | Hvidkaervej 27a, DK-5250 Odense SV, Denmark

STF Series

Return Line Filters
Max. 500 l/min - 10 bar



When safety is an essential requirement

Where the use of aluminium is restricted in applications such as marine and industrial, the STF return line filter series provides an ideal solution to hydraulic system designers and specifiers.



Contact Information:

Parker Hannifin
Hydraulic Filter Division Europe

European Product Information Centre
Freephone: 00800 27 27 5374
(from AT, BE, CH, CZ, DE, EE, ES, FI, FR, IE, IT, PT, SE, SK, UK)
filtrationinfo@parker.com

www.parker.com/hfde

Product Features:

- 'In-to-out' filtration design means contaminated oil cannot leak back into the system.
- Magnetic pre-filtration.
- Cast iron filter head assembly
- Multiple port configuration.
- Flows up to 500 L/min.
- 10 bar maximum working pressure.
- Optional airtight diffusers.
- *LEIF*® low enviromental impact filter elements as standard.

Tel: +45 63 12 83 00 | Email: ps@hymatik.com | www.hymatik.com | Hvidkaervej 27a, DK-5250 Odense SV, Denmark

STF Series
Return Line Filters

Features & Benefits

Features	Advantages	Benefits
10 bar rated filter	Can be utilised for severe return line applications	Reduced downtime due to premature filter failures
Cast iron head	Robust design	Convenient and effective solution for applications where aluminium is not allowed
LEIF® elements	Element safeguards the use of genuine parts	Guaranteed quality of filtration
		Contributes to ISO 14001 certification
Magnetic pre-filtration	Removes ferrous particles, even during bypass conditions	Improved fluid cleanliness levels
		Extended element life time
In-to-Out filtration	All captured contamination retains inside the element	No recontamination of system during change of elements
High level of customisation	Dedicated system-matched solutions can be easily made available	Improved integration of filter in system combined with lower initial system costs
Quick response bypass with low hysteresis	Reduction of bypass period due to low hysteresis	Improved protection of system
	Only a small part of the total flow is bypassing the element	
Standard or customised funnel	Ensures that oil enters the tank under the oil level	Significant reduction of oil foaming

Typical Applications

- Marine power pack
- Steel mills
- Mining equipment
- Drilling equipment

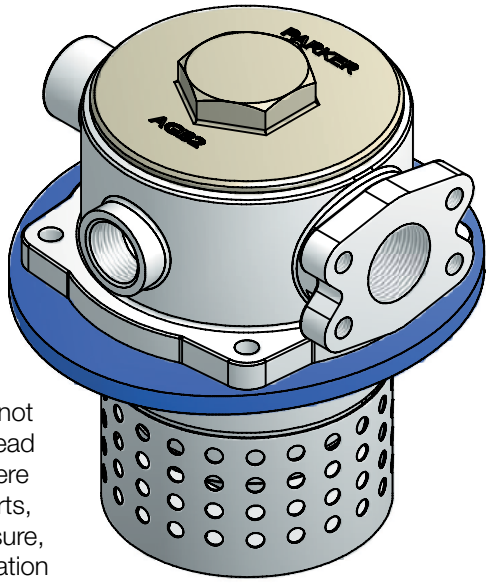

The Parker Filtration STF Series Return Line Filters

STF Tank top mounted return filters feature pre-filtration by means of a magnet column and a bypass with low hysteresis. Thanks to the “In-to-Out” filtration principle, contaminated oil cannot leak back into the system. The STF filter has a casted iron filter head assembly, making it ideal for marine and industrial applications were the use of aluminium is restricted. The filter head with multiple ports, capable of handling flow up to 500 l/min at 10 bar working pressure, represents an easy and effective way of integrating return line filtration with power packs. Optional airtight diffusers are standard to avoid air ingress in the return line.

Specification

Operation pressure:
Max. 10 bar

Assembly
Tank top mounted

Connections
SAE flange
Threaded BSP ports

Filter housing and cover
Cast Iron (GGG40)

Seal material:
Nitrile, Fluorelastomer

Operating temperature:
Seal material Nitrile: -40°C to +100°C
Seal material Fluoroelastomer: -20°C to +120°C

Bypass setting
Opening pressure 0,8 / 1,5 / 2,0 bar

Degree of filtration
Determined by multipass test in accordance to ISO16889

Flow fatigue characteristics
Filter media is supported so that the optimum fatigue life is achieved

Filtration media
Microglass III and Ecoglass III for *LEIF*® elements
Also available 10 µm cellulose and 40 µm stainless steel mesh

Element burst pressure
10 bar (ISO 2941)

Pressure indicator options
Setting 0,7 and 1,2 bar
Visual pressure gauge
Electrical pressure switch

Options
Diffuser type P (straight pipe, no perforated plate area)
Diffuser type T (with closed diffuser end cap and with perforated plate area, recommended when oil entry in the reservoir is close to the bottom or to ensure oil enters the reservoir under the oil level

Magnetic pack
Standard, only not included for STF 400 and 500

Filter element
LEIF® element with reusable metal element sleeve
Optional conventional style element with steel end caps
The *LEIF*® element is patented and safeguards the use of genuine parts.
Note:
LEIF® element can be used with mineral and HEES type oils
For other fluids consult Parker Filtration
LEIF® element contributes to ISO14001 quality standards

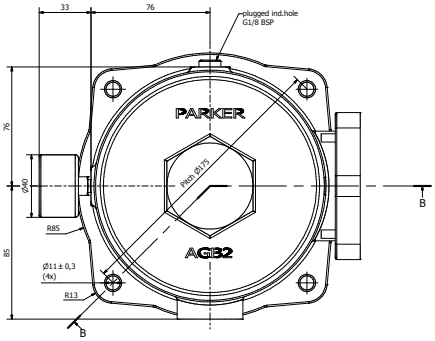

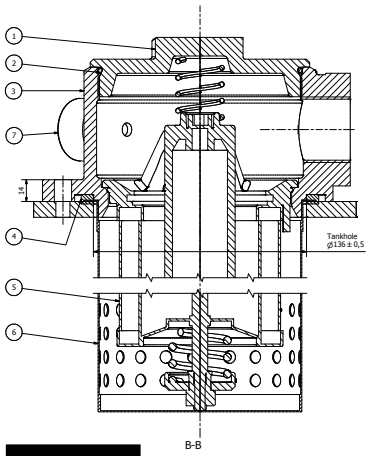

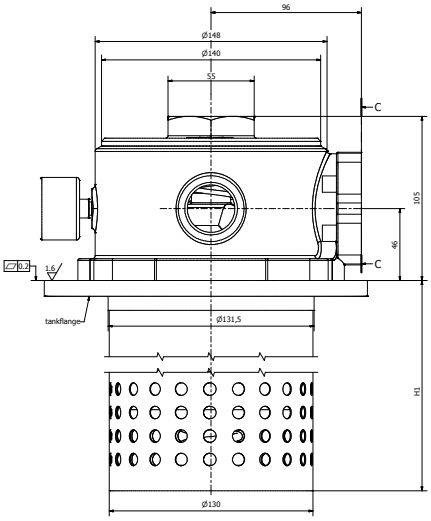

STF Without Diffuser		
STF Length	**Type**	**H1**
6	STF170	223
7	STF230	303
8	STF300	508
9	STF400	523
10	STF500	563

STF With Diffuser		
STF Length	**Type**	**H1**
6	STF170	305
7	STF230	305
8	STF300	510
9	STF400	525
10	STF500	575

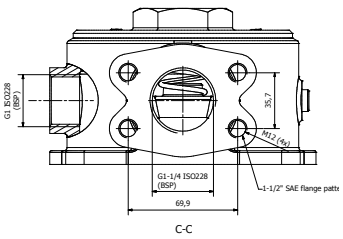

Parker Hannifin
Hydraulic Filter Division Europe
FDHB500UK/STF

STF Series
Return Line Filters

Pressure Drop Curves

The recommended level of the initial pressure drop for low pressure filters is max 0.5 bar.
If the medium used has a viscosity different from 32cSt, pressure drop over the filter can be estimated as follows:
Δp = (Δp32 x viscosity of medium used) / 32cSt.

STF170 (Element length code 6)

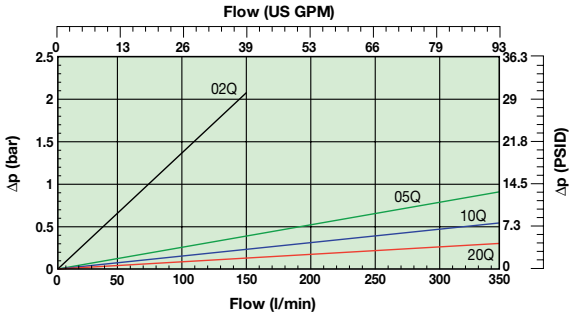

STF230 (Element length code 7)

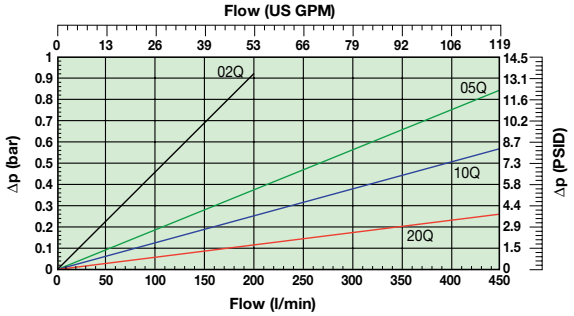

STF300 (Element length code 8)

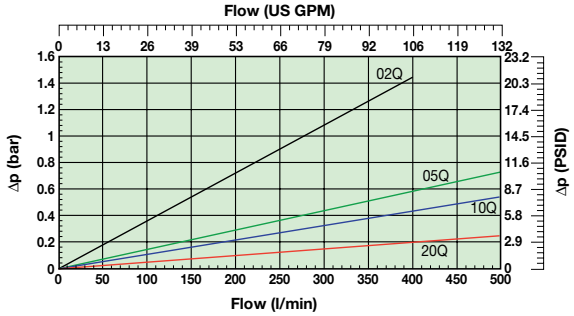

STF400 (Element length code 9)

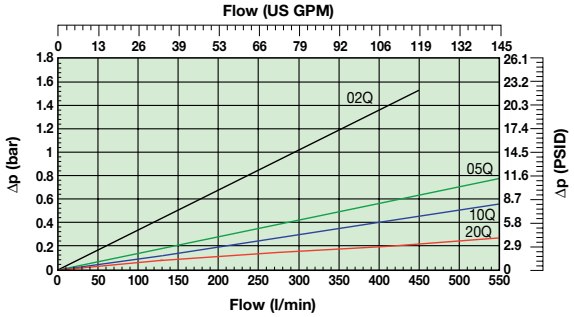

STF500 (Element length code 10)

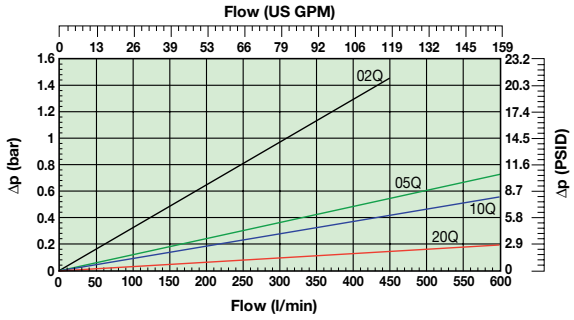

STF170 (Element length code 6)
Cellulose & stainless steel media

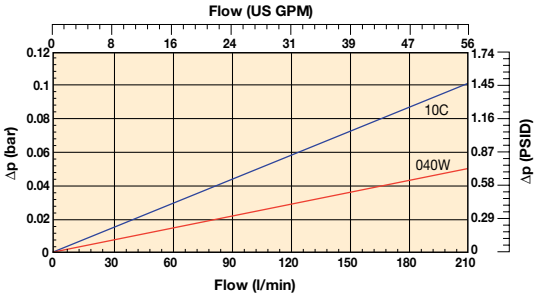

STF230 (Element length code 7)
Cellulose & stainless steel media

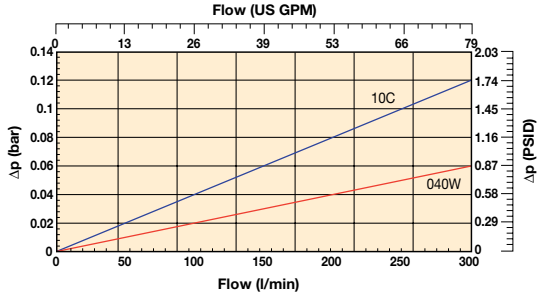

STF300 (Element length code 8)
Cellulose & stainless steel media

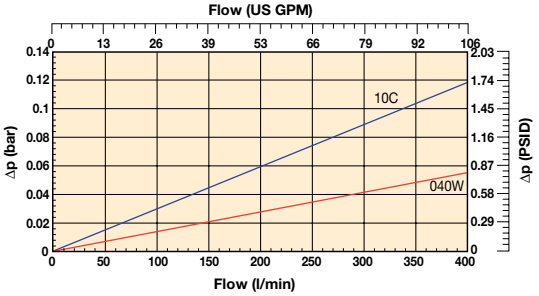

Tel: +45 63 12 83 00 | Email: ps@hymatik.com | www.hymatik.com | Hvidkaervej 27a, DK-5250 Odense SV, Denmark

STF Series
Return Line Filters

Indicator PS NO/NC pressure switch

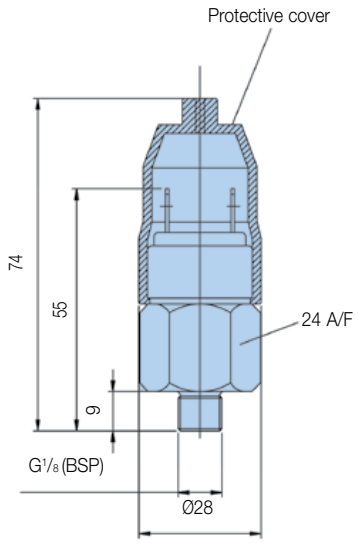

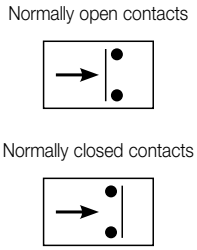

Specifications	
Electrical rating	42V / 2A
Thread connection	G1/8"
Electrical connection	AMP terminal 6.3x0.8
Protection	IP65 (terminal IP00)
Switch type	NO or NC
Indicator setting	1.2 bar (0.7 bar on request)
Code	FMUS2EBMG02L (NO type switch)
	FMUS3EBMG02L (NC type switch)

Visual indicator	Code
1.2 bar	FMUG2EBPG02L

LEIF Spare Element table				
	2 micron	5 micron	10 micron	20 micron
STF170 Part number spare element	937827Q	937848Q	937853Q	937874Q
STF230 Part number spare element	937828Q	937847Q	937854Q	937873Q
STF300 Part number spare element	937829Q	937846Q	937855Q	937872Q
STF400 Part number spare element	937830Q	937845Q	937856Q	937871Q
STF500 Part number spare element	937831Q	937844Q	937857Q	937870Q

Conventional Spare Element table Microglass III Media						
	10 micron cellulose	2µ Microglass III	5µ Microglass III	10µ Microglass III	20µ Microglass III	40 micron stainless steel mesh
STF170 Part number spare element	937725	937747Q	937758Q	937783Q	937794Q	937816
STF230 Part number spare element	937726	937746Q	937759Q	937782Q	937795Q	937815
STF300 Part number spare element	937727	937745Q	937760Q	937781Q	937796Q	937814

Tel: +45 63 12 83 00 | Email: ps@hymatik.com | www.hymatik.com | Hvidkaervej 27a, DK-5250 Odense SV, Denmark

Ordering Information

Standard products table

Part Number	Flow (l/min)	Model Number	Element Length	Media Rating (u)	Seals	Indicator	Bypass Setting	Ports	Included Options	Replacement Elements
STF810QLBP2ELC24G	300	STF300	8	10	Nitrile	Plugged	1.5 Bar	11/2"SAE-flange	Airtight funnel typeT	**937855Q**
STF820QLBP2ELC24G	300	STF300	8	20	Nitrile	Plugged	1.5 Bar	11/2"SAE-flange	Airtight funnel typeT	**937872Q**
STF1010QLBP2ELC24G	500	STF500	10	10	Nitrile	Plugged	1.5 Bar	11/2"SAE-flange	Airtight funnel typeT	**937857Q**
STF1020QLBP2ELC24G	500	STF500	10	20	Nitrile	Plugged	1.5 Bar	11/2"SAE-flange	Airtight funnel typeT	**937870Q**

Product configurator
Configurator example of a STF Series filter

Box 1	Box 2	Box 3	Box 4	Box 5	Box 6	Box 7	Box 8
STF	**8**	**05QL**	**B**	**S2**	**E**	**LC24**	**G**

Box 1

Code
STF

Box 2

Filter type	
Housing	**Code**
STF 2-170	6
STF 2-230	7
STF 2-300	**8**
STF 2-400	9
STF 2-500	**10**

Box 3

Degree of filtration						
Element media	Nominal	Filtration fineness absolute				
	Cellulose	***LEIF*®**				**Stainless steel mesh**
		Q3 glassfibre ßx(c) >200				
	10µm	Q02 (2micron)	Q05 (5micron)	Q010 (10micron)	Q020 (20micron)	40µm
Disposable element	10C	02Q	05Q	**10Q**	**20Q**	040W
***LEIF*® element**		**02QL**	**05QL**	**10QL**	**20QL**	

Box 4

Seal type	
Seal material	**Code**
Nitrile	**B**
Fluorelastomer	V

Box 5

Indicator	
	Code
Pressure gauge , setting 1.2 bar, G1/8	G2
Pressure switch 42V, 1.2 bar setting, NO with G1/8 BSP	S2
Pressure switch 42V, 1.2 bar setting, NC with G1/8 BSP	S3
Pressure switch 250V, NO/NC with G1/8	S4
No indicator, indicator ports L + R plugged	**P2**
Other settings for indicators / gauges on request	on request

Box 6

Bypass valve	
Bypass valve	**Code**
0.8 bar	B
1.5 bar	**E**
2.0 bar for STF series	H
Blocked bypass	X
Other bypass settings	on request

Box 7

Filter connection	
Ports	**Code**
1½" SAE-3000 M (G1¼" inside) + G1 (2nd port)	**LC24**
G1½" + G1" (2nd port)	GL24

Box 8

Options	
Options	**Code**
No diffuser required	1
Diffuser type T with perforated plate area	3
Diffuser type P without perforated plate area	4
Airtight diffuser type T with perforated plate area	**G**
Airtight diffuser type P without perforated plate area	H
Other combinations	on request
ATEX certified* (Category 2, non-electrical equipment)	EX

Note 1: STF size 2-400 and 2-500 are standard supplied without magnets
Note 2*:For ATEX classified filters add EX after the code.
ATEX certified filters with electrical indicator are available on request.
Visual indicators are classified as Category 2, non electrical equipment.
Filter assemblies with EX code will be supplied with a dedicated name plate.
Pls consult Parker Filtration for any questions related to the classification of our products.

Degree of filtration						Media code
Average filtration beta ratio ß (ISO 16889) / particle size µm [c]						
ßx(c)=2	**ßx(c)=10**	**ßx(c)=75**	**ßx(c)=100**	**ßx(c)=200**	**ßx(c)=1000**	
% efficiency, based on the above beta ratio (ßx)						
50.0%	**90.0%**	**98.7%**	**99.0%**	**99.5%**	**99.9%**	
N/A	N/A	N/A	N/A	N/A	4.5	**02Q/02QL**
N/A	N/A	4.5	5	6	7	**05Q/05QL**
N/A	6	8.5	9	10	12	**10Q/10QL**
6	11	17	18	20	22	**20Q/20QL**

Highlights Key (Denotes part number availability)

123	Item is standard
123	Item is standard green option
123	Item is semi standard
123	Item is non standard

STF Series Seal Kit	
Part number	**Description**
2049010076	NITRILE SEAL KIT STF

BGT Series

Tanktop Mounted Return Line Filters
Max. 2400 l/min - 10 bar



Patented *LEIF®* elements safeguard filtration quality

When high flow performance is needed

The BGT Series features pre-filtration by means of a magnet column and a full flow bypass with low hysteresis. Maximum pressure 10 bar. Maximum flow 2400 l/min. *LEIF®* elements available up to 1500 l/min. Designed for a wide range of mobile and industrial applications



Contact Information:

Parker Hannifin
Hydraulic Filter Division Europe

European Product Information Centre
Freephone: 00800 27 27 5374
(from AT, BE, CH, CZ, DE, EE, ES, FI, FR, IE, IT, PT, SE, SK, UK)
filtrationinfo@parker.com

www.parker.com/hfde

Product Features:

- BGT features pre-filtration by means of a magnet column.
- Filter heads with multiple ports available.
- Flow from inside to out.
- Full flow bypass with low hysteresis.
- Maximum pressure 10 bar. Maximum flow 2400 l/min.
- Patented *LEIF®* elements safeguard filtration quality.

BGT Series

Tanktop Mounted Return Line Filters

Features & Benefits

Features	Advantages	Benefits
10 bar rated filter	Can be utilised for severe return line applications	Reduced downtime due to premature filter failures
Cast aluminium head	Compact profile, lightweight and durable	Less weight, smaller envelop and cleaner appearance
LEIF® elements	Element safeguards the use of genuine parts	Guaranteed quality of filtration
		Contributes to ISO 14001 certification
Magnetic pre-filtration	Removes ferrous particles, even during bypass conditions	Improved fluid cleanliness levels
		Extended element life time
In-to-Out filtration	All captured contamination retains inside the element	No recontamination of system during change of elements
High level of customisation	Dedicated system-matched solutions can be easily made available	Improved integration of filter in system combined with lower initial system costs
Quick response bypass with low hysteresis	Reduction of bypass period due to low hysteresis	Improved protection of system
	Only a small part of the total flow is bypassing the element	
Standard or customised funnel	Ensures that oil enters the tank under the oil level	Significant reduction of oil foaming

Typical Applications

- Mobile cranes
- Excavators
- Deck cranes
- Fire fighting equipment
- Hydraulic presses
- Waste balers
- Industrial power units
- Fork lift trucks



The Parker Filtration BGT Series Tank Mounted Return Line Filters.

BGT tanktop mounted return line filters feature pre-filtration by means of a magnet column and a quick response bypass with low hysteresis. Thanks to the 'In-to-Out' filter principle, contaminated oil cannot leak back into the system. BGT Filters are available in versions capable of handling flow rates up to 2400 l/min. They can operate with a maximum working pressure of 10 bar. *LEIF*® elements are available for environment-friendly filtration for versions up to 1500 l/min.

Tel: +45 63 12 83 00 | Email: ps@hymatik.com | www.hymatik.com | Hvidkaervej 27a, DK-5250 Odense SV, Denmark

Specification

Operating pressure:
Max. 10 bar.

Assembly:
Tank top mounted.

Connections:
Flanges SAE2", 3".
Threaded ports and multiple ports available.

Filter housing:
Aluminium head and cover.

Seal material:
Nitrile, fluoroelastomer, neoprene.

Operating temperature range:
Seal material Nitrile: -40° to +100°C.
Seal material Fluoroelastomer: -20° to +120°C.

Bypass setting
Opening pressure 0.8 / 1.5 or 2 bar.
Other settings on request.

Degree of filtration:
Determined by multipass test according to ISO 16889.

Flow fatigue characteristics:
Filter media is supported so that the optimum fatigue life is achieved.

Filtration media:
Microglass III and Ecoglass III for *LEIF*® elements.
Also available 10µm Cellulose and 40µm stainless steel mesh.

Element burst rating:
10 bar (ISO 2941).

Pressure indicator options:
Setting 0.7 or 1.2 bar.
Other settings on request.
Visual pressure gauge.
Electrical pressure switch.

Options:
Diffuser type P (straight pipe, no perforated plate area)
Diffuser type T (with closed diffuser end cap and with perforated plate area, recommended when oil entry in reservoir is close to the reservoir bottom or to ensure oil entry under the reservoir oil level)

Magnetic pack:
Standard.

Filling port in cover (optional):
BGT 3 = Plugged G1¼. BGT 4 = Plugged G1½.

Filter element:
LEIF® element with reusable metal element sleeve.
Conventional style element with steel end caps.
The *LEIF*® element is patented and safeguards the use of genuine parts.

Note:
LEIF® element can be used with mineral and HEES type oils.
For other fluids consult Parker Filtration.
LEIF® contributes to ISO 14001 quality standards.

BGT-3 Length 11 and 12 (*LEIF*® version)		
Ref.	**No.**	**Description**
1	1	Nut
2	1	Washer
3	1	Cover
4	1	Cover-seal
5	1	Top-spring
6	1	Housing
7	1	Insert-seal
8	1	Plug M10x1
9	1	Bonded seal
10	1	Insert
11	1	*LEIF*® element
12	1	Element sleeve
13	1	Gasket
14	1	O-ring
15	1	Bypass set
16	1	Diffuser

BGT-4 Length 13 and larger (conventional element)		
Ref.	**No.**	**Description**
1	1	Nut
2	1	Washer
3	1	Cover
4	1	Cover-seal
5	1	Top-spring
6	1	Housing
7	1	Insert-seal
8	1	Plug M10x1
9	1	Bonded seal
10	1	Insert
11	1	Element seal
12	1	Element
13	1	O-ring
14	1	O-ring
15	1	Bypass set
16	1	Diffuser

BGT-3 (*LEIF*® version)

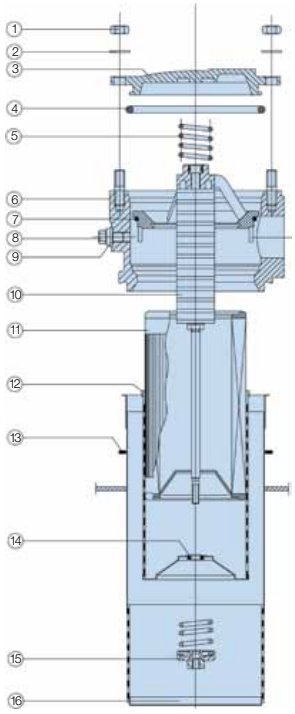

BGT-4 (conventional element)

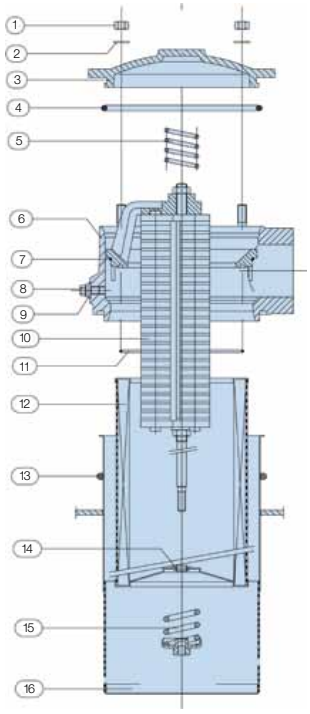

BGT Series

Tanktop Mounted Return Line Filters

Specification (cont.)

BGT-3 with diffuser

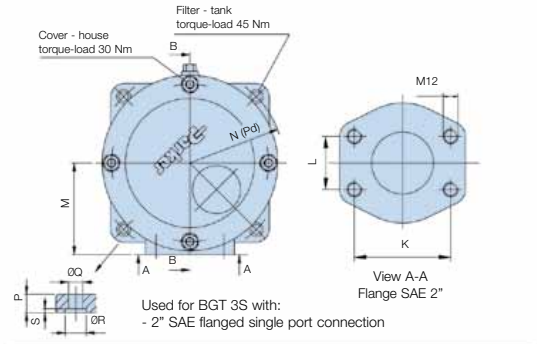

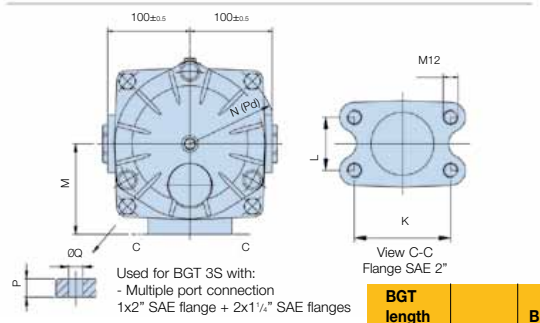

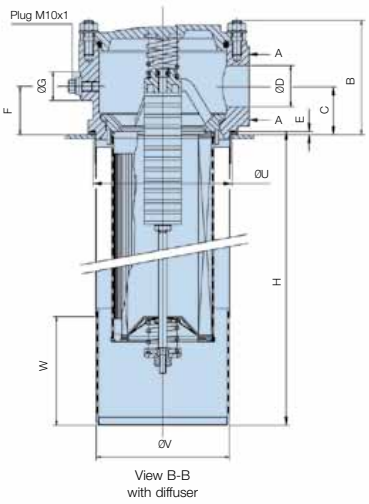

Dimensions in mm

BGT length		B	C	D	E	F	G	H	K	L	M	N(Pd)	P	Q	R	S	U	V	W	Kg.
11	**BGT390**	139	59	50	3	59	35	350	78	43	105	R107.5	14	13	16	3	$165.5^{+0.5}_{0}$	165	120	7.2
12	**BGT500**							540												8.6
Multipleport connection		(131)	(55)			(55)					(110)		(15)				$(166^{+0.5}_{0})$			

BGT-3 without diffuser

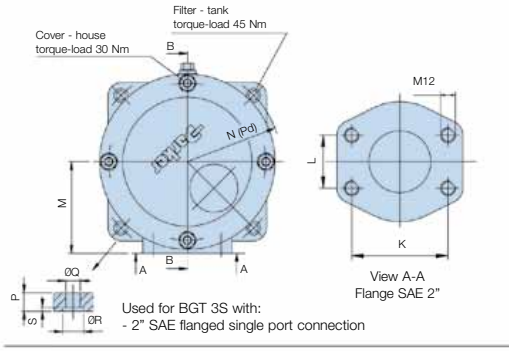

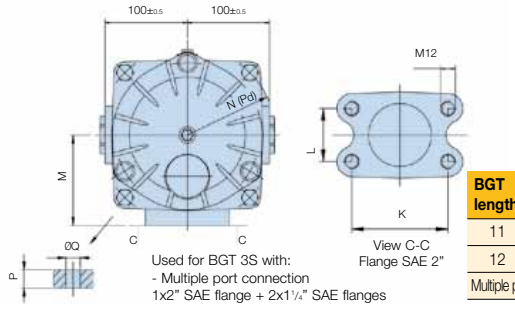

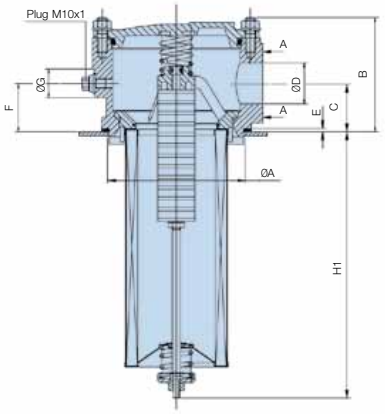

Dimensions in mm

BGT length		A	B	C	D	E	F	G	H1	K	L	M	N(Pd)	P	Q	R	S	Kg.
11	**BGT390**	$165.5^{+0.5}_{0}$	139	59	50	3	59	35	325	78	43	105	R107.5	14	13	16	3	7.2
12	**BGT500**								515									8.6
Multiple port connection		$(166.5^{+0.5}_{0})$	(131)	(55)			(55)					(110)		(15)				

Tel: +45 63 12 83 00 | Email: ps@hymatik.com | www.hymatik.com | Hvidkaervej 27a, DK-5250 Odense SV, Denmark

BGT-4 with diffuser

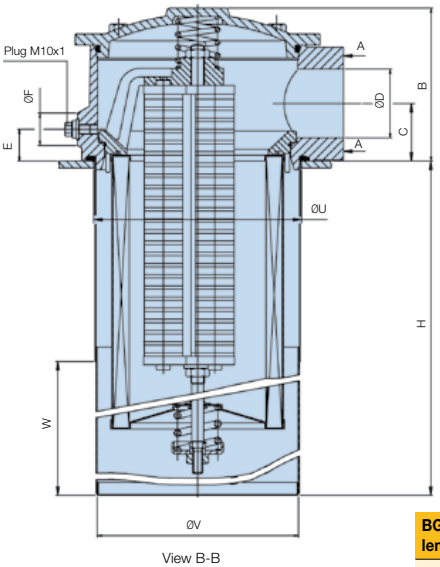

View B-B
with diffuser

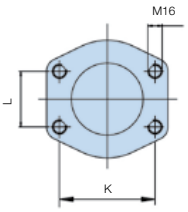

Flange SAE 3"
View A-A

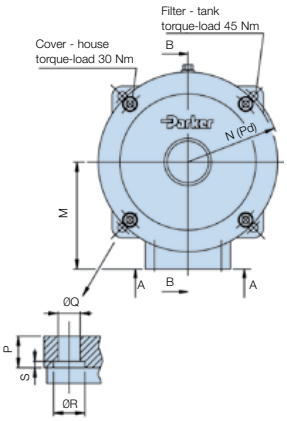

BGT length		B	C	ØD	E	ØF	H	K	L	M	N(Pd)	P	ØQ	ØR	S	ØU	ØV	W	Kg.
13	**BGT600**						425												20.5
14	**BGT800**						535												23.0
15	**BGT1000**	178	67	80	37	40	640	106.4	62	170	R147.5	20	14	20	4	$240.5^{+0.5}_{0}$	240	170	25.5
16	**BGT1500**						920												30.0
17	**BGT2000**						1200												37.0
18	**BGT2400**						1200												37.0

Note: dimensions of BGT-2400 identical to BGT-2000. Dimensions in mm

BGT-4 without diffuser

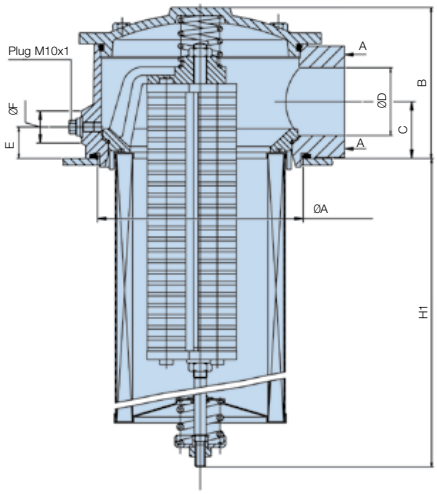

View B-B
without diffuser

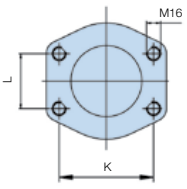

Flange SAE 3"
View A-A

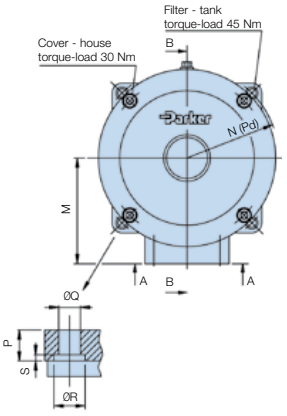

BGT length		ØA	B	C	ØD	E	ØF	H1	K	L	M	N(Pd)	P	ØQ	ØR	S	Kg.
13	**BGT600**							385									20.5
14	**BGT800**							495									23.0
15	**BGT1000**	$239.5^{+0.5}_{0}$	178	67	80	37	40	598	106.4	62	170	R147.5	20	14	20	4	25.5
16	**BGT1500**							878									30.0
17	**BGT2000**							1143									37.0
18	**BGT2400**							1143									37.0

Note: dimensions of BGT-2400 identical to BGT-2000. Dimensions in mm

Tel: +45 63 12 83 00 | Email: ps@hymatik.com | www.hymatik.com | Hvidkaervej 27a, DK-5250 Odense SV, Denmark

BGT Series

Tanktop Mounted Return Line Filters

Specification (cont.)

BGT F1¼ manifold type - with diffuser

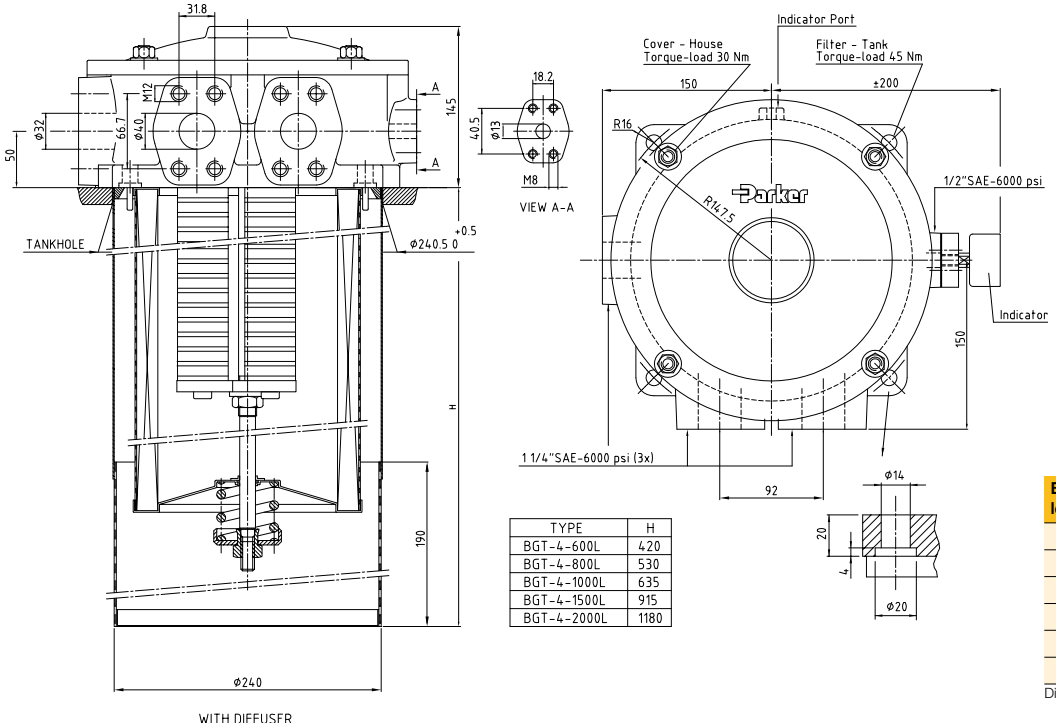

TYPE	H
BGT-4-600L	420
BGT-4-800L	530
BGT-4-1000L	635
BGT-4-1500L	915
BGT-4-2000L	1180

BGT length		H
13	**BGT600L**	420
14	**BGT800L**	530
15	**BGT1000L**	636
16	**BGT1500L**	915
17	**BGT2000L**	1180
18	**BGT2400L**	1180

Dimensions in mm

BGT F1¼ manifold type - without diffuser

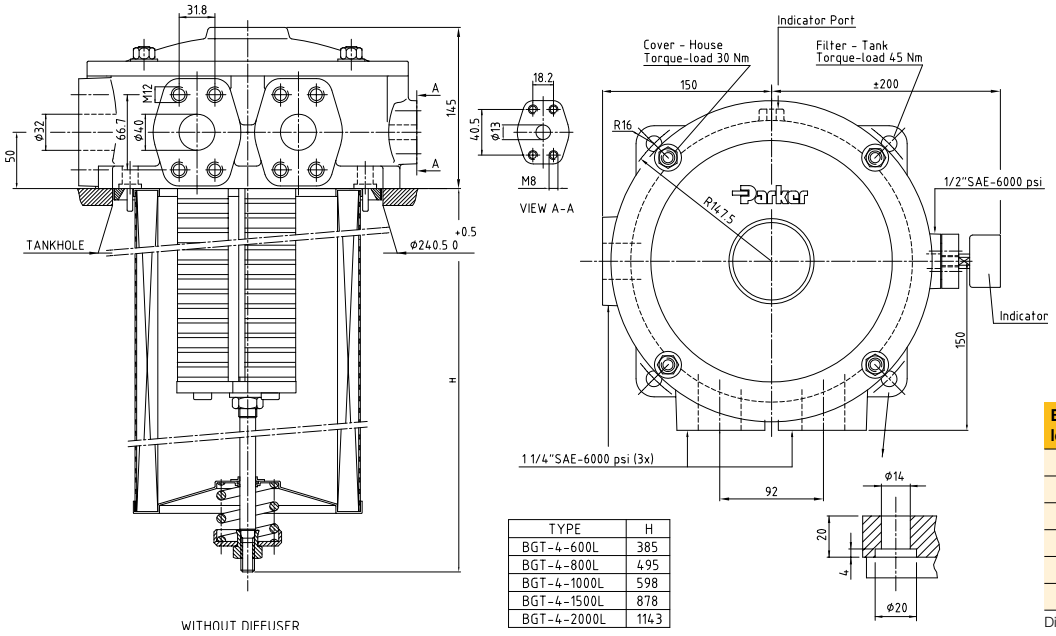

TYPE	H
BGT-4-600L	385
BGT-4-800L	495
BGT-4-1000L	598
BGT-4-1500L	878
BGT-4-2000L	1143

BGT length		H
13	**BGT600L**	385
14	**BGT800L**	495
15	**BGT1000L**	598
16	**BGT1500L**	878
17	**BGT2000L**	1143
18	**BGT2400L**	1143

Dimensions in mm

Indicator Options

Indicator PS pressure switch

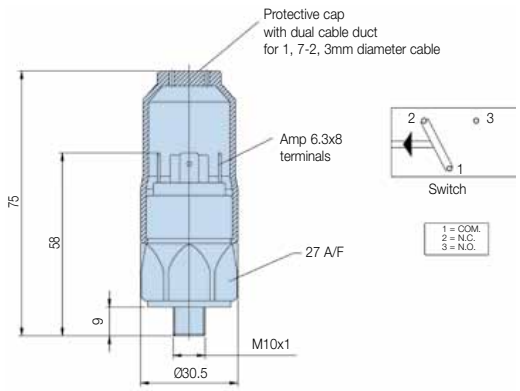

Specifications	
Elec.rating	42V / 4A
Thread connection	M10x1
Elec.connection	AMP 6.3x0.8 terminals + protective cap
Protection	IP65 (with cap) terminals IP00
Code	FMUS1EBMM10L (Switch)

Indicator Connection / Filter Head Matrix	
Port(s) Filter head	**Indicator Thread**
2" SAE BGT length 11 and 12	M10
3" SAE BGT Length 13 and larger	M10
1x2"SAE Flanged + 2 x 1¼" SAE Flanged for BGT Length 11 and 12	G⅛"
3x1¼" SAE Flanges + 1x ½" SAE for BGT Length 13 and larger	G⅛"

Indicator PS NO/NC pressure switch

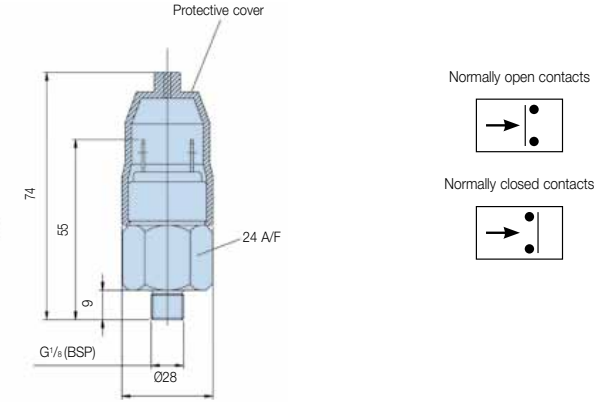

Specifications	
Elec.rating	42V / 2A
Thread connection	G⅛
Elec.connection	AMP terminal 6.3x0.8
Protection	IP65 (terminal IP00)
Switch type	NO or NC
Code	FMUS2EBMG02L (NO switch)
	FMUS3EBMG02L (NC switch)

Visual indicator	1.2 bar
M10 code	FMUG1EBPM10L
G⅛ code	FMUG2EBPG02L

Pressure Drop Curves

The recommended level of the initial pressure drop for low pressure filters is max 0.5 bar.
If the medium used has a viscosity different from 32cSt, pressure drop over the filter can be estimated as follows:
Δp = (Δp32 x viscosity of medium used) / 32cSt.
Filter housing and element pressure drop based on 32cSt fluid viscosity and 0.87 density.

BGT Empty Housing 2"SAE (Length code 11 and 12)

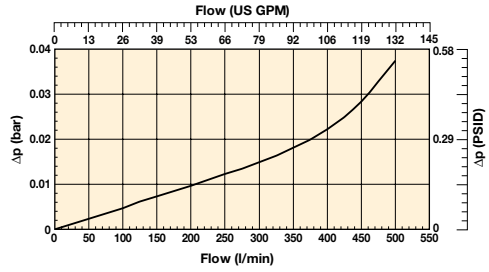

BGT390 (Element length code 11)

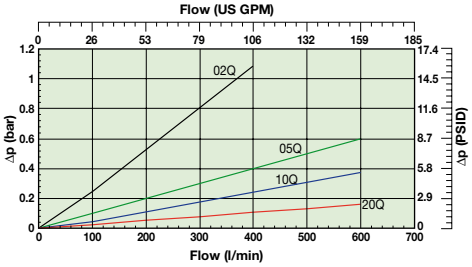

BGT500 (Element length code 12)

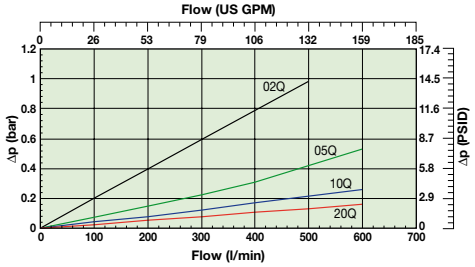

Parker Hannifin
Hydraulic Filter Division Europe
FDHB500UK/BGT

Tel: +45 63 12 83 00 | Email: ps@hymatik.com | www.hymatik.com | Hvidkaervej 27a, DK-5250 Odense SV, Denmark

BGT Series

Tanktop Mounted Return Line Filters

Pressure Drop Curves (cont.)

BGT Empty Housing 3"SAE (Length 13 and larger)

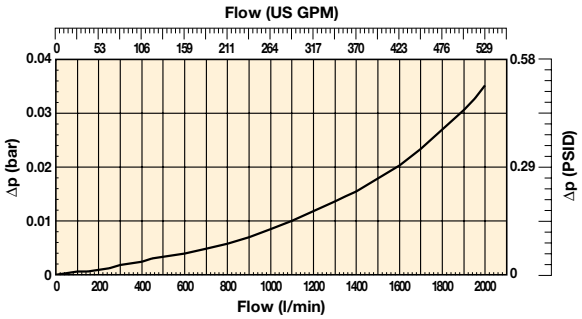

BGT600 (Element length code 13)

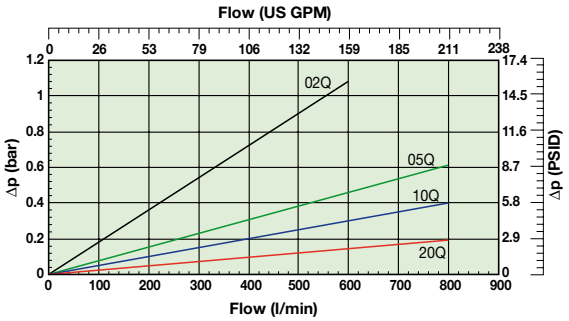

BGT800 (Element length code 14)

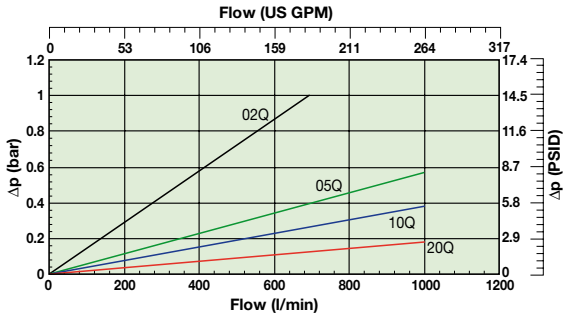

BGT1000 (Element length code 15)

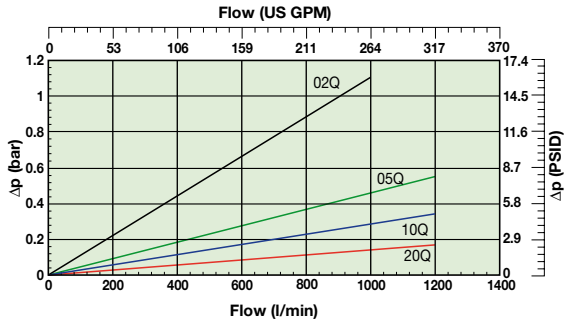

BGT1500 (Element length code 16)

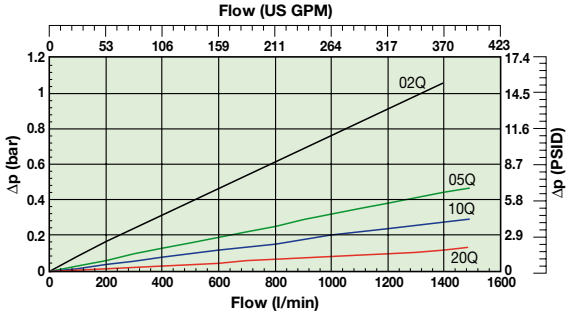

BGT2000 (Element length code 17)

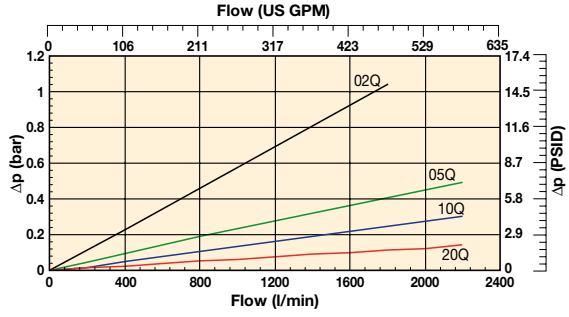

BGT2400 (Element length code 18)

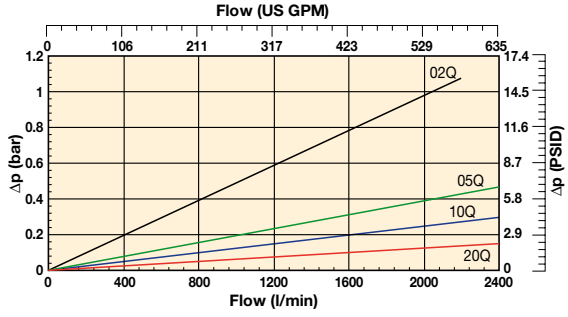

Pressure Drop Curves (cellulose and stainless steel media)

BGT390 (Element length code 11)
Cellulose & Stainless steel media

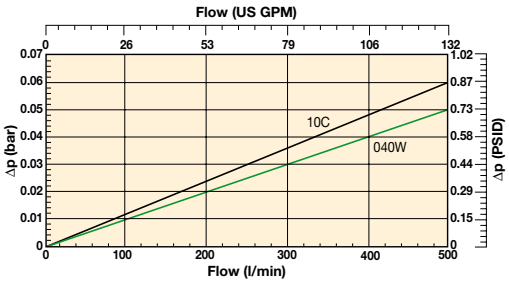

BGT390 (Element length code 11)
Cellulose & Stainless steel media

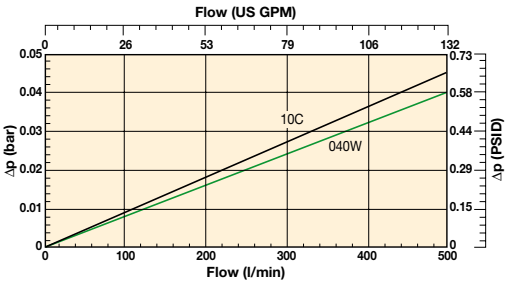

BGT600 (Element length code 13)
Cellulose & Stainless steel media

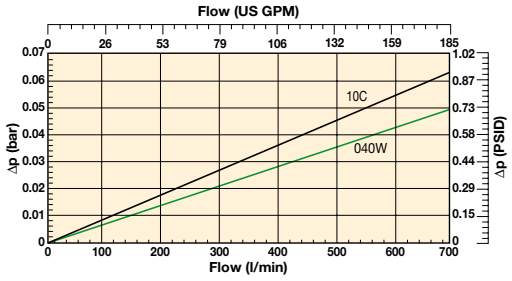

BGT800 (Element length code 14)
Cellulose & Stainless steel media

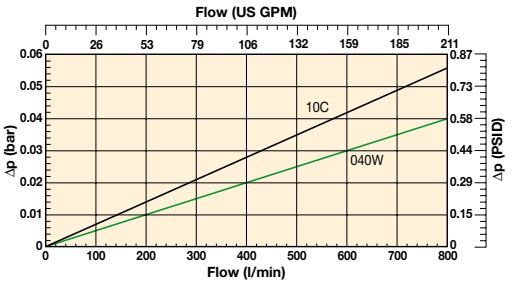

BGT1000 (Element length code 15)
Cellulose & Stainless steel media

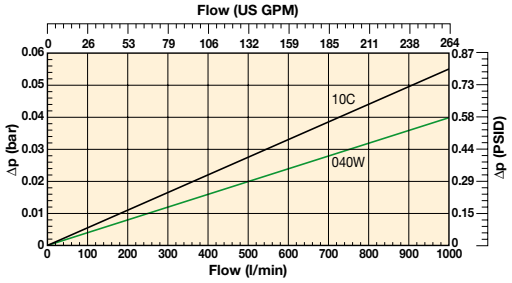

BGT1500 (Element length code 16)
Cellulose & Stainless steel media

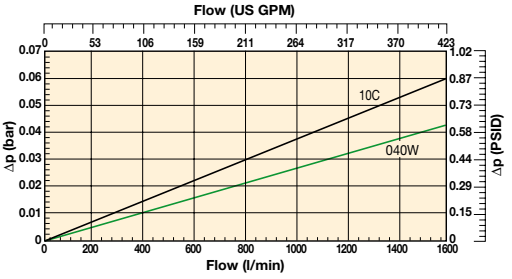

BGT2000 (Element length code 17)
Cellulose & Stainless steel media

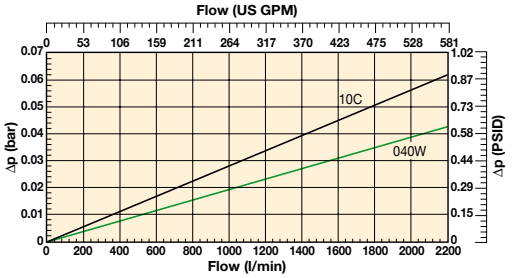

Cellulose and stainless steel media
Example: BGT2000 Filter Element Length 17 - cellulose and stainless steel media

Tel: +45 63 12 83 00 | Email: ps@hymatik.com | www.hymatik.com | Hvidkaervej 27a, DK-5250 Odense SV, Denmark

BGT Series

Tanktop Mounted Return Line Filters

Ordering Information

Standard products table

Part number	Supersedes	Flow (l/min)	Model number	Element length	Media rating (µ)	Seals	Indicator	Bypass settings	Ports	Included options	Replacement elements	Supersedes
BGT1210QLBPER323	BGTS500-S2 TXWL8C-10 T B15 M	500	BGT500	Length 12	10	Nitrile	Plugged	1.5 Bar (22 Psi)	2"SAE-3000 PSI	Diffuser type T	**937859Q**	TXWL8L-10
BGT1220QLBPER323	BGTS500-S2 TXWL8C-20 T B15 M	500	BGT500	Length 12	20	Nitrile	Plugged	1.5 Bar (22 Psi)	2"SAE-3000 PSI	Diffuser type T	**937868Q**	TXWL8L-20
BGT1510QLBPER483	BGTS1000-S3 TXWL12-10 T B15 M	1000	BGT1000	Length 15	10	Nitrile	Plugged	1.5 Bar (22 Psi)	3"SAE-3000 PSI	Diffuser type T	**937862Q**	TXWL12-10
BGT1520QLBPER483	BGTS1000-S3 TXWL12-20 T B15 M	1000	BGT1000	Length 15	20	Nitrile	Plugged	1.5 Bar (22 Psi)	3"SAE-3000 PSI	Diffuser type T	**937865Q**	TXWL12-20
BGT1710QBPER483	BGTS2000-S3 TXW14-10 T B15 M	2000	BGT2000	Length 17	10	Nitrile	Plugged	1.5 Bar (22 Psi)	3"SAE-3000 PSI	Diffuser type T	**937772Q**	TXW14-10B
BGT1720QBPER483	BGTS2000-S3 TXW14-20 T B15 M	2000	BGT2000	Length 17	20	Nitrile	Plugged	1.5 Bar (22 Psi)	3"SAE-3000 PSI	Diffuser type T	**937805Q**	TXW14-20B

Note: Filter assemblies ordered from the product configurator below are on extended lead times. Where possible, please make your selection from the table above.

Product configurator

Configurator examples filter including *LEIF*® element

Box 1	Box 2	Box 3	Box 4	Box 5	Box 6	Box 7	Box 8
BGT	**15**	**05QL**	**B**	**S1**	**E**	**R48**	**C**

Configurator examples filter including conventional element

Box 1	Box 2	Box 3	Box 4	Box 5	Box 6	Box 7	Box 8
BGT	**18**	**02Q**	**B**	**S4**	**E**	**3R20**	**4**

Box 1

Code
BGT

Box 2

Filter type	
Housing	**Code**
BGT390	11
BGT500	**12**
BGT600	13
BGT800	14
BGT1000	**15**
BGT1500	16
BGT2000	**17**
BGT2400	18

Box 3

Degree of filtration						
Element media		**Glass fibre**				
		Microglass III (for disposable elements)				
	Cellulose	Ecoglass III (for *LEIF*® elements)				**Wire mesh**
	Nom. rating					Abs. rating
Disposable element	10C	02Q	05Q	**10Q**	**20Q**	040W
***LEIF*® element**		02QL	**05QL**	**10QL**	**20QL**	

Box 4

Seal type	
Seal material	**Code**
Nitrile	**B**
Fluorelastomer	V
Neoprene	on request

Box 5

Indicator	
	Code
Pressure gauge, setting 1.2 bar, M10x1	**G1**
Pressure gauge, setting 1.2 bar, G1/8 for dual port head	G2
Pressure switch 42V, 1.2 bar setting, NO/NC, M10x1	**S1**
Pressure switch 42V, 1.2 bar setting, NO with G1/8 BSP	S2
Pressure switch 42V, 1.2 bar setting, NC with G1/8 BSP	S3
Pressure switch 250V, NO/NC with G1/8	S4
Pressure switch 220V, NO/NC with M10	S5
No indicator, indicator ports not machined	On request
No indicator, indicator port B plugged	**P**
Other settings for indicators / gauges on request	on request

Note: For all dual head ports for BGTS apply G1/8 connection for indicators

Box 6

Bypass valve	
Bypass valve	**Code**
0.8 bar	B
1.5 bar	**E**
2.0 bar for BGT-3 series (length 11 and 12)	H
Blocked bypass	X
Other bypass settings	on request

Box 7

Filter connection	
Ports	**Code**
2" SAE BGT length 11 and 12	**R32**
3" SAE BGT Length 13 and larger	**R48**
1x2" SAE Flanged + 2 x 1 1/4" SAE Flanged for BGT Length 11 and 12	R32M
3x1 1/4" SAE Flanges + 1x 1/2" SAE for BGT Length 13 and larger	3R20

Box 8

Options	
Options	**Code**
No diffuser required	**1**
Diffuser type T with perforated plate area	**3**
Diffuser type P without perforated plate area	4
No magnets	5
Plugged filling port	8
Diffuser type T and no magnets	A
Diffuser type P and no magnets	B
Diffuser type T, no magnets, plugged filling port	C
Diffuser type P, no magnets, plugged filling port	D
Diffuser type T, magnets and filling port	E
Diffuser type P, magnets and filling port	F
Air tight diffuser type T	G
Air tight diffuser type P	H
Other combinations	on request
ATEX cerfified* (Category 2, non-electrical equipment)	EX

Note 1*: For ATEX classified filters add EX after the code.
ATEX certified filters with electrical indicator are available on request.
Visual indicators are classified as Category 2, non electrical equipment.
Filter assemblies with EX code will be supplied with a dedicated name plate.
Pls consult Parker Filtration for any questions related to the classification of our products.

Highlights Key (Denotes part number availability)

123	Item is standard
123	Item is standard green option
123	Item is semi standard
123	Item is non standard

Note 1: Part numbers featured with bold highlighted codes will ensure a 'standard' product selection.
Note 2: Alternate displayed part number selection will require you to contact Parker Filtration for availability.

Tel: +45 63 12 83 00 | Email: ps@hymatik.com | www.hymatik.com | Hvidkaervej 27a, DK-5250 Odense SV, Denmark

Ordering Information (cont.)

Degree of filtration						Media code
Average filtration beta ratio ß (ISO 16889) / particle size µm [c]						
ßx(c)=2	ßx(c)=10	ßx(c)=75	ßx(c)=100	ßx(c)=200	ßx(c)=1000	
% efficiency, based on the above beta ratio (ßx)						
50.0%	90.0%	98.7%	99.0%	99.5%	99.9%	
N/A	N/A	N/A	N/A	N/A	4.5	**02Q/02QL**
N/A	N/A	4.5	5	6	7	**05Q/05QL**
N/A	6	8.5	9	10	12	**10Q/10QL**
6	11	17	18	20	22	**20Q/20QL**

Supersedes spare element table				
BGT390	TXWL8A-2	TXWL8A-5	TXWL8A-10	TXWL8A-20
Part number spare element	937832Q	937843Q	937858Q	937869Q
BGT500	TXWL8C-2	TXWL8C-5	TXWL8C-10	TXWL8C-20
Part number spare element	937833Q	937842Q	937859Q	937868Q
BGT600	TXWL10-2	TXWL10-5	TXWL10-10	TXWL10-20
Part number spare element	937834Q	937841Q	937860Q	937867Q
BGT800	TXWL11-2	TXWL11-5	TXWL11-10	TXWL11-20
Part number spare element	937835Q	937840Q	937861Q	937866Q
BGT1000	TXWL12-2	TXWL12-5	TXWL12-10	TXWL12-20
Part number spare element	937836Q	937839Q	937862Q	937865Q
BGT1500	TXWL13-2	TXWL13-5	TXWL13-10	TXWL13-20
Part number spare element	937837Q	937838Q	937863Q	937864Q

Supersedes spare element table						
BGT390	TXX8A-10-B	TXW8A-2-B	TXW8A-5-B	TXW8A-10-B	TXW8A-20-B	ST8A-40-B
Part number spare element	937728	937742Q	937763Q	937778Q	937799Q	937813
BGT500	TXX8C-10-B	TXW8C-2-B	TXW8C-5-B	TXW8C-10-B	TXW8C-20-B	ST8C-40-B
Part number spare element	937729	937741Q	937764Q	937777Q	937800Q	937812
BGT600	TXX10-10-B	TXW10-2-B	TXW10-5-B	TXW10-10-B	TXW10-20-B	ST10-40-B
Part number spare element	937730	937740Q	937765Q	937776Q	937801Q	937811
BGT800	TXX11-10-B	TXW11-2-B	TXW11-5-B	TXW11-10-B	TXW11-20-B	ST11-40-B
Part number spare element	937731	937739Q	937766Q	937775Q	937802Q	937810
BGT1000	TXX12-10-B	TXW12-2-B	TXW12-5-B	TXW12-10-B	TXW12-20-B	ST12-40-B
Part number spare element	937732	937738Q	937767Q	937774Q	937803Q	937809
BGT1500	TXX13-R-10-B	TXW13-R-2-B	TXW13-R-5-B	TXW13-R-10-B	TXW13-R-20-B	ST13-40-B
Part number spare element	937733	937737Q	937768Q	937773Q	937804Q	937808
BGT2000	TXX14-10-B	TXW14-2-B	TXW14-5-B	TXW14-10-B	TXW14-20-B	ST14-40-B
Part number spare element	937734	937736Q	937769Q	937772Q	937805Q	937807
BGT2400	-	TXWH14-2-B	TXWH14-5-B	TXWH14-10-B	TXWH14-20-B	-
Part number spare element		937735Q	937770Q	937771Q	937806Q	

BGT Series Seal Kits

BGT Filter connection	Nitrile Seal kit
Port(s) Filter head	**Part Number**
2" SAE BGT length 11 and 12	**2049010017**
3" SAE BGT Length 13 and larger	**2049010023**
1x2" SAE Flanged + 2 x 1¼" SAE Flanged for BGT Length 11 and 12	**918045048**
3x1¼" SAE Flanges + 1x ½" SAE for BGT Length 13 and larger	**2049010020**

Tel: +45 63 12 83 00 | Email: ps@hymatik.com | www.hymatik.com | Hvidkaervej 27a, DK-5250 Odense SV, Denmark



ENVIRONMENTALLY-FRIENDLY FILTRATION SOLUTIONS

Trust Parker to provide you with a range of 'green' filter products that impact positively on the environment. With the new E-series your customers benefit from a solution that's smarter, safer and more responsible when it comes to filtration.

By significantly reducing waste levels, the E-Series is designed to increase the lifespan of hydraulic machinery. The Suction Return filter series features *LEIF*® elements that can be crushed and incinerated. By reducing bulk for disposal and recycling the material, this cost-effective solution contributes to a safer, cleaner environment.

Through Parker's advanced Laser CM technology, all vehicle operators can monitor fluid contamination on-site through a simple two minute test. This accurate monitoring method helps prevent catastrophic failure in critical systems instantly.

When it comes to filtration solutions you can rely on - the future is Parker.

Enjoy the benefits of 'green' filtration, email filtrationinfo@parker.com

Parker

Parker Hannifin
Hydraulic Filter Division Europe
FDHB500UK.

IN-AGB Series

In-Tank Mounted Return Line Filters
Max. 2400 l/min



Flow from inside to out

Designed for in-built filtration

The IN-AGB Series features a quick response bypass construction with low hysteresis, magnetic pre-filtration and a high dirt-holding capacity. Flow rates from 30 l/min to 2400 l/min. *LEIF*® elements available up to 1500 l/min. A low cost, high performance filter.



Contact Information:

Parker Hannifin
Hydraulic Filter Division Europe

European Product Information Centre
Freephone: 00800 27 27 5374
(from AT, BE, CH, CZ, DE, EE, ES, FI, FR, IE, IT, PT, SE, SK, UK)
filtrationinfo@parker.com

www.parker.com/hfde

Product Features:

- IN-AGB features a bypass construction with low hysteresis.
- Magnetic pre-filtration and a high dirt-holding capacity.
- Wide range of diffusers including airtight options.
- Flow from inside to out.
- Flow rates from 30 l/min to 2400 l/min.
- Patented *LEIF*® elements safeguard filtration quality.

IN-AGB Series

In-Tank Mounted Return Line Filters

Features & Benefits

Features	Advantages	Benefits
Filter integrated in tank	Compact low cost solution Filter protected by reservoir	Suitable for extreme heavy duty applications or hazardous environments
		No tank top parts contributes to improved esthetical design
LEIF® elements	Element safeguards the use of genuine parts	Guaranteed quality of filtration
		Contributes to ISO 14001 certification
Magnetic pre-filtration	Removes ferrous particles, even during bypass conditions	Improved fluid cleanliness levels
		Extended element life time
In-to-Out filtration	All captured contamination retains inside the element	No recontamination of system during change of elements
High level of customisation	Dedicated system-matched solutions can be easily made available	Improved integration of filter in system combined with lower initial system costs
Quick response bypass with low hysteresis	Reduction of bypass period due to low hysteresis	Improved protection of system
	Only a small part of the total flow is bypassing the element	
Standard or customised funnel	Ensures that oil enters the tank under the oil level	Significant reduction of oil foaming

Typical Applications

- Agricultural machines
- Articulated dump trucks
- Forestry equipment
- Wheeled loaders
- Lubrication systems
- Excavators

The Parker Filtration IN-AGB In-Tank Mounted Return Line Filters.

The low-cost, high-performance return line IN-AGB filter features Q3 filter media, a bypass construction with low hysteresis, magnetic pre-filtration and a high dirt-holding capacity. The range is capable of handling flow rates from 30 l/min up to 2400 l/min. *LEIF*® elements are available for flow rates up to 1500 l/min, meeting the most stringent demands for environmentally-friendly filtration and offering protection against poor quality pirate elements.



Tel: +45 63 12 83 00 | Email: ps@hymatik.com | www.hymatik.com | Hvidkaervej 27a, DK-5250 Odense SV, Denmark

Specification

Assembly:
Inside tank.

Seal material:
Nitrile, fluoroelastomer, neoprene.

Operating temperature range:
Seal material Nitrile: -40° to +100°C.
Seal material Fluoroelastomer: -20° to +100°C.

Bypass setting:
0.8/1.5 and 2.0 bar.
Other settings on request.

Degree of filtration:
Determined by multipass test according to ISO 16889.

Flow fatigue characteristics:
Filter media is supported so that the optimal fatigue life is achieved.

Filtration media:
Microglass III, Ecoglass III for *LEIF*® elements
Also available 10µm Cellulose and 40µm stainless steel mesh.

Element burst rating:
10 bar (ISO 2941).

Options:
Diffuser type P (straight pipe, no perforated plate area)
Diffuser type T (with closed diffuser end cap and with perforated plate area, recommended when oil entry in reservoir is close to the reservoir bottom or to ensure oil entry under the reservoir oil level)

Magnetic pack:
Standard.
Note: IN-AGB 2-400 and 2-500 are standard supplied without magnets.

Filter element:
LEIF® element with reusable metal element sleeve.
Optional conventional style element with steel end caps.
The *LEIF*® element is patented and safeguards the use of genuine parts.
Note: *LEIF*® element can be used with mineral and HEES type oils.
For other fluids consult Parker Filtration.
LEIF® contributes to ISO 14001 quality standards.

Insert-AGB *LEIF*® 1-3 series		
Ref.	**No.**	**Description**
1	1	Top-spring
2	1	Insert
3	1	Insert-seal
4	1	*LEIF*® Element
5	1	Sleeve
6	1	Gasket
7	1	O-ring
8	1	Bypass set
9	1	Diffuser

Insert-AGB *LEIF*® 4 series		
Ref.	**No.**	**Description**
1	1	Top-spring
2	1	Insert
3	1	Insert-seal
4	1	Inner sleeve
5	1	*LEIF*®-element
6	1	Outer sleeve
7	1	O-ring
8	1	O-ring
9	1	Bypass set
10	1	Diffuser

1-3 Series

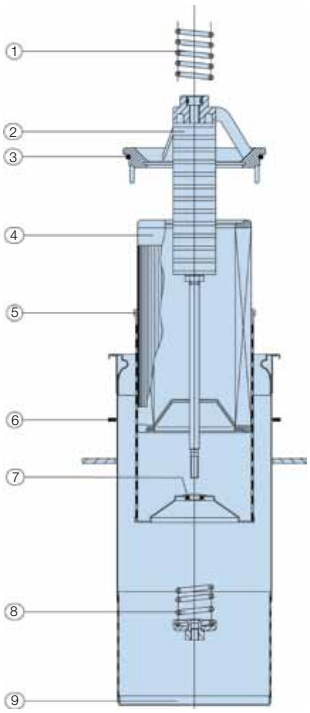

4 Series

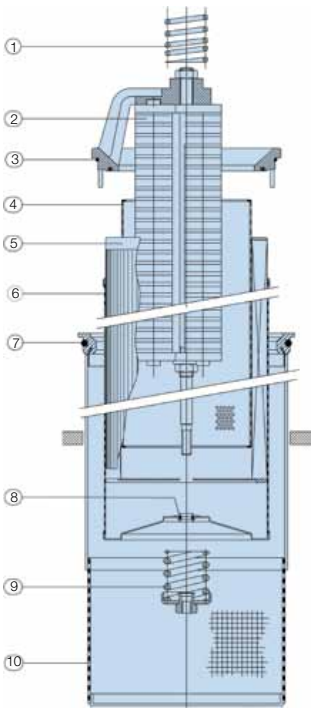

IN-AGB Series

In-Tank Mounted Return Line Filters

Specification (cont.)

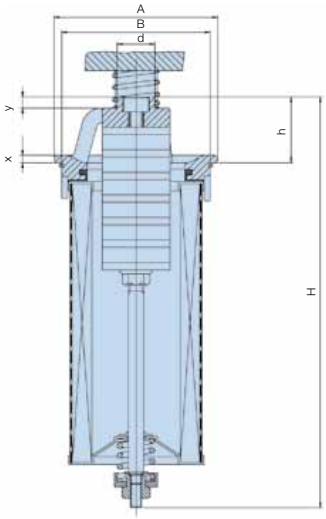

without diffuser

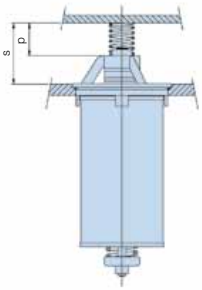

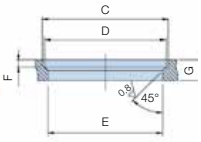

Mounting arrangement

	INAGB Length	Type	A	B	H	h	d	x	y	s	p	C	D	E	F	G
1 Series	0	IN30	87	79	122	35	20	4	6	45	20	88	85	80	4	12
	2	IN60	87	79	173	35	20	4	6	45	20	88	85	80	4	12
	3	IN90	87	79	217	35	20	4	6	45	20	88	85	80	4	12
	4	IN120	87	79	267	35	20	4	6	45	20	88	85	80	4	12
	5	IN125	87	79	381	35	20	4	6	45	20	88	85	80	4	12
2 Series	6	IN170	125	116	284	48	25	5	8	77	42	126	122	117	5	15
	7	IN230	125	116	360	48	25	5	8	77	42	126	122	117	5	15
	8	IN300	125	116	559	48	25	5	8	77	42	126	122	117	5	15
	9	IN400	125	116	579	48	25	5	8	77	42	126	122	117	5	15
	10	IN500	125	116	599	48	25	5	8	77	42	126	122	117	5	15
3 Series	11A	IN270	150	138	325	62	30	7	12	100	55	151	149	139	5	18
	11	IN390	150	138	407	62	30	7	12	100	55	151	149	139	5	18
	12	IN500	150	138	599	62	30	7	12	100	55	151	149	139	5	18

Dimensions in mm

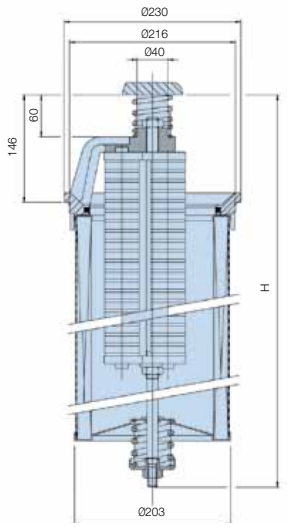

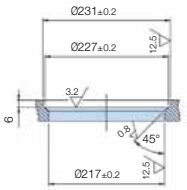

without diffuser

INAGB Length	Type	H
13	IN600	543
14	IN800	653
15	IN1000	758
16	IN1500	1038
17	IN2000	1303
18	IN2400	1303

Dimensions in mm

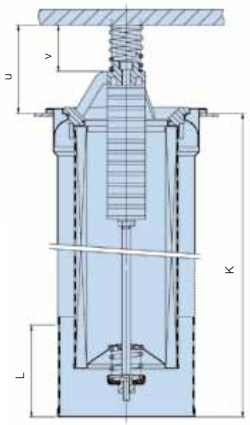

with diffuser

IN-AGB 3

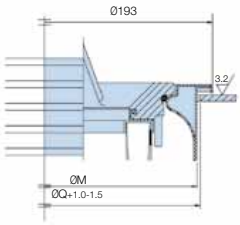

IN-AGB 4

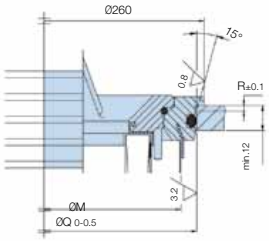

	INAGB Length	Type	K	L	M	U	V	Q	R
3 Series	11A	IN270	324	110	175	106	55	178	
	11	IN390	364	110	175	106	55	178	
	12	IN500(3)	554	125	175	106	55	178	
4 Series	13	IN600	445	183	239	145	60	250.5	2.5
	14	IN800	555	183	239	145	60	250.5	2.5
	15	IN1000	660	183	239	145	60	250.5	2.5
	16	IN1500	940	183	239	145	60	250.5	2.5
	17	IN2000	1220	183	239	145	60	250.5	2.5
	18	IN2400	1220	183	239	145	60	250.5	2.5

Dimensions in mm

Pressure Drop Curves

The recommended level of the initial pressure drop for low pressure filters is max 0.5 bar.
If the medium used has a viscosity different from 32cSt, pressure drop over the filter can be estimated as follows:
Δp = (Δp32 x viscosity of medium used) / 32cSt.
Filter housing and element pressure drop based on 32cSt fluid viscosity and 0.87 density.

IN30 (Element length code 0)

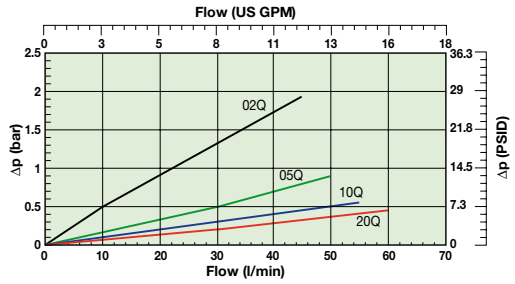

IN60 (Element length code 2)

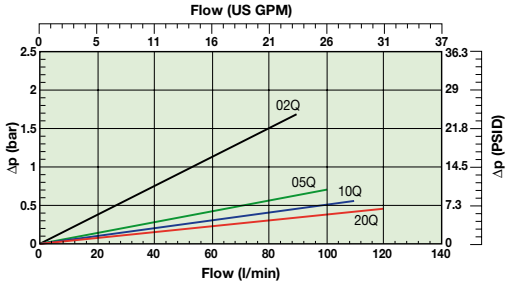

IN90 (Element length code 3)

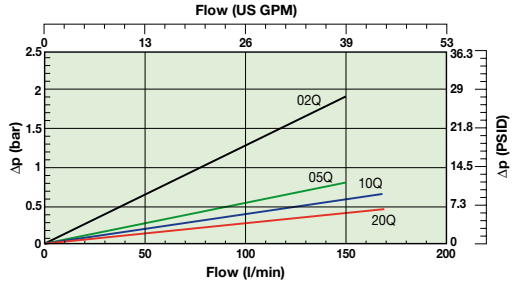

IN120 (Element length code 4)

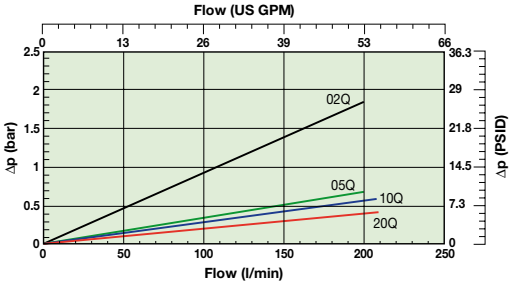

IN150 (Element length code 5)

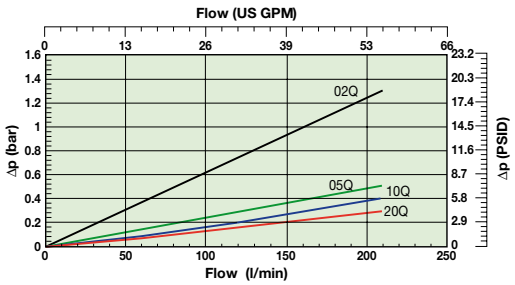

IN170 (Element length code 6)

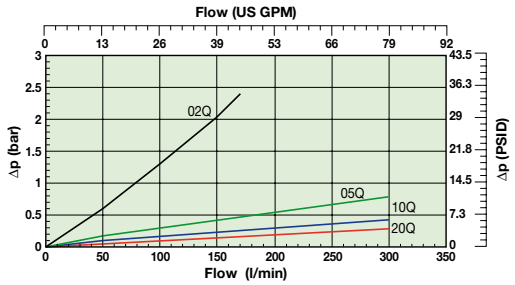

IN230 (Element length code 7)

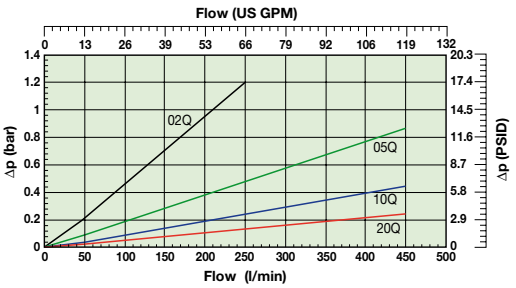

IN300 (Element length code 8)

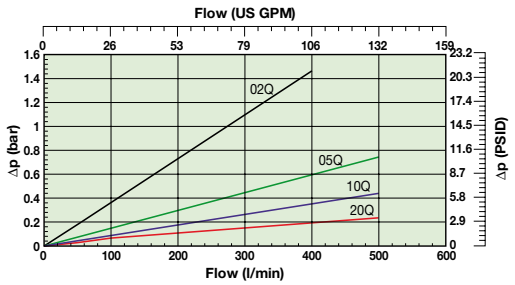

Tel: +45 63 12 83 00 | Email: ps@hymatik.com | www.hymatik.com | Hvidkaervej 27a, DK-5250 Odense SV, Denmark

IN-AGB Series

In-Tank Mounted Return Line Filters

Pressure Drop Curves (cont.)

IN400 (Element length code 9)

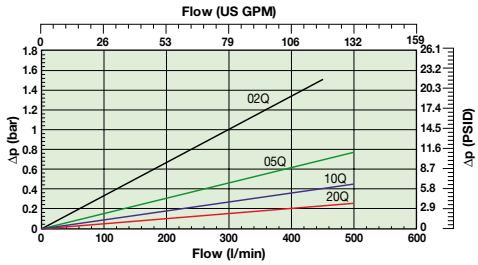

IN500 (Element length code 10)

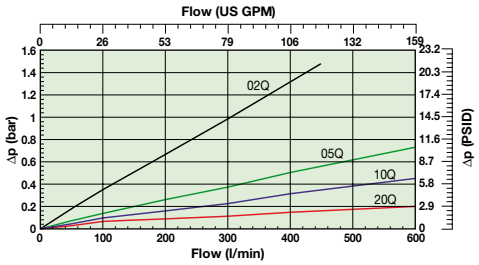

IN390 (3)(Element length code 11)

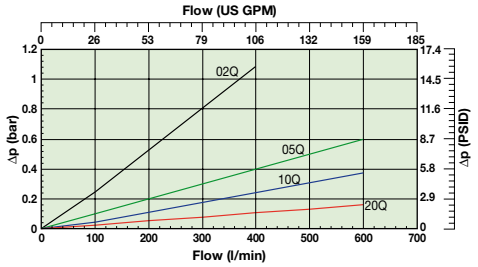

IN500 (3) (Element length code 12)

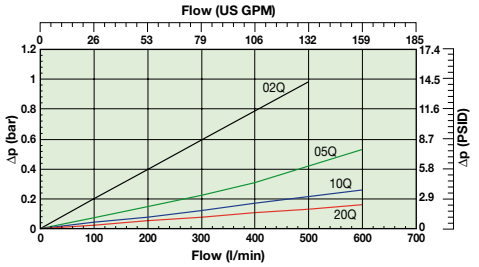

IN600 (Element length code 13)

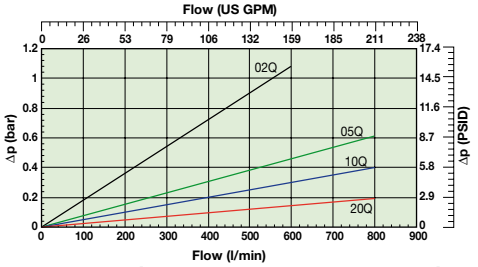

IN800 (Element length code 14)

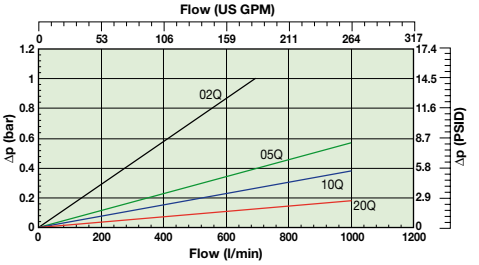

IN1000 (Element length code 15)

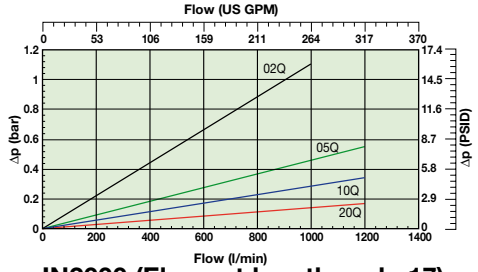

IN1500 (Element length code 16)

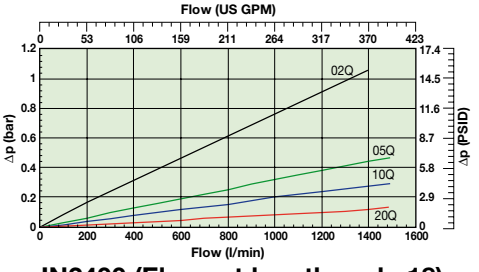

IN2000 (Element length code 17)

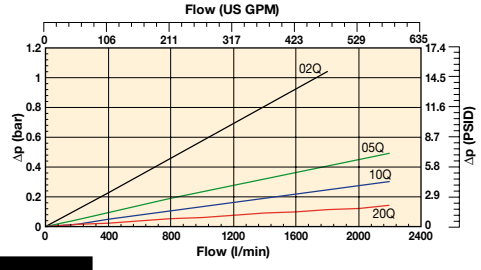

IN2400 (Element length code 18)

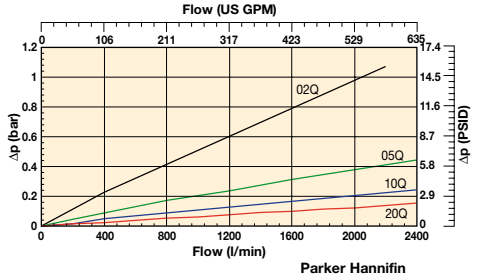

Tel: +45 63 12 83 00 | Email: ps@hymatik.com | www.hymatik.com | Hvidkaervej 27a, DK-5250 Odense SV, Denmark

Pressure Drop Curves (cellulose and stainless steel media)

IN30 (Element length code 0)
Cellulose & Stainless steel media

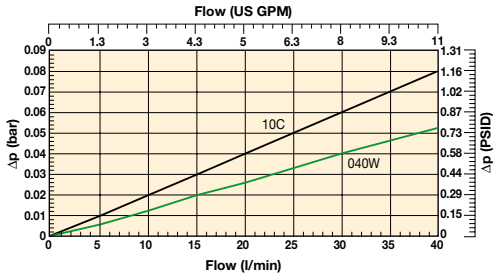

IN60 (Element length code 2)
Cellulose & Stainless steel media

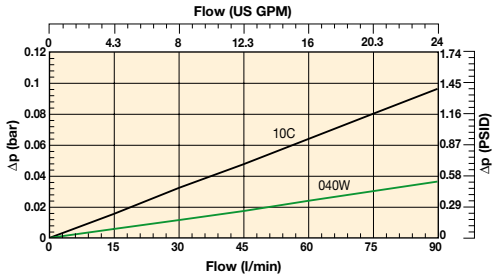

IN90 (Element length code 3)
Cellulose & Stainless steel media

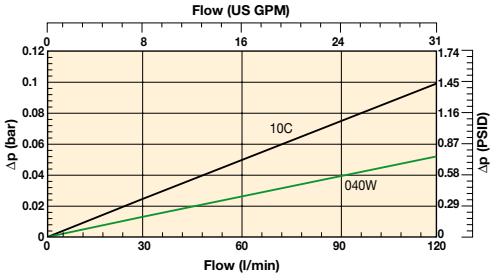

IN120 (Element length code 4)
Cellulose & Stainless steel media

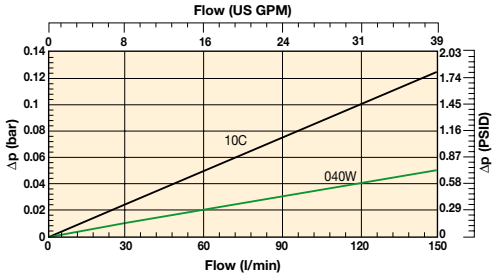

IN150 (Element length code 5)
Cellulose & Stainless steel media

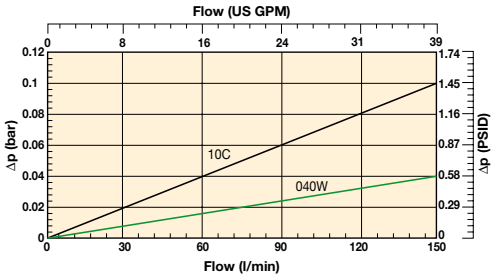

IN170 (Element length code 6)
Cellulose & Stainless steel media

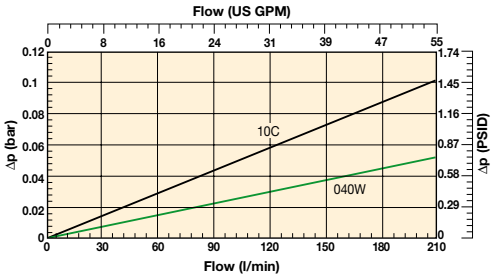

IN230 (Element length code 7)
Cellulose & Stainless steel media

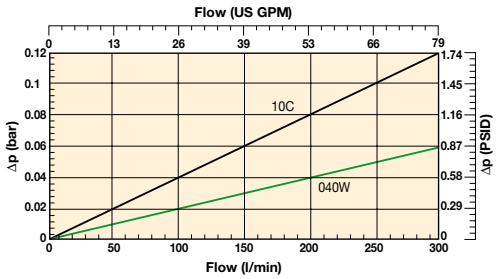

IN300 (Element length code 8)
Cellulose & Stainless steel media

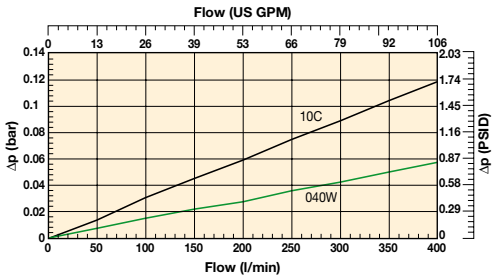

Cellulose and stainless steel media
Example: IN300 Filter Element Length 8 - Cellulose and stainless steel media

Tel: +45 63 12 83 00 | Email: ps@hymatik.com | www.hymatik.com | Hvidkaervej 27a, DK-5250 Odense SV, Denmark

IN-AGB Series

In-Tank Mounted Return Line Filters

Pressure Drop Curves (cellulose and stainless steel media)

IN390 (Element length code 11)
Cellulose & Stainless steel media

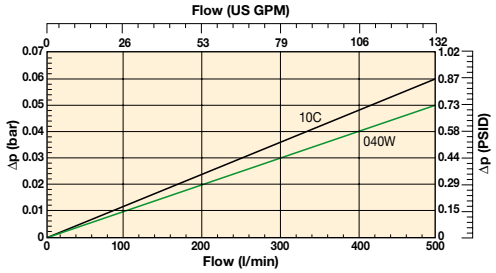

IN500 (Element length code 12)
Cellulose & Stainless steel media

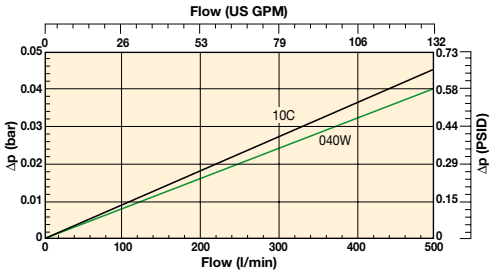

IN600 (Element length code 13)
Cellulose & Stainless steel media

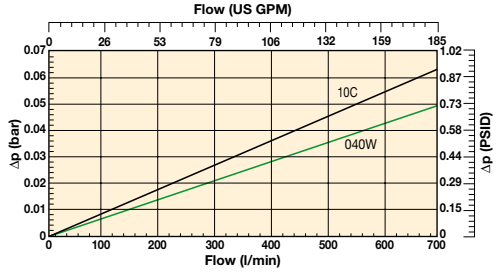

IN800 (Element length code 14)
Cellulose & Stainless steel media

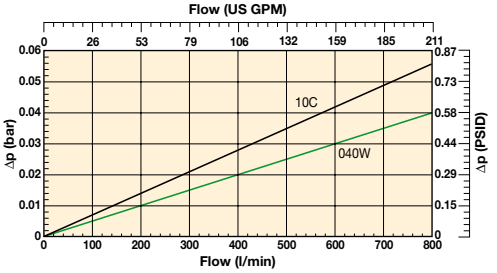

IN1000 (Element length code 15)
Cellulose & Stainless steel media

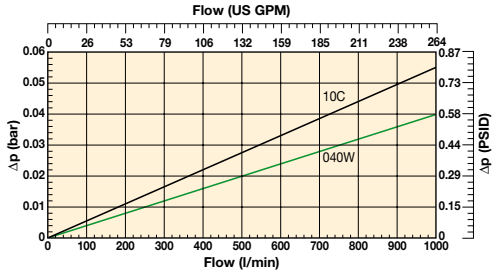

IN1500 (Element length code 16)
Cellulose & Stainless steel media

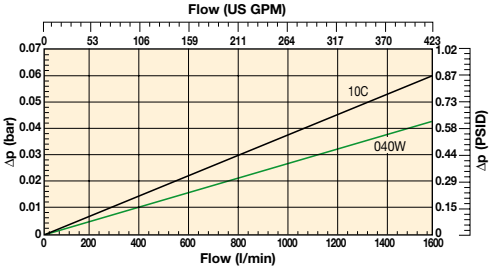

IN2000 (Element length code 17)
Cellulose & Stainless steel media

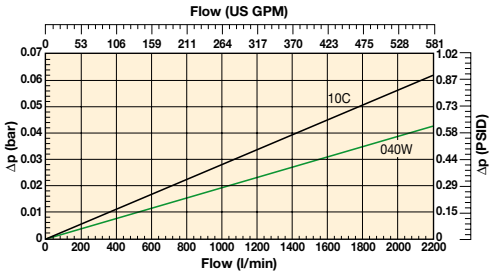

Cellulose and stainless steel media
Example: IN300 Filter Element Length 8 - Cellulose and stainless steel media

Tel: +45 63 12 83 00 | Email: ps@hymatik.com | www.hymatik.com | Hvidkaervej 27a, DK-5250 Odense SV, Denmark

Ordering Information

Standard products table

Part number	Supersedes	Flow (l/min)	Model number	Element length	Media rating (µ)	Seals	Indicator	Bypass settings	Ports	Included options	Replacement elements	Supersedes
IN310QLBNEXXX1	IN90-TXWL3-10B15	90	IN90	Length 3	10	Nitrile	NA	1.5 Bar (22 Psi)	NA	None	**937878Q**	TXWL3-10
IN320QLBNEXXX1	IN90-TXWL3-20 B15	90	IN90	Length 3	20	Nitrile	NA	1.5 Bar (22 Psi)	NA	None	**937877Q**	TXWL3-20
IN510QLBNEXXX1	IN125-TXWL3E-10 B15	125	IN125	Length 5	10	Nitrile	NA	1.5 Bar (22 Psi)	NA	None	**937852Q**	TXWL3E-10
IN520QLBNEXXX1	IN125-TXWL3E-20 B15	125	IN125	Length 5	20	Nitrile	NA	1.5 Bar (22 Psi)	NA	None	**937875Q**	TXWL3E-20
IN610QLBNEXXX1	IN170-TXWL4-10 B15	170	IN170	Length 6	10	Nitrile	NA	1.5 Bar (22 Psi)	NA	None	**937853Q**	TXWL4-10
IN620QLBNEXXX1	IN170-TXWL4-20 B15	170	IN170	Length 6	20	Nitrile	NA	1.5 Bar (22 Psi)	NA	None	**937874Q**	TXWL4-20
IN810QLBNEXXX1	IN300-TXWL5A-10 B15	300	IN300	Length 8	10	Nitrile	NA	1.5 Bar (22 Psi)	NA	None	**937855Q**	TXWL5A-10
IN820QLBNEXXX1	IN300-TXWL5A-20 B15	300	IN300	Length 8	20	Nitrile	NA	1.5 Bar (22 Psi)	NA	None	**937872Q**	TXWL5A-20
IN1210QLBNEXXX3	IN500-TXWL8C-10 T B15	500	IN500	Length 12	10	Nitrile	NA	1.5 Bar (22 Psi)	NA	Diffuser type T	**937859Q**	TXWL8C-10
IN1220QLBNEXXX3	IN500-TXWL8C-20 T B15	500	IN500	Length 12	20	Nitrile	NA	1.5 Bar (22 Psi)	NA	Diffuser type T	**937868Q**	TXWL8C-20
IN1510QLBNEXXX3	IN1000-TXWL12-10 T B15	1000	IN1000	Length 15	10	Nitrile	NA	1.5 Bar (22 Psi)	NA	Diffuser type T	**937862Q**	TXWL12-10
IN1520QLBNEXXX3	IN1000-TXWL12-20 T B15	1000	IN1000	Length 15	20	Nitrile	NA	1.5 Bar (22 Psi)	NA	Diffuser type T	**937865Q**	TXWL12-20
IN1710QBNEXXX3	IN2000-TXW14-10-B T B15	2000	IN2000	Length 17	10	Nitrile	NA	1.5 Bar (22 Psi)	NA	Diffuser type T	**937772Q**	TXW14-10B
IN1720QBNEXXX3	IN2000-TXW14-20-B T B15	2000	IN2000	Length 17	20	Nitrile	NA	1.5 Bar (22 Psi)	NA	Diffuser type T	**937805Q**	TXW14-20B

Note: Filter assemblies ordered from the product configurator below are on extended lead times. Where possible, please make your selection from the table above.

Product configurator

Configurator example filter including *LEIF*® element

Box 1	Box 2	Box 3	Box 4	Box 5	Box 6	Box 7	Box 8
IN	**10**	**05QL**	**V**	**N**	**H**	**XXX**	**1**

Configurator example filter including conventional element

Box 1	Box 2	Box 3	Box 4	Box 5	Box 6	Box 7	Box 8
IN	**18**	**20Q**	**B**	**N**	**H**	**XXX**	**3**

Box 1

Code
IN

Box 2

Filter Rating	
Insert IN-AGB	**Code**
IN30	0
IN60	2
IN90	**3**
IN120	4
IN150	**5**
IN170	**6**
IN230	7
IN300	**8**
IN400	9
IN500	**10**
IN390(3)	11
IN270(3)	11A
IN500(3)	**12**
IN600	13
IN800	14
IN1000	**15**
IN1500	16
IN2000	**17**
IN2400	18

Box 3

Degree of filtration						
Element media		**Glass fibre**				
		Microglass III (for disposable elements)				
	Cellulose	Ecoglass III (for *LEIF*® elements)				**Wire mesh**
	Nom. rating					Abs. rating
Disposable element	10C	02Q	05Q	**10Q**	**20Q**	040W
***LEIF*® element**		02QL	**05QL**	**10QL**	**20QL**	

Box 4

Seal type	
Seal material	**Code**
Nitrile	**B**
Fluoroelastomer	V
Neoprene	On request

Box 5

Indicator	
	Code
No indicator	**N**

Box 7

Filter connection	
Ports	**Code**
No ports applicable	**XXX**

Box 8

Options	
Options	**Code**
No diffuser required	**1**
Diffuser type T with perforated plate area	**3**
Diffuser type P without perforated plate area	4
No magnets	5
Diffuser type T and no magnets	A
Diffuser type P and no magnets	B
Air tight diffuser type T and no magnets	G
Air tight diffuser type P and no magnets	H

Note: IN-AGB size 2-400 and 2-500 are standard supplied without magnets
Note: Diffusers are only available for series 3 and 4 (Length 11 to 18)

Box 6

Bypass valve	
Bypass valve	**Code**
0.8 bar	B
1.5 bar	**E**
2.0 bar for IN-AGB (up to length 12)	H
Blocked bypass	X
Other bypass settings	on request

Degree of filtration						Media code
Average filtration beta ratio ß (ISO 16889) / particle size µm [c]						
ßx(c)=2	**ßx(c)=10**	**ßx(c)=75**	**ßx(c)=100**	**ßx(c)=200**	**ßx(c)=1000**	
% efficiency, based on the above beta ratio (ßx)						
50.0%	**90.0%**	**98.7%**	**99.0%**	**99.5%**	**99.9%**	
N/A	N/A	N/A	N/A	N/A	4.5	**02Q/02QL**
N/A	N/A	4.5	5	6	7	**05Q/05QL**
N/A	6	8.5	9	10	12	**10Q/10QL**
6	11	17	18	20	22	**20Q/20QL**

Parker Hannifin
Hydraulic Filter Division Europe
FDHB500UK/IN-AGB

IN-AGB Series

In-Tank Mounted Return Line Filters

Ordering Information (cont.)

Supersedes spare element table				
IN30	TXWL-2	TXWL-5	TXWL-10	TXWL-20
Part number spare element	937822Q	937885Q	937884Q	937883Q
IN60	TXWL2-2	TXWL2-5	TXWL2-10	TXWL2-20
Part number spare element	937823Q	937880Q	937881Q	937882Q
IN90	TXWL3-2	TXWL3-5	TXWL3-10	TXWL3-20
Part number spare element	937824Q	937879Q	937878Q	937877Q
IN120	TXWL3D-2	TXWL3D-5	TXWL3D-10	TXWL3D-20
Part number spare element	937825Q	937850Q	937851Q	937876Q
IN125	TXWL3E-2	TXWL3E-5	TXWL3E-10	TXWL3E-20
Part number spare element	937826Q	937849Q	937852Q	937875Q
IN170	TXWL4-2	TXWL4-5	TXWL4-10	TXWL4-20
Part number spare element	937827Q	937848Q	937853Q	937874Q
IN230	TXWL5-2	TXWL5-5	TXWL5-10	TXWL5-20
Part number spare element	937828Q	937847Q	937854Q	937873Q
IN300	TXWL5A-2	TXWL5A-5	TXWL5A-10	TXWL5A-20
Part number spare element	937829Q	937846Q	937855Q	937872Q
IN400	TXWL5B-2	TXWL5B-5	TXWL5B-10	TXWL5B-20
Part number spare element	937830Q	937845Q	937856Q	937871Q
IN500	TXWL5C-2	TXWL5C-5	TWXL5C-10	TXWL5C-20
Part number spare element	937831Q	937844Q	937857Q	937870Q
IN390	TXWL8A-2	TXWL8A-5	TXWL8A-10	TXWL8A-20
Part number spare element	937832Q	937843Q	937858Q	937869Q
IN500	TXWL8C-2	TXWL8C-5	TXWL8C-10	TXWL8C-20
Part number spare element	937833Q	937842Q	937859Q	937868Q
IN600	TXWL10-2	TXWL10-5	TXWL10-10	TXWL10-20
Part number spare element	937834Q	937841Q	937860Q	937867Q
IN800	TXWL11-2	TXWL11-5	TXWL11-10	TXWL11-20
Part number spare element	937835Q	937840Q	937861Q	937866Q
IN1000	TXWL12-2	TXWL12-5	TXWL12-10	TXWL12-20
Part number spare element	937836Q	937839Q	937862Q	937865Q
IN1500	TXWL13-2	TXWL13-5	TXWL13-10	TXWL13-20
Part number spare element	937837Q	937838Q	937863Q	937864Q

IN-AGB Series Seal Kits	
Part Number	**Description**
2049010003	NITRILE SEAL KIT IN 0 - 5
2049010045	FLUOROELASTOMER SEAL KIT IN 0 - 5
2049010004	NITRILE SEAL KIT IN 6 - 10
2049010028	FLUOROELASTOMER SEAL KIT IN 6 - 10
2049010005	NITRILE SEAL KIT IN 11 and 12
2049010021	NITRILE SEAL KIT (FUNNEL) IN 11 and 12
2049010029	FLUOROELASTOMER SEAL KIT IN 11 and 12
2049010059	FLUOROELASTOMER SEAL (FUNNEL) KIT IN 11 and 12
2049010006	NITRILE SEAL KIT IN 13 - 18
2049010022	NITRILE SEAL KIT (FUNNEL) IN 13 - 18
2049010030	FLUOROELASTOMER SEAL KIT IN 13 - 18

Supersedes spare element table						
IN30	TXX-10-B	TXW-2-B	TXW-5-B	TXW-10-B	TXW-20-B	ST-40-B
Part number spare element	937720	937752Q	937753Q	937788Q	937789Q	937821
IN60	TXX2-10-B	TXW2-2-B	TXW2-5-B	TXW2-10-B	TXW2-20-B	ST2-40-B
Part number spare element	937721	937751Q	937754Q	937787Q	937790Q	937820
IN90	TXX3-10-B	TXW3-2-B	TXW3-5-B	TXW3-10-B	TXW3-20-B	ST3-40-B
Part number spare element	937722	937750Q	937755Q	937786Q	937791Q	937819
IN120	TXX3D-10-B	TXW3D-2-B	TXW3D-5-B	TXW3D-10-B	TXW3D-20-B	ST3D-40-B
Part number spare element	937723	937749Q	937756Q	937785Q	937792Q	937818
IN125	TXX3E-10-B	TXW3E-2-B	TXW3E-5-B	TXW3E-10-B	TXW3E-20-B	ST3E-40-B
Part number spare element	937724	937748Q	937757Q	937784Q	937793Q	937817
IN170	TXX4-10-B	TXW4-2-B	TXW4-5-B	TXW4-10-B	TXW4-20-B	ST4-40-B
Part number spare element	937725	937747Q	937758Q	937783Q	937794Q	937816
IN230	TXX5-10-B	TXW5-2-B	TXW5-5-B	TXW5-10-B	TXW5-20-B	ST5-40-B
Part number spare element	937726	937746Q	937759Q	937782Q	937795Q	937815
IN300	TXX5A-10-B	TXW5A-2-B	TXW5A-5-B	TXW5A-10-B	TXW5A-20-B	ST5A-40-B
Part number spare element	937727	937745Q	937760Q	937781Q	937796Q	937814
IN390	TXX8A-10-B	TXW8A-2-B	TXW8A-5-B	TXW8A-10-B	TXW8A-20-B	ST8A-40-B
Part number spare element	937728	937742Q	937763Q	937778Q	937799Q	937813
IN500 (3 series)	TXX8C-10-B	TXW8C-2-B	TXW8C-5-B	TXW8C-10-B	TXW8C-20-B	ST8C-40-B
Part number spare element	937729	937741Q	937764Q	937777Q	937800Q	937812
IN600	TXX10-10-B	TXW10-2-B	TXW10-5-B	TXW10-10-B	TXW10-20-B	ST10-40-B
Part number spare element	937730	937740Q	937765Q	937776Q	937801Q	937811
IN800	TXX11-10-B	TXW11-2-B	TXW11-5-B	TXW11-10-B	TXW11-20-B	ST11-40-B
Part number spare element	937731	937739Q	937766Q	937775Q	937802Q	937810
IN1000	TXX12-10-B	TXW12-2-B	TXW12-5-B	TXW12-10-B	TXW12-20-B	ST12-40-B
Part number spare element	937732	937738Q	937767Q	937774Q	937803Q	937809
IN1500	TXX13-R-10-B	TXW13-R-2-B	TXW13-R-5-B	TXW13-R-10-B	TXW13-R-20-B	ST13-40-B
Part number spare element	937733	937737Q	937768Q	937773Q	937804Q	937808
IN2000	TXX14-10-B	TXW14-2-B	TXW14-5-B	TXW14-10-B	TXW14-20-B	ST14-20
Part number spare element	937734	937736Q	937769Q	937772Q	937805Q	937807
IN2400	-	TXWH14-2-B	TXWH14-5-B	TXWH14-10-B	TXWH14-20-B	-
Part number spare element		937735Q	937770Q	937771Q	937806Q	

Tel: +45 63 12 83 00 | Email: ps@hymatik.com | www.hymatik.com | Hvidkaervej 27a, DK-5250 Odense SV, Denmark

Tanktopper Series I, II & III

Tanktop Mounted Return Line Filters
with Integrated Air Breather
Max. 650 l/min - 10 bar



When an all-in-one solution matters

Reduction of reservoir accessories

The Tanktopper Series features an integrated, 10 micron Abs. air breather. Maximum pressure 10 bar. Maximum flow 650 l/min. *LEIF*® elements available. An all-in-one, easy-to-mount filter range for more compact tank design.



Contact Information:

Parker Hannifin
Hydraulic Filter Division Europe

European Product Information Centre
Freephone: 00800 27 27 5374
(from AT, BE, CH, CZ, DE, EE, ES, FI, FR, IE, IT, PT, SE, SK, UK)
filtrationinfo@parker.com

www.parker.com/hfde

Product Features:

- Tanktopper offers a total filtration solution with integrated air breather.
- In-to-Out filtration plus gauge and switch options.
- Maximum pressure 10 bar. Maximum flow 650 l/min.
- Patented *LEIF*® elements safeguard filtration quality.

Tanktopper Series I, II & III

Tanktop Mounted Return Line Filters with Integrated Air Breather

Features & Benefits

Features	Advantages	Benefits
Return line filter with Integrated airbreather	All in one filter	More compact design, cost reduction due to elimination of loose airbreather
Airbreather equipped with high quality labyrinth	No oil leakage through the airbreather	Improved efficiency of airbreather
		No oil leakage on the tank / in the environment
Second port and dipstick available	Filler port and level indicator function can be integrated in filter	Significant reduction of reservoir accessories
Airbreather element always supplied with spare return line filter elements	Both filter elements can be replaced during the service event	Improved protection of system due to change of airbreather element
LEIF® elements	Element safeguards the use of genuine parts	Guaranteed quality of filtration
		Contributes to ISO 14001 certification
Magnetic pre-filtration	Removes ferrous particles, even during bypass conditions	Improved fluid cleanliness levels
		Extended element life time
In-to-Out filtration	All captured contamination retains inside the element	No recontamination of system during change of elements
Full flow bypass with low hysteresis	Reduction of bypass period due to low hysteresis	Improved protection of system
	Only a small part of the total flow is bypassing the element	
Standard or customised funnel	Ensures that oil enters the tank under the oil level	Significant reduction of oil foaming

Typical Applications

TPR I
- Fork lift trucks
- Power packs
- Mini excavator

TPR II
- Gully-sucker
- Power packs
- Dredging ships

TPR III
- Mobile cranes
- Refuse vehicles



The Parker Filtration Tanktopper Series I, II & III Tanktop Mounted Return Line Filters.

The TPR Series I, II & III offer a total filtration solution. A 10-micron Abs. air breather that is integrated into the filter housing, a magnet column for pre-filtration, 'In-to-Out' filtration, a full-flow bypass with low hysteresis, and the high performance Q3 filter element materials are all proven success factors in efficient return-line filtration for flow rates up to 650 l/min. Several pressure gauges and switches can be applied, combined or not with a dipstick. The all-in-one, easy-to-mount cost-saving TPR solution allows for a more compact tank design.

Specification

Operation pressure:
Max. 10 bar.

Assembly:
Tank top mounted.

Connections:
Threaded BSP or SAE ports.
Second return port available for Tanktopper II and Tanktopper III.

Filter housing:
Aluminium head and co-polymer cover.

Seal material:
Nitrile, Fluoroelastomer.

Operation temperature range:
-40 to +80°C.

Bypass setting:
Opening pressure 0.8, 1.5 or 2.5 bar for Tanktopper I.
Opening pressure 1.5 bar for Tanktopper II and III.

Degree of filtration:
Determined by multipass test according to ISO 16889.

Flow fatigue characteristics:
Filter media is supported so that the optimum fatigue life is achieved.

Filtration media:
Microglass III, Ecoglass III for *LEIF*® element. Air breather 10 micron Abs.
Also available 10µm Cellulose and 40µm stainless steel mesh. (TPR1)

Element burst rating:
10 bar (ISO 2941).

Pressure indicator options:
Setting 0.7 or 1.2 bar.
Other settings on request.
Visual pressure gauge.
Electrical pressure switch.

Options:
Dipstick
Second port (only for TPR II and III)

Magnetic pack:
Optional for Tanktopper I.
Standard for Tanktopper II and III.

Filter element:
LEIF® element with reusable metal element sleeve.
Conventional style element with steel end caps only optional for Tanktopper I. The *LEIF*® element is patented and safeguards the use of genuine parts.
Note: *LEIF*® element can be used with mineral and HEES type oils. For other fluids consult Parker Filtration.
LEIF® contributes to ISO 14001 quality standards

Tanktopper I (length 1 and 2)

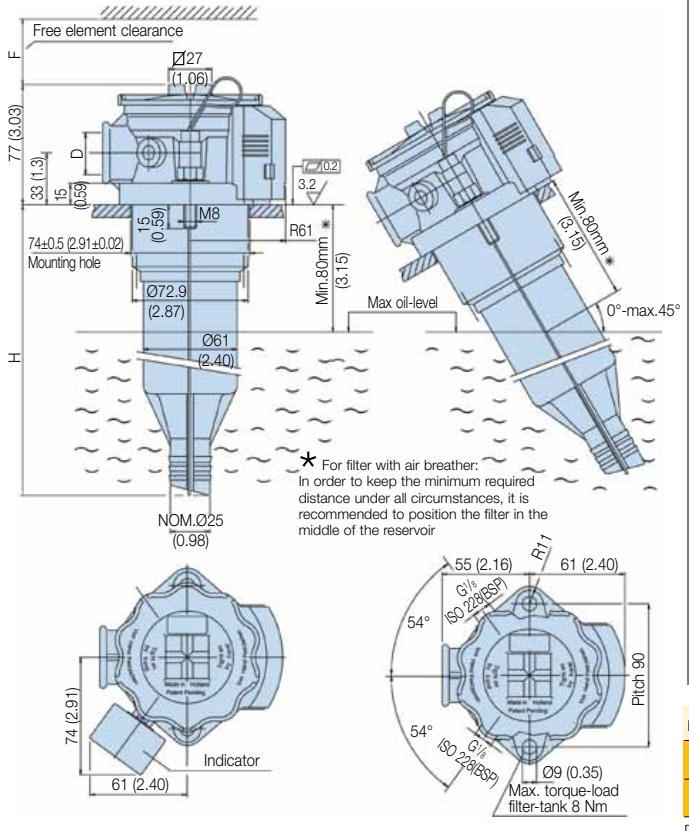

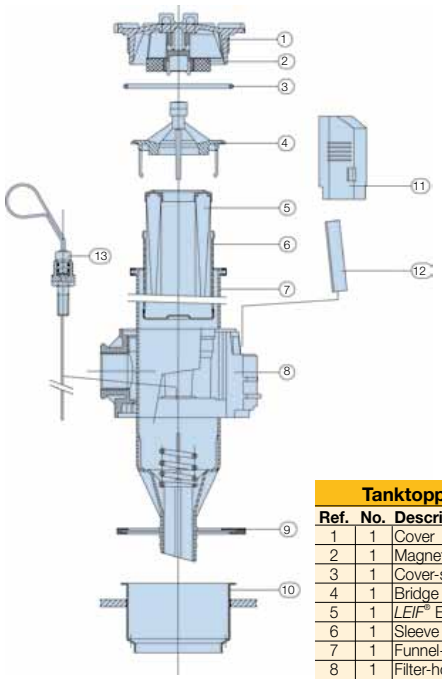

Length		H	F	D
1	TPR1-40	169 (6.65)	160 (6.30)	G¾ (BSP)
2	TPR1-80	269 (10.60)	260 (10.23)	SAE 12

Dimensions in mm

Tanktopper I

Ref.	No.	Description
1	1	Cover
2	1	Magnet-set
3	1	Cover-seal
4	1	Bridge (blue)
5	1	*LEIF*® Element
6	1	Sleeve
7	1	Funnel-assembly
8	1	Filter-housing
9	1	Housing-seal
10	1	Airguide
11	1	Cover airbreather
12	1	Breather-element
13	1	Dipstick assembly

Parker Hannifin
Hydraulic Filter Division Europe
FDHB500UK/Tanktopper

Tel: +45 63 12 83 00 | Email: ps@hymatik.com | www.hymatik.com | Hvidkaervej 27a, DK-5250 Odense SV, Denmark

Tanktopper Series I, II & III

Tanktop Mounted Return Line Filters with Integrated Air Breather

Specification (cont.)

Tanktopper II (length 5, 6 and 7)

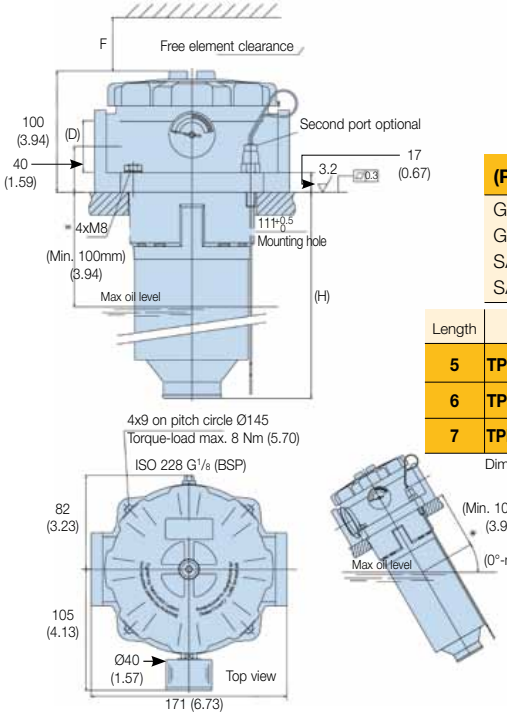

(Port)	D
G1¼	(BSP)
G1½	(BSP)
SAE 20	
SAE 24	

Length		H	F
5	TPR2-120	181 (7.12)	170 (6.70)
6	TPR2-200	267 (10.51)	255 (10.03)
7	TPR 2-250	400 (15.75)	380 (14.96)

Dimensions in mm

* For filter with air breather:
In order to keep the minimum required distance under all circumstances, it is recommended to position the filter in the middle of the reservoir

Tanktopper III (length 10 and 11)

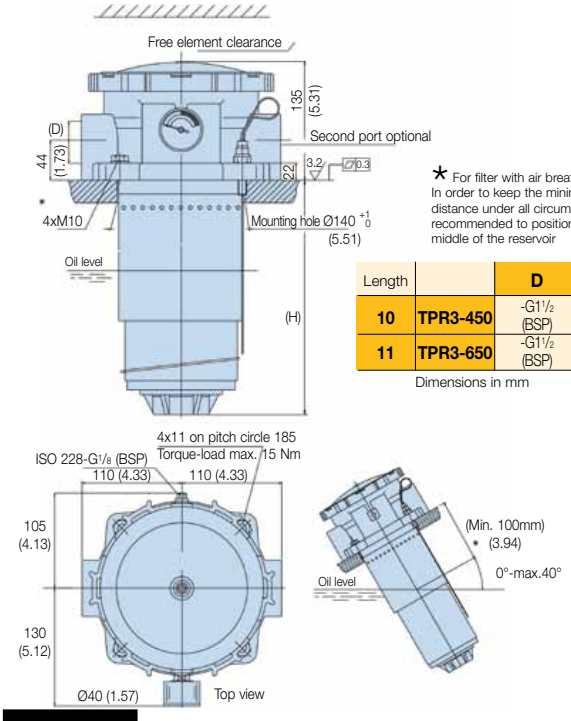

Length		D	H	F
10	TPR3-450	-G1½ (BSP)	415 (16.34)	345 (13.58)
11	TPR3-650	-G1½ (BSP)	600 (23.62)	530 (20.87)

Dimensions in mm

* For filter with air breather:
In order to keep the minimum required distance under all circumstances, it is recommended to position the filter in the middle of the reservoir

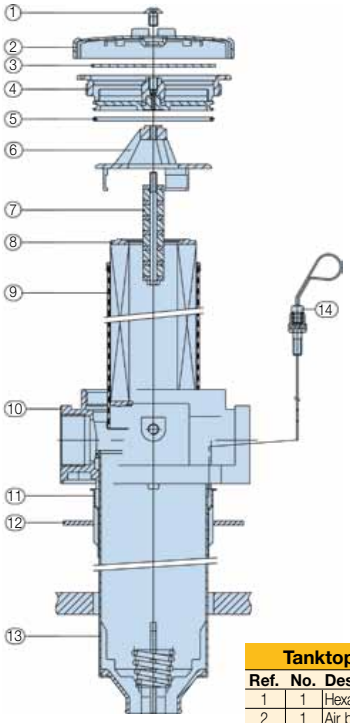

Tanktopper II & III

Ref.	No.	Description
1	1	Hexagon socket bolt M8
2	1	Air breather cap
3	1	Air breather filter medium
4	1	Cover (assembly)
5	1	Cover seal
6	1	Bridge
7	1	Magnet set
8	1	Element
9	1	Sleeve
10	1	Filter house
11	1	Airguide
12	1	Tank gasket
13	1	Funnel
14	1	Dipstick assembly

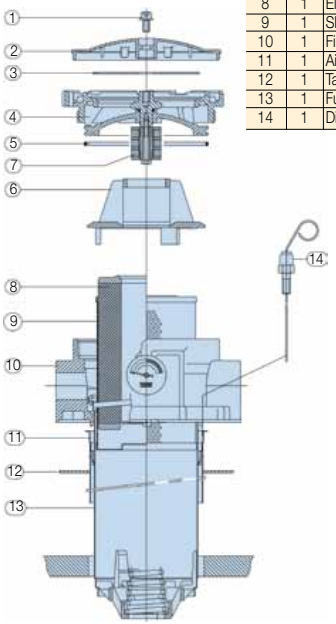

Tanktopper Series I & II

Tanktop Mounted Return Line Filters with Integrated Air Breather

Pressure Drop Curves - Tanktopper I

Filter housing and element pressure drop based on 32cSt fluid viscosity and 0.87 density.

TPR40 Empty Housing (Length code 1)

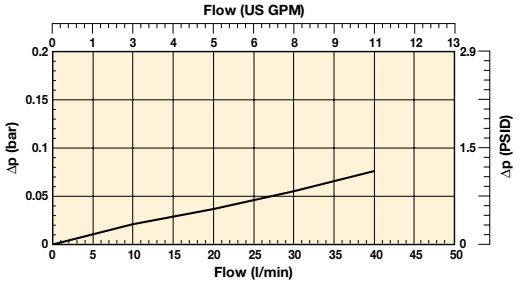

TPR80 Empty Housing (Length code 2)

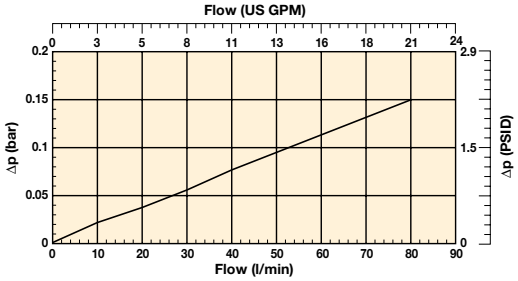

TPR40 (Element length code 1)

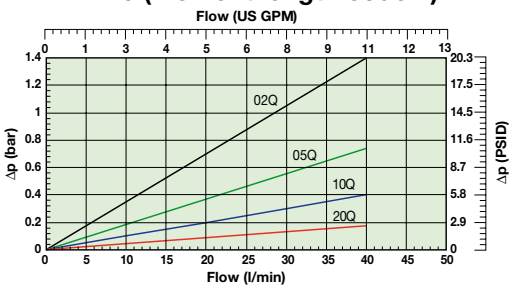

TPR80 (Element length code 2)

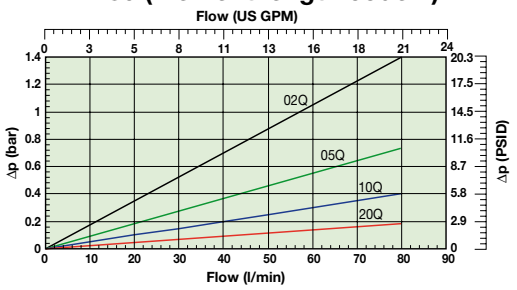

TPR40 (Element length code 1)
(cellulose and stainless steel)

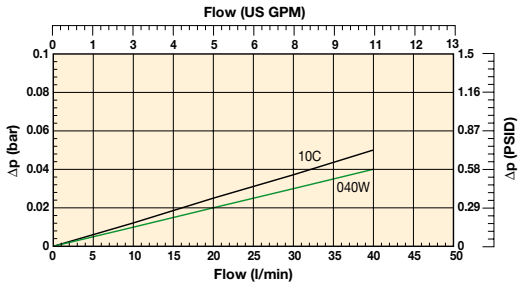

TPR80 (Element length code 2)
(cellulose and stainless steel)

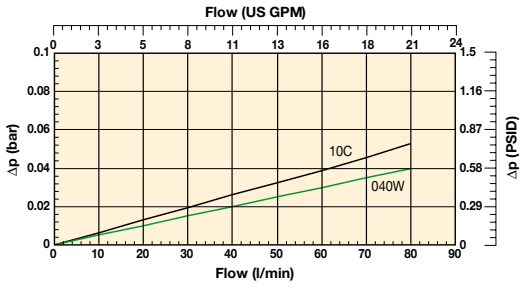

Pressure Drop Curves - Tanktopper II

Filter housing and element pressure drop based on 32cSt fluid viscosity and 0.87 density.

TPR II Empty Housing with G1¼" ports (Length code 5, 6 and 7)

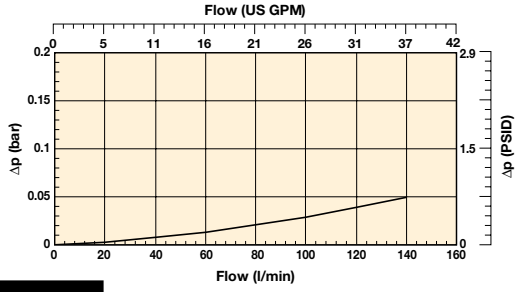

TPR II Empty Housing with G1½" ports (Length code 5, 6 and 7)

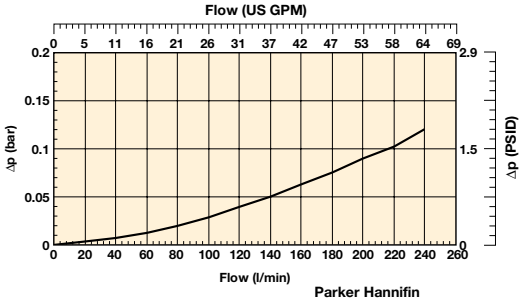

Tanktopper Series II & III

Tanktop Mounted Return Line Filters with Integrated Air Breather

Pressure Drop Curves - Tanktopper II (cont.)

Filter housing and element pressure drop based on 32cSt fluid viscosity and 0.87 density.

TPR120 (Element length code 5)

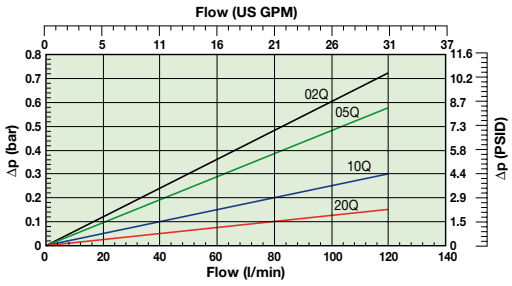

TPR200 (Element length code 6)

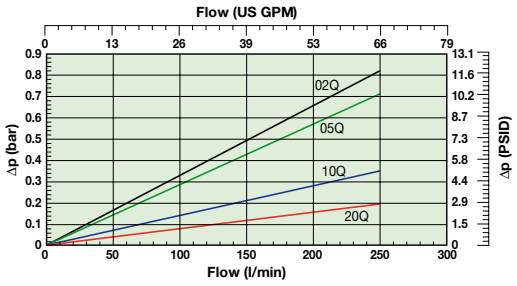

TPR250 (Element length code 7)

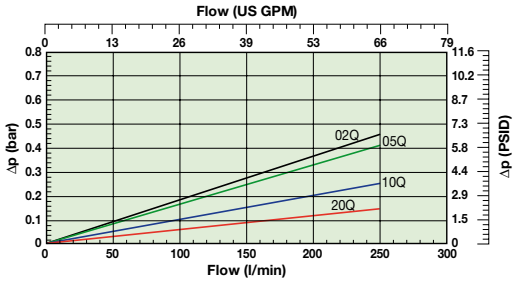

Pressure Drop Curves - Tanktopper III

Filter housing and element pressure drop based on 32cSt fluid viscosity and 0.87 density.

TPR III Empty Housing with G1½" ports (Length code 10 and 11)

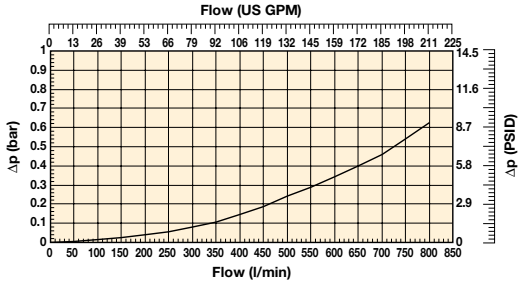

TPR450 (Element length code 10)

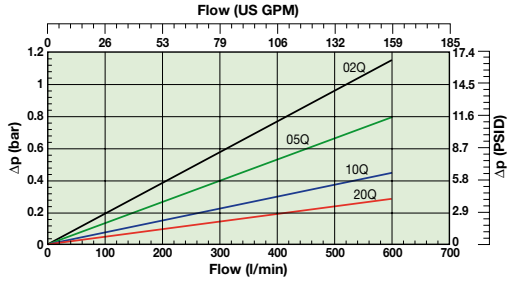

TPR650 (Element length code 11)

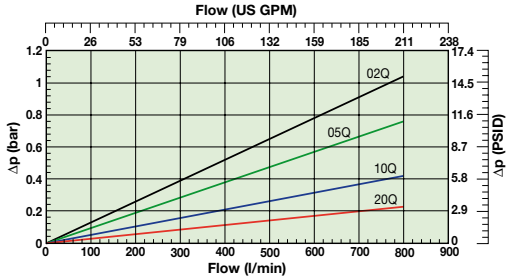

Tanktopper Series I, II & III

Tanktop Mounted Return Line Filters with Integrated Air Breather

Ordering Information

Standard products table

Part number	Supersedes	Flow (l/min)	Model number	Element length	Media rating (µ)	Seals	Indicator	Bypass settings	Ports	Included options	Replacement elements	Supersedes
TPR110QLBP2EG12E	TPR40-G3/4 PXWL1-10 B15 MM MA	40	TPR40	Length 1	10	Nitrile	Plugged	1.5 Bar (22 Psi)	G3/4	Magnets	**937902Q**	PXWL1-10
TPR120QLBP2EG12E	TPR40-G3/4 PXWL1-20 B15 MM MA	40	TPR40	Length 1	20	Nitrile	Plugged	1.5 Bar (22 Psi)	G3/4	Magnets	**937904Q**	PXWL1-20
TPR210QLBP2EG12L	TPR80-G3/4 PXWL2-10 AB15 MM MA	80	TPR80	Length 2	10	Nitrile	Plugged	1.5 Bar (22 Psi)	G3/4	Aluminium funnel, magnets	**937903Q**	PXWL2-10
TPR220QLBP2EG12L	TPR80-G3/4 PXWL2-20 AB15 MM MA	80	TPR80	Length 2	20	Nitrile	Plugged	1.5 Bar (22 Psi)	G3/4	Aluminium funnel, magnets	**937905Q**	PXWL2-20
TPR510QLBP2E2G201	TPR120-2G1 1/4 PXWL3-10 B15 MM	120	TPR120	Length 5	10	Nitrile	Plugged	1.5 Bar (22 Psi)	2xG1 1/4	None	**937892Q**	PXWL3-10
TPR520QLBP2E2G201	TPR120-2G1 1/4 PXWL3-20 B15 MM	120	TPR120	Length 5	20	Nitrile	Plugged	1.5 Bar (22 Psi)	2xG1 1/4	None	**937895Q**	PXWL3-20
TPR710QLBP2E2G241	TPR250-2G1 1/2 PXWL4A-10 B15 MM	250	TPR250	Length 7	10	Nitrile	Plugged	1.5 Bar (22 Psi)	2xG1 1/2	None	**937894Q**	PXWL4A-10
TPR720QLBP2E2G241	TPR250-2G1 1/2 PXWL4A-20 B15 MM	250	TPR250	Length 7	20	Nitrile	Plugged	1.5 Bar (22 Psi)	2xG1 1/2	None	**937897Q**	PXWL4A-20
TPR1110QLBP2E2G241	TPR650-2G1 1/2 PXWL8-10 B15 MM	650	TPR650	Length 11	10	Nitrile	Plugged	1.5 Bar (22 Psi)	2xG1 1/2	None	**937914Q**	PXWL8-10
TPR1120QLBP2E2G241	TPR650-2G1 1/2 PXWL8-20 B15 MM	650	TPR650	Length 11	20	Nitrile	Plugged	1.5 Bar (22 Psi)	2xG1 1/2	None	**937917Q**	PXWL8-20

Note: Filter assemblies ordered from the product configurator below are on extended lead times. Where possible, please make your selection from the table above.

Visual indicator	
Thread connection	G1/8
Code	FMUG2EBPG02L

Specifications	
Elec.rating	42V / 2A
Thread connection	G1/8
Elec.connection	AMP terminal 6.3x0.8
Protection	IP65 (terminal IP00)
Switch type	NO or NC
Code	FMUS2EBMG02L (NO switch)
	FMUS3EBMG02L (NC switch)

Normally open contacts



Normally closed contacts



Product configurator

Configurator example TPR filter

Box 1	Box 2	Box 3	Box 4	Box 5	Box 6	Box 7	Box 8
TPR	**2**	**05QL**	**B**	**S2**	**E**	**G12**	**L**

Box 1

Code
TPR

Box 2

Filter type	
Housing	**Code**
TPR 1-40	**1**
TPR 1-80	**2**
TPR 2-120	**5**
TPR 2-200	6
TPR 2-250	**7**
TPR 3-450	10
TPR 3-650	**11**

Box 3

Degree of filtration						
Element media		**Glass fibre**				
		Microglass III (for disposable elements)				
	Cellulose	Ecoglass III (for *LEIF*® elements)				**Wire mesh**
	Nom. rating					Abs. rating
Disposable element (TPR I only)	10C	02Q	05Q	**10Q**	**20Q**	040W
***LEIF*® element (for all TPR Filters)**		02QL	**05QL**	**10QL**	**20QL**	

Box 4

Seal type	
Seal material	**Code**
Nitrile	**B**
Fluoroelastomer	on request

Box 5

Indicator	
	Code
Pressure gauge, setting 1.2 bar, G1/8	**G2**
Pressure switch 42V, 1.2 bar setting, NO with G1/8	**S2**
Pressure switch 42V, 1.2 bar setting, NC with G1/8	S3
Pressure switch 250V, NO/NC with G1/8	S4
No indicator, indicator ports not machined	on request
No indicator, indicator port R plugged	on request
No indicator, indicator ports L + R plugged	**P2**
Other settings for indicators / gauges on request	on request

Box 6

Bypass valve	
Bypass valve	**Code**
0.8 bar	B
1.5 bar	**E**
2.5 bar (TPR 1 Series only)	on request
Other bypass settings	on request

Note 1: Part numbers featured with bold highlighted codes will ensure a 'standard' product selection.
Note 2: Alternate displayed part number selection will require you to contact Parker Filtration for availability.

Box 7

Filter connection	
Ports	**Code**
G3/4 (BSP) (TPR 1 Series)	**G12**
SAE12 (TPR 1 Series)	S12
G1 1/4 (BSP) (TPR 2 Series)	G20
2 x ISO 228-G1 1/4 (BSP) (TPR 2 Series)	**2G20**
SAE 20 (TPR 2 Series)	S20
2 x SAE 20 (TPR 2 Series)	2S20
SAE 24 (TPR 2 Series)	S24
2 x SAE 24 (TPR 2 Series)	2S24
G1 1/2 (BSP) (TPR 2 and 3 Series)	G24
2 x G1 1/2 (BSP) (TPR 2 and 3 Series)	**2G24**

Box 8

Options	
Options	**Code**
Standard	**1**
Dipstick	**6**
Aluminium funnel for TPR 1-80	J
Magnets for TPR 1 Series	**E**
Magnets + Dipstick for TPR 1 Series	K
Magnets + Aluminium Funnel for TPR 80 Series	**L**
Magnets + Aluminium Funnel + Dipstick for TPR 80 Series	M
Other combinations	on request

Note: Tanktopper I Series are standard supplied with POM type funnel. Aluminium funnel is recommended for heavy duty applications, sensitivity for electrostatically charging or high fluid temperatures.
Tanktopper II and III Series are always supplied with metal funnel.

Highlights Key (Denotes part number availability)

123	Item is standard
123	Item is standard green option
123	Item is semi standard
123	Item is non standard

Parker Hannifin
Hydraulic Filter Division Europe
FDHB500UK/Tanktopper

Tel: +45 63 12 83 00 | Email: ps@hymatik.com | www.hymatik.com | Hvidkaervej 27a, DK-5250 Odense SV, Denmark

Tanktopper Series I, II & III

Tanktop Mounted Return Line Filters with Integrated Air Breather

Ordering Information (cont.)

Degree of filtration						Media code
Average filtration beta ratio ß (ISO 16889) / particle size µm [c]						
ßx(c)=2	ßx(c)=10	ßx(c)=75	ßx(c)=100	ßx(c)=200	ßx(c)=1000	
% efficiency, based on the above beta ratio (ßx)						
50.0%	90.0%	98.7%	99.0%	99.5%	99.9%	
N/A	N/A	N/A	N/A	N/A	4.5	**02Q/02QL**
N/A	N/A	4.5	5	6	7	**05Q/05QL**
N/A	6	8.5	9	10	12	**10Q/10QL**
6	11	17	18	20	22	**20Q/20QL**

Supersedes spare element table				
TPR 1-40	PXWL1-2	PXWL1-5	PXWL1-10	PXWL1-20
Part number spare element	937898Q	937900Q	937902Q	937904Q
TPR 1-80	PXWL2-2	PXWL2-5	PXWL2-10	PXWL2-20
Part number spare element	937899Q	937901Q	937903Q	937905Q
TPR 2-120	PXWL3-2	PXWL3-5	PXWL3-10	PXWL3-20
Part number spare element	937886Q	937889Q	937892Q	937895Q
TPR 2-200	PXWL4-2	PXWL4-5	PXWL4-10	PXWL4-20
Part number spare element	937887Q	937890Q	937893Q	937896Q
TPR 2-250	PXWL4A-2	PXWL4A-5	PXWL4A-10	PXWL4A-20
Part number spare element	937888Q	937891Q	937894Q	937897Q
TPR 3-250	PXWL6-2	PXWL6-5	PXWL6-10	PXWL6-20
Part number spare element	937906Q	937909Q	937912Q	937915Q
TPR 3-450	PXWL7-2	PXWL7-5	PXWL7-10	PXWL7-20
Part number spare element	937907Q	937910Q	937913Q	937916Q
TPR 3-650	PXWL8-2	PXWL8-5	PXWL8-10	PXWL8-20
Part number spare element	937908Q	937911Q	937914Q	937917Q

Supersedes spare element table						
TPR 1-40	PXX1A-10	PXW1A-2	PXW1A-5	PXW1A-10	PXW1A-20	PS1A-40
Part number spare element	937918	937920Q	937925Q	937930Q	937935Q	937940
TPR 1-80	PXX2A-10	PXW2A-2	PXW2A-5	PXW2A-10	PXW2A-20	PS2A-40
Part number spare element	937919	937921Q	937926Q	937931Q	937936Q	937941
TPR 3-160		PXW5-2	PXW5-5	PXW5-10	PXW5-20	
Part number spare element		937922Q	937927Q	937932Q	937937Q	
TPR 3-250		PXW6-2	PXW6-5	PXW6-10	PXW6-20	
Part number spare element		937923Q	937928Q	937933Q	937938Q	
TPR 3-450		PXW7-2	PXW7-5	PXW7-10	PXW7-20	
Part number spare element		937924Q	937929Q	937934Q	937939Q	

Tank Topper Series Seal Kits	
Part Number	**Description**
2049010052	NITRILE SEAL KIT TPR1 AG FUNNEL ALU
2049010050	NITRILE SEAL KIT TPR1 AG FUNNEL POM
2049010053	NITRILE SEAL KIT TPR1 NO AG FUNNEL ALU
2049010051	NITRILE SEAL KIT TPR1 NO AG FUNNEL POM
2049010056	NITRILE SEAL KIT TPR2 B
2049010027	NITRILE SEAL KIT TPR3 B
	AG = Air Guide

Suction Return Series

Tanktop Mounted Suction & Return Line Filters - Types SR1 & SR2
Max. 250 l/min - 10 bar



Filters both open and closed loop oil circuits through one filter

Reduced risk of pump cavitation

SR1 and SR2 are capable of feeding filtered oil under positive pressure to the suction side of the boost pump filtering both open and closed loop oil systems through one filter. Maximum pressure 10 bar. Maximum flow 250 l/min. Use *LEIF*® environmentally friendly elements.



Contact Information:

Parker Hannifin
Hydraulic Filter Division Europe

European Product Information Centre
Freephone: 00800 27 27 5374
(from AT, BE, CH, CZ, DE, EE, ES, FI, FR, IE, IT, PT, SE, SK, UK)
filtrationinfo@parker.com

www.parker.com/hfde

Product Features:

- SR capable of feeding filtered oil under positive pressure to the suction side of the boost pump.
- Filters both open and closed loop oil systems through one filter.
- Maximum pressure 10 bar. Maximum flow 250 l/min.
- SR uses patented *LEIF*® elements to safeguard filtration quality.

Suction Return Series

Tanktop Mounted Suction & Return Line Filters - Types SR1 & SR2

Features & Benefits

Features	Advantages	Benefits
Compact design	Less space required to apply SR Series	Improved flexibility during system design
Bypass valve mounted in series with back-pressure valve	Pressurisation of filtered oil for hydrostatic drive ensured during bypass	Lower risk of pump cavition
		No direct bypass in the tank reducing the additional risk of oil foaming
LEIF® elements	Element safeguards the use of genuine parts	Guaranteed quality of filtration
		Contributes to ISO 14001 certification
Strainer located in filter head	Strainer filters all bypass fluid by using a system-matched degree of filtration	Improved protection of system
		Strainer can be inspected and cleaned during service events
High level of customisation	Dedicated system-matched solutions can be easily made available	Improved integration of filter in system combined with lower initial system costs
Quick response bypass with low hysteresis	Reduction of bypass period due to low hysteresis	Improved protection of system
	Only a small part of the total flow is bypassing the element	
Standard or customised funnel	Ensures that oil enters the tank under the oil level	Significant reduction of oil foaming
Multiple ports availability	Flexibility related to suction- and return line hose(s) arrangement	More compact solutions can be realised
		The use of manifold blocks can be avoided
		Easy to integrate with cooler circuit

Typical Applications

Mobile equipment with both open and closed hydraulic circuits. For example:

- Road sweepers
- Road rollers
- Fork lift trucks
- Loading shovels
- Telescopic handlers
- Dump trucks
- Skid steers
- Agricultural harvesting machines
- Mini excavators

The Parker Filtration Tank Top Mounted Suction & Return Line Filters.

A tank top mounted return filter capable of feeding filtered oil under positive pressure to the suction side of the boost pump, thereby filtering both open and closed loop oil systems through one filter. The Parker SR filters use the *LEIF*® element for environmental-friendly filtration and offers protection against the use of pirate elements. Several options including integrated suction strainer and dipstick are available.

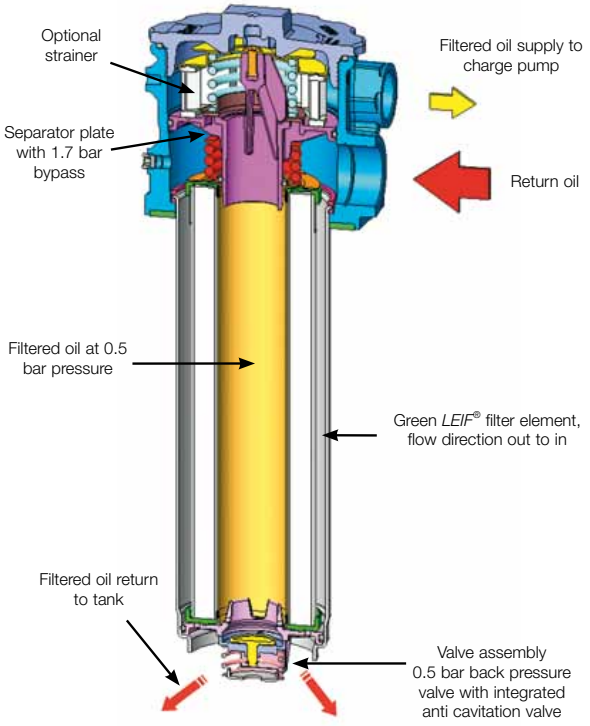

Tel: +45 63 12 83 00 | Email: ps@hymatik.com | www.hymatik.com | Hvidkaervej 27a, DK-5250 Odense SV, Denmark

Specification

Pressure ratings:
Max. 10 bar.

Assembly:
Tank top mounted filters.

Connections:
Return port G1 (to BS 2779). } SR1
Suction port G3/4 (to BS 2779).

Return port G1 1/4 (ISO 228) or SAE20: } SR2
Optional second return port type SR2.
Suction port G1 (ISO 228) or SAE16:
Standard two suction ports.

Seal material:
Type SR1 – Nitrile.
Type SR2 – Nitrile, Fluoroelastomer.
Other seal material on request.

Operating temperature range:
-30° to +110°C.

Bypass valve system:
Main system bypass valve.
Type SR1 – 1.7 bar (2.5 bar optional).
Type SR2 – 1.7 bar (2.5 bar optional).

Degree of filtration:
Determined by multipass test according to ISO 16889.

Flow fatigue characteristics:
Filter media designed to optimise fatigue life.

Filtration media:
Type SR1 and SR2 –
Ecoglass III for *LEIF*® elements. See 'degree of filtration' table on the Ordering Information page.
- High dirt holding capacity.
- Low pressure drop.
- Extended service life.

Element collapse rating:
Type SR1 – 10 bar (ISO2941).
Type SR2 – 10 bar (ISO2941).

Suction line:
Back-pressure valve setting 0.5 bar (nominal).

Anti-cavitation:
Emergency suction valve fitted as standard.

Construction:

	Type SR1 and Type SR2	
Filter Housing:	Precision pressure die casting	
Cover:	Glass reinforced nylon (high impact and temperature resistant)	
Weight:	1.4Kg	3.3Kg
Filter element:	*LEIF*® element with reusable metal element sleeve. The patented *LEIF*® concept contributes to ISO14001 and can be applied with mineral and HEES type fluids. For other fluid types consult Parker Filtration.	} SR1 & SR2

Circuit Application Example

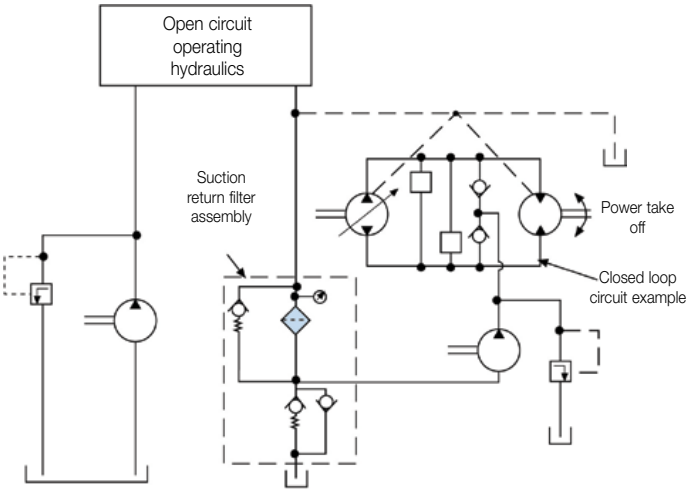

Note: Suction return filter without optional strainer.

Suction Return Filter: Hydraulic Circuit

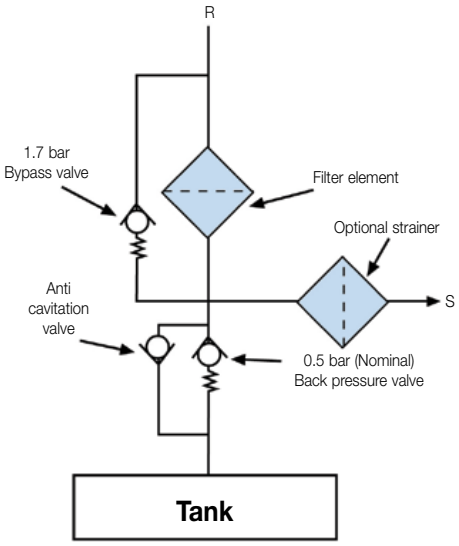

Note: Suction return filter with optional strainer.

Suction Return Series

Tanktop Mounted Suction & Return Line Filters - Types SR1 & SR2

SR1

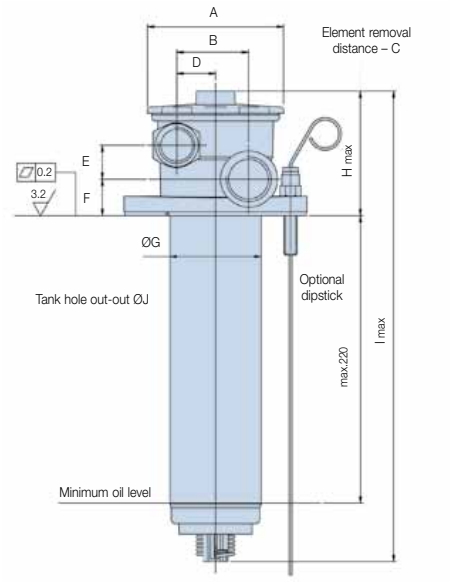

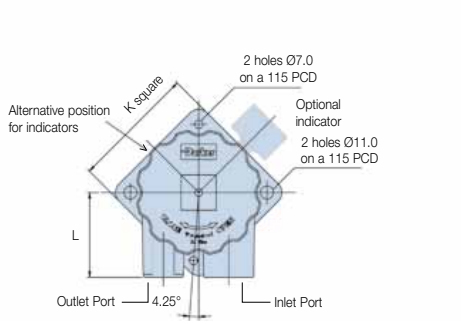

SR2

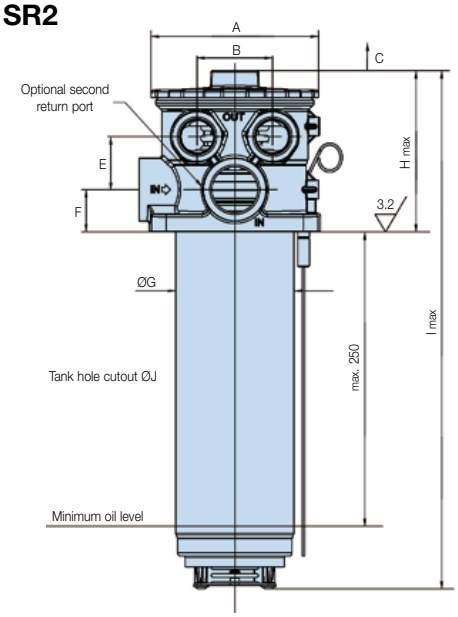

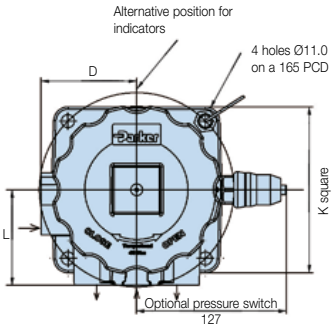

Dimensions mm (inches)	A	B	C	D	E	F	G	H	I	J	K	L
Type SRL1	106 (4.17)	55 (2.17)	280 (11.0)	29.75 (1.17)	26 (1.02)	28 (1.10)	70 (2.76)	96 (3.78)	361 (14.21)	71 to 73 (2.8 to 2.87)	105 (4.13)	72 (2.83)
Type SRL2	142 (5.59)	64 (2.52)	380 (14.96)	81 (3.19)	45 (1.77)	36 (1.42)	100 (3.94)	137 (5.39)	440 (17.32)	101 to 103 (3.98 to 4.06)	145 (5.71)	81 (3.19)

Element removal distance for dimension C.

Parker Hannifin
Hydraulic Filter Division Europe
FDHB500UK/SR

Indicator Details

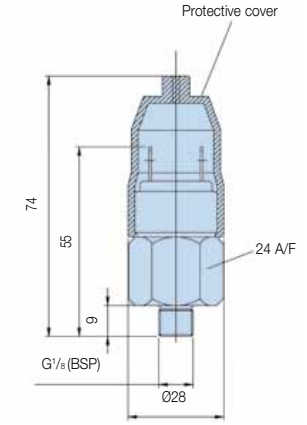

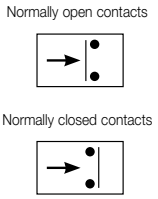

Visual Indicator	
Setting	2 bar
Thread connection	G1/8
Code	FMUG5HBMG02L

Pressure switch	
Elec.rating	42V / 2A
Thread connection	G1/8
Elec.connection	AMP terminal 6.3 x 0.8
Protection	IP65 (terminal IP00)
Setting	2 bar
Switch type	NO or NC
Code	FMUS6HBMG02L (NO switch)
	FMUS7HBMG02L (NC switch)

Note: Vacuum indicators visual or electrical are available on request for filter type SR2 only.

Principles of Operation

Suction Return Series filter
This one filter assembly is designed to carry out two specific functions:
(1) Filter system return line oil.
(2) Supply filtered oil under positive pressure to the closed loop hydrostatic circuits.

Principles of operation
(1) Return oil from both the open and closed circuits* is fed into the Suction Return Series Filter at port 'R'.
(2) The filtered oil is maintained at a nominal 0.5 bar by the unique back pressure valve assembly and fed into the closed loop hydrostatic circuit via port 'S'.
(3) Surplus filtered oil is fed back to the tank via the back pressure valve assembly.
(4) Emergency suction (anti-cavitation) valve: This valve is fitted as standard to ensure oil is always available to the closed loop system, even on emergency occasions when the return flows do not meet the flow demands of the closed loop circuit.

Additional installation guidance notes
(1) Return oil flow should always be greater than the oil flow rate demanded by the closed loop charge pump.
(2) Oil level at all times should not fall below valve assembly at the base of the filter bowl.

Benefits
(1) Only one filter is required to supply filtered oil to both open and closed loop circuits.
(2) Feeding the closed loop circuit with filtered oil at a nominal pressure of 0.5 bar ensures excellent cold start characteristics, thus reducing the risk of cavitation.
(3) Four hole mounting with gasket seal.
(4) Microglass III filter element materials ensure; low pressure drop, high dirt holding capacity and extended service life.
(5) Type Parker SR filters with patented *LEIF*® element, unique drain construction, quick element replacement concept.

CAUTION:
Back pressure in pump and motor drain lines should always be kept at a minimum thus protecting shaft seals etc.
If case drain oils are to be fed through the return line filter please consult the pump/motor manufactures for details on maximum allowable back pressure.
Ensure filter elements are replaced when element condition indicators show that the bypass setting has been reached.
Failure to observe the above operation and guidance notes, or use of non genuine Parker specified filter elements could cause damage to the system. System designers should always ensure that adequate cooling capacity is available.

Tel: +45 63 12 83 00 | Email: ps@hymatik.com | www.hymatik.com | Hvidkaervej 27a, DK-5250 Odense SV, Denmark

Suction Return Series

Tanktop Mounted Suction & Return Line Filters - Types SR1 & SR2

Pressure Drop Curves (Type SR1)

The recommended level of the initial pressure drop is approximately 1 bar.
If the medium used has a viscosity different from 32cSt, pressure drop over the filter can be estimated as follows:
The total Δp = Housing Δph + (Element Δpe x working viscosity/32).

SRL1 Empty Housing (Length Code 2)

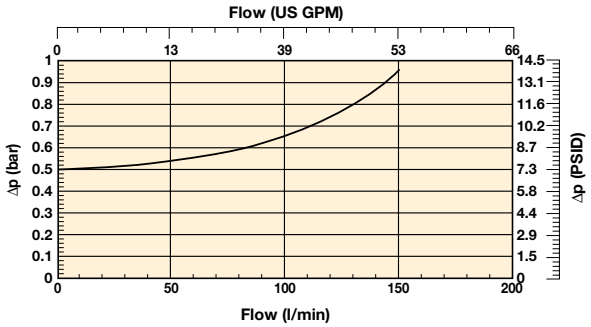

SRL1 (Element Length Code 2)

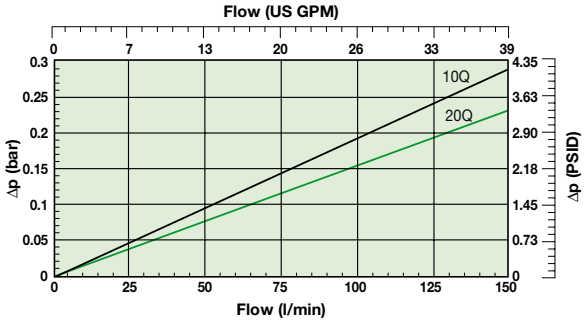

Curves are based on 32cSt fluid viscosity and 0.87 Kg/l density.
Line represents the Δp of the housing including the back pressure valve.

Pressure Drop Curves (Type SR2)

Curves are based on 32cSt fluid viscosity and 0.87 Kg/l density.

SRL2 Empty Filter Housing

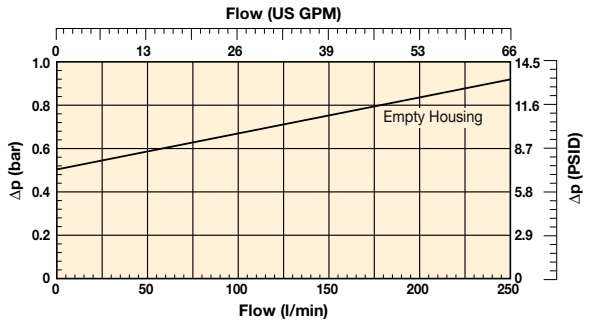

SRL2 Filter Element Length 2

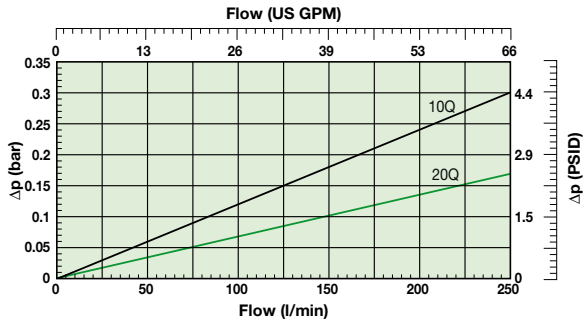

Line represents the Δp of the housing including the back pressure valve.

Tel: +45 63 12 83 00 | Email: ps@hymatik.com | www.hymatik.com | Hvidkaervej 27a, DK-5250 Odense SV, Denmark

Ordering Information

Standard products table

Part number	Supersedes	Flow (l/min)	Model number	Element length	Media rating (µ)	Seals	Indicator	Bypass settings	Ports return	Ports suction	Included options	Replacement elements	Supersedes
SRL1210QLBPGG161		130	SRL1	Length 2	10	Nitrile	Plugged	1.7 Bar (25 Psi)	G1	G¾	None	**937984Q**	SRE12Q10
SRL1220QLBPGG161		130	SRL1	Length 2	20	Nitrile	Plugged	1.7 Bar (25 Psi)	G1	G¾	None	**937985Q**	SRE12Q20
SRL2210QLBPGG201	SRL22Q10NP1B10	250	SRL2	Length 2	10	Nitrile	Plugged	1.7 Bar (25 Psi)	G1¼	2xG1	None	**937946Q**	SRE22Q10
SRL2220QLBPGG201	SRL22Q20NP1B10	250	SRL2	Length 2	20	Nitrile	Plugged	1.7 Bar (25 Psi)	G1¼	2xG1	None	**937947Q**	SRE22Q20

Note: Filter assemblies ordered from the product configurator below are on extended lead times. Where possible, please make your selection from the table above.

Product configurator

Configurator example SR filter

Box 1	Box 2	Box 3	Box 4	Box 5	Box 6	Box 7	Box 8
SRL2	**2**	**05QL**	**B**	**S6**	**G**	**2G20**	**I**

Box 1

Code	
Model	**Code**
SR1 Series with *LEIF*® element	**SRL1**
SR2 Series with *LEIF*® element	**SRL2**

Highlights Key (Denotes part number availability)

123	Item is standard
123	Item is standard green option
123	Item is semi standard
123	Item is non standard

Box 2

Filter type	
Housing	**Code**
Reduced length	on request
Standard length	**2**
Extended length	on request

Box 3

Degree of filtration				
Element				
	***LEIF*®**			
	Q3 glassfibre ßx(c) >200			
	Code	**Code**	**Code**	**Code**
***LEIF*®**	02QL	**05QL**	**10QL**	**20QL**

Box 4

Seal type	
Seal material	**Code**
Nitrile	**B**
Fluoroelastomer	V

Box 5

Indicator	
	Code
Pressure gauge, setting 2.0 bar, G⅛	**G5**
Pressure switch 42V, 2.0 bar setting, NO with G⅛ BSP	**S6**
Pressure switch 42V, 2.0 bar setting, NC with G⅛ BSP	S7
Pressure switch 250V, NO/NC with G⅛	on request
No indicator, indicator port L + R plugged	**P**
Vacuum switch / vacuum gauge	on request
Other settings for indicators / gauges on request	on request

Box 6

Bypass valve	
Bypass valve	**Code**
1.7 bar	**G**
2.5 bar	I
Blocked bypass	on request
Other bypass settings	on request

Box 7

Filter connection		
Ports	**Code**	**Note**
Return port 1 x G1 (ISO228) + Suction port 1 x G¾ (ISO228)	**G16**	**SRL1**
Return port 1 x G1¼ (ISO228) + Suction port 2 x G1 (ISO228)	**G20**	**SRL2**
Return port 2 x G1¼ (ISO228) + Suction port 2 x G1 (ISO228)	**2G20**	**SRL2**
Return port 1 x SAE20 + Suction port 2 x SAE16	S20	**SRL2**
Return port 2 x SAE20 + Suction port 2 x SAE16	2S20	**SRL2**

Box 8

Options	
Options	**Code**
None	**1**
Strainer 120 micron	**G**
Dipstick	6
Plugged vent port in cover (on request)	on request
Strainer 120 micron, dipstick and plugged vent port	I
Customized options	on request

Degree of filtration						Media code
Average filtration beta ratio ß (ISO 16889) / particle size µm [c]						
ßx(c)=2	**ßx(c)=10**	**ßx(c)=75**	**ßx(c)=100**	**ßx(c)=200**	**ßx(c)=1000**	
% efficiency, based on the above beta ratio (ßx)						
50.0%	**90.0%**	**98.7%**	**99.0%**	**99.5%**	**99.9%**	
N/A	N/A	N/A	N/A	N/A	4.5	**02Q/02QL**
N/A	N/A	4.5	5	6	7	**05Q/05QL**
N/A	6	8.5	9	10	12	**10Q/10QL**
6	11	17	18	20	22	**20Q/20QL**

Note 1: Part numbers featured with bold highlighted codes will ensure a 'standard' product selection.
Note 2: Alternate displayed part number selection will require you to contact Parker Filtration for availability.

Spare elements		
Replacement elements	**Supersedes**	
937942Q	SRR12Q05N	Semi standard
937943Q	SRR12Q10N	Standard
937944Q	SRR12Q20N	Standard
937945Q	SRE22Q05	Semi standard
937946Q	SRE22Q10	Standard
937947Q	SRE22Q20	Standard
937983Q	SRE12Q05	Semi standard
937984Q	SRE12Q10	Standard
937985Q	SRE12Q20	Standard

Suction Return - Series Seal Kits	
Part Number	**Description**
2049010065	NITRILE SEAL KIT SRL1
2049010061	NITRILE SEAL KIT SRL2

Parker Hannifin
Hydraulic Filter Division Europe
FDHB500UK/SR





Parker E-Series

Ensure that the impact for the environment is minimized.

The development of filter products for Parker is an on-going process driven by the needs of the customer and the protection of our fragile planet.

E-Series filters are Parker's positive contribution to help minimize the impact on the environment with *LEIF*® Low Environmental Impact Filters and the Ecoglass III elements. Product ranges that together will help reduce disposal volumes and costs.

For more information on Parker Filtration's hydraulic environmental solutions, contact us today.

E-Series

Low Pressure Filters
***LEIF*® elements**

- Up to 1500 l/min
- Patented design
- Re-usable element sleeve
- Contributes to ISO 14001
- *LEIF*® elements contain Ecoglass III media

Medium & High Pressure Filters
Ecoglass III elements

- Medium pressure up to 1400 l/min
- High pressure up to 450 l/min
- Re-usable support tube
- Contributes to ISO 14001
- Ecoglass III media

Parker

Parker Hannifin
Hydraulic Filter Division Europe
FDHB500UK.

PT Tank Top Mounted filters

Max. 400 l/min - 10 bar



An economical alternative for quality tank top mounted filtration

In to out flow design avoids re-contamination of the hydraulic system

The PT tank top mounted filter features an aluminium filter head and screw-in style filter elements. This offers the opportunity to use the filter element as screw-in style for co-polymer reservoirs. With a Parker design that protects the quality of filtration, the PT offers a modularity and value for money.



Contact Information:

Parker Hannifin
Hydraulic Filter Division Europe

European Product Information Centre
Freephone: 00800 27 27 5374
(from AT, BE, CH, CZ, DE, EE, ES, FI, FR, IE, IT, PT, SE, SK, UK)
filtrationinfo@parker.com

www.parker.com/hfde

Product Features:

- Compact tank top mounted return line filter.
- Filter element can be used for direct screw-in mounting with co-polymer reservoirs.
- Parker quality filter element.
- In to Out flow avoids re-contamination of the system.
- Flow capability up to 400 l/min at 10 bar working pressure.

PT Tank Top Mounted filters

Max. 400 l/min - 10 bar

Features & Benefits

Features	Advantages	Benefits
Aluminium filter head	Low profile, lightweight and durable	Less weight, smaller envelope and cleaner appearance.
In-to-Out filtration	All captured contamination retains inside the element	No recontamination of the system during change of element
Disposable filter cartridge	Easy to change cartridge	New housing cover and seals provided with each element change
Microglass III media	Multi-layered design produces high capacity and efficiency	Reliable performance. Reduced downtime

Typical Applications

- Lorry mounted cranes
- Agricultural equipment
- Grass cutting equipment
- Container hook loaders



The Parker Filtration PT tank top mounted series

The PT Series filter is available in various sizes covering a flow rate up to 400 l/min. Using the Microglass III media in 2, 5, 10 and 20 microns it provides premium particle removal efficiency.

This unique design simply threads into a ported tank ring, which can be bolted to a metal reservoir.

The disposable filter cartridge is a single-piece construction, which incorporates the nylon cover and integral 1.7 bar bypass valve. The flow path is inside-out and requires no special tools for service.

This concept assures minimal installation costs with the least space requirements for return line applications.

Specification

Pressure ratings:
Max. 10 bar.

Connections
PT2: G¾" and G1"
PT4: G1"or G1¼"

Filter housing:
Aluminium

Filter element:
Parker design including cover for filter housing (one disposable unit)

Seal material:
Nitrile, viton

Operation temperature:
-20°C to + 100°C

Bypass:
1.7 bar

Degree of filtration:
Determined by multipass test in accordance to ISO16889

Flow fatigue:
Filter media is supported so that the optimal fatigue life is achieved (ISO3724)

Filter Media:
Microglass III

Indicator options:
Visual and electrical switch (NO/NC) type

Fluid compatibility:
Mineral and HEES type fluids

Principle of Filtration

The PT applies In-to-Out Filtration, this ensures that captured contamination is retained in the element during servicing the filter.
Bypass valve is integrated in the filter bottom element end cap. The filter element is completely disposable.

Safety First

Each spare filter element is including seals for the sealing between tank top mounted filter housing and filter element. Because all seals are pre-mounting, no risk that (incorrect) seals are not replaced.

PT Reservoir 'screw-in' solution to reduce costs and space

The PT applies In-to-Out Filtration, this ensures that captured contamination is retained. The PT element can be integrated directly into a co-polymer reservoir. Parker Filtration can provide cavity details to co-polymer reservoir manufacturers to support this innovative solution.

This cavity includes the integrated return line port and optional connection for the pressure switch.

Thanks to the complete screw-in style solution, typically over 30% of the first fit cost can be reduced, the reservoir surface remains flat and hence can support more compact solutions, in particular for mobile applications.

Compared to the traditional tank top mounted filter, improved sealing between the reservoir and the filter can be achieved, eliminating potential leakage areas by 50% typically.

Please consult Parker Filtration for engineered reservoir solutions



Installation Information

	'Build-in' length in tank (mm)
PT2 Length 1	95
PT2 Length 2	185
PT2 Length 3	280
PT4 Length 1	98
PT4 Length 2	189
PT4 Length 3	310

Tel: +45 63 12 83 00 | Email: ps@hymatik.com | www.hymatik.com | Hvidkaervej 27a, DK-5250 Odense SV, Denmark

PT Tank Top Mounted filters

Max. 400 l/min - 10 bar

Specification (cont)

PT2 Assembly without funnel

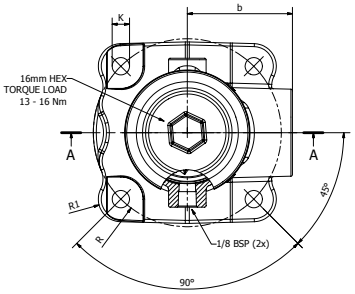

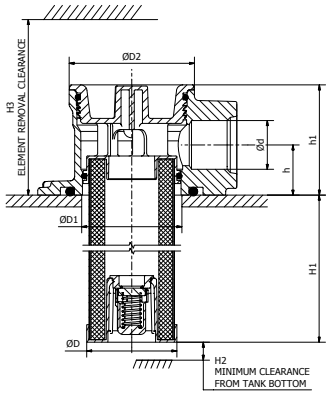

PT2 Screw-in Filter

Type	Connection Options	H1	H2	H3	h	h1	ØD	ØD1+/-0,5	ØD2	b	R	R1	K
PT2-1	G3/4, G1	89	6,5	190	25.4	56	Ø46	Ø51	Ø64	53	48	12	4x8.8
PT2-2	G3/4, G1	181	6.5	293	25.4	56	Ø46	Ø51	Ø64	53	48	12	4x8.8

PT2 Assembly with funnel

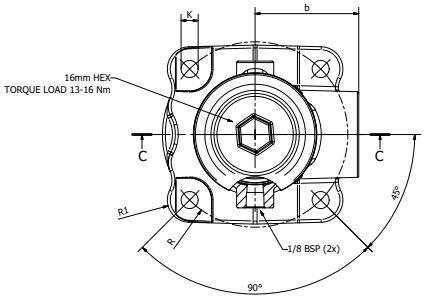

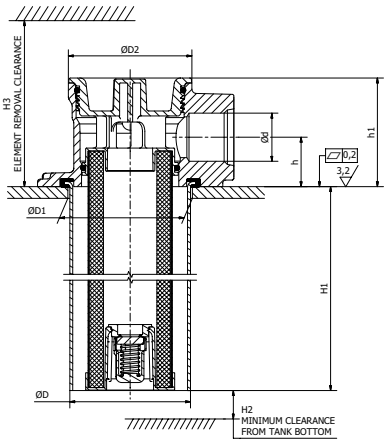

PT2 Screw-in Filter

Type	Connection Options	H1	H2	H3	h	h1	ØD	ØD1 +/–0,5	ØD2	b	R	R1	K
PT2-1	G3/4, G1	89	6,5	190	25.4	56	Ø62	Ø64	Ø64	53	48	12	4x8.8
PT2-2	G3/4, G1	181	6.5	293	25.4	56	Ø62	Ø64	Ø64	53	48	12	4x8.8

Tel: +45 63 12 83 00 | Email: ps@hymatik.com | www.hymatik.com | Hvidkaervej 27a, DK-5250 Odense SV, Denmark

Specification (cont)

PT4 Assembly without funnel

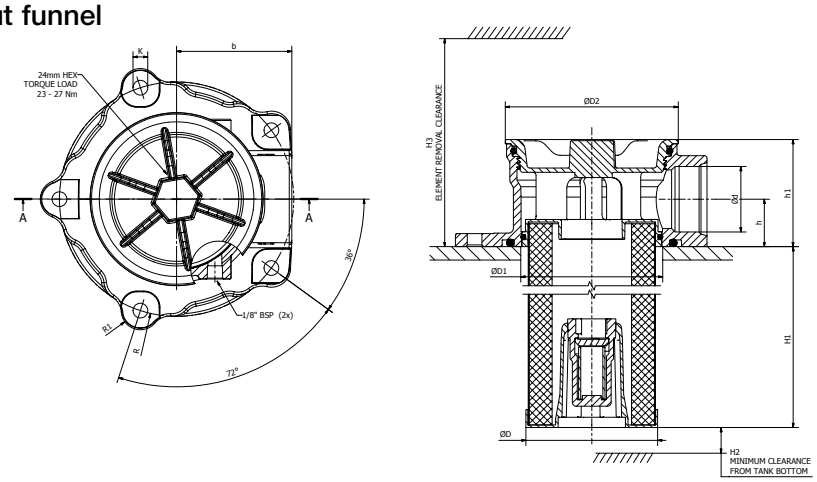

PT4 Screw-in Filter

Type	Connection Options	H1	H2	H3	h	h1	ØD	ØD1+/-0,5	ØD2	b	R	R1	K
PT4-1	G1, G1-1/4	94	10	222	28.2	64	Ø78.5	Ø85	Ø103	69	70	12	5xØ8.8
PT4-2	G1, G1-1/4	185	10	313	28.2	64	Ø78.5	Ø85	Ø103	69	70	12	5xØ8.8
PT4-3	G1, G1-1/4	306	10	434	28.2	64	Ø78.5	Ø85	Ø103	69	70	12	5xØ8.8

PT4 Assembly with funnel

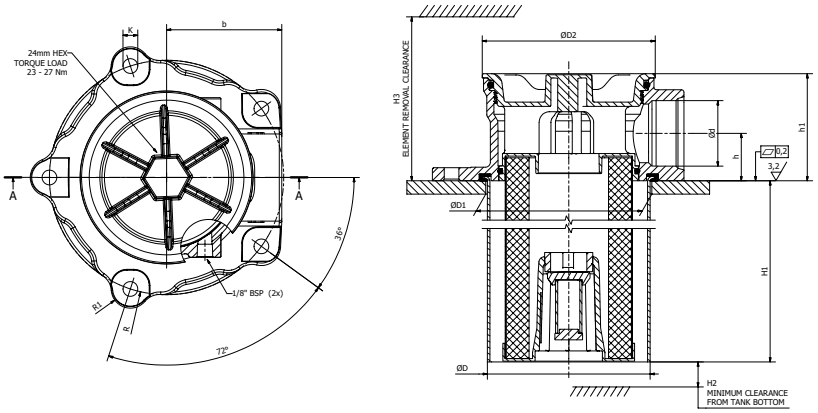

PT4 Screw-in Filter

Type	Connection Options	H1	H2	H3	h	h1	ØD	ØD1 +/–0,5	ØD2	b	R	R1	K
PT4-1	G1, G1-1/4	94	10	222	28.2	64	Ø97	Ø99	Ø103	69	70	12	5xØ8.8
PT4-2	G1, G1-1/4	185	10	313	28.2	64	Ø97	Ø99	Ø103	69	70	12	5xØ8.8
PT4-3	G1, G1-1/4	306	10	434	28.2	64	Ø97	Ø99	Ø103	69	70	12	5xØ8.8

Tel: +45 63 12 83 00 | Email: ps@hymatik.com | www.hymatik.com | Hvidkaervej 27a, DK-5250 Odense SV, Denmark

PT Tank Top Mounted filters

Max. 400 l/min - 10 bar

Pressure Drop Curves

Flow Performance Charts - PT2 Series

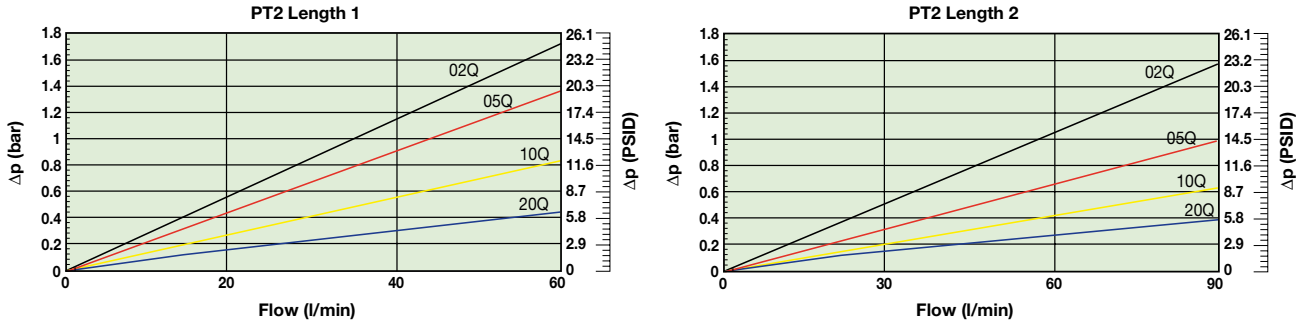

All delta-p values are based on 30 cSt fluid and 0,87 kg/l density

Flow Performance Charts - PT4 Series

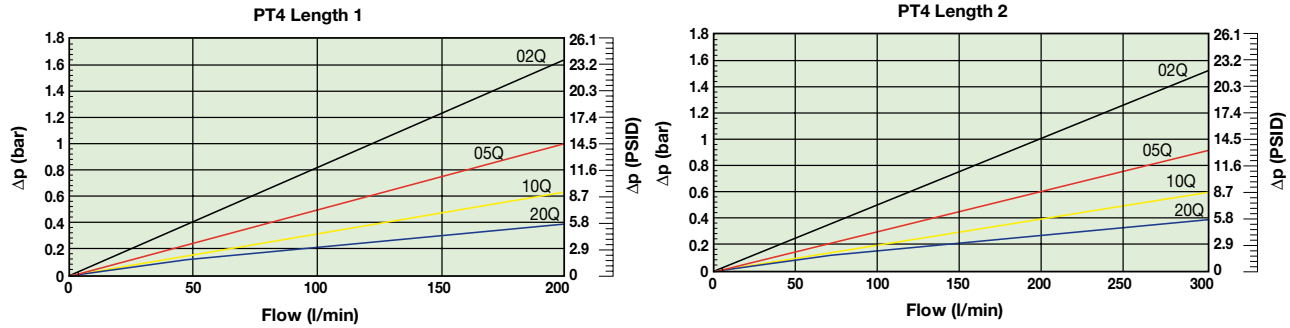

Parker Hannifin
Hydraulic Filter Division Europe
FDHB500UK/PT

Flow Performance Charts - PT4 Series

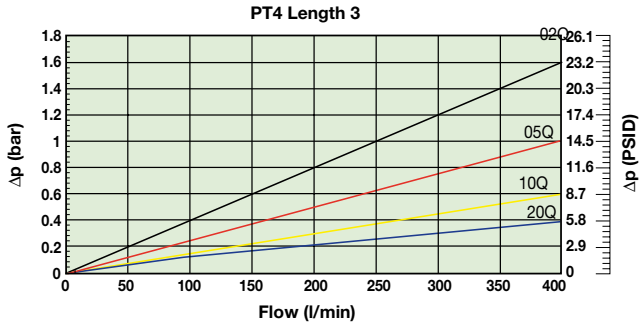

Indicator Information

Indicator PS NO/NC pressure switch

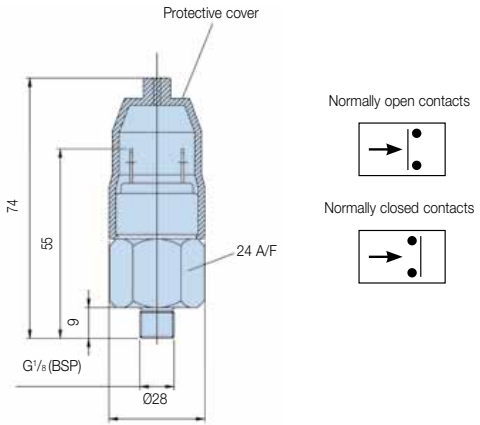

Pressure Switches	
Elec. rating	42V / 2A
Thread connection	G1/8
Elec. connection	AMP terminal 6.3 x 0.8
Protection	IP65 (terminal IP00)
Switch type	NO or NC
Indicator setting	1.2 bar
Code	FMUS2EBMG02L (NO switch)
	FMUS3EBMG02L (NC switch)

Visual Indicator	Code
1.2 bar	FMUG2EBPG02L

Tel: +45 63 12 83 00 | Email: ps@hymatik.com | www.hymatik.com | Hvidkaervej 27a, DK-5250 Odense SV, Denmark

Ordering Information

Product configurator

Configurator example PT filter

Box 1	Box 2	Box 3	Box 4	Box 5	Box 6	Box 7	Box 8
PT2	**1**	**10Q**	**B**	**P**	**G**	**G12**	**I**

Box 1

Housing	Code
PT2	**PT2**
PT4	**PT4**

Highlights Key (Denotes part number availability)

123	Item is standard
123	Item is semi standard
123	Item is non standard

Box 2

Element Length	Code
Length 1	**1**
Length 2	**2**
Length 3 (PT4 only)	**3**

Box 3

Filter media (Microglass III)	Code
2 micron	02Q
5 micron	05Q
10 micron	**10Q**
20 micron	20Q

Box 4

Seal Material	Code
Nitrile	**B**
Fluoroe/astomer	V

Box 5

Indicator	Code
Plugged port	**P**
Pressure Switch 42V, 1.2 bar setting, NO	S2
Pressure Switch 42V, 1.2 bar setting, NC	S3
Pressure gauge, setting 1.2 bar, G3/8	G2

Box 6

Bypass Valve	Code
1.7 bar	**G**

Box 7

Ports	Code
G3/4 (PT2 only)	G12
G1	**G16**
G1 1/4 (PT4 only)	**G20**

Box 8

Options	Code
No diffuser required	1
Airtight diffuser	**4**

Spare Filter Elements

Media	PT2-1	PT2-2	PT4-1	PT4-2	PT4-3
02Q	936753Q	936757Q	936745Q	936749Q	936879Q
05Q	936752Q	936756Q	936744Q	936748Q	936878Q
10Q	936751Q	936755Q	936743Q	936747Q	936877Q
20Q	936750Q	936754Q	936742Q	936746Q	936876Q

Filter Media Efficiency

Degree of filtration						Media code
Average filtration beta ratio ß (ISO 16889) / particle size µm [c]						
ßx(c)=2	ßx(c)=10	ßx(c)=75	ßx(c)=100	ßx(c)=200	ßx(c)=1000	
% efficiency, based on the above beta ratio (ßx)						
50.0%	90.0%	98.7%	99.0%	99.5%	99.9%	
N/A	N/A	N/A	N/A	N/A	4.5	**02Q/02QL**
N/A	N/A	4.5	5	6	7	**05Q/05QL**
N/A	6	8.5	9	10	12	**10Q/10QL**
6	11	17	18	20	22	**20Q/20QL**

Note 1: Part numbers featured with bold highlighted codes will ensure a 'standard' product selection.
Note 2: Alternate displayed part number selection will require you to contact Parker Filtration for availability.

Tel: +45 63 12 83 00 | Email: ps@hymatik.com | www.hymatik.com | Hvidkaervej 27a, DK-5250 Odense SV, Denmark

Maxiflow Series

Spin-on Filters

Max. 360 l/min - 10 bar



Designed for both suction and return application

Spin-on filters

The Maxiflow Series full flow filters for suction or return are designed to provide quality protection for hydraulic or lubrication systems.

Rated at a maximum pressure of 10 bar at 360 l/min, Maxiflow filters cover a wide range of mobile and industrial applications.



Contact Information:

Parker Hannifin
Hydraulic Filter Division Europe

European Product Information Centre
Freephone: 00800 27 27 5374
(from AT, BE, CH, CZ, DE, EE, ES, FI, FR, IE, IT, PT, SE, SK, UK)
filtrationinfo@parker.com

www.parker.com/hfde

Product Features:

- Maxiflow full flow filters for suction or return applications.
- Available with optional indicators.
- Maximum pressure 10 bar. Maximum flow 360 l/min.
- High quality filter medium.

Maxiflow Series

Spin-on Filters
Max. 360 l/min - 10 bar

Features & Benefits

Features	Advantages	Benefits
High quality paint for canisters	Long term protection against corrosion	Better protection against environmental influences
Spin-on filters available for suction and return line filtration	Flexible product offering	Standardisation of components
High quality filter medium	Filter medium suitable for fatigue load due to high frequent flow fluctuation	Extended element life time

Typical Applications

- Telescopic handlers
- Refuse vehicles
- Road sweepers
- Compactors
- Industrial power units
- Grass cutters
- Press brakes



MXA 1 Series



MXA 2 Series



MXA 3 Series

The Parker Filtration Maxiflow Full Flow Filters for Suction or Return.

Maxiflow filters are ideally suited to full flow and bypass circuit installations where the need for high quality filter media is recommended for effective protection of system components, improving system productivity and profitability.

Optional indicators provide direct information as to when the spin-on canisters require replacement.

Specification

	MXA Series
Maximum working pressure:	10 bar
Filter head material:	Aluminium alloy
Filter bowl material:	Steel
Seal material:	Nitrile
Operating temperature range:	-30°C to +100°C
Bypass:	Return line 1.7 bar Suction line 0.2 bar No bypass option
Fluids:	Mineral oils
Element media:	Microglass III media Cellulose media

Installation Details

MXA 1 Series

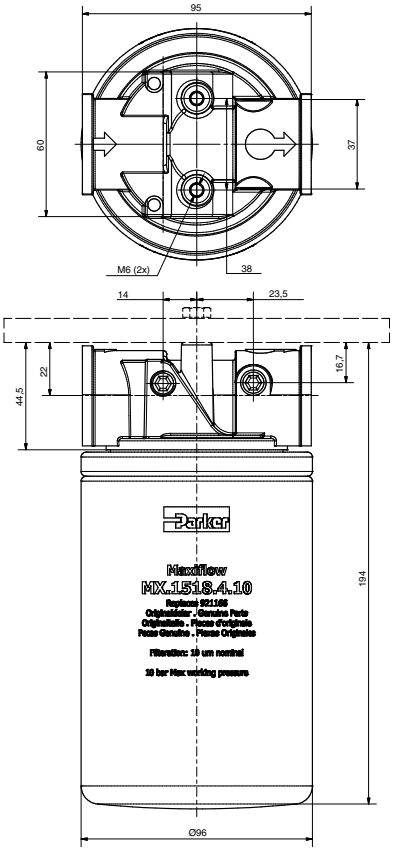

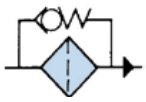

MXA 2 Series

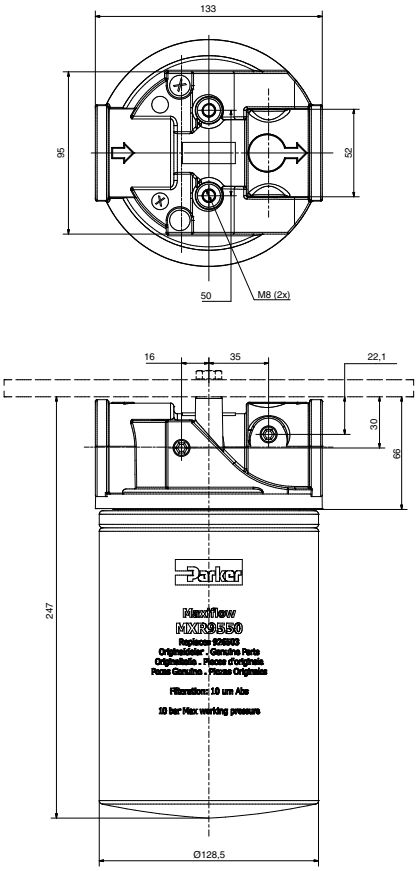

MXA 3 Series

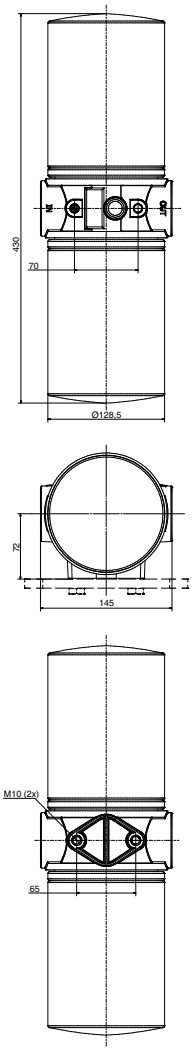

Parker Hannifin
Hydraulic Filter Division Europe
FDHB500UK/Maxiflow

Tel: +45 63 12 83 00 | Email: ps@hymatik.com | www.hymatik.com | Hvidkaervej 27a, DK-5250 Odense SV, Denmark

Maxiflow Series

Pressure Drop Curves

The recommended level of the initial pressure drop for low pressure filters is max 0.5 bar.
If the medium used has a viscosity different from 30cSt, pressure drop over the filter can be estimated as follows:
Δp = (Δp30 x viscosity of medium used) / 30cSt.

Maxiflow MXA 1 Series

Filter Housing

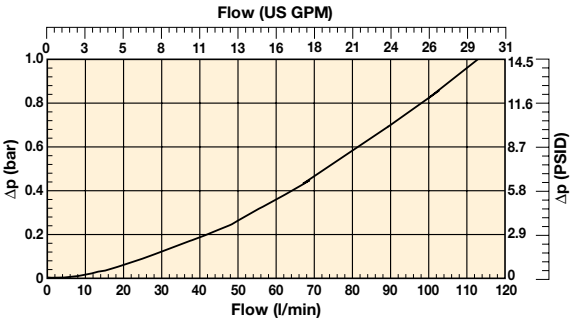

Filter Element

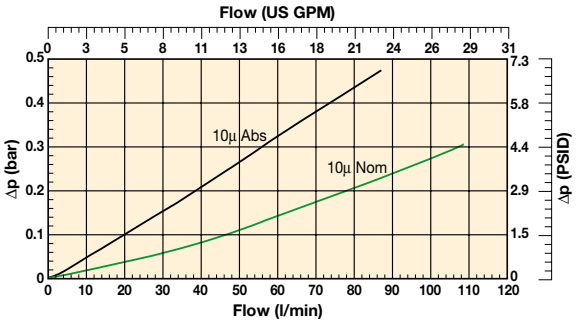

Maxiflow MXA 2 Series

Filter Housing

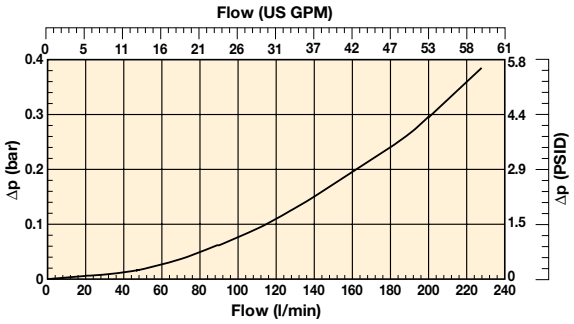

Filter Element

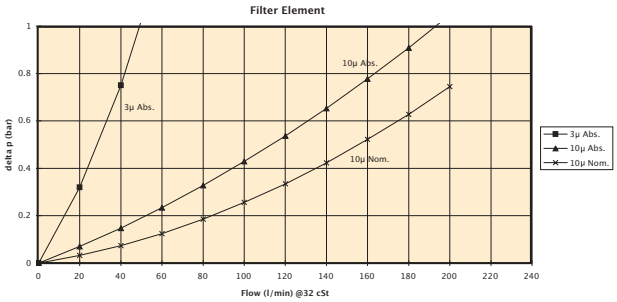

Maxiflow MXA 3 Series

Filter Housing

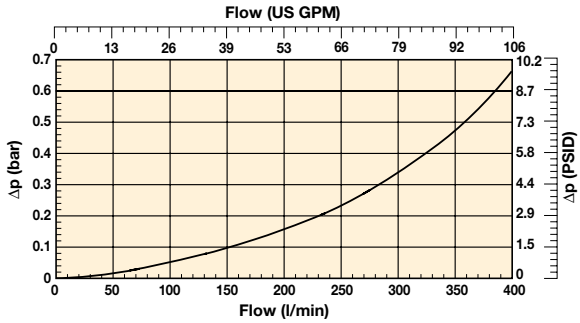

Filter Element

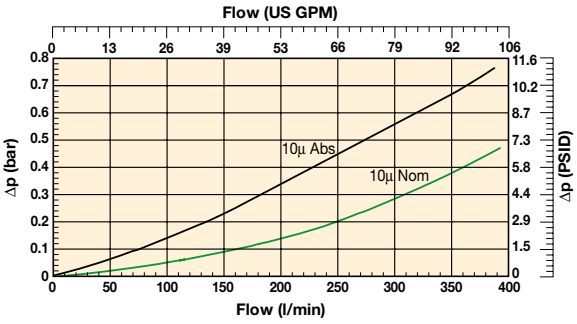

Note: All above data is calculated at 30cSt Rel density 0.856.

Tel: +45 63 12 83 00 | Email: ps@hymatik.com | www.hymatik.com | Hvidkaervej 27a, DK-5250 Odense SV, Denmark

Indicator Specifications

Option
Visual Pressure Indicator
Code G2

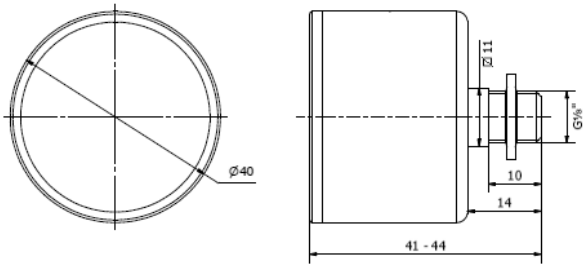

Visual indicator	
Thread connection	G⅛
Code	FMUG2EBPG02L

Option
Indicator PS NO/NC Pressure Switch
Code S2/S3

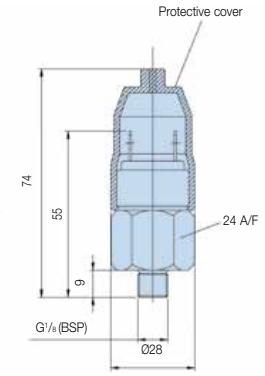

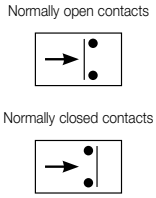

Specifications	
Elec.rating	42V / 2A
Thread connection	G⅛
Elec.connection	AMP terminal 6.3x0.8
Protection	IP65 (terminal IP00)
Switch type	NO or NC
Code	FMUS2EBMG02L (NO switch)
	FMUS3EBMG02L (NC switch)

Ordering Information

Box 1

Housing type	Code
MXA1	**MXA1**
MXA2	**MXA2**
MXA3 Double element version	**MXA3**

Box 2

Element Length	Dimensions	Thread Spin-on can	Code
Short (MXA 1 only)	D=97.0 L=58.5	G3/4"	On request
Size 1 (MXA 1 only)	D=97.0 L=145	G3/4"	**2**
Size 2 (Not for MXA1)	D=128.0 L=180	G1¼"	**3**
Ext'd Size 2 (Not for MXA1)	D=128.0 L=226	G1¼"	On request

Box 3

Filter Media	Code
10 micron Microglass III Abs.	**10Q**
10 micron (nom) Cellulose	**10C**
3 micron Abs. (MXA2 + 3 only)	**03Q**

Box 4

Seal Material	Code
Nitrile	**B**

Box 5

Indicator	Code
Plugged port	**P**
Pressure Switch 42V, 1.2 bar setting, NO	S2
Pressure Switch 42V, 1.2 bar setting, NC	S3
Pressure Gauge, setting 1.2 bar	G2

Box 6

Bypass Valve	Code
1.7 bar	**G**
Blocked Bypass	X
0.2 bar Suction	On request

Box 7

Ports	Code
G3/4" (MXA1 only)	**G12**
G1¼ (MXA2 only)	**G20**
G1½ (MXA3 only)	**G24**

Box 8

Housing type	Code
Standard	**1**

Tel: +45 63 12 83 00 | Email: ps@hymatik.com | www.hymatik.com | Hvidkaervej 27a, DK-5250 Odense SV, Denmark



THERE'S ONLY ONE SOLUTION

When it comes to replacement hydraulic filter elements there is only one solution: The ParFit interchange element range.

With over 50,000 standard, off-the-shelf variations, there is a ParFit element to fit most sizes and makes of OEM filters on mobile, construction, agricultural and industrial plant.

Every ParFit filter element is manufactured in Europe to the highest standards and is backed by our unrivalled technical support and money-back guarantees.

That means that you can reduce stockholdings, cut costs and be sure of the ultimate performance, with long, trouble-free operating life.

ParFit filters are available from ParkerStores and authorised distributors throughout the UK. To find your nearest ParkerStore Email filtrationinfo@parker.com or find the ParFit you need using our element selector at www.parker.com/parfit.

Parker

Parker Hannifin
Hydraulic Filter Division Europe
FDHB500UK.

ATZ Series

Suction Filters
Max. 300 l/min



When the ultimate protection is critical

Compact and robust cast aluminium filter design

The ATZ Series locate below tank oil level offering maximum protection for the hydraulic system pump. Pre-filtration takes place by means of a magnetic column. Maximum flow 300 l/min. Suitable for heavy duty industrial applications and recommended for reservoirs with high contamination ingress.



Contact Information:

Parker Hannifin
Hydraulic Filter Division Europe

European Product Information Centre
Freephone: 00800 27 27 5374
(from AT, BE, CH, CZ, DE, EE, ES, FI, FR, IE, IT, PT, SE, SK, UK)
filtrationinfo@parker.com

www.parker.com/hfde

Product Features:

- ATZ submersible suction filters locate below tank oil level.
- Pre-filtration takes place by means of a magnetic column.
- Maximum flow 300 l/min.
- In-to-Out filter stops contaminated oil leaking back into the system.

ATZ Series
Suction Filters

Features & Benefits

Features	Advantages	Benefits
Cast aluminium construction	Compact and robust durable construction	Suitable for heavy duty industrial applications
Integrated check valve	Filter element can be changed when the filter housing is submerged under the oil in the tank	Improved protection of sophisticated pumps
Magnetic pre-filtration	Removes ferrous particles, even during bypass conditions	Improved fluid cleanliness levels
		Extended element life time
In-to-Out filtration	All captured contamination retains inside the element	No recontamination of system during change of elements
Wide range of vacuum measurement devices	Continuous filter condition monitoring	Contributes to just-in-time service
		Improved protection of pump when pressure measurement device connected with pump drive management

Typical Applications

- Wool untangling machine
- Hydraulic winch
- Power packs with sophisticated pumps
- Drilling blocks



The Parker Filtration ATZ Series Submersible Suction Filters.

ATZ Filters are located below the tank's oil level, offering maximum protection for the hydraulic system pump. When removing the element, the check valve closes automatically, eliminating any chance of oil leakage. Pre-filtration takes place by means of a magnet column. Thanks to the 'In-to-Out' filter principle, contaminated oil cannot leak back into the system. ATZ Filters are capable of handling nominal flow rates up to 300 l/min.

Specification

Operating pressure:
Vacuum.

Assembly:
Suction line filter, mounted horizontally against tank side.

Connections:
Threads G1¹/₂ (ISO 228) or flanges 2" SAE-300PSI.

Filter housing:
Aluminium.

Seal material:
Nitrile, neoprene, fluoroelastomer.

Operating temperature range:
Seal material Nitrile: -40˚ to +100˚C.
Seal material Fluoroelastomer: -20˚ to +130˚C.

Bypass valve:
Blocked.

Degree of filtration:
Determined by multipass test according to ISO 16889.

Flow fatigue characteristics:
Filter media is supported so that the optimal fatigue life is achieved.

Filtration media:
Microglass III.
10µ cellulose and 40µ Stainless Steel.

Element burst+ rating:
10 bar (ISO 2941).

Pressure indicator options:
0.15 bar or 0.30 bar (vacuum gauge).
125-250VAC (LI-0, 5A, Lr-2, 0A) (electrical vacuum switch).
12-28Vdc (Li-1, 0A, Lr-3, 0A) (electrical vacuum switch).

Features:
Unique check valve, enabling element change below oil level.

Filter element:
Element with steel end caps.

ATZ-120

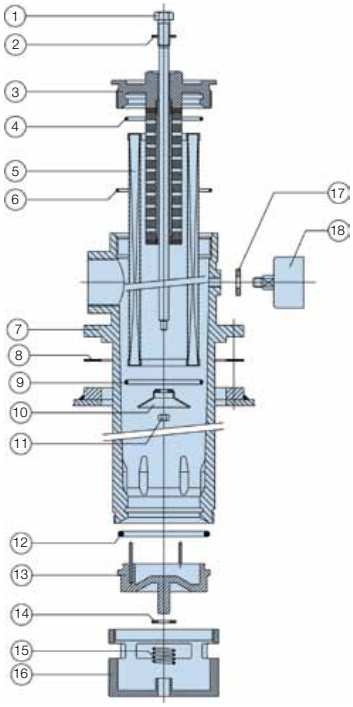

ATZ-300

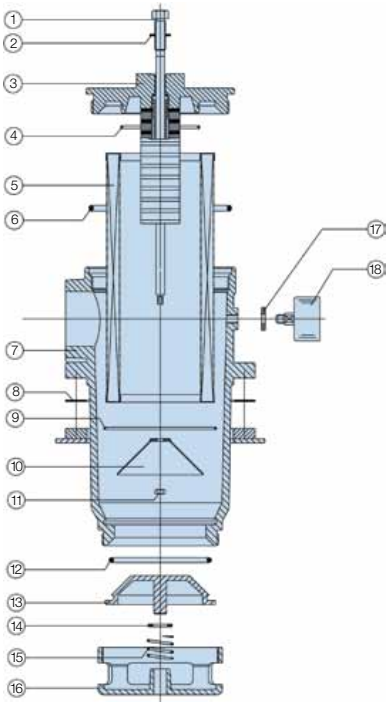

Vacuum Switch

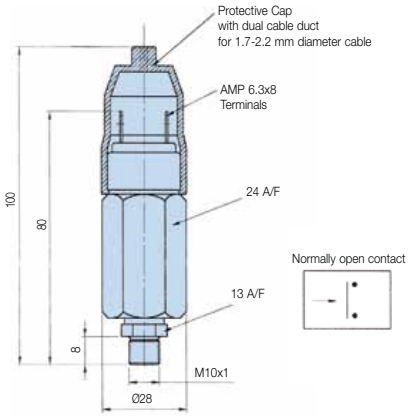

ATZ-120 & ATZ-300

Ref. No.		Description	Ref. No.		Description
1	1	Bolt	10	1	Valve support
2	1	Seal ring	11	1	Nut
3	1	Insert	12	1	O-ring
4	1	O-ring	13	1	Valve
5	1	Element	14	1	Ring
6	1	O-ring	15	1	Spring
7	1	Filter-housing	16	1	Valve-housing
8	1	Gasket	17	1	Bonded seal
9	1	O-ring	18	1	Indicator

ATZ Series
Suction Filters

Specification (cont.)

ATZ-120

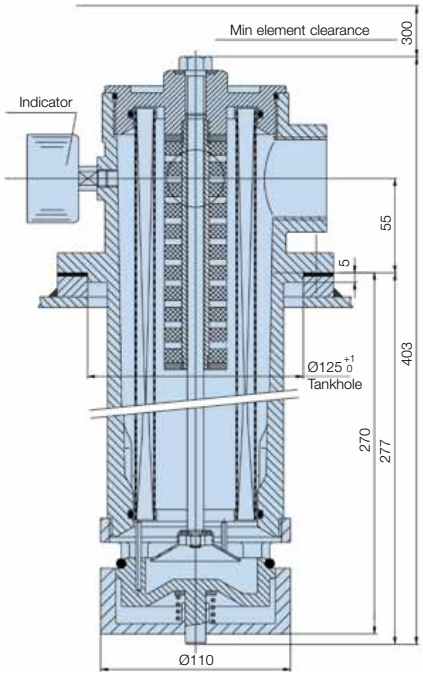

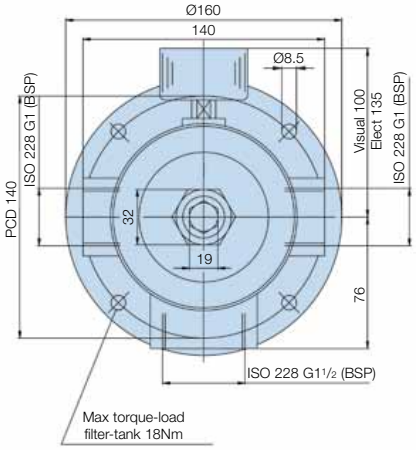

The Parker suction filters, type ATZ, are designed for submerged operation. The filters contain a unique check valve which automatically closes when the filter insert is removed from the housing, thus enabling element change below oil level. Construction is based on the field proven Parker Filter System.

ATZ-300

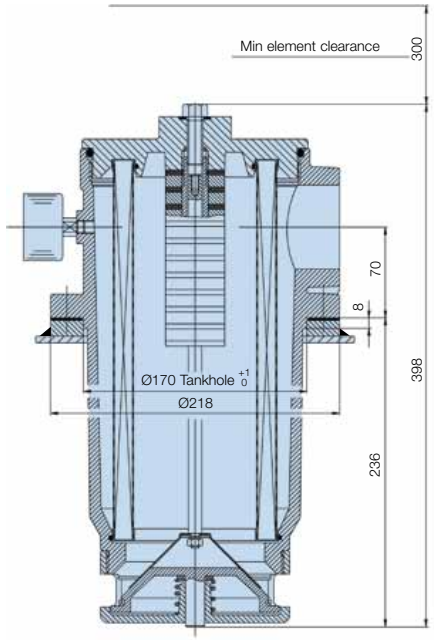

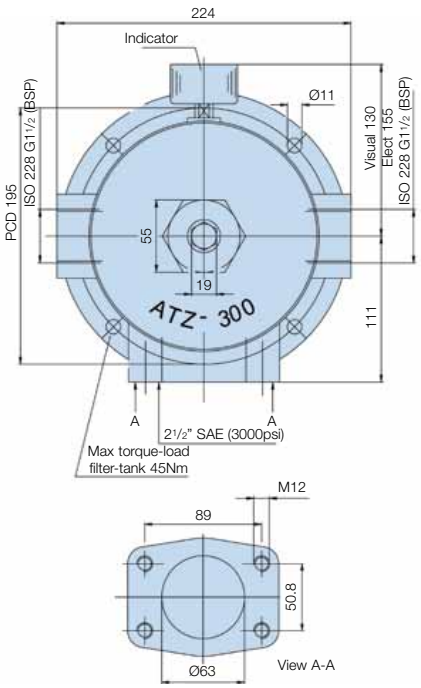

Parker Hannifin
Hydraulic Filter Division Europe
FDHB500UK/ATZ

Pressure Drop Curves

The recommended level of the initial pressure drop for suction filters is 0.03 bar.
If the medium used has a viscosity different from 32cSt, pressure drop over the filter can be estimated as follows:
Δp = (Δp32 x viscosity of medium used) / 32cSt.
Filter housing and element pressure drop based on 32cSt fluid viscosity and 0.87 density.

ATZ 1-120 (G1 1/2) Empty Housing

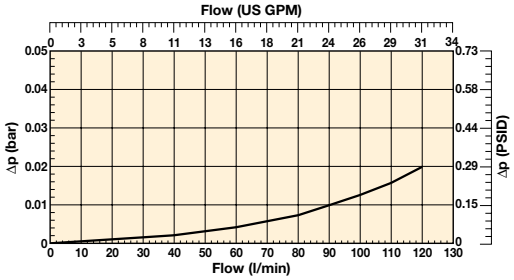

ATZ 300 (2 1/2 SAE FLANGE) Empty Housing

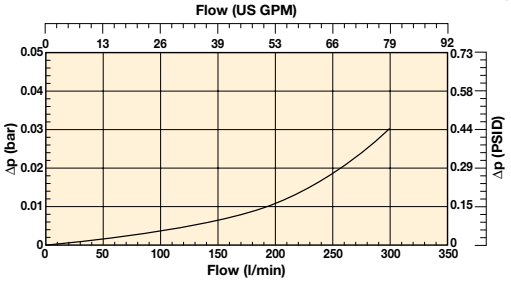

ATZ120 Filter Element Length 1

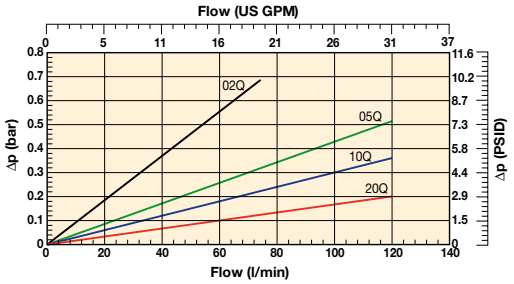

ATZ300 Filter Element Length 2

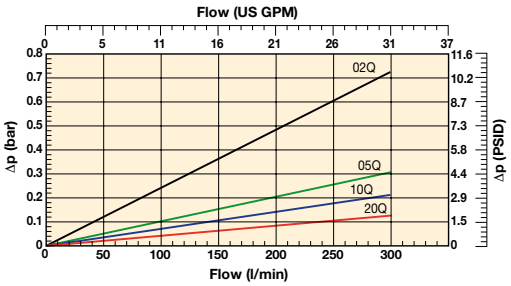

ATZ120 Filter Element Length 1
(cellulose and stainless steel)

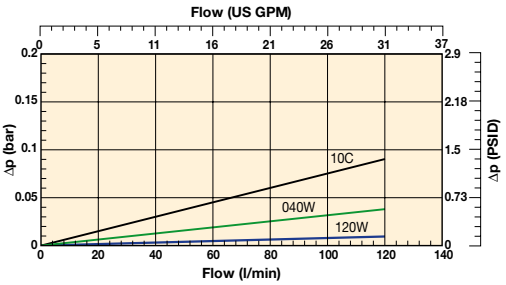

ATZ300 Filter Element Length 2
(cellulose and stainless steel)

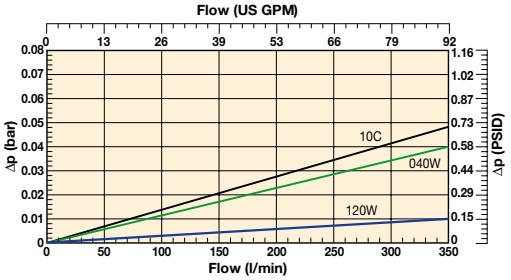

ATZ Series
Suction Filters

Ordering Information

Standard products table

Part number	Supersedes	Flow (l/min)	Model number	Element length	Media rating (µ)	Seals	Indicator	Bypass settings	Ports	Included options	Replacement elements	Supersedes
ATZ110CBPXG241	ATZ120-G1½ FXX1-R-10 B M	120	ATZ120	Length 1	10 NOM	Nitrile	Plugged	Blocked	G1½"	None	**937958**	FXX1-R-10
ATZ110QBPXG241	ATZ120-G1½ FXW1-R-10 B M	120	ATZ120	Length 1	10 ABS	Nitrile	Plugged	Blocked	G1½"	None	**937964Q**	FXW1-R-10
ATZ210CBPXR481	ATZ300-S2½-C FXX3-10 B M	300	ATZ300	Length 2	10 NOM	Nitrile	Plugged	Blocked	2½" SAE-3000 PSI	None	**937959**	FXX3-10
ATZ210QBPXR481	ATZ300-S2½-C FXW3-10 B M	300	ATZ300	Length 2	10 ABS	Nitrile	Plugged	Blocked	2½" SAE-3000 PSI	None	**937965Q**	FXW3-10

Note: Filter assemblies ordered from the product configurator below are on extended lead times. Where possible, please make your selection from the table above.

Product configurator

Configurator example ATZ filter

Box 1	Box 2	Box 3	Box 4	Box 5	Box 6	Box 7	Box 8
ATZ	**2**	**10C**	**B**	**U2**	**X**	**R48**	**1**

Box 1

Code
ATZ

Box 2

Filter type	
Housing	**Code**
ATZ 1-120	**1**
ATZ 2-300	**2**

Box 3

Degree of filtration						
Element media		**Glass fibre**				
		Microglass III (for disposable elements)				
	Cellulose					**Wire mesh**
	Nom. rating					Abs. rating
Disposable element	**10C**	02Q	05Q	**10Q**	20Q	040W

Box 4

Seal type	
Seal material	**Code**
Nitrile	**B**
Fluoroelastomer	V
Neoprene	N

Box 5

Indicator	
	Code
Vacuum gauge, setting -0.15 bar, M10x1	U1
Vacuum gauge, setting -0.3 bar, M10x1	**U2**
Vacuum switch 42V, -0.15 bar setting, NO, M10 x 1	V1
Vacuum switch 42V, -0.30 bar setting, NO, M10 x 1	V2
Vacuum switch 250 VAC, -0.15 bar setting, NO/NC, M10 x 1	V3
Vacuum switch 250 VAC, -0.30 bar setting, NO/NC, M10 x 1	V4
No indicator, indicator ports not machined	N
No indicator, indicator port plugged	**P**
Other settings for indicators / gauges on request	on request

Box 6

Bypass valve	
Bypass valve	**Code**
Blocked bypass	**X**

Box 7

Filter connection	
Ports	**Code**
G1½" + 2 x G1" (For ATZ 1-120 only)	**G24**
2½" SAE-3000 PSI +2 x G1½" (For ATZ 2-300 only)	**R48**

Box 8

Options	
Options for ATZ 1-120	**Code**
1 x G1½" + 1 x G1" plugged	**1**
Not plugged	Q
1 x G1" right plugged	R
2 x G1" left & right plugged	P
Special	on request
Options for ATZ 2-300	
2½ SAE with blind counterflange	1
No counterflange	Q
Special	on request

Highlights Key (Denotes part number availability)

123	Item is standard
123	Item is standard green option
123	Item is semi standard
123	Item is non standard

Degree of filtration						Media code
Average filtration beta ratio ß (ISO 16889) / particle size µm [c]						
ßx(c)=2	**ßx(c)=10**	**ßx(c)=75**	**ßx(c)=100**	**ßx(c)=200**	**ßx(c)=1000**	
% efficiency, based on the above beta ratio (ßx)						
50.0%	**90.0%**	**98.7%**	**99.0%**	**99.5%**	**99.9%**	
N/A	N/A	N/A	N/A	N/A	4.5	**02Q**
N/A	N/A	4.5	5	6	7	**05Q**
N/A	6	8.5	9	10	12	**10Q**
6	11	17	18	20	22	**20Q**

Visual indicator	
Setting	-0.3 bar
Thread connection	M10x1
Code	FMUU2VBMM10L

Electrical switch	
Setting	-0.3 bar
Thread connection	M10x1
Switch type	NO
Elec.connection	AMP terminal 6.3x0.8
Protection	IP54 (terminal IP00)
Performance	125-250 VAC (Li 0,5A, Lr 2,0A max)
	12-28 Vdc (Li 1,0A, Lr3,0A max)
Code	FMUV2VBMM10L

Spare element table						
ATZ 1-120	FXX1-R-10	FXW1-R-2	FXW1-R-5	FXW1-R-10	FXW1-R-20	SF1-R-40
Part number spare element	937958	937960Q	937962Q	937964Q	937966Q	937967
ATZ 2-300	FXX3-10	FXW3-2	FXW3-5	FXW3-10	FXW3-20	SF3-40
Part number spare element	937959	937961Q	937963Q	937965Q	944296Q	937968

ATZ Series Seal Kits	
Part Number	**Description**
2049010001	NITRILE SEAL KIT ATZ1
2049010060	FLUOROELASTOMER SEAL KIT ATZ1
2049010002	NITRILE SEAL KIT ATZ2

Note 1: Part numbers featured with bold highlighted codes will ensure a 'standard' product selection.
Note 2: Alternate displayed part number selection will require you to contact Parker Filtration for availability.

Parker Hannifin
Hydraulic Filter Division Europe
FDHB500UK/ATZ

Tel: +45 63 12 83 00 | Email: ps@hymatik.com | www.hymatik.com | Hvidkaervej 27a, DK-5250 Odense SV, Denmark

Oil Conditioning Unit (OCU)

Off-line filtration for the removal of water or particulate from hydraulic and lube system fluids.



A cost-effective solution that helps ensure system reliability.

The Parker Oil Conditioning Units (OCU) are a family of off-line filtration packages designed to effectively remove water or particulate contamination from hydraulic and lube system fluids. The high performance, high capacity design enables the efficient removal of the very fine contaminants that cause premature wear in expensive hydraulic components. In addition, the precursors to varnish are also reduced or eliminated completely.

The compact, user-friendly OCUs are a cost effective method of reducing system contamination while helping to ensure the reliability of your hydraulic or lube system.



Contact Information:

Parker Hannifin
Hydraulic Filter Division Europe

European Product Information Centre
Freephone: 00800 27 27 5374
(from AT, BE, CH, CZ, DE, EE, ES, FI, FR, IE, IT, PT, SE, SK, UK)
filtrationinfo@parker.com

www.parker.com/hfde

Product Applications:

- **Aviation**
  - ground support equipment
  - simulators
- **Power Generation**
  - steam and gas turbine hydraulic and lubrication
- **Automotive**
  - presses
  - stamping equipment
- **Steel Mills**
  - rolling mills
  - continuous casters
  - sheet mills
- **Injection Moulding**
  - hydraulic circuits
- **Railway**
  - car assembly
  - wheel presses
- **Pulp & Paper**
  - machine lubrication
- **Construction**
  - timber harvesting
  - aerial lifts
  - excavators
- **Wind Power**
  - turbine generators
  - gearboxes
- **Oil & Gas**
  - hydraulic equipment

Technology
Oil Conditioning Unit

The filter design allows the oil to flow under pressure through 114mm of engineered media with three distinct stages of filtration and water absorption.

The largest particles are retained in the top of the element (1), making for an excellent diagnostic tool. Smaller particles are trapped in the mid stage (2), and the smallest particles are trapped in the lower and most compressed part of the element (3).

The cellulose media allows water absorption of up to 200 millilitres within the filter, reducing the water concentration in oil to less than 100 parts per million typically.

Equally noteworthy is the efficiency of the media in removing resins, metals and oxidation products, all of which are extremely damaging to close-tolerance components.

Manufactured from a specifically engineered cellulose material wound onto a central core, the OCU combines filtration principles to achieve effective filtration – low flow, low pressure and depth loading axial filtration – flow direction from the top to the bottom.



A card sleeve compresses the lower part of the element to increase the density and a non-woven cloth protects the base and stops particle migration.

Features and Benefits

- Solid Partical Filtration
- Water Absorption
- Sludge, Resin, and Oxidation Absorption

The Parker OCU Benefits

- Removing up to 99% of all Solid Contaminates typically
- Reducing the Water Concentration to Less than 100 ppm typically
- Eliminating Resins and Oxidation Products
- Longer Life for Hydraulic Components
- Significant Reduction of Oil Consumption and Oil Disposal Cost
- Low Cost Full Flow Filter Cartridges
- Reduce Equipment Downtime
- Reduce Operating Cost
- Increase Profit

Features and Benefits Continued



Tool-less access and easy service via the T-handle.

The combination of chemically treated cellulose and synthetic layers of media presents a massive surface area to remove solid contamination and emulsified water. The result is both exceptional dirt holding capacity and removal of water concentration to less than 100 ppm.

The engineered base design at the bottom of the housing supports the element under high pressure and provides a channelled migration path for clean fluid to flow back into the primary stream.

The Oil Conditioning Unit is designed as a top load filter, but can be mounted at any angle using the heavy-duty mounting bracket.



The intricately channelled base provides a large footprint to fully support the element under pressure, ensuring uniform loading of the element. Ultra-clean oil flows through the channels into the clean oil stream.

Element Performance

Model OC1				
Media Grade	**Part Number**	**Capacity @ 1.7 bar (25 PSID)**	**Capacity @ 3.5 bar (50 PSID)**	**Efficiency**
2 Micron	942650	16.2 grams	23.3 grams	B2>400
10 Micron	942652	28 grams	44.3 grams	B10>400

Model OC2				
Media Grade	**Part Number**	**Capacity @ 1.7 bar (25 PSID)**	**Capacity @ 3.5 bar (50 PSID)**	**Efficiency**
2 Micron	942654	22 grams	45.8 grams	B2>400
10 Micron	942656	36.5 grams	61.6 grams	B10>400
Water absorption for the OC2 element (part number 942682) is typically 900 cc.				

Results typical from Multipass tests run per modified test standard ISO 16889 to 3.5 bar (50 PSID) terminal - 100 mg/L BUGL ISO Medium Test Dust was used as per the standard - User results will vary based on system particle distribution.

Dirt Holding Capacity results will typically improve with soft or sub-micron size particles due to reduced surface ‘caking’.

Tel: +45 63 12 83 00 | Email: ps@hymatik.com | www.hymatik.com | Hvidkaervej 27a, DK-5250 Odense SV, Denmark

OC1 without Pump/Motor

Specifications

Specifications	OC1
Maximum Pressure	12.4 bar (180 PSI)
Maximum system pressure	245 bar (3552 PSI)
Port Size (inlet/outlet)	SAE 6/SAE 6
Dimensions	W162 x D166 x H317 mm (W6.38 x D6.54 x H12.48 in.)
Weight	4.5 kg (10 lbs)
Flow Rate	1.5 L/min. (0.4 GPM)

The Parker OCU filter is supplied including:

- Flow / pressure control valve
- Bypass valve

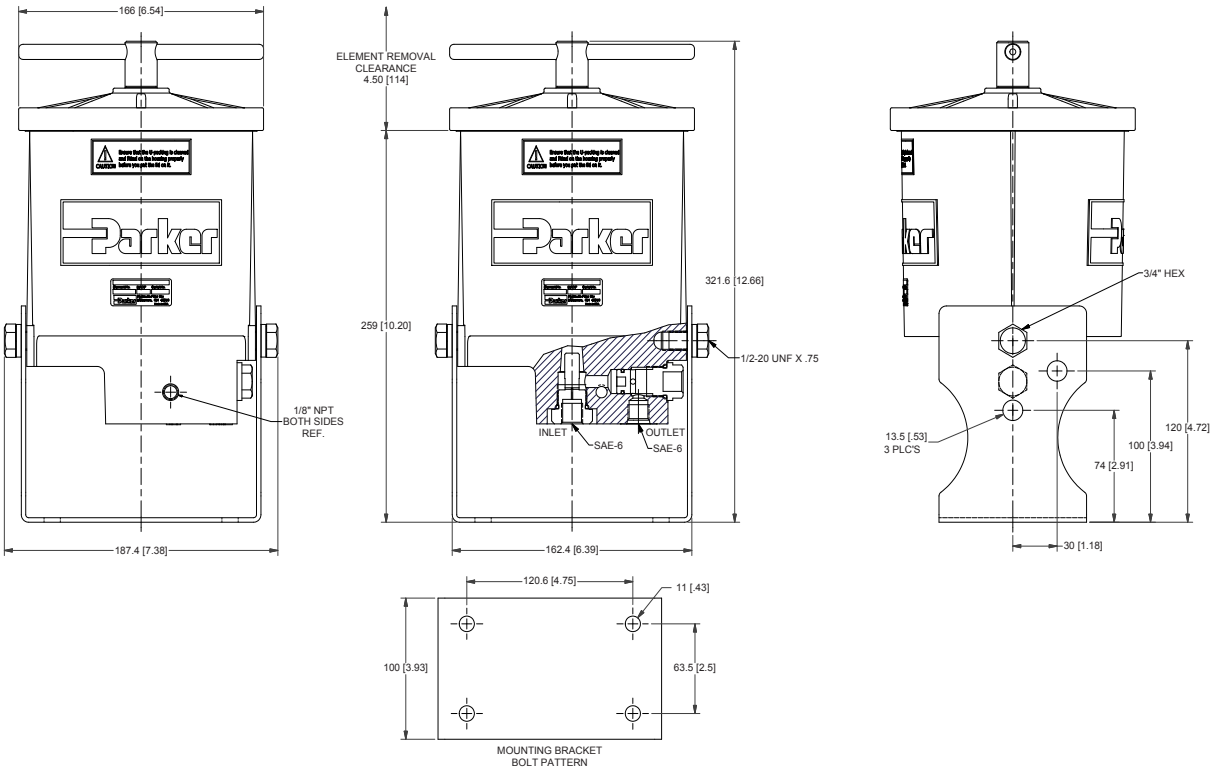

* Dimensions in mm (inch)

Parker Hannifin
Hydraulic Filter Division Europe
FDHB500UK/OCU

OC2 without Pump/Motor

Specifications

Specifications	OC2
Maximum Pressure	12.4 bar (180 PSI)
Maximum system pressure	245 bar (3552 PSI)
Port Size (inlet/outlet)	SAE 6/SAE 8
Dimensions	W204 x D206 x H321 mm (W8.03 x D8.11 x H12.64 in)
Weight	6.8 kg. (15 lbs)
Flow Rate	2 L/min. (0.5 GPM)

The Parker OCU filter is supplied including:

- Flow / pressure control valve
- Bypass valve

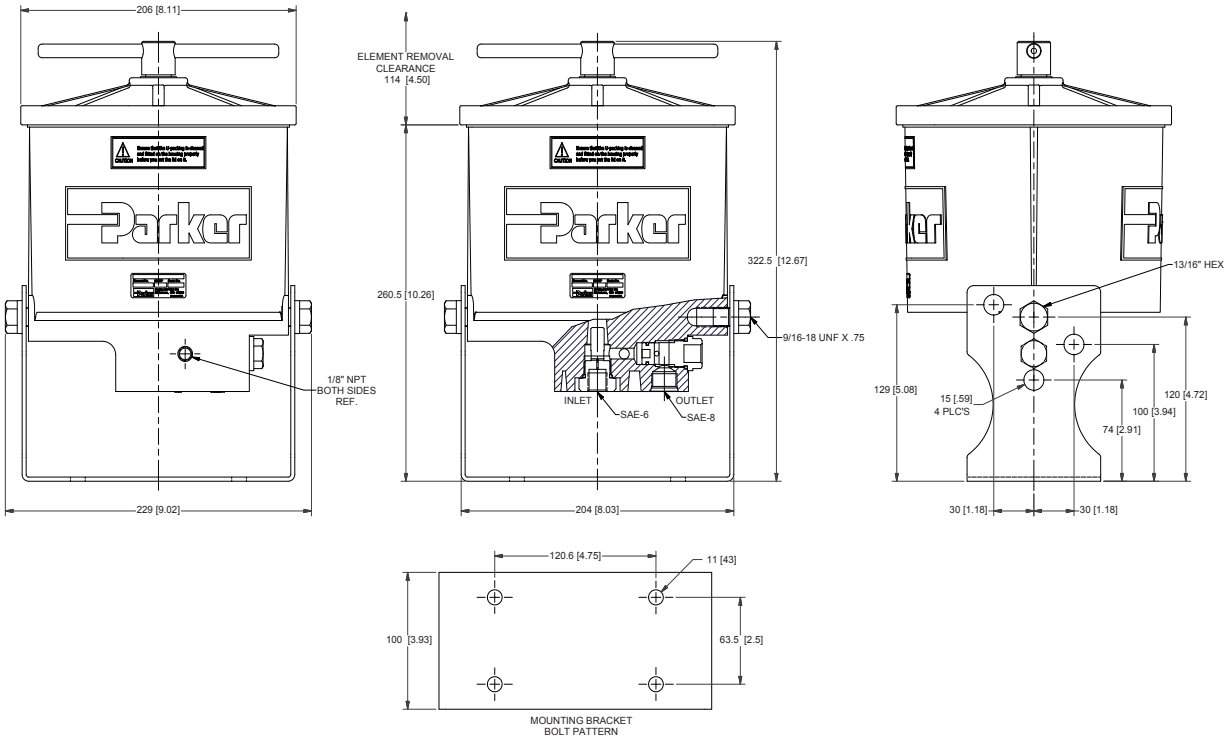

* Dimensions in mm (inch)

OC2 with Pump/Motor

Specifications

Specifications	OC2
Maximum Pressure	12.4 bar (180 PSI)
Port Size (inlet/outlet)	SAE 6/SAE 6
Dimensions	W204 x D206 x H321 mm. (W8.03 x D8.11 x H12.64 in)
Weight	10 kg. (22.1 lbs)
Flow Rate	2 L/min. (0.5 GPM)
Voltage	120VAC or 220VAC

The Parker OCU filter is supplied including:

- Flow / pressure control valve
- Bypass valve

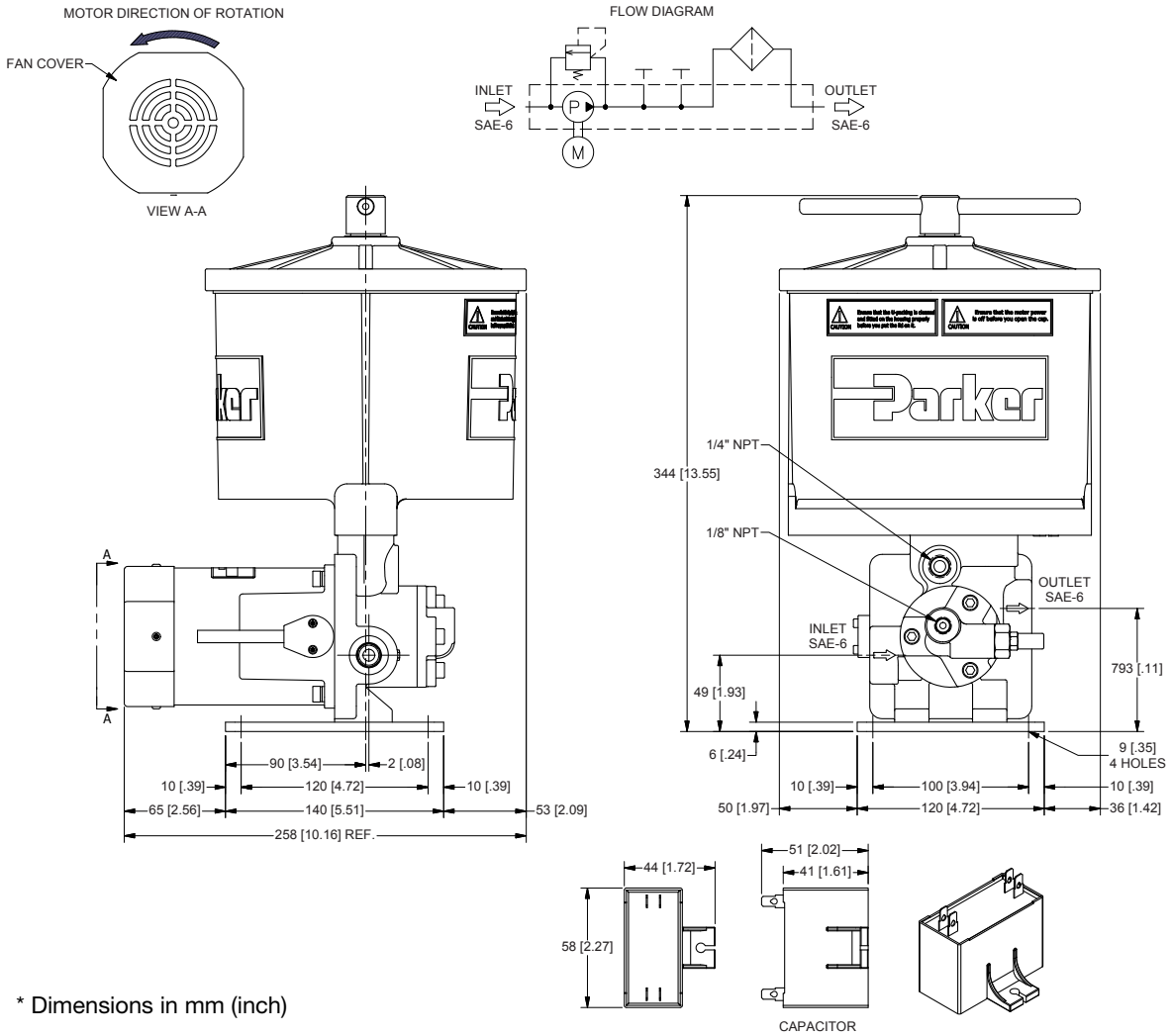

* Dimensions in mm (inch)

Parker Hannifin
Hydraulic Filter Division Europe
FDHB500UK/OCU

Oil Conditioning Unit

Parts List

Replacement Parts List	
942673	Seal Service Kit (for OC1)
942683	Seal Service Kit (for OC2)





Replacement Elements	
OC1	
942650	2 micron (green)
942652	10 micron (orange)
OC2	
942654	2 micron filter (green)
942656	10 micron filter (orange)
942682	Water Removal

Oil Conditioning Unit

Ordering Information

Select the desired symbol (in the correct position) to construct a model code.
Example:

BOX 1	BOX 2	BOX 3	BOX 4	BOX 5	BOX 6	BOX 7	BOX 8
OC2	120	10	V	P	L	S06	1

BOX 1: Filter Series[1]	
Symbol	**Description**
OC1	1.5 L/min. (0.4 GPM)
OC2	2.0 L/min. (0.5 GPM)[1]

BOX 2: Filter Model[1,2]	
Symbol	**Description**
120	120VAC/1Ph/60Hz Pump/Motor[2]
220	220VAC/1Ph/50/60Hz Pump/Motor[2]
X	No Pump/Motor[1]

BOX 3: Media Code[3]	
Symbol	**Description**
2	2 micron
10	10 micron
WR	Water Removal[3]

BOX 4: Seals	
Symbol	**Description**
V	Fluorocarbon (FKM)

BOX 5: Indicator	
Symbol	**Description**
P	Indicator Port Plugged
G	Pressure Gauge
S	Pressure Switch

BOX 6: Bypass	
Symbol	**Pressure Setting**
L	4.5 bar (65 psid) relief

BOX 7: Ports[4]	
Symbol	**Description**
S06	SAE-6 Inlet/Outlet Ports
S08	SAE-6 Inlet Port/SAE-8 Outlet Port[4]

BOX 8: Options	
Symbol	**Description**
1	**None**

Notes:
1. When selection from Box 1 is “OC2”, and selection from Box 2 is “X”, “S08” ***must*** be selected for Box 7.
2. “120” and “220” are available ***only*** when “OC2” is selected in Box 1.
3. “WR” available for OC2 ***only***.
4. “S08” is ***only*** used when “OC2” is selected in Box 1 and “X” is selected in Box 2.

12CS Series

Coreless Spin-on Filter
Max. 75 l/min - 35 bar



Environmentally friendly alternative for spin-on filtration

Lightweight, non-metallic element that can be incinerated

The 12CS Series features a Parker, replaceable coreless Ecoglass III element in a re-usable bowl for easy used element removal and disposal. Maximum pressure 35 bar and the Ecoglass element offers a low environmental impact in landfills.



Contact Information:

Parker Hannifin
Hydraulic Filter Division Europe

European Product Information Centre
Freephone: 00800 27 27 5374
(from AT, BE, CH, CZ, DE, EE, ES, FI, FR, IE, IT, PT, SE, SK, UK)
filtrationinfo@parker.com

www.parker.com/hfde

Product Features:

- 12CS features a Parker quality, replaceable coreless Ecoglass III element.
- Re-usable bowl design for easy element removal.
- Maximum pressure 35 bar.
- An eco filter solution for hydraulic systems.

Tel: +45 63 12 83 00 | Email: ps@hymatik.com | www.hymatik.com | Hvidkaervej 27a, DK-5250 Odense SV, Denmark

Coreless Spin-on Filters

12CS Series



The Smart Alternative to Spin-on Cans!

Features:

Parker engineers have developed an innovative alternative to the age old spin-on style can. This new design provides all of the benefits of high efficiency, long life Ecoglass III filtration, without the environmental impact.

The new environmentally-friendly 12CS hydraulic filters feature a reuseable bowl and a quality filter element constructed primarily of nylon and fiberglass. The element core is permanently attached as part of the filter bowl. When replaced, the element reduces costs, eliminates hot drain requirements, can be easily incinerated, and is better-suited for most landfills.

The 35 bar filter is rated up to 220 l/min, with premium Ecoglass III elements as standard offerings. The element design also prevents filter operation if the proper element is not in place.

Applications:

Mobile Ag
Mobile Construction
Material Handlers
Aerial Lifts
Pilot lines
Charge pump hydrostatic drives
Industrial power units
Machine tools

Feature	Advantage	Benefit
• 35 bar operating pressure	• Withstands pressure surges, allows application versatility.	• Broader applications compared to lower rated spin-on cans.
• Parker quality element	• Provides head-to-bowl seal. • Must be installed for operation. • Ensures original element must be used.	• Provides optimum leak-free performance. • Meets system cleanliness requirements.
• Coreless Ecoglass elements	• Lightweight, non-metallic. • Ease of service and disposal.	• Reduces disposal costs. • Can be incinerated. • Low environmental impact in landfills.
• Spin-on filter assembly w/re-usable bowl	• Improved, cost-effective design.	• Easy to maintain.

Specifications

Pressure Ratings:
Maximum Allowable
Operating Pressure (MAOP):
35 bar (500 psi)
Fatigue: 27.6 bar (400 psi)
1,000,000 cycles: 27.6 bar
Design Safety Factor: 2.5:1

Operating Temperatures:
Buna: -40ºC to 107ºC

Element Collapse Rating:
10.3 bar (150 psid)

Element Condition Indicators:
For predictive maintenance, 3 types of indicator are available: An electrical analogue or switch type indicator or a battery operated visual LED indicator.

Materials:
Head: die cast aluminium
Bypass valve: nylon with steel spring
Filter element: fibreglass and polyester with nylon endcaps
Bowl: steel
Permanent core: steel

Weights (approximate):
12CS-2..... 1.4 kg (3lbs.)

12CS-2

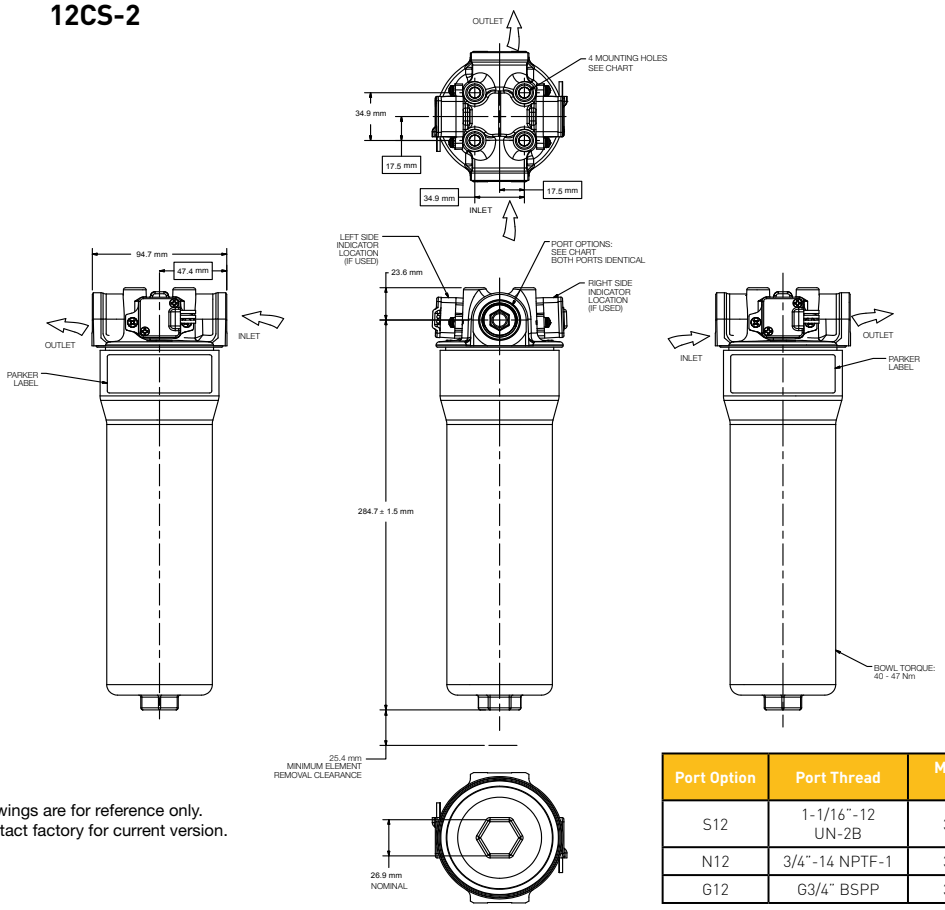

Drawings are for reference only.
Contact factory for current version.

Port Option	Port Thread	Mounting Thread Configuration
S12	1-1/16"-12 UN-2B	3/8" x 16 x 5/8"
N12	3/4"-14 NPTF-1	3/8" x 16 x 5/8"
G12	G3/4" BSPP	3/8" x 16 x 5/8"

Coreless Spin-on Filters

12CS Series

12CS-2 Performance

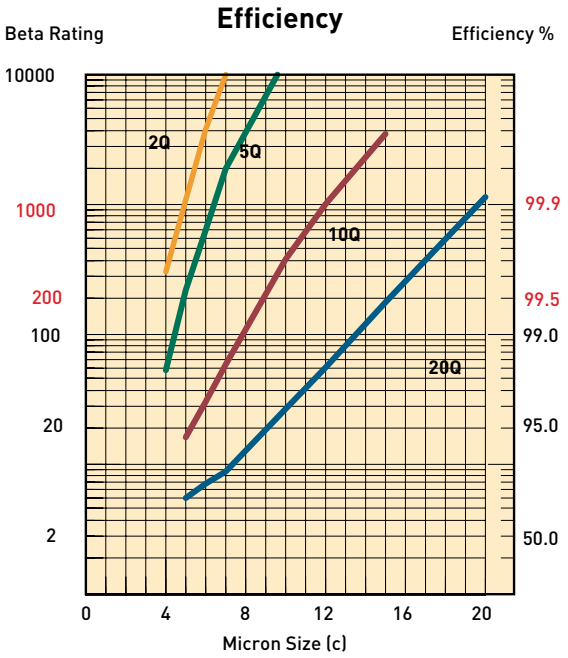

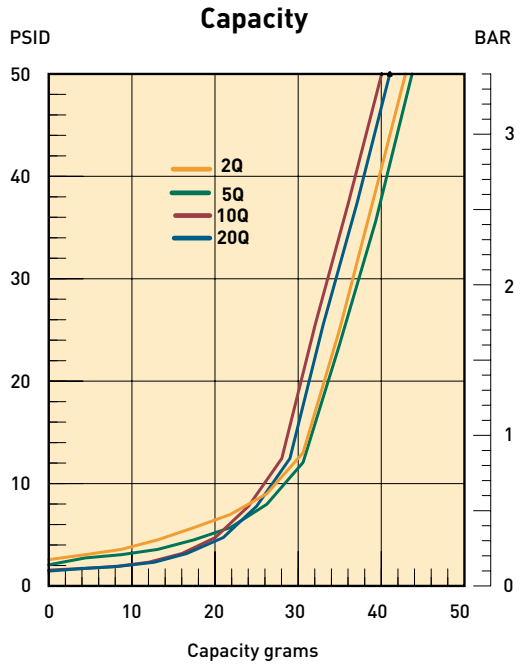

Results typical from Multi-pass tests run per test standard ISO 16889 @ 15 gpm to 50 psid terminal - 10 mg/L BUGL
Refer to Appendix for relationship to test standard ISO 4572.

Flow vs Pressure Loss

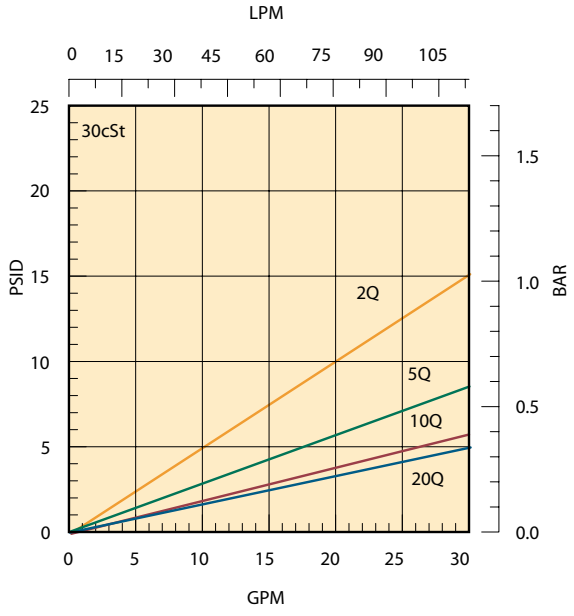

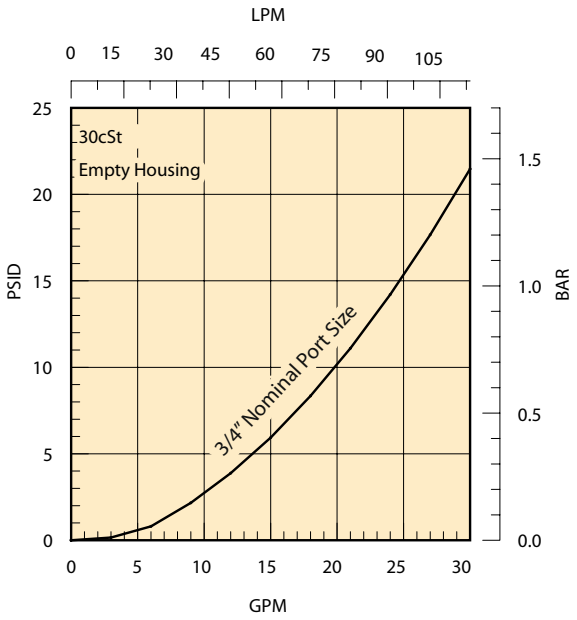

Tel: +45 63 12 83 00 | Email: ps@hymatik.com | www.hymatik.com | Hvidkaervej 27a, DK-5250 Odense SV, Denmark

Coreless Spin-on Filters

12CS Series

Service Instructions 12CS

Filter Service

Filter element should be replaced as indicated by filter indicator gauge,or at specified service intervals recommended by the OEM.

Replacement element procedure

A. Shut down system and release pressure in the filter line.
B. Loosen bowl and remove rotating counter clockwise.
C. Remove dirty element from filter head and discard.
D. Lubricate element seals on clean element and install on filter head element locator.
E. Install reuseable bowl onto element and filter head.



Parts List

Index		12CS
1	**Head**	
	SAE-12	942249
	3/4" NPT	942250
	G3/4" BSPP	942251
2	**Bypass**	
	3.5 bar assembly	928981
3	**Element**	
	02QE	940765Q
	05QE	940764Q
	10QE	940763Q
	20QE	940762Q
4	**Bowl**	
	Double	937599
	Indicators	
5	Analogue Electrical	941802
6	Reed switch (on-off)	941814
7	Visual Red-LED	941945

Element Condition Indicators

5. Analog Elctrical
   - Supply voltage: 4.5 to 5.5 VDC
   - Main output current: 1 mA
   - Output voltage: Ratiometric (see graph)
   - Approvals: CE, IP68
   - Connector: 12" wire leads, 18 Gauge
     Yellow (analog out)
     Black (0V)
     Red (supply +5 V)

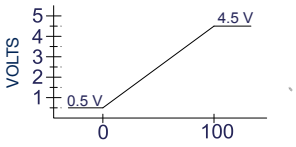

ELEMENT LOAD CONDITION
(% LOADED)



Electrical Switch
or Analog Sensor

6. Electrical Switch (Reed swithc - On/Off
   - Connector: 12" wire leads, 18 Gauge
   - Yellow (NC), black (NO), Red (C)
   - Maximum switching voltage: 30V (DC/AC)
   - Maximum switching current 0.2A
   - Maximum carry current: 0.5A
   - Approvals: CE, IP68

7. Visual Indicator (Red - LED)
   - Push to test
   - Battery operated
   - Visual LED (red = change element)



Visual Indicator

Coreless Spin-on Filters

12CS Series

How To Order

Select the desired symbol (in the correct position) to construct a model code.

Example:

BOX 1	BOX 2	BOX 3	BOX 4	BOX 5	BOX 6	BOX 7	BOX 8
12CS	**2**	**10QE**	**B**	**P**	**G**	**S12**	**1**

BOX 1: Basic Assembly Symbol	Description
12CS	Coreless Spin-On, 75 l/min nominal

BOX 2: Length Symbol	Description
2	Double

BOX 3: Element Media Symbol	Description
02QE	Ecoglass III,2µm
05QE	Ecoglass III,5µm
10QE	Ecoglass III,10µm
20QE	Ecoglass III,20µm

BOX 4: Seals Symbol	Description
B	Nitrile (NBR)
Consult Parker for additional seal options	

BOX 5: Indicator Symbol	Description
N	None

BOX 6: Bypass Symbol	Description
K	3.5 bar (50 PSID)

BOX 7: Ports Symbol	Description
S12	**SAE-12 integral threads***
N12	3/4" NPT integral threads
G12	G¾" BSPP (ISO 220) integral threads

***Porting recommended for best delivery.**

BOX 8: Option Symbol	Description
1	No options

Replacement Elements (Ecoglass)

Media	Filter Model - Nitrile seals 12CS-2
02QE	940765Q
05QE	940764Q
10QE	940763Q
20QE	940762Q

15/40/80CN Series

Medium Pressure Filters
Max. 600 l/min - 70 bar



Premium performance for medium pressure applications

An economical 'multi-purpose' filter solution

The CN Series utilizes a cast aluminium head and spin-on bowl and can be specified with Microglass III or Ecoglass III filter media. Maximum pressure 70 bar. Maximum flow 600 l/min. Excellent performance value from a globally proven, reliable medium pressure filter.



Contact Information:

Parker Hannifin
Hydraulic Filter Division Europe

European Product Information Centre
Freephone: 00800 27 27 5374
(from AT, BE, CH, CZ, DE, EE, ES, FI, FR, IE, IT, PT, SE, SK, UK)
filtrationinfo@parker.com

www.parker.com/hfde

Product Features:

- CN utilizes a cast aluminium head and bowl.
- Excellent fatigue pressure ratings.
- Maximum pressure 70 bar. Maximum flow 600 l/min.
- An economic 'multi-purpose' filter solution.

15/40/80CN Series

Medium Pressure Filters

Features & Benefits

Features	Advantages	Benefits
56 bar fatigue rating (eight times that of a spin-on)	Ability to provide reliable service under tough cyclic operating conditions	Reduced downtime due to premature filter failures
	Can be utilised in applications where high pressure filters may have been only option	Reduced costs, better “fit” for the application
Diametral (side) seal between head and bowl	Proven reliability in cyclic applications	No downtime, no leaks
	Reduced importance of bowl torque	Performs with “real world” service
Dust seal	Prevents contamination from building up on bowl/head threads	Easier service, eliminates thread galling
40CN-2 meets automotive HF3 standard	Automotive industry acceptance	Satisfies specifications without need for further testing and/or approval
15CN meets automotive HF2 standard		
Cast aluminium head	Low profile, lightweight and durable	Less weight, smaller envelop and cleaner appearance
Reinforced Microglass III replacement elements	Multi-layered design produced high capacity and efficiency	Great performance value
		Reliable performance throughout element life
	Wire support reduces pleat bunching, keeps performance consistent	Reduces downtime, maximises element life
Complete performance data disclosure	All pertinent information is provided in an easy-to-compare format	No hidden deficiencies
		Easy selection of proper filtration
Visual, electrical or electronic indicators available	Check element condition at a glance	Optimise element life, prevent bypassing
	Right style for the application	Matches your system electrical connections
Coreless Ecoglass III replacement elements	No metal content in element	Environmentally friendly disposal by incineration
	Reduced overall weight of 50%	Lower element replacement costs
	Easy compaction of used elements	Lower disposal cost
	Conversion kits available: new bowl with permanent core	Retrofit coreless design to housings already installed

Typical Applications

- Compressor lube oil
- Off-line filter loops
- Machine tools (Automotive standard)
- Hydrostatic drive charge pumps
- Mobile equipment
- Pilot lines for servo controls
- Oil patch drilling equipment
- Injection moulding



The Parker Filtration 15/40/80CN Series Medium Pressure Filters.

This partial list of applications for Parker “CN” Series Filters has a common factor, the need for an economical, medium pressure range filter with excellent fatigue pressure ratings. Prior to the availability of the “CN” filter, applications such as those listed were restricted by limitations of a spin-on can, or forced into the higher-cost range of high pressure filters.

The “CN” Series fills this gap and is now available with environmentally friendly Ecoglass III elements.

Tel: +45 63 12 83 00 | Email: ps@hymatik.com | www.hymatik.com | Hvidkaervej 27a, DK-5250 Odense SV, Denmark

Specification

Pressure ratings:
Maximum allowable operating pressure: 70 bar
Rated fatigue pressure: 56 bar

Connections:
Several threaded port options available, flange faced ports available on 80CN.

Connection style	*Model*		
	15CN	40CN	80CN
BSPF(G)	1", ¾"	1¼", 1½"	1½", 2"
SAE	12, 16	16, 24	24, 32
ISO 6149	M27	M33	M42, M48
Metric 3000-M			2"

Filter housing:
Head material aluminium.
Bowl material hard anodized aluminium.

Seal material:
Nitrile or fluoroelastomer.

Operating temperature range:
Seal material Nitrile: -40°C to +100°C.
Seal material Fluoroelastomer: -20°C to +120°C.

Bypass valve & indicator settings:
Table following gives bypass valve and corresponding indicator setting.

Bypass	*Indicator*
1.7 bar	1.2 bar
3.5 bar	2.5 bar

Filter element:
Degree of filtration:
Determined by Multipass-test according to ISO 16889.

Flow fatigue characteristics:
Filter media is supported so that the optimal fatigue life is achieved (ISO 3724).

Microglass III (available by request)
Supported with epoxy coated metal wire mesh, end cap material reinforced composite and metal inner core. Collapse rating 20 bar (ISO 2941).

Ecoglass III
Supported with plastic net, end cap material reinforced composite. No metal parts. Collapse rating 10 bar (ISO 2941).
Filter element can only be used together with bowl including Eco-adaptor.
Note: Ecoglass III contributes to ISO 14001 quality.

Par-Gel:
Water removal media absorbent copolymer laminate media with ability to remove free water from mineral based and synthetic fluids available for 40CN and 80CN.

Indicator options:
- visual M3. - electrical T1.
- electronic F1(PNP). - electronic F2(NPN).
For indicator details see catalogue section 6.

Weights (kg):

Model	*Length 1*	*Length 2*
15CN	1.1	1.6
40CN	2.0	2.5
80CN	5.6	6.9

Fluid compatibility:
Suitable for use with mineral and vegetable oils, and some synthetic oils. For other fluids, please consult Parker Filtration.

15CN

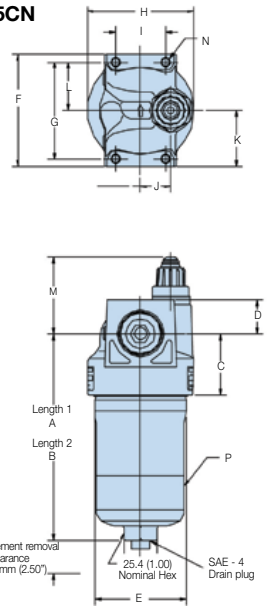

40CN

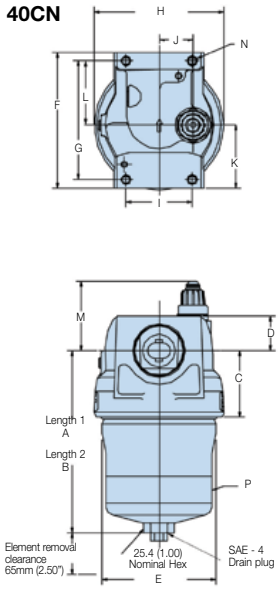

80CN

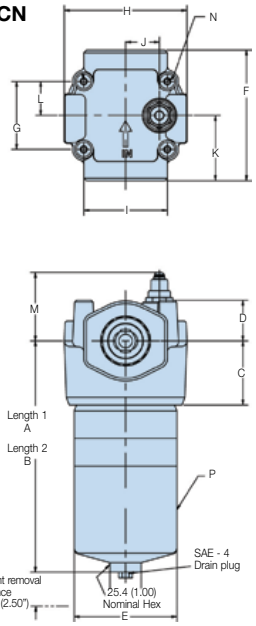

Dimensions in mm (inch)

Model	A	B	C	D	E	F	G	H	I	J	K	L	M*	N	P
15CN	156.6 (6.17)	250.7 (9.87)	46.5 (1.83)	25.4 (1.09)	71.1 (2.80)	85.9 (3.38)	73.2 (2.88)	82.6 (3.25)	38.1 (1.50)	22.9 (0.90)	42.9 (1.69)	36.6 (1.44)	53	4xM6-1.0x7.9 deep	20-27 Nm
40CN	170.8 (6.73)	262.4 (10.33)	62.0 (2.44)	32.6 (1.28)	107.2 (4.22)	127.0 (5.00)	111.0 (4.37)	121.9 (4.80)	62.0 (2.44)	31.8 (1.25)	58.8 (2.32)	60.2 (2.37)	53	4xM8-1.25x13 deep	57-68 Nm
80CN	280.9 (11.06)	401.6 (15.81)	77.7 (3.06)	49.5 (1.95)	124.8 (4.91)	158.7 (6.25)	82.6 (3.25)	151.4 (5.96)	101.6 (4.00)	41.1 (1.62)	79.4 (3.12)	41.3 (1.63)	69	4xM8-1.25x16 deep	80-95 Nm

Note: add 45mm for T and F indicators

Parker Hannifin
Hydraulic Filter Division Europe
FDHB500UK/15/40/80CN

Tel: +45 63 12 83 00 | Email: ps@hymatik.com | www.hymatik.com | Hvidkaervej 27a, DK-5250 Odense SV, Denmark

15/40/80CN Series

Medium Pressure Filters

80CN Flange Face Details (SAE 2” 3000-M)

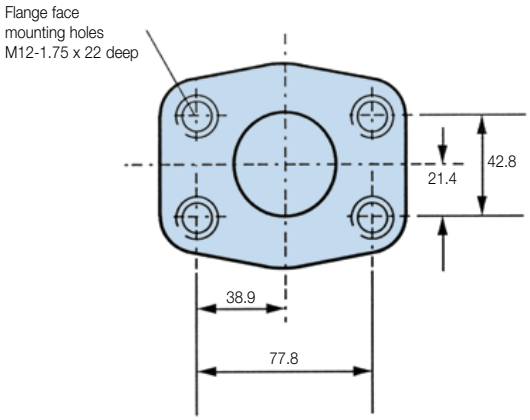

Pressure Drop Curves

With 1.7 bar bypass the recommended initial pressure drop is max 0.5 bar.
With 3.5 bar bypass the recommended initial pressure drop is max 1.0 bar.
If the medium used has a viscosity different from 30 cSt, pressure drop over the filter can be estimated as follows:
The total Δp = housing Δph + (element Δpe x working viscosity/30).

15CN-1 Elements

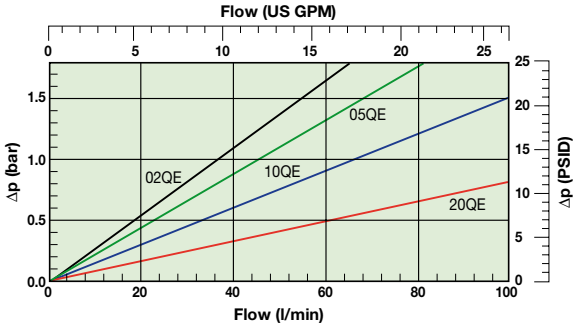

15CN Empty Housing

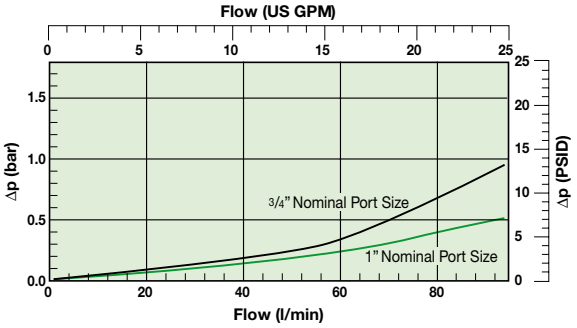

15CN-2 Elements

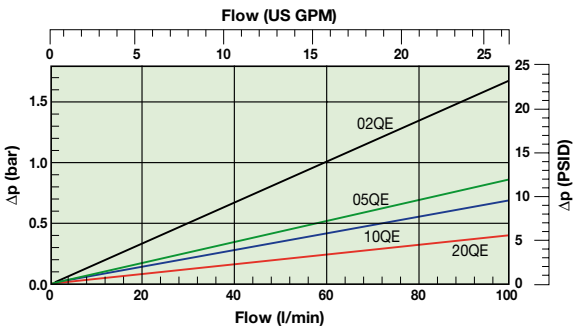

Pressure Drop Curves

40CN-1 Elements

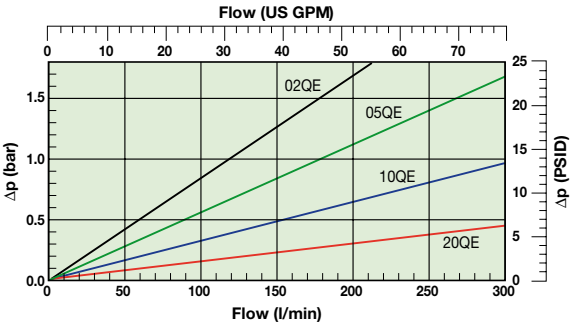

40CN Empty Housing

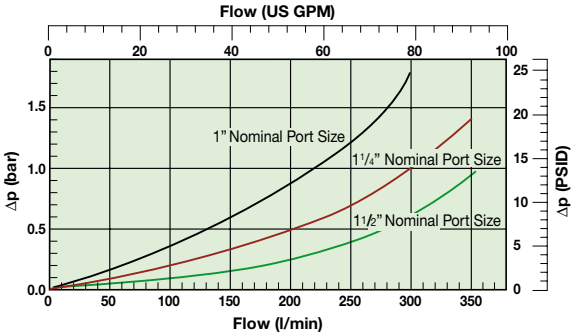

40CN-2 Elements

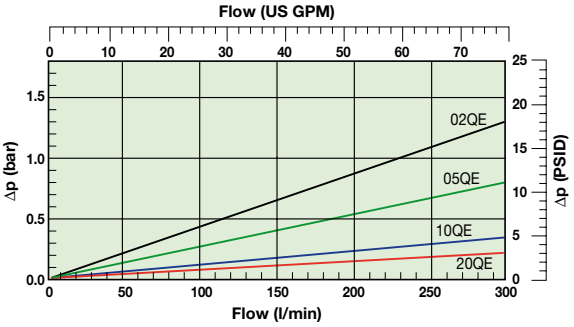

80CN-1 Elements

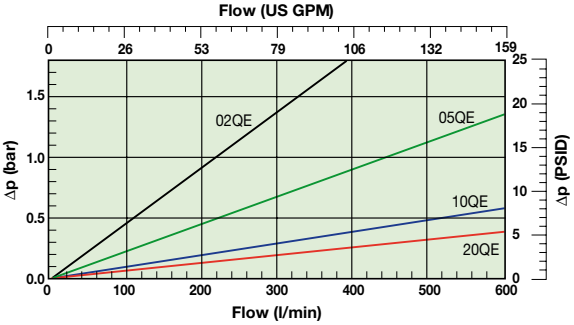

80CN Empty Housing

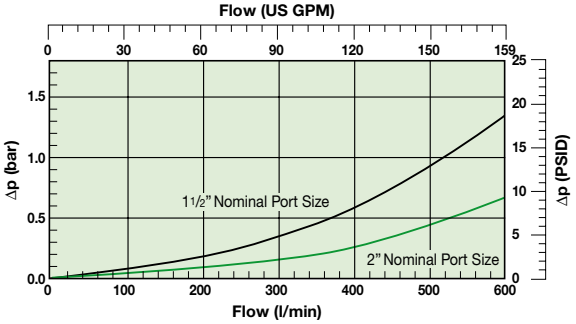

80CN-2 Elements

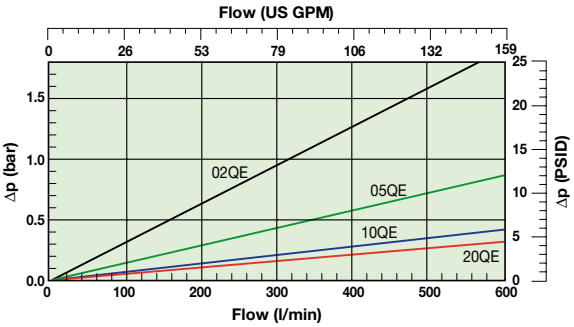

Tel: +45 63 12 83 00 | Email: ps@hymatik.com | www.hymatik.com | Hvidkaervej 27a, DK-5250 Odense SV, Denmark

15/40/80CN Series

Medium Pressure Filters

Element Service

A. Stop the system's power unit.
B. Relieve any system pressure in the filter line.
C. Drain the filter bowl if drain port option is provided.
D. Loosen and remove bowl.
E. Remove element by pulling downward with a slight twisting motion and discard.
F. Check bowl o-ring and anti-extrusion ring for damage and replace if necessary.
G. Lubricate element o-ring with system fluid and place on post in filter head.
H. Install bowl by rotating counter clockwise and tighten to specified torque.
   15CN – 20-27 Nm (15-20ft. lbs)
   40CN – 57-68 Nm (42-50ft. lbs)
   80CN – 80-95 Nm (60-70ft. lbs)
I. Confirm there are no leaks after powering the system.

CN Filters Parts List

Index	Description
1	**Head**
2	**Indicators**
	M3-visual auto reset: 1.2 bar M3-visual auto reset: 2.5 bar
3	T1-electrical: 1.2 bar c/w DIN 43650 connector T1-electrical: 2.5 bar c/w DIN 43650 connector F1-electronic PNP with 4 LEDs: 1.2 bar F1-electronic PNP with 4 LEDs: 2.5 bar F2-electronic NPN with 4 LEDs: 1.2 bar F2-electronic NPN with 4 LEDs: 2.5 bar
4	**Bypass valve**
	1.7 bar assembly 3.5 bar assembly
5	**Element (see replacement element part numbers)**
6	**Bowl**
	Single length with drain Single length with reusable core and drain Single length without drain
	Double length with drain Double length with reusable core and drain Double length without drain
7	**Bowl and dust seal**
	Nitrile Fluoroelastomer
8	**Drain plug: SAE-4**
	Nitrile Fluoroelastomer

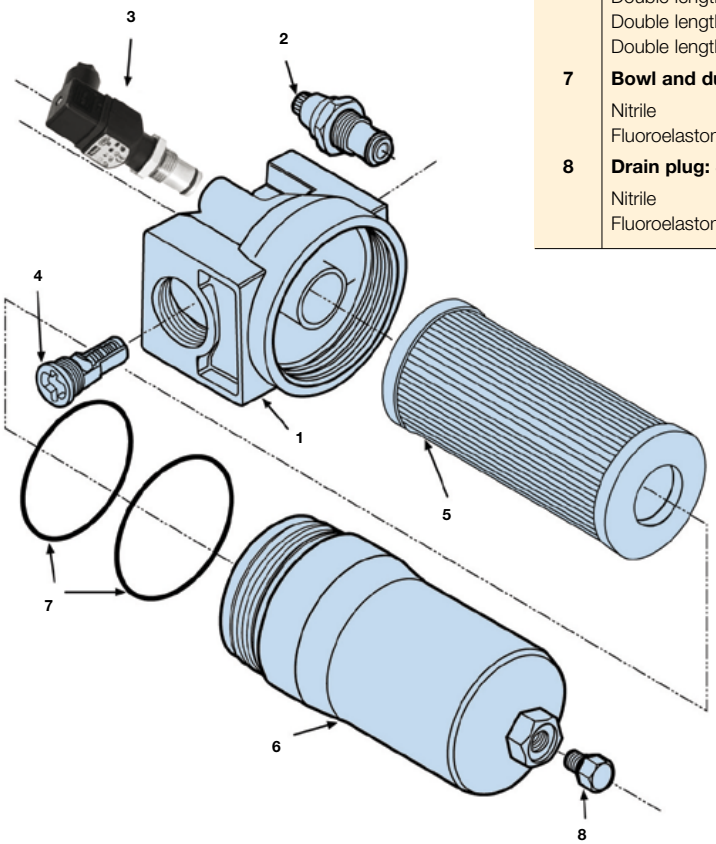

Tel: +45 63 12 83 00 | Email: ps@hymatik.com | www.hymatik.com | Hvidkaervej 27a, DK-5250 Odense SV, Denmark

Ordering Information

Standard products table

Part numbers	Supersedes	Flow (l/min)	Model number	Element length	Media rating (µ)	Seals	Indicator	Bypass settings	Ports	Replacement elements
15CN110QEVT1KG164	F315CN1R10QETW350C2C219	50	15CN	Length 1	10	Fluoroelastomer	Electrical	3.5 bar	G1"	**936700Q**
15CN110QEVM3KG164	F315CN1R10QEM250C2C219	50	15CN	Length 1	10	Fluoroelastomer	Visual	3.5 bar	G1"	**936700Q**
15CN120QEVT1KG164	F315CN1R20QETW350C2C219	80	15CN	Length 1	20	Fluoroelastomer	Electrical	3.5 bar	G1"	**936701Q**
15CN120QEVM3KG164	F315CN1R20QEM250C2C219	80	15CN	Length 1	20	Fluoroelastomer	Visual	3.5 bar	G1"	**936701Q**
15CN210QEVT1KG164	F315CN2R10QETW350C2C219	80	15CN	Length 2	10	Fluoroelastomer	Electrical	3.5 bar	G1"	**936704Q**
15CN210QEVM3KG164	F315CN2R10QEM250C2C219	80	15CN	Length 2	10	Fluoroelastomer	Visual	3.5 bar	G1"	**936704Q**
15CN220QEVT1KG164	F315CN2R20QETW350C2C219	100	15CN	Length 2	20	Fluoroelastomer	Electrical	3.5 bar	G1"	**936705Q**
15CN220QEVM3KG164	F315CN2R20QEM250C2C219	100	15CN	Length 2	20	Fluoroelastomer	Visual	3.5 bar	G1"	**936705Q**
40CN105QEVT1KG244	F340CN1R05QETW350E2E219	120	40CN	Length 1	5	Fluoroelastomer	Electrical	3.5 bar	G1½"	**936707Q**
40CN105QEVM3KG244	F340CN1R05QEM250E2E219	120	40CN	Length 1	5	Fluoroelastomer	Visual	3.5 bar	G1½"	**936707Q**
40CN110QEVT1KG244	F340CN1R10QETW350E2E219	180	40CN	Length 1	10	Fluoroelastomer	Electrical	3.5 bar	G1½"	**936708Q**
40CN110QEVM3KG244	F340CN1R10QEM250E2E219	180	40CN	Length 1	10	Fluoroelastomer	Visual	3.5 bar	G1½"	**936708Q**
40CN120QEVT1KG244	F340CN1R20QETW350E2E219	260	40CN	Length 1	20	Fluoroelastomer	Electrical	3.5 bar	G1½"	**936709Q**
40CN120QEVM3KG244	F340CN1R20QEM250E2E219	260	40CN	Length 1	20	Fluoroelastomer	Visual	3.5 bar	G1½"	**936709Q**
40CN205QEVT1KG244	F340CN2R05QETW350E2E219	200	40CN	Length 2	5	Fluoroelastomer	Electrical	3.5 bar	G1½"	**936711Q**
40CN205QEVM3KG244	F340CN2R05QEM250E2E219	200	40CN	Length 2	5	Fluoroelastomer	Visual	3.5 bar	G1½"	**936711Q**
40CN210QEVT1KG244	F340CN2R10QETW350E2E219	280	40CN	Length 2	10	Fluoroelastomer	Electrical	3.5 bar	G1½"	**936601Q**
40CN210QEVM3KG244	F340CN2R10QEM250E2E219	280	40CN	Length 2	10	Fluoroelastomer	Visual	3.5 bar	G1½"	**936601Q**
40CN220QEVT1KG244	F340CN2R20QETW350E2E219	320	40CN	Length 2	20	Fluoroelastomer	Electrical	3.5 bar	G1½"	**936712Q**
40CN220QEVM3KG244	F340CN2R20QEM250E2E219	320	40CN	Length 2	20	Fluoroelastomer	Visual	3.5 bar	G1½"	**936712Q**
80CN110QEVT1KG324	F380CN1R10QETW350F2F219	370	80CN	Length 1	10	Fluoroelastomer	Electrical	3.5 bar	G2"	**936602Q**
80CN110QEVM3KG324	F380CN1R10QEM250F2F219	370	80CN	Length 1	10	Fluoroelastomer	Visual	3.5 bar	G2"	**936602Q**
80CN120QEVT1KG324	F380CN1R20QETW350F2F219	420	80CN	Length 1	20	Fluoroelastomer	Electrical	3.5 bar	G2"	**936715Q**
80CN120QEVM3KG324	F380CN1R20QEM250F2F219	420	80CN	Length 1	20	Fluoroelastomer	Visual	3.5 bar	G2"	**936715Q**
80CN210QEVT1KG324	F380CN2R10QETW350F2F219	530	80CN	Length 2	10	Fluoroelastomer	Electrical	3.5 bar	G2"	**936718Q**
80CN210QEVM3KG324	F380CN2R10QEM250F2F219	530	80CN	Length 2	10	Fluoroelastomer	Visual	3.5 bar	G2"	**936718Q**
80CN220QEVT1KG324	F380CN2R20QETW350F2F219	600	80CN	Length 2	20	Fluoroelastomer	Electrical	3.5 bar	G2"	**936719Q**
80CN220QEVM3KG324	F380CN2R20QEM250F2F219	600	80CN	Length 2	20	Fluoroelastomer	Visual	3.5 bar	G2"	**936719Q**

Note: Filter assemblies ordered from the product configurator on next page are on extended lead times. Where possible, please make your selection from the table above.

CN Series Seal Kits	
Part Number	**Description**
S04449	NITRILE SEAL KIT 15CN
S04450	FLUOROELASTOMER SEAL KIT 15CN
S04447	NITRILE SEAL KIT 40CN
S04448	FLUOROELASTOMER SEAL KIT 40CN
S04458	NITRILE SEAL KIT 80CN
S04459	FLUOROELASTOMER SEAL KIT 80CN

Tel: +45 63 12 83 00 | Email: ps@hymatik.com | www.hymatik.com | Hvidkaervej 27a, DK-5250 Odense SV, Denmark

15/40/80CN Series

Medium Pressure Filters

Ordering Information (cont.)

Product Configurator

Box 1	Box 2	Box 3	Box 4	Box 5	Box 6	Box 7	Box 8
40CN	**2**	**10QE**	**V**	**M3**	**K**	**G24**	**4**

Box 1

Code	
Model	**Code**
Small size MP filter, T-port	**15CN**
Medium size MP filter, T-port	**40CN**
Large size MP filter, T-port	**80CN**

Box 2

Filter type	
Length	**Code**
Length 1	**1**
Length 2	**2**

Highlights Key (Denotes part number availability)

123	Item is standard
123	Item is standard green option
123	Item is semi standard
123	Item is non standard

Box 3

Degree of filtration					
Element media	**Glass fibre**				**Water Removal**
	Media code				
Ecoglass III element	**02QE**	**05QE**	**10QE**	**20QE**	**WR**

Note: When using Ecoglass III elements a bowl with reusable Eco-adaptor is required. Consult Parker.
Filter assemblies with Microglass III elements are available by request.
WR: Water removal media.

Box 4

Seal type	
Seal material	**Code**
Fluoroelastomer	**V**
Nitrile	B

Box 5

Indicator	
	Code
No indicator port	**N**
Visual indicator	**M3**
Electrical indicator	**T1**
Plugged	P
Electronic 4 LED, PNP, N.O.	F1
Electronic 4 LED, NPN, N.O.	F2
Electronic 4 LED, PNP, N.C.	F3
Electronic 4 LED, NPN, N.C.	F4

Box 6

Bypass valve		
Bypass valve	**Indicator**	**Code**
1.7 bar	1.2 bar	G
3.5 bar	2.5 bar	**K**

When filter includes a bypass valve but not an indicator, code denotes bypass setting.

Box 7

Filter connection	
Ports	**Code**
15CN: Thread G¾	G12
Thread G1	**G16**
Thread SAE 12	S12
Thread SAE 16	S16
Thread M27, ISO6149	M27
40CN: Thread G1¼	G20
Thread G1½	**G24**
Thread SAE 16	S16
Thread SAE 24	S24
Thread M33, ISO6149	M33
80CN: Thread G1½	G24
Thread G2	**G32**
Thread SAE 24	S24
Thread SAE 32	S32
Thread M42, ISO6149	M42
Thread M48, ISO6149	M48
SAE flange 2" 3000-M	**R32**

Box 8

Options	
Options	**Code**
Standard drain port on bowl	**4**
ATEX certified* (Category 2, non-electrical equipment)	EX

Note 1*: For ATEX classified filters add EX after the code.
ATEX certified filters with electrical indicator are available on request.
Visual indicators are classified as Category 2, non electrical equipment.
Filter assemblies with EX code will be supplied with a dedicated name plate.
Pls consult Parker Filtration for any questions related to the classification of our products.

Ecoglass III elements (Fluoroelastomer seals)				
Model	**02QE**	**05QE**	**10QE**	**20QE**
15CN-1	**936698Q**	**936699Q**	**936700Q**	**936701Q**
15CN-2	**936702Q**	**936703Q**	**936704Q**	**936705Q**
40CN-1	**936706Q**	**936707Q**	**936708Q**	**936709Q**
40CN-2	**936710Q**	**936711Q**	**936601Q**	**936712Q**
80CN-1	**936713Q**	**936714Q**	**936602Q**	**936715Q**
80CN-2	**936716Q**	**936717Q**	**936718Q**	**936719Q**

Conversion bowl assembly (to retrofit existing CN filter housings to use coreless elements)	
936758	15CN-1 coreless element bowl assembly
936759	15CN-2 coreless element bowl assembly
936760	40CN-1 coreless element bowl assembly
936761	40CN-2 coreless element bowl assembly
936763	80CN-1 coreless element bowl assembly
936764	80CN-2 coreless element bowl assembly

Replacement element part numbers for conventional assemblies

Elements with nitrile seals				
Model	**02Q**	**05Q**	**10Q**	**20Q**
15CN-1	928935Q	G04041Q	928934Q	930367Q
15CN-2	928953Q	G04169Q	928952Q	930368Q
40CN-1	926696Q	G04048Q	926835Q	930099Q
40CN-2	926697Q	G04167Q	926837Q	930118Q
80CN-1	932656Q	932657Q	932658Q	929899Q
80CN-2	932662Q	932663Q	932664Q	929923Q

Elements with Fluoroelastomer seals					
Model	**02Q**	**05Q**	**10Q**	**20Q**	**WR**
15CN-1	932610Q	G04189Q	932612Q	930369Q	-
15CN-2	932616Q	G04190Q	932618Q	930370Q	-
40CN-1	926716Q	G04191Q	926836Q	930100Q	931412
40CN-2	926717Q	G04192Q	926838Q	930119Q	931414
80CN-1	932659Q	932660Q	832661Q	929903Q	931416
80CN-2	932665Q	932666Q	932667Q	929927Q	931418

Degree of filtration						Code
Average filtration beta ratio ß (ISO 16889) / particle size µm [c]						
ßx(c)=2	**ßx(c)=10**	**ßx(c)=75**	**ßx(c)=100**	**ßx(c)=200**	**ßx(c)=1000**	
% efficiency, based on the above beta ratio (ßx)						Metal free
50.0%	**90.0%**	**98.7%**	**99.0%**	**99.5%**	**99.9%**	Ecoglass III
N/A	N/A	N/A	N/A	N/A	4.5	**02QE**
N/A	N/A	4.5	5	6	7	**05QE**
N/A	6	8.5	9	10	12	**10QE**
6	11	17	18	20	22	**20QE**

Please note the bolded options reflect standard options with a reduced lead-time of (4) weeks or less. Consult Parker Filtration on all other lead-time options.

Nominal flow (l/min) for filter assembly at viscosity 30cSt				
Housing, port size	**02QE**	**05QE**	**10QE**	**20QE**
15CN-1, G1	10	30	50	80
15CN-2, G1	30	70	80	100
40CN-1, G1½	60	120	180	260
40CN-2, G1½	80	200	280	320
80CN-1, G2	150	300	370	420
80CN-2, G2	180	420	530	600

* Fluoroelastomers are available under various registered trademarks, including Viton (a registered trademark of DuPont) and Fluorel (a registered trademark of 3M)

45M/45 Eco Series

Medium Pressure Filters
Max 260 l/min - 40 bar



Ideal for harsh and demanding environments

Approved for engine rooms and mines

The 45M Series utilizes a cast iron head and steel bowl design and can be specified with Microglass III or Ecoglass III filter media. Maximum pressure 40 bar. Maximum flow 260 l/min. Lower element replacement costs and lower disposal costs



Contact Information:

Parker Hannifin
Hydraulic Filter Division Europe

European Product Information Centre
Freephone: 00800 27 27 5374
(from AT, BE, CH, CZ, DE, EE, ES, FI, FR, IE, IT, PT, SE, SK, UK)
filtrationinfo@parker.com

www.parker.com/hfde

Product Features:

- 45M utilizes a cast iron head and steel bowl.
- Solves the problem of protecting system compoments at lower pressures.
- Maximum pressure 40 bar. Maximum flow 260 l/min.
- An ideal filter series for harsh environments.

Tel: +45 63 12 83 00 | Email: ps@hymatik.com | www.hymatik.com | Hvidkaervej 27a, DK-5250 Odense SV, Denmark

45M/45 Eco Series

Medium Pressure Filters

Features & Benefits

Features	Advantages	Benefits
Cast iron head, steel bowl	Can be used in applications where aluminium is not allowed	Approved for engine rooms and mines
	Rugged construction	Reliable filtration in all conditions
Reinforced Microglass III replacement elements	Multi-layered design produced high capacity and efficiency	Great performance value
		Reliable performance throughout element life
	Wire support reduces pleat bunching, keeps performance consistent	Reduces downtime, maximises element life
Visual, electrical or electronic indicators available	Check element condition at glance	Optimise element life, prevent bypassing
	Right style for the application	Matches your system electrical connections
Test points in the filter head	Pressure measurement and Δp possible	Quick testing and maintenance
Coreless Ecoglass III replacement elements	No metal content in element	Environmentally friendly disposal by incineration
	Reduced overall weight of 50%	
	Easy compaction of used elements	Lower element replacement costs
	Eco adaptors available	Lower disposal costs
		Retrofit coreless design to housings already installed

Typical Applications

- Industrial power units
- Mobile construction equipment
- Forestry equipment



The Parker Filtration 45M/45 Eco Series Medium Pressure Filters.

The 45M/45 Eco Series of medium pressure filters offer an ideal solution to the problem of protecting system components at lower pressures.

The robust filter housing of the 45M allows the product to be applied in harsh environments. Filter bowl is designed for rapid element replacement. ECO Series elements reduces the waste over 50% due to the reusable element core.

Tel: +45 63 12 83 00 | Email: ps@hymatik.com | www.hymatik.com | Hvidkaervej 27a, DK-5250 Odense SV, Denmark

Specification

Pressure ratings:
Maximum allowable operating pressure 40 bar.
Filter housing pressure pulse fatigue tested: 10^6 pulses 0-40 bar.

Connections:
Threads G1, G1¼ (ISO 228/1) or flange SAE 1½" 3000-M.

Filter housing:
Head material cast iron (GSI).
Bowl material steel.

Seal material:
Nitrile or Fluoroelastomer.

Operating temperature range:
Seal material Nitrile: -40° to +100°C.
Seal material Fluoroelastomer: -20° to +120°C.

Bypass valve:
Opening pressure 3.5 bar.

Filter element:
Degree of filtration:
Determined by Multipass-test according to ISO 16889.

Flow fatigue characteristics:
Filter media is supported so that the optimal fatigue life is achieved (ISO 3724).

Microglass III:
Supported with epoxy coated metal wire mesh, end cap material reinforced composite and metal inner core.
Collapse rating 20 bar (ISO 2941).

Ecoglass III:
Supported with plastic net, end cap material reinforced composite.
No metal parts. Collapse rating 10 bar (ISO 2941).
Filter element can only be used together with reusable FEA Eco-adapter.
Note: Ecoglass III contributes to ISO 14001 quality.

Indicator options:
Indicating differential pressure: 2.5 ± 0.3 bar.
- visual M3.
- electrical T1.
- electronic F1(PNP).
- electronic F2(NPN).

For indicator details see catalogue section 6.

Fluid compatibility:
Suitable for use with mineral and vegetable oils, and some synthetic oils. For other fluids, please consult Parker Filtration.

Installation Details

Type	A	B	C	Weight (kg)	D
Length 1	116 (4.57)	237 (9.33)	192 (7.56)	5.9	G1, G1¼, G1½, Flange SAE 1½" 3000-M
Length 2	208 (8.20)	330 (13.00)	285 (11.22)	6.2	
Length 3	329 (13.00)	450 (17.72)	405 (15.94)	6.6	
Length 4	428 (16.85)	550 (21.65)	505 (19.90)	7.0	

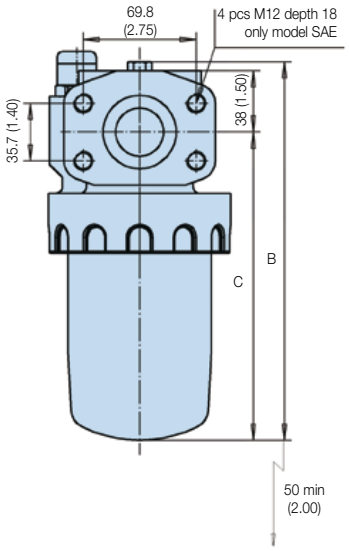

mm
(inches)

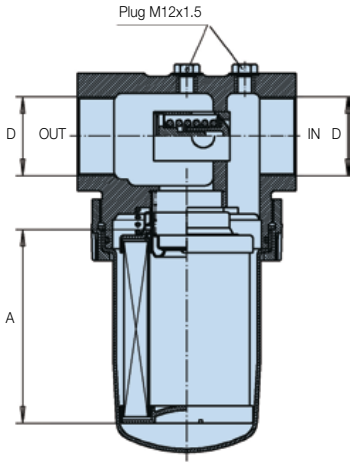

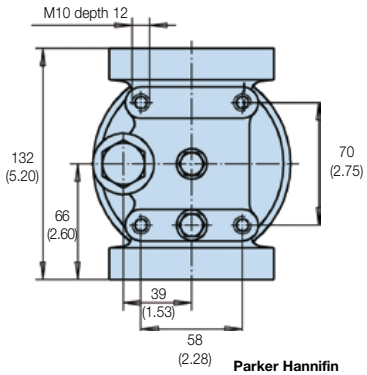

45M/45 Eco Series

Medium Pressure Filters

Pressure Drop Curves

The recommended level of the initial pressure drop is max 1.0 bar.
If the medium used has a viscosity different from 30 cSt, pressure drop over the filter can be estimated as follows:
The total Δp = housing Δph + (element Δpe x working viscosity/30).

45M Series Empty Housing

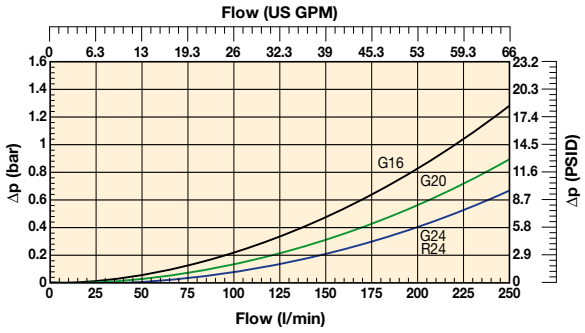

45M-1 Element with Microglass III

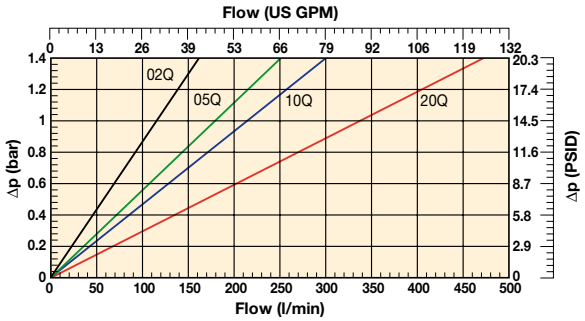

45M-2 Element with Microglass III

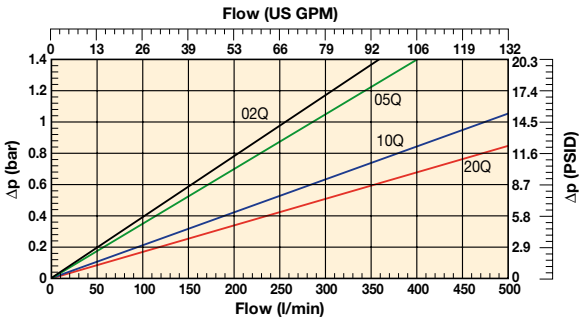

45M-3 Element with Microglass III

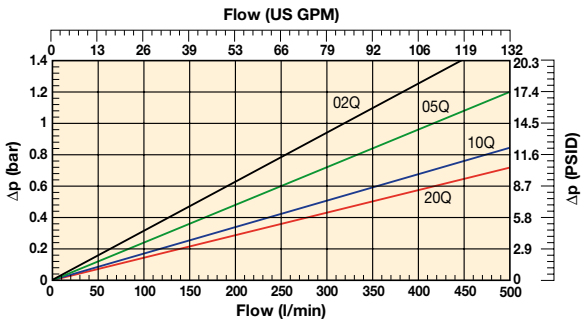

45M-4 Element with Microglass III

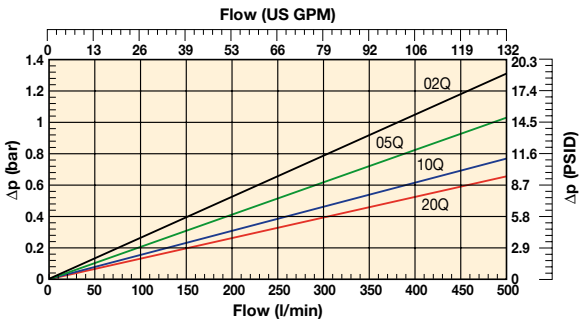

45M-1 Element with Ecoglass III

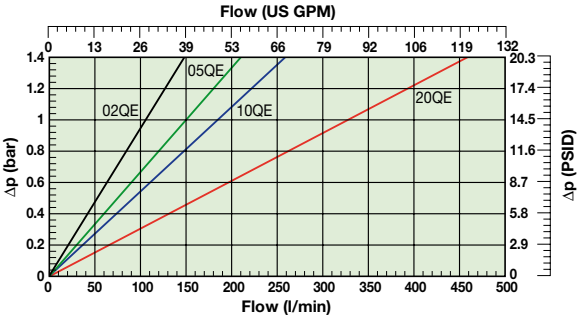

45M-2 Element with Ecoglass III

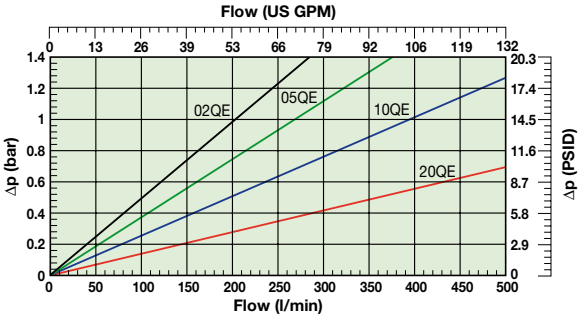

45M-3 Element with Ecoglass III

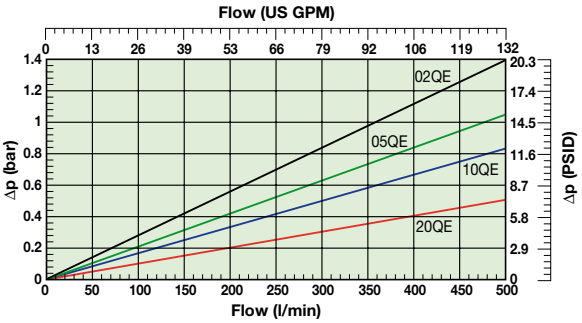

45M-4 Elements with Ecoglass III

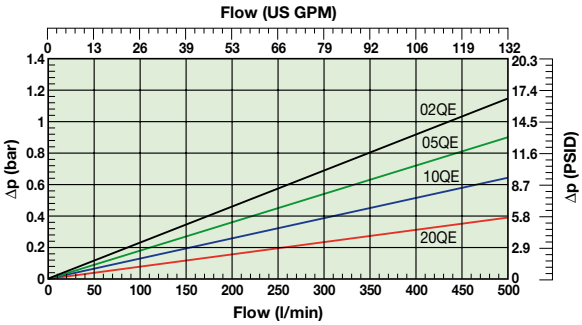

Ordering Information

Standard products table

Product numbers	Supersedes	Flow (l/min)	Model number	Element length	Media rating (µ)	Seals	Indicator	Bypass settings	Ports	Replacement elements	Supersedes
45M110QBPKG161	FF1145.Q010.BS35.GT16	140	45M	Length 1	10	Nitrile	Plugged	3.5 bar	G1"	**938962Q**	FC7005.Q010.BK
45M120QBPKG161	FF1145.Q020.BS35.GT16	160	45M	Length 1	20	Nitrile	Plugged	3.5 bar	G1"	**938963Q**	FC7005.Q020.BK
45M110QEBPKG161	FF1145.QE10.BS35.GT16	140	45M	Length 1	10	Nitrile	Plugged	3.5 bar	G1"	**938978Q**	FC7005.QE10.BK
45M120QEBPKG161	FF1145.QE20.BS35.GT16	160	45M	Length 1	20	Nitrile	Plugged	3.5 bar	G1"	**938979Q**	FC7005.QE20.BK
45M210QBPKG201	FF1146.Q010.BS35.GT20	200	45M	Length 2	10	Nitrile	Plugged	3.5 bar	G1¼"	**938966Q**	FC7006.Q010.BK
45M220QBPKG201	FF1146.Q020.BS35.GT20	220	45M	Length 2	20	Nitrile	Plugged	3.5 bar	G1¼"	**938967Q**	FC7006.Q020.BK
45M210QEBPKG201	FF1146.QE10.BS35.GT20	200	45M	Length 2	10	Nitrile	Plugged	3.5 bar	G1¼"	**938982Q**	FC7006.QE10.BK
45M220QEBPKG201	FF1146.QE20.BS35.GT20	220	45M	Length 2	20	Nitrile	Plugged	3.5 bar	G1¼"	**938983Q**	FC7006.QE20.BK
45M310QBPKG241	FF1147.Q010.BS35.GT24	230	45M	Length 3	10	Nitrile	Plugged	3.5 bar	G1½"	**938970Q**	FC7007.Q010.BK
45M320QBPKG241	FF1147.Q020.BS35.GT24	250	45M	Length 3	20	Nitrile	Plugged	3.5 bar	G1½"	**938971Q**	FC7007.Q020.BK
45M310QEBPKG241	FF1147.QE10.BS35.GT24	230	45M	Length 3	10	Nitrile	Plugged	3.5 bar	G1½"	**938986Q**	FC7007.QE10.BK
45M320QEBPKG241	FF1147.QE20.BS35.GT24	250	45M	Length 3	20	Nitrile	Plugged	3.5 bar	G1½"	**938987Q**	FC7007.QE20.BK

Note: Filter assemblies ordered from the product configurator below are on extended lead times. Where possible, please make your selection from the table above.
Note 1: Part numbers featured with bold highlighted codes will ensure a 'standard' product selection.

45M Series Seal Kits	
Part Number	**Description**
918045049	NITRILE SEAL KIT 45M
918045050	NITRILE SEAL KIT 45M Eco
918045054	FLUOROELASTOMER SEAL KIT 45M
918045055	FLUOROELASTOMER SEAL KIT 45M Eco

45M/45 Eco Series

Medium Pressure Filters

Ordering Information (cont.)

Product configurator

Box 1	Box 2	Box 3	Box 4	Box 5	Box 6	Box 7	Box 8
45M	**2**	**10Q**	**B**	**M3**	**K**	**G20**	**1**

Box 1

Code	
Model	**Code**
Medium pressure filter, T-port	**45M**

Highlights Key (Denotes part number availability)

123	Item is standard
123	Item is standard green option
123	Item is semi standard
123	Item is non standard

Box 2

Filter type	
Length	**Code**
Length 1	**1**
Length 2	**2**
Length 3	**3**
Length 4	**4**

Box 3

Degree of filtration				
Element media	**Glass fibre**			
	Media code			
Microglass III element	**02Q**	**05Q**	**10Q**	**20Q**
Ecoglass III element	**02QE**	**05QE**	**10QE**	**20QE**

Note: When using Ecoglass III elements a bowl with reusable Eco-adaptor is required.

Box 4

Seal type	
Seal material	**Code**
Nitrile	**B**
Fluoroelastomer	V

Box 5

Indicator	
	Code
Plugged with steel plug	**P**
Visual indicator	**M3**
Electrical indicator	**T1**
Electronic 4 LED, PNP, N.O.	F1
Electronic 4 LED, NPN, N.O.	F2
Electronic 4 LED, PNP, N.C.	F3
Electronic 4 LED, NPN, N.C.	F4

Box 6

Bypass valve			
Bypass valve	**Indicator**	**Code**	
3.5 bar	2.5 bar	**K**	
No bypass	7.0 bar	N	+ Box 8: code 2
No bypass	No indicator (P)	X	+ Box 8: code 2

When filter includes a bypass valve but not an indicator, code denotes bypass setting.

Box 7

Filter connection					
Connections	**Code**	Length 1	Length 2	Length 3	Length 4
Thread G 1	**G16**	**S**	**S**	**S**	x
Thread G 1 ¼	**G20**	**S**	**S**	**S**	**S**
Thread G 1 ½	**G24**	x	**S**	**S**	**S**
SAE flange 1 ½" 3000-M	R24	x	x	x	x

Availability: **S** = standard option
x = non-standard, ask for availability

Box 8

Options	
Options	**Code**
Standard	**1**
No bypass	2
ATEX certified* (Category 2, non-electrical equipment)	EX

Note 1*: For ATEX classified filters add EX after the code.
ATEX certified filters with electrical indicator are available on request.
Visual indicators are classified as Category 2, non electrical equipment.
Filter assemblies with EX code will be supplied with a dedicated name plate.
Pls consult Parker Filtration for any questions related to the classification of our products.

Replacement elements with nitrile seals				
Media	Length 1	Length 2	Length 3	Length 4
02Q	**938960Q**	**938964Q**	**938968Q**	**938972Q**
05Q	**938961Q**	**938965Q**	**938969Q**	**938973Q**
10Q	**938962Q**	**938966Q**	**938970Q**	**938974Q**
20Q	**938963Q**	**938967Q**	**938971Q**	**938975Q**
02QE	**938976Q**	**938980Q**	**938984Q**	**938988Q**
05QE	**938977Q**	**938981Q**	**938985Q**	**938989Q**
10QE	**938978Q**	**938982Q**	**938986Q**	**938990Q**
20QE	**938979Q**	**938983Q**	**938987Q**	**938991Q**

Nominal flow (l/min) at viscosity 30 cSt - connection size				
Filter length	Media	G16	G20	G24 & R24
Length 1	02Q/02QE	80	80	80
	05Q/05QE	120	120	120
	10Q/10QE	140	150	150
	20Q/20QE	160	180	200
Length 2	02Q/02QE	130	150	170
	05Q/05QE	150	170	190
	10Q/10QE	170	200	230
	20Q/20QE	190	220	250
Length 3	02Q/02QE	150	170	190
	05Q/05QE	170	190	210
	10Q/10QE	190	210	230
	20Q/20QE	200	230	250
Length 4	02Q/02QE	170	190	210
	05Q/05QE	180	210	230
	10Q/10QE	190	220	240
	20Q/20QE	200	230	260

Degree of filtration						Code	
Average filtration beta ratio ß (ISO 16889) / particle size µm [c]							
ßx(c)=2	**ßx(c)=10**	**ßx(c)=75**	**ßx(c)=100**	**ßx(c)=200**	**ßx(c)=1000**		
% efficiency, based on the above beta ratio (ßx)						Disposable	Metal free
50.0%	**90.0%**	**98.7%**	**99.0%**	**99.5%**	**99.9%**	Microglass III	Ecoglass III
N/A	N/A	N/A	N/A	N/A	4.5	**02Q**	02QE
N/A	N/A	4.5	5	6	7	**05Q**	05QE
N/A	6	8.5	9	10	12	**10Q**	**10QE**
6	11	17	18	20	22	**20Q**	**20QE**

Parker Hannifin
Hydraulic Filter Division Europe
FDHB500UK/45M/45 Eco

15P/30P Series

High Pressure Filters
Max 200 l/min - 207 bar



When it comes to lightweight filter solutions

Compact aluminium housing and lightweight design

The 15P/30P Series utilizes a compact aluminium housing with 2 head sizes and 2 bowl lengths, large ports and wide flow paths. Maximum pressure 207 bar. Maximum flow 200 l/min. Efficient filtration and maximized element life.



Contact Information:

Parker Hannifin
Hydraulic Filter Division Europe

European Product Information Centre
Freephone: 00800 27 27 5374
(from AT, BE, CH, CZ, DE, EE, ES, FI, FR, IE, IT, PT, SE, SK, UK)
filtrationinfo@parker.com

www.parker.com/hfde

Product Features:

- 15P/30P utilizes a compact aluminium housing with 2 head sizes and 2 bowl lengths.
- Microglass III filter media.
- Maximum pressure 207 bar. Maximum flow 200 l/min.
- A quality filter for better control and long component life.

Tel: +45 63 12 83 00 | Email: ps@hymatik.com | www.hymatik.com | Hvidkaervej 27a, DK-5250 Odense SV, Denmark

15P/30P Series

High Pressure Filters

Features & Benefits

Features	Advantages	Benefits
Compact aluminium housing	Light weight but still robust design	Reliable and continuous operation both in mobile and industrial applications
Two head sizes and two bowl lengths	Optimised sizing	Efficient filtration
		Right filter for each application
Large ports and wide flow paths	Low differential pressure across housing and element	Higher flow rates possible
		Less lost energy
Microglass III replacement elements	Multi-layered design produced high capacity and efficiency	Great performance value
		Reliable performance throughout element life
	Wire support reduces pleat bunching, keeps performance consistent	Reduces downtime, maximises element life
Visual, electrical and electronic indicators available	Check element condition at a glance	Optimise element life, prevent bypassing
	Right style for the application	Matches your system electrical connections

Typical Applications

- Saw mills
- Aircraft ground support equipment
- Asphalt pavers
- Hydraulic fan drives
- Power steering circuits
- Domestic refuse vehicles
- Cement trucks
- Servo control protection
- Logging equipment



The Parker Filtration 15P/30P Series High Pressure Filters.

These application examples have one thing in common...the need for clean hydraulic fluid.

Modern high pressure hydraulic systems are demanding. Better controls and long component life are expected. To deliver the high standards of performance, hydraulic components are built with tighter tolerances which increases their sensitivity to contamination.

That's where Parker pressure filters come into play. They filter out ingressed contamination before it jams a valve or scores a cylinder. They block pump generated debris before it gets to servo or proportional valves. Parker pressure filters are a key ingredient in meeting today's system demands.

Put your hydraulic systems in the care of Parker Filtration. We are committed to designing and building the best filters available to industry.

Tel: +45 63 12 83 00 | Email: ps@hymatik.com | www.hymatik.com | Hvidkaervej 27a, DK-5250 Odense SV, Denmark

Specification

Pressure ratings:
Maximum allowable operating pressure 207 bar.
Filter housing pressure pulse fatigue tested: 138 bar.

Connections:
Inlet and outlet connections are threaded.

Connection style	*Model*	
	15P	30P
BSPF(G)	3/4"	1"
ISO 6149	M27	M33

Filter housing:
Head material extruded aluminium (anodised 6061-T6).
Bowl material impacted aluminium (anodised 6061-T6).

Seal material:
Nitrile or Fluoroelastomer.

Operating temperature range:
Seal material Nitrile: -40 °C to +100 °C.
Seal material Fluoroelastomer: -20 °C to +120 °C.

Bypass valve:
Opening pressure 3.5 bar.

Filter element:
Degree of filtration:
Determined by multipass-test according to ISO 16889.

Flow fatigue characteristics:
Filter media is supported so that the optimal fatigue life is achieved (ISO 3724).

Microglass III:
Supported with epoxy coated metal wire mesh, end cap material reinforced composite and metal inner core. Collapse rating 24 bar (ISO 2941).

High collapse elements:
High collapse elements available. For details please contact Parker Filtration.

Indicator options:
Indicating differential pressure: 2.5 ± 0.3 bar.
- visual M3.
- electrical T1.
- electronic F1(PNP).
- electronic F2(NPN).

For indicator details see catalogue section 6.

Weights (kg):

Model	*Length 1*	*Length 2*
15P	1.6	2.1
30P	2.9	3.9

Fluid compatibility:
Suitable for use with mineral and vegetable oils, and some synthetic oils. For other fluids, please consult Parker Filtration.

Installation Details

15P Series

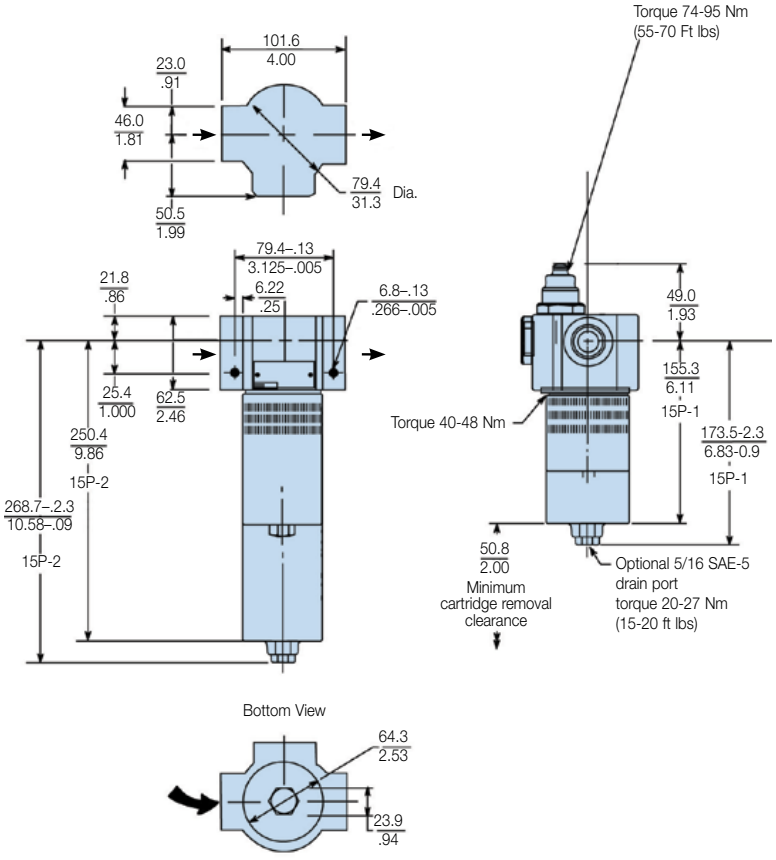

Parker Hannifin
Hydraulic Filter Division Europe
FDHB500UK/15P/30P

15P/30P Series

High Pressure Filters

Installation Details (cont.)

30P Series

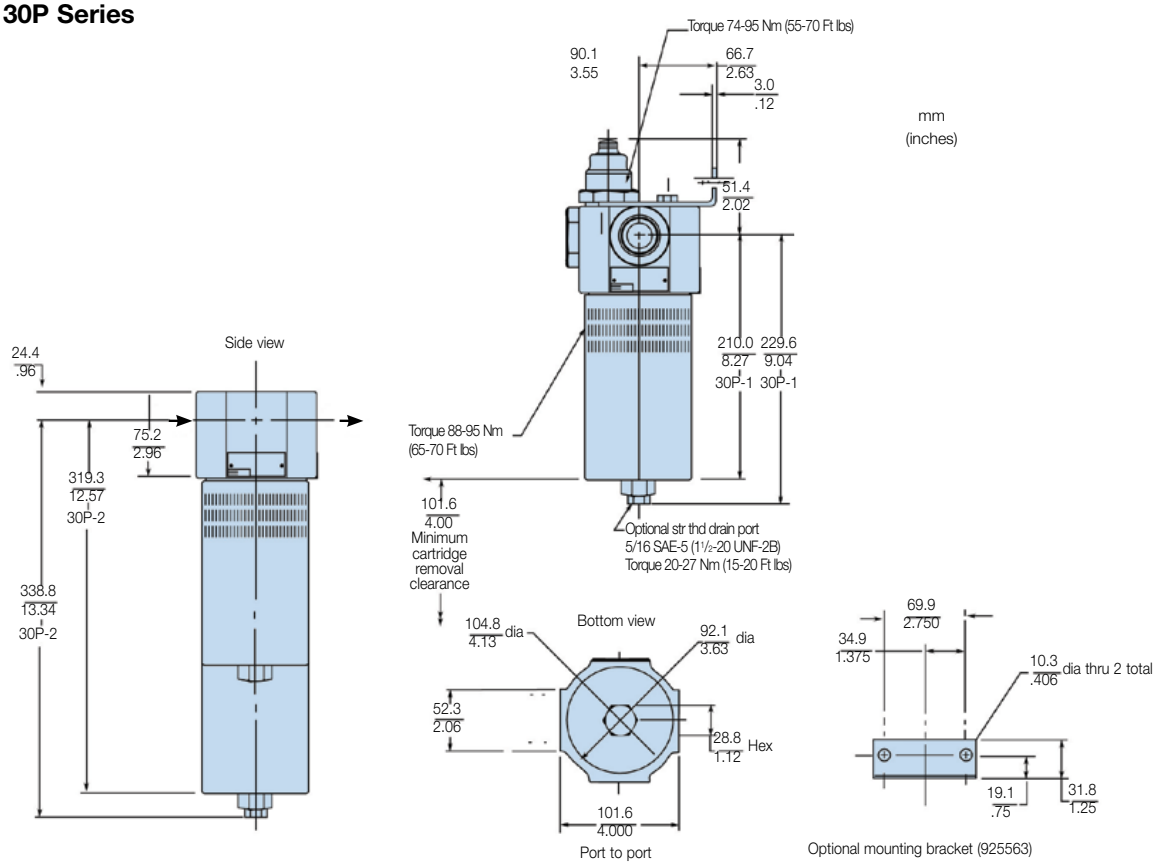

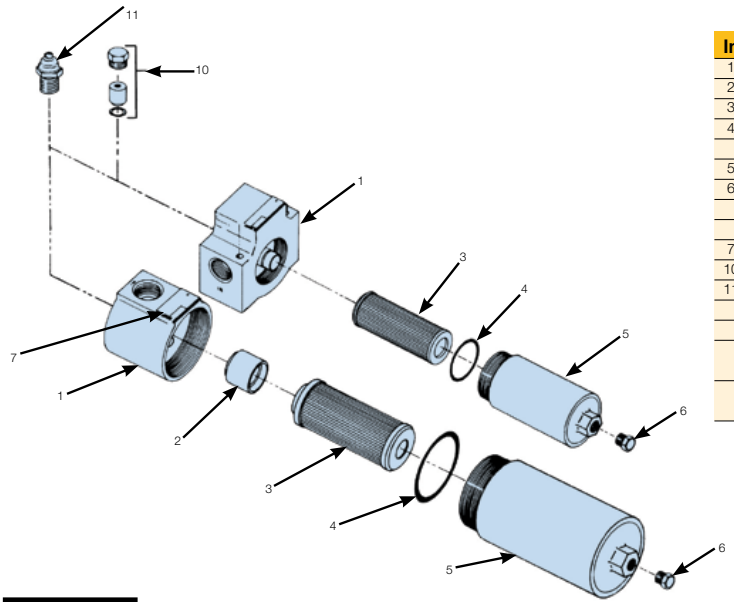

Index	Description	15P	30P
1	Head		
2	Bypass assembly		
3	Element	See chart in product configurator	
4	Bowl O-ring – Nitrile	OR04074	OR06037
	Bowl O-ring – fluoroelastomer	V92138	V92151
5	Bowl		
6	Drain plug – c/w buna seal		
	Drain plug – c/w		
	Fluoroelastomer seal		
7	Nameplate		
10	Blank indicator kit		
11	Indicators		
	M3 – Visual auto reset indicator	FMUM3KVMU14M	
	T1 – Electrical indicator	FMUT1KVMU14M	
	F1 – Electronic indicator PNP with 4 LED	FMUF1KVMU14M	
	F2 – Electronic indicator NPN with 4 LED	FMUF2KVMU14M	

Pressure Drop Curves

The recommended level of the initial pressure drop is max. 1.2 bar.
If the medium used has a viscosity different from 30 cSt, pressure drop over the filter can be estimated as follows:
Δp = (Δp30 x viscosity of medium used) / 30 cSt.

15P Empty Housing

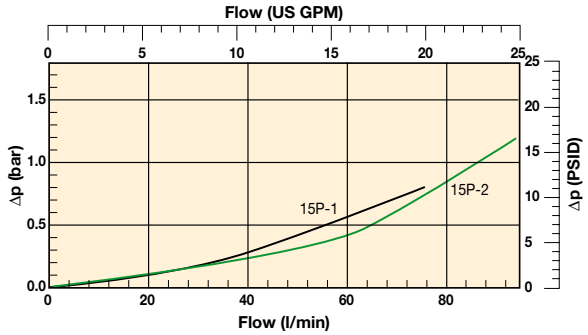

30P Empty Housing

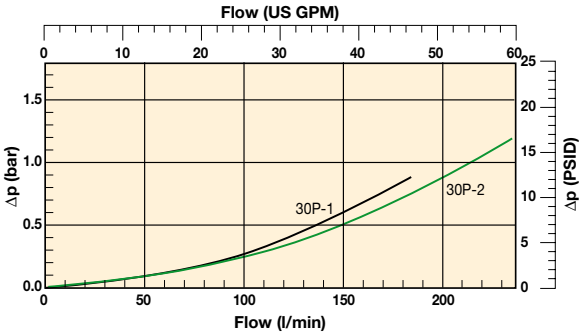

15P-1 Elements

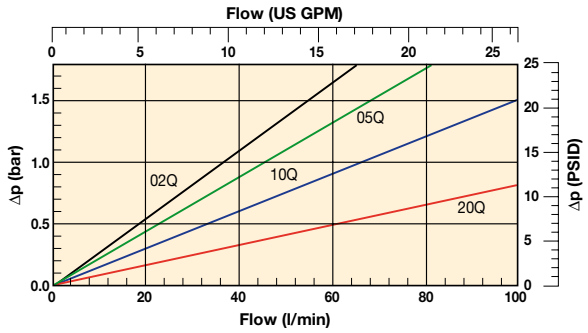

30P-1 Elements

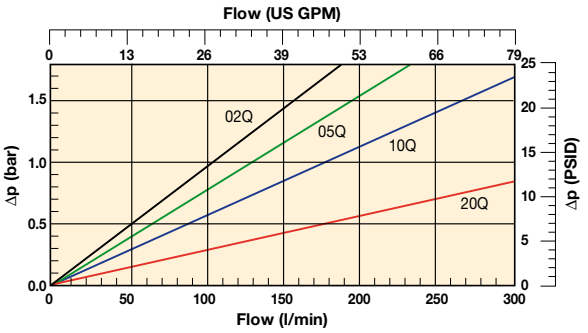

15P-2 Elements

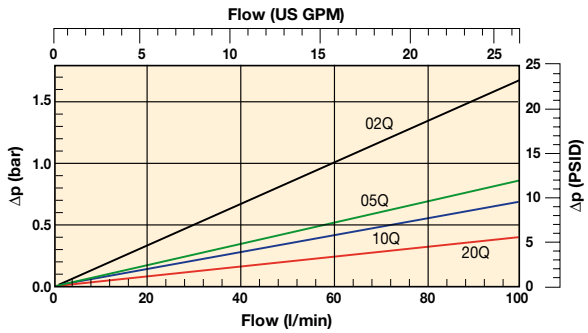

30P-2 Elements

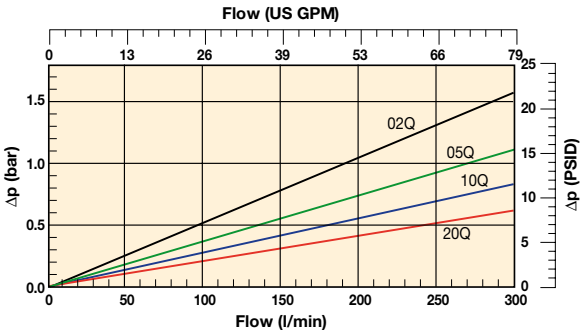

15P/30P Series

High Pressure Filters

Ordering Information

Standard products table

Part number	Supersedes	Flow (l/min)	Model number	Element length	Media rating (µ)	Seals	Indicator	Bypass settings	Ports	Replacement elements
15P110QBM3KG121	15P-1-10Q-M2-50-B2B2-1	45	15P	Length 1	10	Nitrile	Visual	3.5 bar	G¾"	**939102Q**
15P110QBT1KG121	15P-1-10Q-TW3-50-B2B2-1	45	15P	Length 1	10	Nitrile	Electrical	3.5 bar	G¾"	**939102Q**
15P210QBM3KG121	15P-2-10Q-M2-50-B2B2-1	70	15P	Length 2	10	Nitrile	Visual	3.5 bar	G¾"	**939106Q**
15P210QBT1KG121	15P-2-10Q-TW3-50-B2B2-1	70	15P	Length 2	10	Nitrile	Electrical	3.5 bar	G¾"	**939106Q**
30P110QBM3KG161	30P-1-10Q-M2-50-C2C2-1	120	30P	Length 1	10	Nitrile	Visual	3.5 bar	G1"	**939110Q**
30P110QBT1KG161	30P-1-10Q-TW3-50-C2C2-1	120	30P	Length 1	10	Nitrile	Electrical	3.5 bar	G1"	**939110Q**
30P210QBM3KG161	30P-2-10Q-M2-50-C2C2-1	170	30P	Length 2	10	Nitrile	Visual	3.5 bar	G1"	**939114Q**
30P210QBT1KG161	30P-2-10Q-TW3-50-C2C2-1	170	30P	Length 2	10	Nitrile	Electrical	3.5 bar	G1"	**939114Q**

Note: Filter assemblies ordered from the product configurator below are on extended lead times. Where possible, please make your selection from the table above.

Note 1: Part numbers featured with bold highlighted codes will ensure a 'standard' product selection.
Note 2: Alternate displayed part number selection will require you to contact Parker Filtration for availability.

Product configurator

Box 1	Box 2	Box 3	Box 4	Box 5	Box 6	Box 7	Box 8
15P	**1**	**10Q**	**B**	**M3**	**K**	**G12**	**1**

Box 1

Code	
Model	**Code**
High pressure filter, T-port	**15P**
High pressure filter, T-port	**30P**

Highlights Key (Denotes part number availability)

123	Item is standard
123	Item is standard green option
123	Item is semi standard
123	Item is non standard

Box 2

Filter type	
Length	**Code**
Length 1	**1**
Length 2	**2**

Box 3

Degree of filtration				
Element media	**Glass fibre**			
	Media code			
Microglass III element	**02Q**	**05Q**	**10Q**	**20Q**

Box 4

Seal type	
Seal material	**Code**
Nitrile	**B**
Fluoroelastomer	V

Box 5

Indicator	
	Code
Plugged with steel plug	**P**
Visual indicator	**M3**
Electrical indicator	**T1**
No indicator port	N
Electronic 4 LED, PNP, N.O.	F1
Electronic 4 LED, NPN, N.O.	F2
Electronic 4 LED, PNP, N.C.	F3
Electronic 4 LED, NPN, N.C.	F4

Box 6

Bypass and indicator settings		
Bypass valve	**Indicator**	**Code**
3.5 bar	2.5 bar	**K**

When filter includes a bypass valve but not an indicator, code denotes bypass setting.

Box 7

Filter connection	
Connections	**Code**
15P: Thread G¾	**G12**
Thread M27, ISO 6149	M27
30P: Thread G 1	**G16**
Thread M33, ISO 6149	M33

Box 8

Options	
Options	**Code**
Standard	**1**
Drain port on bowl	4

Replacement elements with nitrile seals				
Media	15P-1	15P-2	30P-1	30P-2
02Q	**939100Q**	**939104Q**	**939108Q**	**939112Q**
05Q	**939101Q**	**939105Q**	**939109Q**	**939113Q**
10Q	**939102Q**	**939106Q**	**939110Q**	**939114Q**
20Q	**939103Q**	**939107Q**	**939111Q**	**939115Q**

Nominal flow (l/min) at viscosity 30 cSt				
Filter model	02Q	05Q	10Q	20Q
15P-1	25	30	45	70
15P-2	40	60	70	90
30P-1	70	90	120	170
30P-2	120	150	170	200

Degree of filtration						Code
Average filtration beta ratio ß (ISO 16889) / particle size µm [c]						
ßx(c)=2	**ßx(c)=10**	**ßx(c)=75**	**ßx(c)=100**	**ßx(c)=200**	**ßx(c)=1000**	
% efficiency, based on the above beta ratio (ßx)						Disposable
50.0%	**90.0%**	**98.7%**	**99.0%**	**99.5%**	**99.9%**	Microglass III
N/A	N/A	N/A	N/A	N/A	4.5	**02Q**
N/A	N/A	4.5	5	6	7	**05Q**
N/A	6	8.5	9	10	12	**10Q**
6	11	17	18	20	22	**20Q**

Tel: +45 63 12 83 00 | Email: ps@hymatik.com | www.hymatik.com | Hvidkaervej 27a, DK-5250 Odense SV, Denmark

100P Series

High Pressure Filters
Max 1000 l/min - 414 bar



When it comes to high flow capacity for high pressure systems

A high flow rate filter solution

The 100P Series design means on element change only the bowl end-cap has to be removed. Microglass III glassfibre media is standard. Maximum pressure 414 bar. Maximum flow 1000 l/min. An ideal solution where space is at a premium.



Contact Information:

Parker Hannifin
Hydraulic Filter Division Europe

European Product Information Centre
Freephone: 00800 27 27 5374
(from AT, BE, CH, CZ, DE, EE, ES, FI, FR, IE, IT, PT, SE, SK, UK)
filtrationinfo@parker.com

www.parker.com/hfde

Product Features:

- 100P design, only the bowl end-cap is removed on element change.
- Microglass III glassfibre media is standard.
- Maximum pressure 414 bar. Maximum flow 1000 l/min.
- An ideal solution where space is at a premium.

100P Series
High Pressure Filters

Features & Benefits

Features	Advantages	Benefits
High 414 bar pressure rating	Strong and robust housing for heavy duty applications	Reliable and continuous operation for open and closed loop applications
Flow rates up to 1000 l/min	Pressure filtration possible for high flow rates	Excellent protection of high performance machinery
Optional reverse flow valve	Allows reverse flow and prevents back wash of element	Ideal for applications where back flow is expected
Bottom access bowl	Only bottom of the bowl must be opened for element change	Easy service
Microglass III replacement elements	Multi-layered design produced high capacity and efficiency	Great performance value
		Reliable performance throughout element life
	Wire support reduces pleat bunching, keeps performance consistent	Reduces downtime, maximises element life
Visual and electrical indicators available	Check element condition at a glance	Optimises element life, prevents bypassing
	Right style for the application	Matches your system electrical connections

Typical Applications

- Drilling rigs
- Power packs
- Oil/gas industry
- Flight simulators
- Test rigs

The Parker Filtration Model 100P High Pressure Filters.

The 100P Series is designed to meet the growing demand for high-pressure filters with a flow rate capacity of up to 1000 l/min at 414 bar working pressure. For systems where reverse flow can be expected, an optional integrated reverse flow valve avoids back wash of contamination. When changing the element, only the end cap of the bowl has to be removed. The filter is ideal for applications where space is at a premium. The filter media used in the elements is high quality Microglass III glass fibre.



Tel: +45 63 12 83 00 | Email: ps@hymatik.com | www.hymatik.com | Hvidkaervej 27a, DK-5250 Odense SV, Denmark

Specification

Pressure ratings:
Maximum allowable operating pressure 414 bar.
Filter housing pressure pulse fatigue tested: $3*10^6$ pulses 0 - 276 bar.

Connections:
Inlet and outlet connections are threaded internally or flange faced.
Threads G1½", G2" (ISO 228/1), SAE 24, SAE 32.
or flanges 1½" SAE 6000, 2" SAE 6000, 1½" SAE 6000-M,
2" SAE 6000-M.
*6000-M is a SAE style with appropriate metric fixing threads.

Filter housing:
Head material cast iron (GSI).
Bowl material extruded steel, max torque 200 Nm.

Seal material:
Nitrile or Fluoroelastomer.

Operating temperature range:
Seal material Nitrile: - 40 °C to +100 °C.
Seal material Fluoroelastomer: - 20 °C to +120 °C.

Bypass valve:
Opening pressure 7.0 bar.

Options:
Reverse flow valve, which directs back flow from port to port.

Filter element:
Degree of filtration:
Determined by Multipass-test according to ISO 16889.

Flow fatigue characteristics:
Filter media is supported so that the optimal fatigue life is achieved (ISO 3724).

Microglass III:
Supported with epoxy coated metal wire mesh, end cap material reinforced composite and metal inner core.
Collapse rating 20 bar (ISO 2941).

Indicator options:
Indicating differential pressure: 5.0 bar.
- visual indicator.
- electrical indicator.

Weights (kg):
100P-1: 37 kg.
100P-2: 47 kg.

Fluid compatibility:
Suitable for use with mineral and vegetable oils, and some
synthetic oils. For other fluids, please consult Parker Filtration.

Installation Details

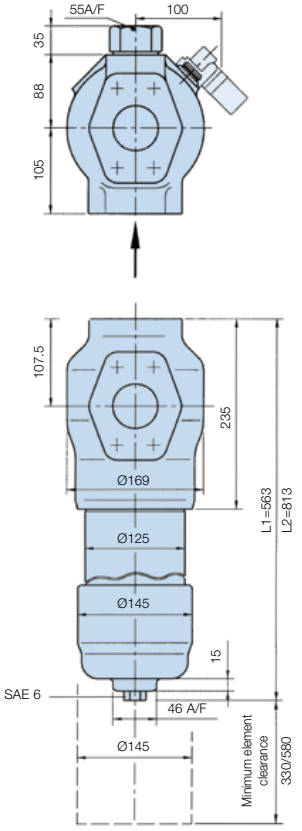

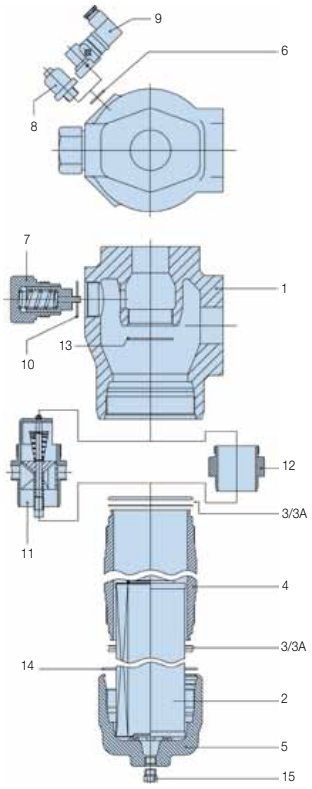

Mounting Clamp Item 16

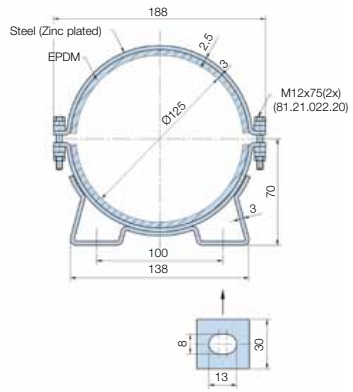

Type H model 1000	
1	Filter head
2	Filter element
3	Bowl seal
3A	Bowl back-up ring
4	Housing
5	Cover
6	Indicator seal
7	Bypass set
8	Visual indicator
9	Electrical indicator
10	Bypass seal
11	Reverse flow set
12	Adaptor
13	Adaptor/reverse flow seal
14	Cover seal
15	Drain plug
16	Mounting clamp

Note: For installation drawings of the SAE 1½" and 2" flanges, contact Parker.

Tel: +45 63 12 83 00 | Email: ps@hymatik.com | www.hymatik.com | Hvidkaervej 27a, DK-5250 Odense SV, Denmark

100P Series
High Pressure Filters

Additional Information

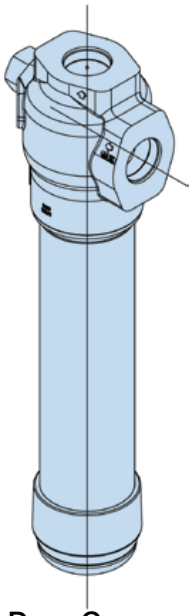

Filter with Reverse Flow Valve

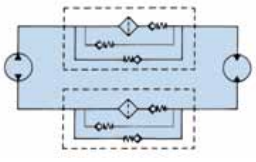

Circuit symbol

Normal Flow Condition

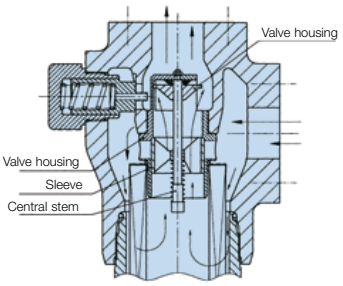

Reverse Flow Condition

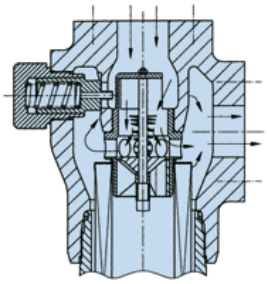

Pressure Drop Curves

The recommended level of the initial pressure drop is max. 2.3 bar.
If the medium used has a viscosity different from 30 cSt, pressure drop can be estimated as follows:
The total Δp = housing Δph + (element Δpe x working viscosity/30).

100P-1 Empty Housing (G1 1/2", SAE 24, SAE 1 1/2")

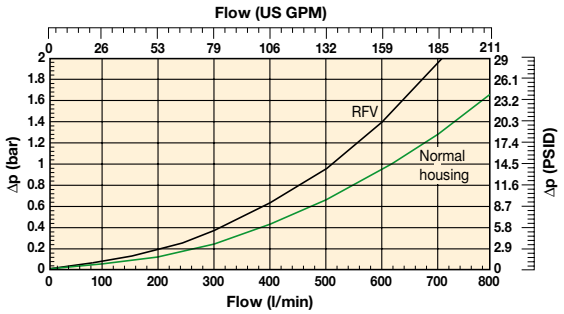

100P-2 Empty Housing (G2", SAE 32, SAE 2")

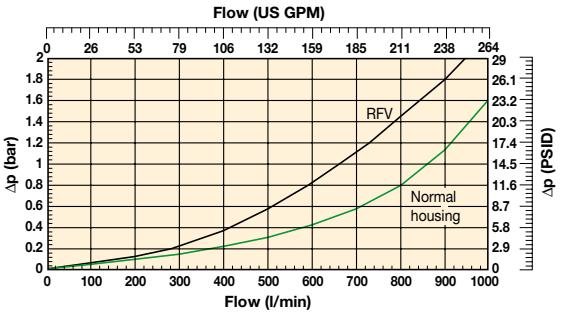

100P-1 Elements

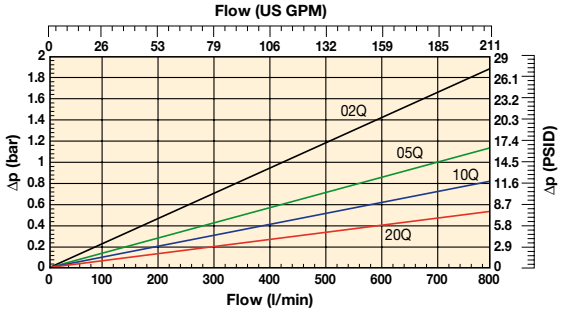

100P-2 Elements

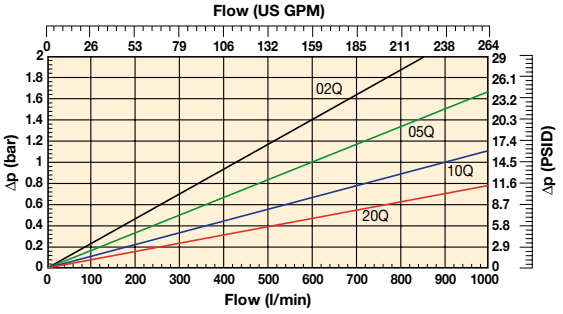

Tel: +45 63 12 83 00 | Email: ps@hymatik.com | www.hymatik.com | Hvidkaervej 27a, DK-5250 Odense SV, Denmark

Ordering Information

Standard products table

Part number	Supersedes	Flow (l/min)	Model number	Element length	Media rating (µ)	Seals	Indicator	Bypass settings	Ports	Replacement elements	Supersedes
100P105QBM4MF241	1074A.2HN70.FZ1210	600	100P	Length 1	5	Nitrile	Visual	7.0 bar	SAE flange 1½" 6000	**939061Q**	1070Z121A
100P110QBM4MF241	1074A.2HN70.FZ1220	700	100P	Length 1	10	Nitrile	Visual	7.0 bar	SAE flange 1½" 6000	**939062Q**	1070Z122A
100P120QBM4MF241	1074A.2HN70.FZ1230	800	100P	Length 1	20	Nitrile	Visual	7.0 bar	SAE flange 1½" 6000	**939063Q**	1070Z123A
100P205QBM4MF321	1074A.2HN70.TZ2210	840	100P	Length 2	5	Nitrile	Visual	7.0 bar	SAE flange 2" 6000	**939065Q**	1070Z221A
100P210QBM4MF321	1074A.2HN70.TZ2220	920	100P	Length 2	10	Nitrile	Visual	7.0 bar	SAE flange 2" 6000	**939066Q**	1070Z222A
100P220QBM4MF321	1074A.2HN70.TZ2230	1000	100P	Length 2	20	Nitrile	Visual	7.0 bar	SAE flange 2" 6000	**939067Q**	1070Z223A

Note: Filter assemblies ordered from the product configurator below are on extended lead times. Where possible, please make your selection from the table above.

Product configurator

Box 1	Box 2	Box 3	Box 4	Box 5	Box 6	Box 7	Box 8
100P	**2**	**10Q**	**B**	**M4**	**M**	**F32**	**1**

Box 1

Code	
Model	**Code**
Large HP filter, L-port	**100P**

Box 2

Filter type	
Length	**Code**
Length 1	**1**
Length 2	**2**

Box 3

Degree of filtration				
Element media	**Glass fibre**			
	Media code			
Microglass III element	**02Q**	**05Q**	**10Q**	**20Q**

Box 4

Seal type	
Seal material	**Code**
Nitrile	**B**
Fluoroelastomer	V

Box 5

Indicator	
	Code
Indicator port plugged	**P**
Visual indicator	**M4**
Electrical indicator	**T2**
Electrical indicator with red lamp 28 Vdc, N.O.	T3
Electrical indicator with red lamp 110 VAC, N.O.	T4
Electrical indicator with red lamp 250 VAC, N.O.	T5

Box 6

Bypass and indicator settings		
Bypass valve	**Indicator**	**Code**
7.0 bar	5.0 bar	**M**

When filter includes a bypass valve but not an indicator, code denotes bypass setting.

Box 7

Filter connection	
Connections	**Code**
Thread G 1½	G24
Thread G 2	G32
Thread SAE 24	S24
Thread SAE 32	S32
SAE flange 1½" 6000	**F24**
SAE flange 1½" 6000-M	on request
SAE flange 2" 6000	**F32**
SAE flange 2" 6000-M	on request

Box 8

Options	
Options	**Code**
Standard	**1**
Reverse flow valve	3
ATEX certified* (Category 2, non-electrical equipment)	EX

Note 1*: For ATEX classified filters add EX after the code. ATEX certified filters with electrical indicator are available on request. Visual indicators are classified as Category 2, non electrical equipment. Filter assemblies with EX code will be supplied with a dedicated name plate. Pls consult Parker Filtration for any questions related to the classification of our products.

Replacement elements with nitrile seals		
Media	Length 1	Length 2
02Q	**939060Q**	**939064Q**
05Q	**939061Q**	**939065Q**
10Q	**939062Q**	**939066Q**
20Q	**939063Q**	**939067Q**

Nominal flow (l/min) at viscosity 30 cSt				
Filter port size	02Q	05Q	10Q	20Q
100P-1, 1½"	540	600	700	800
100P-2, 2"	700	840	920	1000

Seal Kit and Mounting Clamp	
Options	**Code**
Seal kit (nitrile)	8069000070
Seal kit (fluoroelastomer)	8061000013
Mounting Clamp	84.47.265.01

Spare Indicators	
Part Number	**Option**
8060050033	M4
8060070002	T2
8060070007	T3
8060070006	T5

Note: Refer to Box 5 for options explanation.

Highlights Key (Denotes part number availability)

123	Item is standard
123	Item is standard green option
123	Item is semi standard
123	Item is non standard

Degree of filtration						Code
Average filtration beta ratio ß (ISO 16889) / particle size µm [c]						
ßx(c)=2	ßx(c)=10	ßx(c)=75	ßx(c)=100	ßx(c)=200	ßx(c)=1000	
% efficiency, based on the above beta ratio (ßx)						Disposable
50.0%	**90.0%**	**98.7%**	**99.0%**	**99.5%**	**99.9%**	Microglass III
N/A	N/A	N/A	N/A	N/A	4.5	**02Q**
N/A	N/A	4.5	5	6	7	**05Q**
N/A	6	8.5	9	10	12	**10Q**
6	11	17	18	20	22	**20Q**

Note 1: Part numbers featured with bold highlighted codes will ensure a 'standard' product selection.
Note 2: Alternate displayed part number selection will require you to contact Parker Filtration for availability.

Tel: +45 63 12 83 00 | Email: ps@hymatik.com | www.hymatik.com | Hvidkaervej 27a, DK-5250 Odense SV, Denmark

EPF *i*protect®

(Ecological Pressure Filter)

High Pressure Filters
Max 700 l/min - 450 bar



A compact, cost effective pressure filter solution

Designed with the *i*protect® patented filtration technology

The Parker EPF *i*protect® (Ecological High Pressure Filter) is designed to provide high quality filtration of hydraulic systems, providing new possibilities to reduce the cost of ownership by improving their productivity and profitability.

A radical, innovative approach was applied with the design of the EPF *i*protect®, suitable for a flow capacity up to 700 l/min at 450 bar working pressure.

A new patented design of the filter element allows integration of the bypass valve and element core as re-usable parts in the filter bowl. This makes the product fool proof as there is no risk of forgetting to re-install re-usable parts.

With less space being available for filters, Parker has taken on board the requirement to provide more compact solutions. A unique feature is the filter element remains inside the filter bowl when changing the filter element. This can save over 500mm of space envelope in comparison with traditional high pressure filters.



Product Features:

The patented element design guarantees the quality of filtration, which directly impacts the oil cleanliness level as the usage of pirate type after market filters with unknown quality of filter media is excluded. This in-build safety has a direct, positive impact on the productivity and profitability of equipment.

- Guaranteed quality of filtration
- More compact solutions are possible
- Filter element remains in filter bowl during filter service
- Reduce waste of 50%
- No risk of installation mistakes due to a ‘foolproof’ design
- Unique OEM branding opportunities
- Easy to integrate into hydraulic manifold solutions

Features	Advantages	Benefits
Patented filter element	Avoid use of non-genuine parts	Guaranteed quality of filtration
Filter element remains in filter bowl	Less space needed to change/service filter	More compact solutions are possible
		Reduce service time for filter over 40%
Environmentally-friendly design	Reduces environmental waste over 50%	Lower disposal cost
Service-friendly product design	No handling of loose re-usable parts	No risk of making mistakes during change of element
Bypass valve integral part of filter bowl	Easy to integrate in manifold systems	More compact and lower cost of manifold (only one cavity is needed)
	Lower pressure lost across filter	Saving energy, improving system efficiency
Wide range of differential pressure indicators	Continuous feedback of condition filter elements	Optimizing filter element life
		Contributes to scheduled maintenance

Typical Applications

- Mobile working hydraulics
- Mobile drive system
- Pilot line filtration
- Servo controls
- Reverse flow valve applications
- Industrial working hydraulics
- Control systems



Epf *i*protect® applies the latest generation of Microglass III filter media. The patented element design guarantees the quality of filtration.

The Parker EPF *i*protect® series patented bypass valve technology

Bypass settings are available up to 7 bar or completely blocked in conjunction with patented, high strength filter elements. The principle is based on differential pressure measurement across the filter element. During bypass only a part of the mainflow is flowing through the bypass valve.

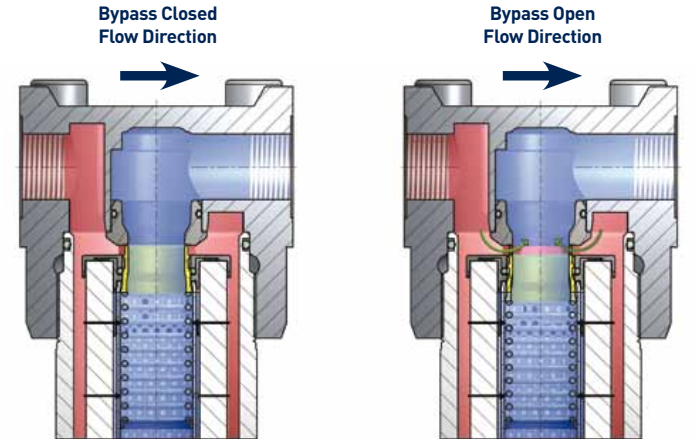

EPF *i*protect®

High Pressure Filters

Selecting the right EPF element



Standard *i*protect® element (code QI)
- 25 bar collapse pressure
- Bypass setting 3.5 / 5 / 7 bar



*i*protect® element with reverse flow valve (code QIR)
- 25 bar collapse pressure
- Bypass setting 3.5 bar





Standard *i*protect® High Strength element (code QIH)
- 210 bar collapse pressure
- Blocked bypass



*i*protect® element with Customer Branding (on request)
- Build your brand
- Protect your after market

EPF Spare Element Information

Type QI

EPF Size1 L1 2 micron	944418Q
EPF Size1 L1 5 micron	944419Q
EPF Size1 L1 10 micron	944420Q
EPF Size1 L1 20 micron	944421Q
EPF Size 2 L1 2 micron	944426Q
EPF Size 2 L1 5 micron	944427Q
EPF Size 2 L1 10 micron	944428Q
EPF Size 2 L1 20 micron	944429Q
EPF Size 2 L2 2 micron	944430Q
EPF Size 2 L2 5 micron	944431Q
EPF Size 2 L2 10 micron	944432Q
EPF Size 2 L2 20 micron	944433Q
EPF Size 3 L1 2 micron	944434Q
EPF Size 3 L1 5 micron	944435Q
EPF Size 3 L1 10 micron	944436Q
EPF Size 3 L1 20 micron	944437Q
EPF Size 3 L2 2 micron	944438Q
EPF Size 3 L2 5 micron	944439Q
EPF Size 3 L2 10 micron	944440Q
EPF Size 3 L2 20 micron	944441Q
EPF Size 4 L1 2 micron	944442Q
EPF Size 4 L1 5 micron	944443Q
EPF Size 4 L1 10 micron	944444Q
EPF Size 4 L1 20 micron	944445Q
EPF Size 4 L2 2 micron	944446Q
EPF Size 4 L2 5 micron	944447Q
EPF Size 4 L2 10 micron	944448Q
EPF Size 4 L2 20 micron	944449Q
EPF Size 5 L1 2 micron	944450Q
EPF Size 5 L1 5 micron	944451Q
EPF Size 5 L1 10 micron	944452Q
EPF Size 5 L1 20 micron	944453Q

Type QIH

EPF High Strength Size1 L1 2 micron	944481Q
EPF High Strength Size1 L1 5 micron	944482Q
EPF High Strength Size1 L1 10 micron	944483Q
EPF High Strength Size1 L1 20 micron	944484Q
EPF High Strength Size 2 L1 2 micron	944489Q
EPF High Strength Size 2 L1 5 micron	944490Q
EPF High Strength Size 2 L1 10 micron	944491Q
EPF High Strength Size 2 L1 20 micron	944492Q
EPF High Strength Size 2 L2 2 micron	944493Q
EPF High Strength Size 2 L2 5 micron	944494Q
EPF High Strength Size 2 L2 10 micron	944495Q
EPF High Strength Size 2 L2 20 micron	944496Q
EPF High Strength Size 3 L1 2 micron	944497Q
EPF High Strength Size 3 L1 5 micron	944498Q
EPF High Strength Size 3 L1 10 micron	944499Q
EPF High Strength Size 3 L1 20 micron	944500Q
EPF High Strength Size 3 L2 2 micron	944501Q
EPF High Strength Size 3 L2 5 micron	944502Q
EPF High Strength Size 3 L2 10 micron	944503Q
EPF High Strength Size 3 L2 20 micron	944504Q
EPF High Strength Size 4 L1 2 micron	944505Q
EPF High Strength Size 4 L1 5 micron	944506Q
EPF High Strength Size 4 L1 10 micron	944507Q
EPF High Strength Size 4 L1 20 micron	944508Q
EPF High Strength Size 4 L2 2 micron	944509Q
EPF High Strength Size 4 L2 5 micron	944510Q
EPF High Strength Size 4 L2 10 micron	944511Q
EPF High Strength Size 4 L2 20 micron	944512Q
EPF High Strength Size 5 L1 2 micron	944513Q
EPF High Strength Size 5 L1 5 micron	944514Q
EPF High Strength Size 5 L1 10 micron	944515Q
EPF High Strength Size 5 L1 20 micron	944516Q

Type QIR

EPF Size1 L1 2 micron reverse flow	944561Q
EPF Size1 L1 5 micron reverse flow	944562Q
EPF Size1 L1 10 micron reverse flow	944563Q
EPF Size1 L1 20 micron reverse flow	944564Q
EPF Size 2 L1 2 micron reverse flow	944569Q
EPF Size 2 L1 5 micron reverse flow	944570Q
EPF Size 2 L1 10 micron reverse flow	944571Q
EPF Size 2 L1 20 micron reverse flow	944572Q
EPF Size 2 L2 2 micron reverse flow	944573Q
EPF Size 2 L2 5 micron reverse flow	944574Q
EPF Size 2 L2 10 micron reverse flow	944575Q
EPF Size 2 L2 20 micron reverse flow	944576Q
EPF Size 3 L1 2 micron reverse flow	944577Q
EPF Size 3 L1 5 micron reverse flow	944578Q
EPF Size 3 L1 10 micron reverse flow	944579Q
EPF Size 3 L1 20 micron reverse flow	944580Q
EPF Size 3 L2 2 micron reverse flow	944581Q
EPF Size 3 L2 5 micron reverse flow	944582Q
EPF Size 3 L2 10 micron reverse flow	944583Q
EPF Size 3 L2 20 micron reverse flow	944584Q
EPF Size 4 L1 2 micron reverse flow	944585Q
EPF Size 4 L1 5 micron reverse flow	944586Q
EPF Size 4 L1 10 micron reverse flow	944587Q
EPF Size 4 L1 20 micron reverse flow	944588Q
EPF Size 4 L2 2 micron reverse flow	944589Q
EPF Size 4 L2 5 micron reverse flow	944590Q
EPF Size 4 L2 10 micron reverse flow	944591Q
EPF Size 4 L2 20 micron reverse flow	944592Q
EPF Size 5 L1 2 micron reverse flow	944593Q
EPF Size 5 L1 5 micron reverse flow	944594Q
EPF Size 5 L1 10 micron reverse flow	944595Q
EPF Size 5 L1 20 micron reverse flow	944596Q

Protecting your system and the environment

Protect your system performance and profit



The new *i*protect® generation of filter elements provide high filtration performance combined with Parker technology. The bespoke design prevents the use of pirate type alternatives.

Less space needed to accommodate the filter



More compact solutions are possible as the filter element remains in the filter bowl during change of filter element. Compared to traditional solutions it does not only save space, it also reduces the required manual handling during the filter change process.

Saving cost and our environment



What does it take to introduce a new ground-breaking design which saves the environment? Parker's EPF *i*protect® applies a re-usable element core and bypass, both integral parts of the filter bowl. This solution avoids the handling of re-usable parts during element change and reduces over 50% disposal weight.

Smart valve technology



Parker hydraulic control valve technology is applied for the reusable bypass valve. This leakage-free valve has a patented interface with the filter element, which ensures that genuine parts are always applied. With bypass settings up to 7 bar filtration during cold start conditions, more compact solutions, can be realised. The valve also optimizes the flow path, reducing the pressure lost across the filter.

Easier to integrate



Parker has set the trend to integrate filtration into manifolds. With Parker's EPF *i*protect® we have taken the design one step further. Only one cavity is needed to accomodate the filter instead of two, this is because the re-usable bypass valve is integrated into the filter bowl, reducing space and cost.

Customized solutions



Parker's motion & control technologies provide new opportunities for our customers. Customized manifolds or duplex filters, as in this example offer complete automatic change-over. The EPF *i*protect® contributes to realizing new solutions, improving your productivity and profitability.

A protective 'gene'

The performance and profitability of systems directly depends upon the filter media.



It goes without saying that Parker's products aim to avoid the use of unknown filter performance, jeopardizing safety and performance. Our Microglass III media is continuously upgraded and acts as a protective 'gene' in the system.

When going into reverse



Parker's EPF can be equipped with an optional reverse flow. This valve assembly is integrated in the element end cap and isolates the filter medium during reverse flow conditions.

A new design of the filter element allows integration of the bypass valve and element core as re-usable parts in the filter bowl. This results in cost reduction when integrating the high pressure filter in manifold type solutions. But it also reduces the waste when changing the filter element by over 50% as the element core is an integral part of the filter bowl.

The design of the EPF *i*protect®, is unique, there is no need to re-install any re-usable parts as with some other filters in the market. This makes the product fool proof as there is no risk of forgetting to re-install re-usable parts.



Replacing the filter element:

- Drain the filter housing using the plugged drain port.
- Thanks to the filter lock the element remains in the bowl.
- Pull out the old element. The re-usable element core and bypass valve are integral parts of the bowl.
- Filtration is from 'Out to In,' the element core is located in the clean oil side.
- Just drop the new element in the bowl.
- Screw the bowl, including element into the filter head.

Tel: +45 63 12 83 00 | Email: ps@hymatik.com | www.hymatik.com | Hvidkaervej 27a, DK-5250 Odense SV, Denmark

EPF *i*protect®

Size 1

Specification EPF *i*protect® Size 1

Specification
Nominal flow 40 l/min

Pressure ratings
Maximum allowable operationg pressure 450 bar
Filter housing pressure pulse fatigue tested
10^6 pulses 0-414 bar

Connections
Inlet and outlet connections are
threaded internally

Connection style
Thread G½
Threat SAE 8

Filter housing
Head material cast iron (GSI)
Bowl material steel

Seal material
Nitrile of Fluorelastomer

Operating temperature range
Seal material Nitrile : -40 °C to +100 °C
Seal material Fluorelastomer : -20 °C to +120 °C

Bypass valve & Indicator settings

Bypass	Indicator
3.5 bar	2.5 bar
5.0 bar	3.5 bar
7.0 bar	5.0 bar
Blocked	5.0 bar

Filter element
Degree of filtration
Determined by multipass test in accordance to ISO16889

Flow fatigue characteristics
Filter media is supported so that the optimal fatigue life is achieved (ISO 3724)

Microglass III
Supported with epoxy coated metal wire mesh, end cap material reinforced composite and reusable metal inner core. Collapse pressure 25 bar (ISO 2941)

High collapse elements
To be used when bypass blocked option is selected Collapse pressure 210 bar (ISO 2941)

Indicator options
Indicating differential pressure:
2.5 +/- 0.3 bar
3.5 +/- 0.3 bar
5.0 +/- 0.3 bar

Visual M3
Electrical T1
Electronic F1 (PNP)
Electronic F2 (NPN)
Atex versions are available on request

Weights (kg)
EPF Size 1: 3

Fluid compatibility

- Hydraulic mineral oils H to class HLPD (DIN51524)
- Operating fluids DIN ISO 2943
- Lubrication fluids ISO6743, APJ, DIN 51517, ACEA, ASTM
- Vegetable oils
- 60/40 Water Glycols
- On request - Industrial grade phosphate esters
- Non aggressive synthetic oils
- Non aggressive bio-degradable oils (HETG, HEPG and HEES to VDMA 24568)

EPF *i*protect® - Size 1 (Inline)

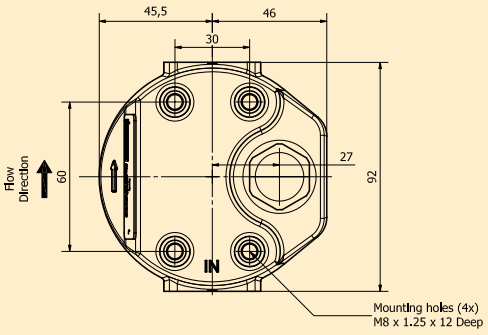

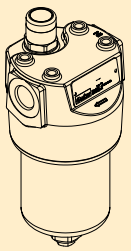

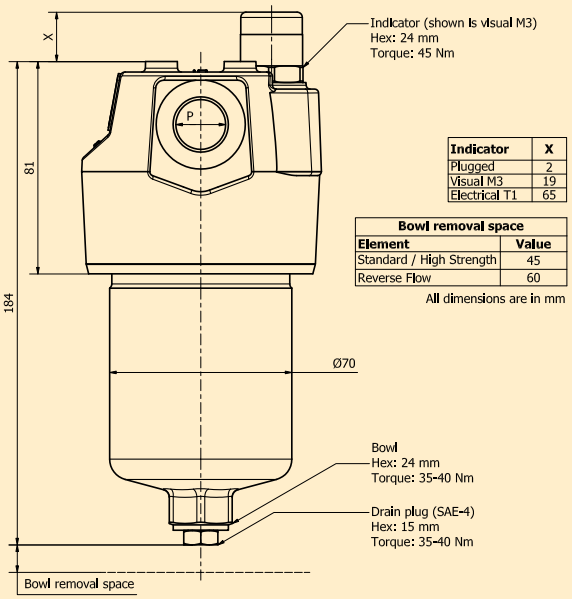

Indicator	X
Plugged	2
Visual M3	19
Electrical T1	65

Bowl removal space	
Element	Value
Standard / High Strength	45
Reverse Flow	60

All dimensions are in mm

Tel: +45 63 12 83 00 | Email: ps@hymatik.com | www.hymatik.com | Hvidkaervej 27a, DK-5250 Odense SV, Denmark

EPF *i*protect® Size 1 Pressure Drop Curves

With 3.5 bar bypass the recommended initial pressure drop max is 1.2 bar
With 7.0 bar bypass the recommended initial pressure drop max is 2.3 bar
If the medium used has a viscosity different from 30cSt. pressure drop over the filter can be estimated as follows:
The total Δp = housing Δph + (element Δpe x working viscosity/30).

EPF Size 1 Empty housing

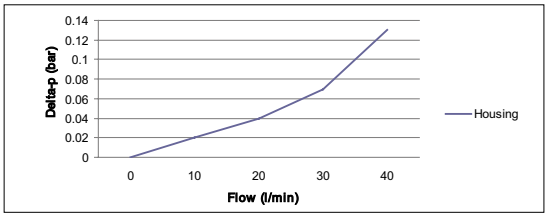

EPF Size 1 Filter Elements

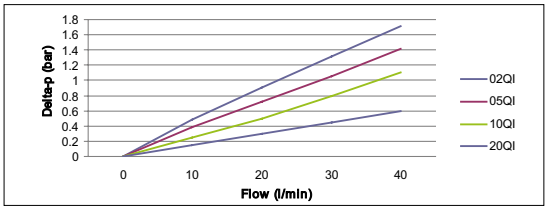

EPF Size 1 Filter Elements with reverse flow valve

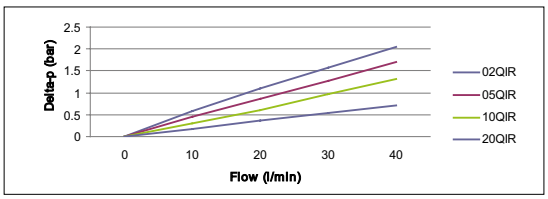

EPF Size 1 High Strength Filter Elements

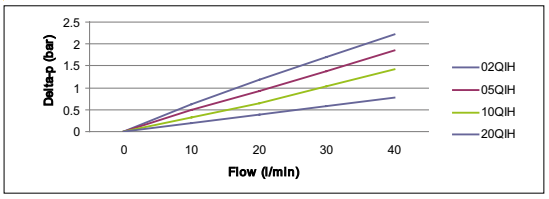

Tel: +45 63 12 83 00 | Email: ps@hymatik.com | www.hymatik.com | Hvidkaervej 27a, DK-5250 Odense SV, Denmark

EPF *i*protect®

Size 2

Specification EPF *i*protect® Size 2

Specification
Nominal flow >100 l/min

Pressure ratings
Maximum allowable operationg pressure 450 bar
Filter housing pressure pulse fatigue tested
10^6 pulses 0-414 bar

Connections
Inlet and outlet connections are
threaded internally

Connection style
Thread G¾
Thread SAE 12
Thread M27, ISO 6149
SAE flange ¾ = 6000M
SAE flange ¾ = 6000
Manifold

Filter housing
Head material cast iron (GSI)
Bowl material steel

Seal material
Nitrile of Fluorelastomer

Operating temperature range
Seal material Nitrile : -40 °C to +100 C
Seal material Fluorelastomer : -20 °C to +120 C

Bypass valve & Indicator settings

Bypass	Indicator
3.5 bar	2.5 bar
5.0 bar	3.5 bar
7.0 bar	5.0 bar
Blocked	5.0 bar

Filter element
Degree of filtration
Determined by multipass test in accordance to ISO16889

Flow fatigue characteristics
Filter media is supported so that the optimal fatigue life is achieved (ISO 3724)

Microglass III
Supported with epoxy coated metal wire mesh, end cap material reinforced composite and reusable metal inner core. Collapse pressure 25 bar (ISO 2941)

High collapse elements
To be used when bypass blocked option is selected
Collapse pressure 210 bar (ISO 2941)

Indicator options
Indicating differential pressure:
2.5 +/- 0.3 bar
3.5 +/- 0.3 bar
5.0 +/- 0.3 bar

Visual M3
Electrical T1
Electronic F1 (PNP)
Electronic F2 (NPN)
Atex versions are available on request

Weights (kg)
EPF Size 2 length 1: 4,2
EPF Size 2 length 2: 5,7

Fluid compatibility
- Hydraulic mineral oils H to class HLPD (DIN51524)
- Operating fluids DIN ISO 2943
- Lubrication fluids ISO6743, APJ, DIN 51517, ACEA, ASTM
- Vegetable oils
- 60/40 Water Glycols
- On request - Industrial grade phosphate esters
- Non aggressive synthetic oils
- Non aggressive bio-degradable oils (HETG, HEPG and HEES to VDMA 24568)

EPF *i*protect® - Size 2 (Inline)

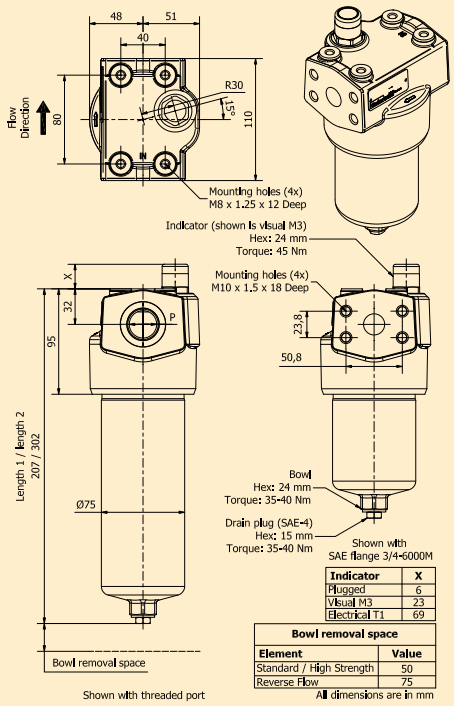

Indicator	X
Plugged	6
Visual M3	23
Electrical T1	69

Bowl removal space	
Element	Value
Standard / High Strength	50
Reverse Flow	75

EPF *i*protect® - Size 2 (Manifold)

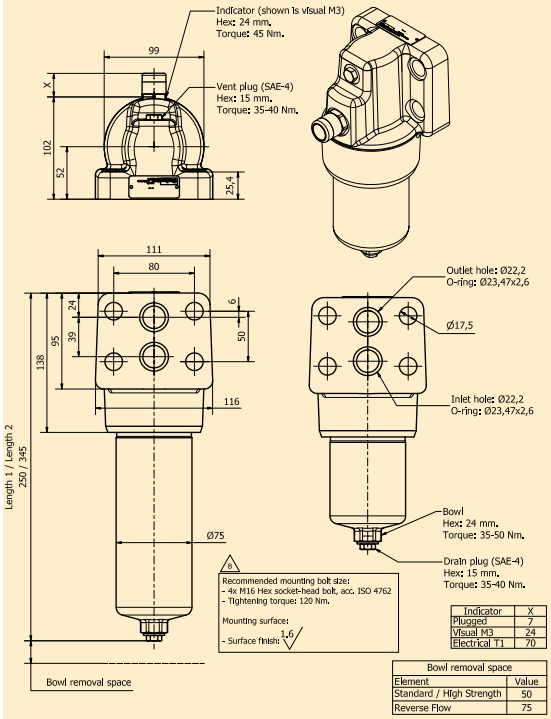

Indicator	X
Plugged	7
Visual M3	24
Electrical T1	70

Bowl removal space	
Element	Value
Standard / High Strength	50
Reverse Flow	75

Parker Hannifin
Hydraulic Filter Division Europe
FDHB500UK/EPF

Tel: +45 63 12 83 00 | Email: ps@hymatik.com | www.hymatik.com | Hvidkaervej 27a, DK-5250 Odense SV, Denmark

EPF *i*protect® Size 2 Pressure Drop Curves

With 3.5 bar bypass the recommended initial pressure drop max is 1.2 bar
With 7.0 bar bypass the recommended initial pressure drop max is 2.3 bar
If the medium used has a viscosity different from 30cSt. pressure drop over the filter can be estimated as follows:
The total Δp = housing Δph + (element Δpe x working viscosity/30).

Empty Housing EPF Size 2

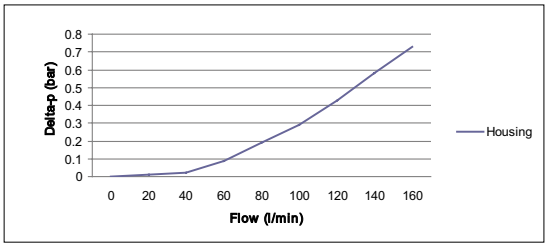

EPF Size 2 Length 1 Filter Elements

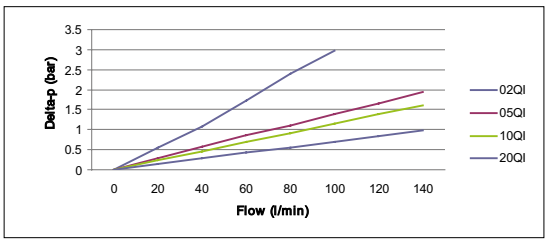

EPF Size 2 Length 2 Filter Elements

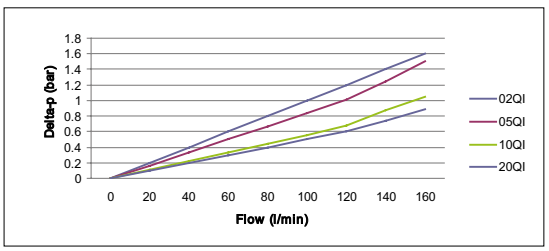

EPF Size 2 Length 1 Filter Elements with reverse flow valve

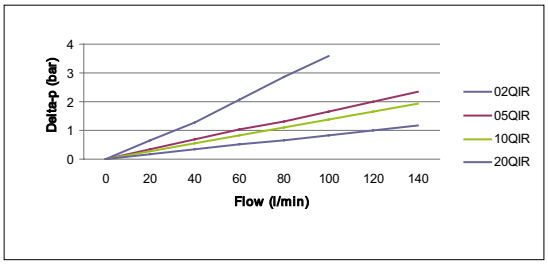

EPF Size 2 Length 2 Filter Elements with reverse flow valve

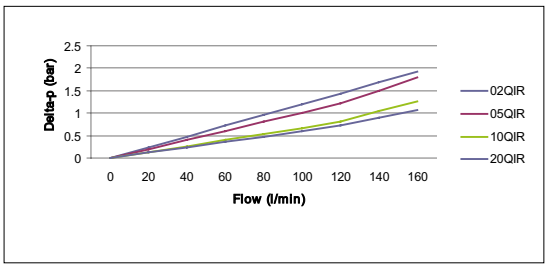

EPF Size 2 Length 1 High Strength Filter Elements

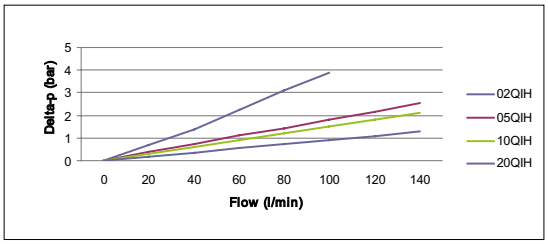

EPF Size 2 Length 2 High Strength Filter Elements

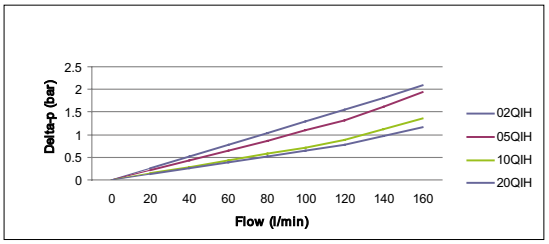

Tel: +45 63 12 83 00 | Email: ps@hymatik.com | www.hymatik.com | Hvidkaervej 27a, DK-5250 Odense SV, Denmark

EPF *i*protect®

Size 3

Specification EPF *i*protect® Size 3

Specification
Nominal flow >160 l/min

Pressure ratings
Maximum allowable operationg pressure 450 bar
Filter housing pressure pulse fatigue tested
10^6 pulses 0-414 bar

Connections
Inlet and outlet connections are
threaded internally

Connection style
Thread G1
Thread SAE 16
Thread M33, ISO 6149
SAE flange 1 = 6000M
SAE flange 1 = 6000

Filter housing
Head material cast iron (GSI)
Bowl material steel

Seal material
Nitrile of Fluorelastomer

Operating temperature range
Seal material Nitrile : -40 °C to +100 °C
Seal material Fluorelastomer : -20 °C to +120 °C

Bypass valve & Indicator settings

Bypass	Indicator
3.5 bar	2.5 bar
5.0 bar	3.5 bar
7.0 bar	5.0 bar
Blocked	5.0 bar

Filter element
Degree of filtration
Determined by multipass test in accordance to ISO16889

Flow fatigue characteristics
Filter media is supported so that the optimal fatigue life is achieved (ISO 3724)

Microglass III
Supported with epoxy coated metal wire mesh, end cap material reinforced composite and reusable metal inner core. Collapse pressure 25 bar (ISO 2941)

High collapse elements
To be used when bypass blocked option is selected
Collapse pressure 210 bar (ISO 2941)

Indicator options
Indicating differential pressure:
2.5 +/- 0.3 bar
3.5 +/- 0.3 bar
5.0 +/- 0.3 bar

Visual M3
Electrical T1
Electronic F1 (PNP)
Electronic F2 (NPN)
Atex versions are available on request

Weights (kg)
EPF Size 3 length 1: 6,7
EPF Size 3 length 2: 9,2

Fluid compatibility
- Hydraulic mineral oils H to class HLPD (DIN51524)
- Operating fluids DIN ISO 2943
- Lubrication fluids ISO6743, APJ, DIN 51517, ACEA, ASTM
- Vegetable oils
- 60/40 Water Glycols
- On request - Industrial grade phosphate esters
- Non aggressive synthetic oils
- Non aggressive bio-degradable oils (HETG, HEPG and HEES to VDMA 24568)

EPF *i*protect® - Size 3 (Inline)

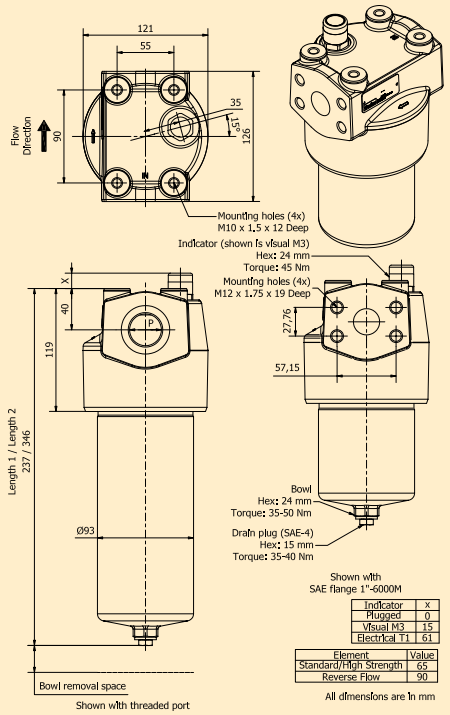

Tel: +45 63 12 83 00 | Email: ps@hymatik.com | www.hymatik.com | Hvidkaervej 27a, DK-5250 Odense SV, Denmark

EPF *i*protect® Size 3 Pressure Drop Curves

With 3.5 bar bypass the recommended initial pressure drop max is 1.2 bar
With 7.0 bar bypass the recommended initial pressure drop max is 2.3 bar
If the medium used has a viscosity different from 30cSt. pressure drop over the filter can be estimated as follows:
The total Δp = housing Δph + (element Δpe x working viscosity/30).

EPF Size 3 Empty Housing

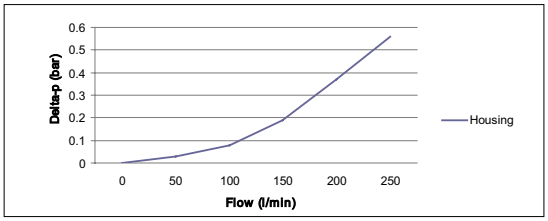

EFP Size 3 Length 1 Filter Elements

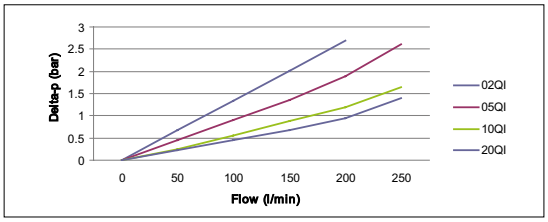

EPF Size 3 Length 2 Filter Elements

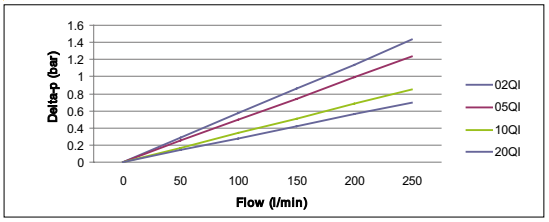

EFP Size 3 Length 1 Filter Elements with reverse flow valve

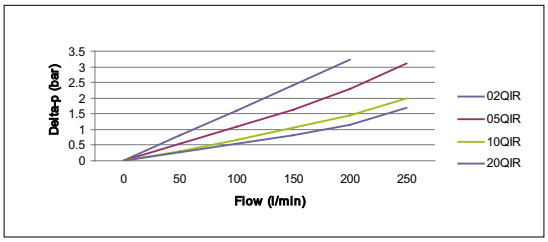

EPF Size 3 Length 2 Filter Elements with reverse flow valve

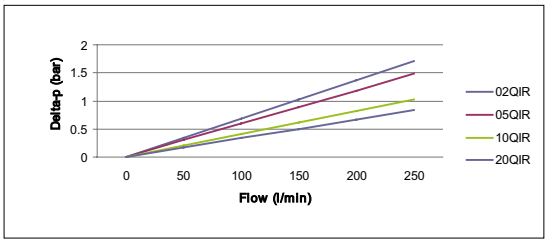

EFP Size 3 Length 1 High Strength Filter Elements

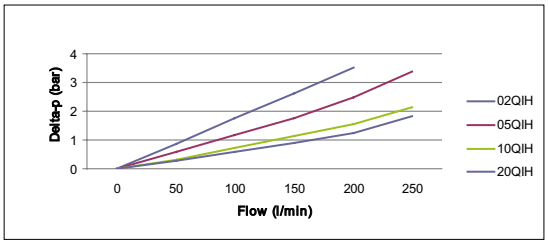

EPF Size 3 Length 2 High Strength Filter Elements

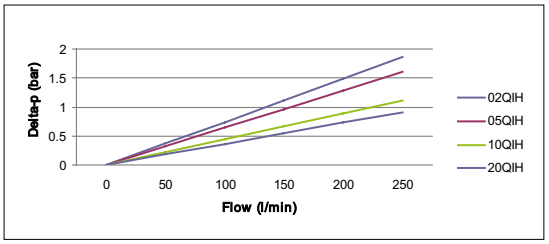

Tel: +45 63 12 83 00 | Email: ps@hymatik.com | www.hymatik.com | Hvidkaervej 27a, DK-5250 Odense SV, Denmark

EPF *i*protect®

Size 4

Specification EPF *i*protect® Size 4

Specification
Nominal flow >320 l/min

Pressure ratings
Maximum allowable operationg pressure 450 bar
Filter housing pressure pulse fatigue tested 10^6 pulses 0-414 bar

Connections
Inlet and outlet connections are threaded internally

Connection style
Thread G11/4
Thread G11/2
Thread SAE 20
Thread SAE 24
Thread M42, ISO 6149
SAE flange 1¼ = 6000M
SAE flange 1¼ = 6000
Manifold

Filter housing
Head material cast iron (GSI)
Bowl material steel
Seal material
Nitrile of Fluorelastomer

Operating temperature range
Seal material Nitrile : -40 °C to +100 °C
Seal material Fluorelastomer : -20 °C to +120 °C

Bypass valve & Indicator settings

Bypass	Indicator
3.5 bar	2.5 bar
5.0 bar	3.5 bar
7.0 bar	5.0 bar
Blocked	7.0 bar

Filter element
Degree of filtration
Determined by multipass test in accordance to ISO16889

Flow fatigue characteristics
Filter media is supported so that the optimal fatigue life is achieved (ISO 3724)

Microglass III
Supported with epoxy coated metal wire mesh, end cap material reinforced composite and reusable metal inner core. Collapse pressure 25 bar (ISO 2941)

High collapse elements
To be used when bypass blocked option is selected
Collapse pressure 210 bar (ISO 2941)

Indicator options
Indicating differential pressure:
2.5 +/- 0.3 bar
3.5 +/- 0.3 bar
5.0 +/- 0.3 bar

Visual M3
Electrical T1
Electronic F1 (PNP)
Electronic F2 (NPN)
Atex versions are available on request

Weights (kg)
EPF Size 4 length 1: 15,8
EPF Size 4 length 2: 20,3

Fluid compatibility
- Hydraulic mineral oils H to class HLPD (DIN51524)
- Operating fluids DIN ISO 2943
- Lubrication fluids ISO6743, APJ, DIN 51517, ACEA, ASTM
- Vegetable oils
- 60/40 Water Glycols
- On request - Industrial grade phosphate esters
- Non aggressive synthetic oils
- Non aggressive bio-degradable oils (HETG, HEPG and HEES to VDMA 24568)

EPF *i*protect® - Size 4 (Inline)

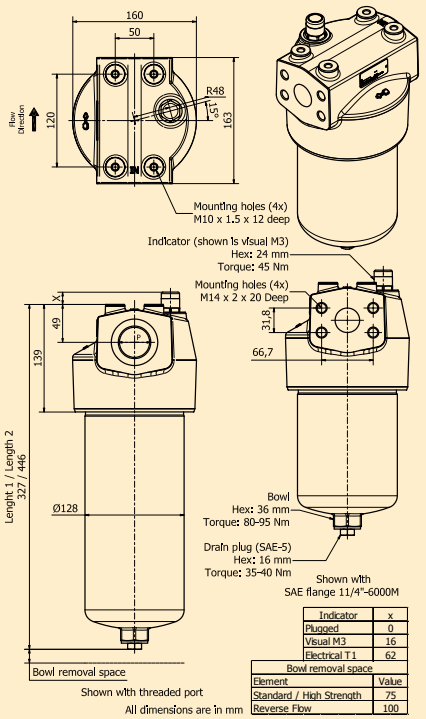

Indicator	x
Plugged	0
Visual M3	16
Electrical T1	62

Bowl removal space	
Element	Value
Standard / High Strength	75
Reverse Flow	100

EPF *i*protect® - Size 4 (Manifold)

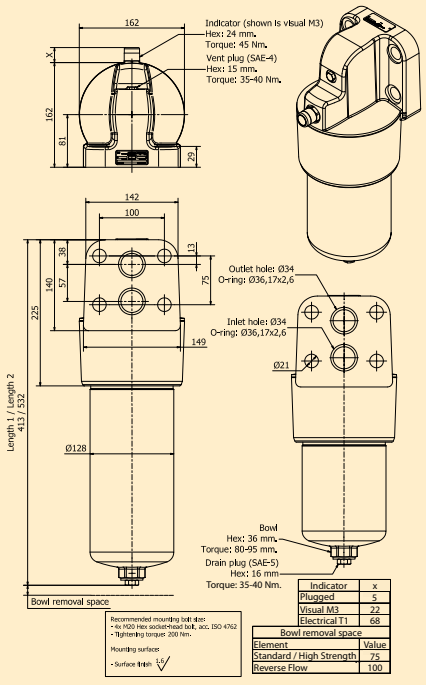

Indicator	x
Plugged	5
Visual M3	22
Electrical T1	68

Bowl removal space	
Element	Value
Standard / High Strength	75
Reverse Flow	100

Parker Hannifin
Hydraulic Filter Division Europe
FDHB500UK/EPF

Tel: +45 63 12 83 00 | Email: ps@hymatik.com | www.hymatik.com | Hvidkaervej 27a, DK-5250 Odense SV, Denmark

EPF *i*protect® Size 4 Pressure Drop Curves

With 3.5 bar bypass the recommended initial pressure drop max is 1.2 bar
With 7.0 bar bypass the recommended initial pressure drop max is 2.3 bar
If the medium used has a viscosity different from 30cSt. pressure drop over the filter can be estimated as follows:
The total Δp = housing Δph + (element Δpe x working viscosity/30).

EPF Size 4 Empty Housing

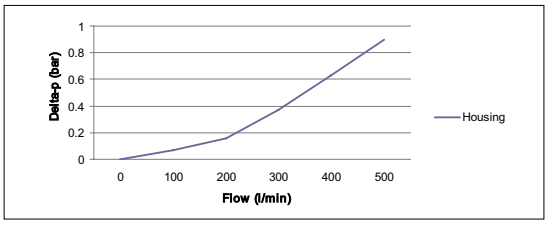

EFP Size 4 Length 1 Filter Elements

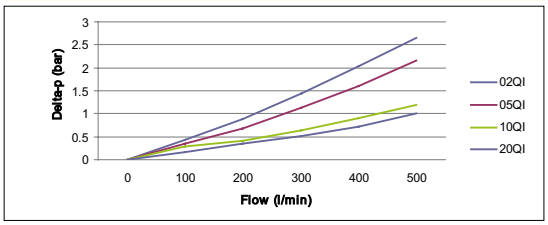

EPF Size 4 Length 2 Filter Elements

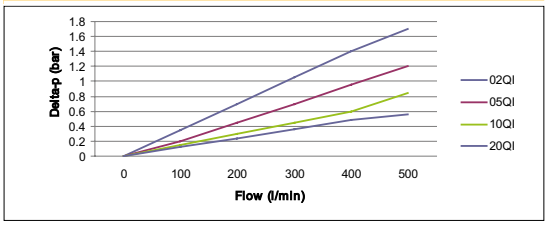

EPF Size 4 Length 1 Filter Elements with reverse flow valve

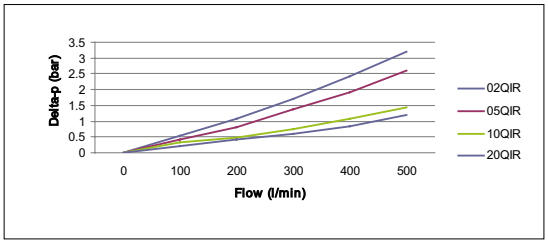

EPF Size 4 Length 2 Filter Elements with reverse flow valve

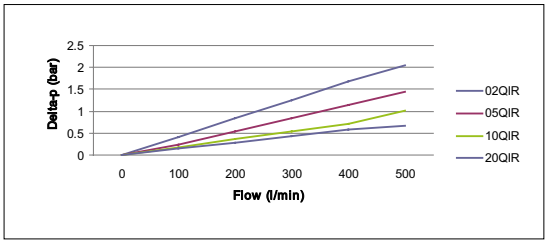

EFP Size 4 Length 1 High Strength Filter Elements

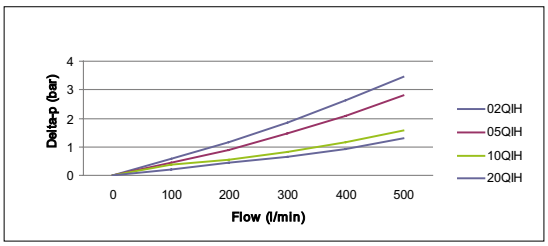

EPF Size 4 Length 2 High Strength Filter Elements

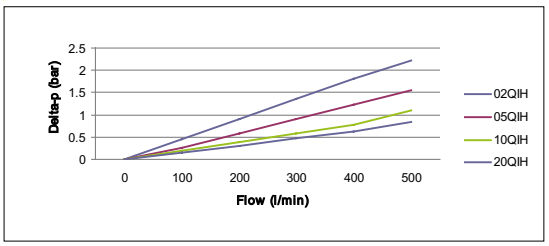

Tel: +45 63 12 83 00 | Email: ps@hymatik.com | www.hymatik.com | Hvidkaervej 27a, DK-5250 Odense SV, Denmark

EPF *i*protect®

Size 5

Specification EPF *i*protect® Size 5

Specification
Nominal flow >320 l/min

Pressure ratings
Maximum allowable operationg pressure 450 bar
Filter housing pressure pulse fatigue tested 10^6 pulses 0-414 bar

Connections
Inlet and outlet connections are threaded internally

Connection style
Thread G1½
Thread SAE 24
Manifold
SAE flange 1½ - 6000M

Filter housing
Head material cast iron (GSI)
Bowl material steel
Seal material
Nitrile of Fluorelastomer

Operating temperature range
Seal material Nitrile : -40 °C to +100 °C
Seal material Fluorelastomer : -20 °C to +120 °C

Bypass valve & Indicator settings

Bypass	Indicator
3.5 bar	2.5 bar
5.0 bar	3.5 bar
7.0 bar	5.0 bar
Blocked	5.0 bar

Filter element
Degree of filtration
Determined by multipass test in accordance to ISO16889

Flow fatigue characteristics
Filter media is supported so that the optimal fatigue life is achieved (ISO 3724)

Microglass III
Supported with epoxy coated metal wire mesh, end cap material reinforced composite and reusable metal inner core. Collapse pressure 25 bar (ISO 2941)

High collapse elements
To be used when bypass blocked option is selected
Collapse pressure 210 bar (ISO 2941)

Indicator options
Indicating differential pressure:
2.5 +/- 0.3 bar
3.5 +/- 0.3 bar
5.0 +/- 0.3 bar

Visual M3
Electrical T1
Electronic F1 (PNP)
Electronic F2 (NPN)
Atex versions are available on request

Weights (kg)
EPF Size 5 length 1: 31

Fluid compatibility
- Hydraulic mineral oils H to class HLPD (DIN51524)
- Operating fluids DIN ISO 2943
- Lubrication fluids ISO6743, APJ, DIN 51517, ACEA, ASTM
- Vegetable oils
- 60/40 Water Glycols
- On request - Industrial grade phosphate esters
- Non aggressive synthetic oils
- Non aggressive bio-degradable oils (HETG, HEPG and HEES to VDMA 24568)

EPF *i*protect® - Size 5 (Inline)

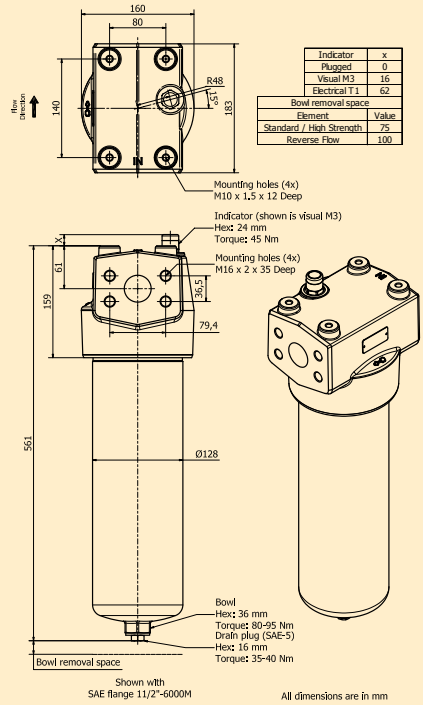

Indicator	x
Plugged	0
Visual M3	16
Electrical T1	62

Bowl removal space	
Element	Value
Standard / High Strength	75
Reverse Flow	100

EPF *i*protect® - Size (Manifold)

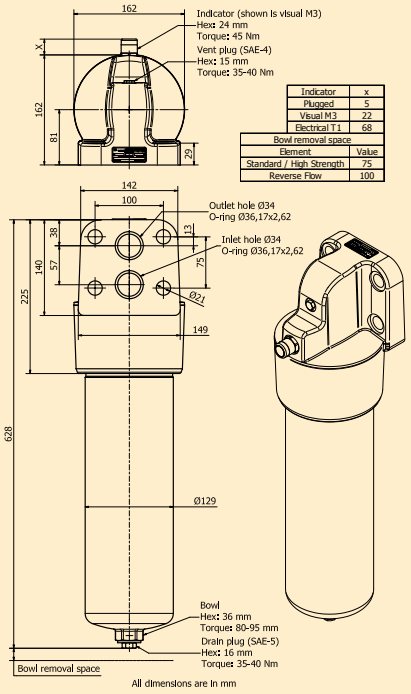

Indicator	x
Plugged	5
Visual M3	22
Electrical T1	68

Bowl removal space	
Element	Value
Standard / High Strength	75
Reverse Flow	100

Parker Hannifin
Hydraulic Filter Division Europe
FDHB500UK/EPF

Tel: +45 63 12 83 00 | Email: ps@hymatik.com | www.hymatik.com | Hvidkaervej 27a, DK-5250 Odense SV, Denmark

EPF *i*protect® Size 5 Pressure Drop Curves

With 3.5 bar bypass the recommended initial pressure drop max is 1.2 bar
With 7.0 bar bypass the recommended initial pressure drop max is 2.3 bar
If the medium used has a viscosity different from 30cSt. pressure drop over the filter can be estimated as follows:
The total Δp = housing Δph + (element Δpe x working viscosity/30).

EPF Size 5 Empty Housing

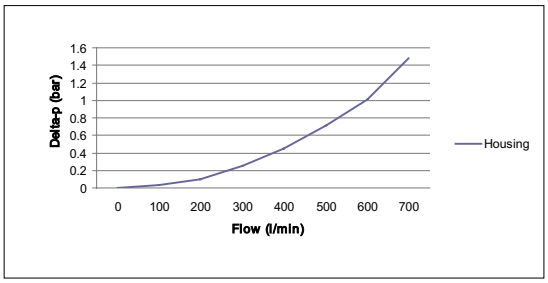

EPF Size 5 Length 1 Filter Elements

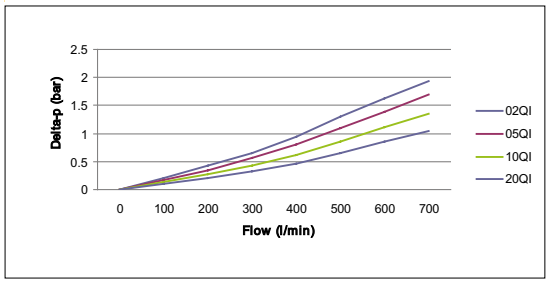

EPF Size 5 Length 1 Filter Elements with reverse flow valve

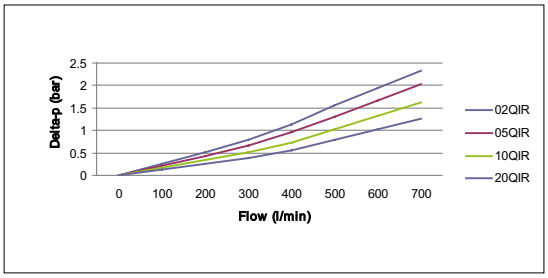

EPF Size 5 Length 1 Filter Elements

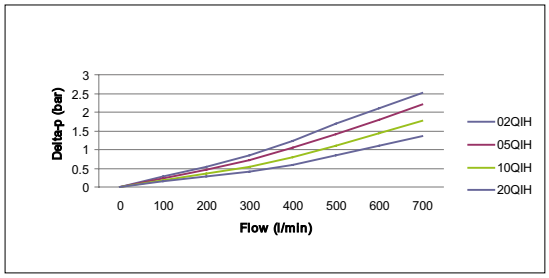

Parts list

Index	Description	Part number
1	Indicator	On Request
2	Plug	On Request
3	Filter head	On Request
4	Filter element	See element table
5	Back-up ring	In seal kit/spare filter elements
6	O-ring	In seal kit/ spare filter elements
7	Filter bowl	On Request
8	Drain plug	On Request

Seal kit numbers

Filter	Nitrile	Fluorelastomer
EPF 1	EPFSK001	EPFSK011
EPF 2	EPFSK002	EPFSK012
EPF 3	EPFSK003	EPFSK013
EPF 4 + 5	EPFSK004	EPFSK014

Exploded view
spare parts drawing

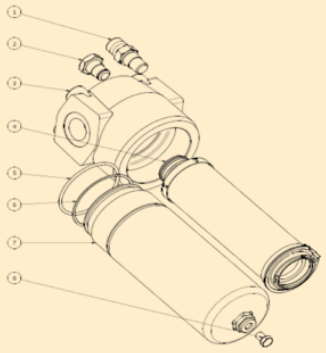

See opposite for parts list
and seal kit numbers

Indicator Options

FMU Δp-Indicators and Pressure Indicators

FMUT Electrical

Rated voltage	Non-inductive load (A)				Inductive load (A)				Inrush current (A)	
	Resistive load		Lamp load		Inductive load		Motor load			
	N.C.	N.O.	N.C.	N.O.	N.C.	N.O.	N.C.	N.O.	N.C.	N.O.
125VAC	5		1.5	0.7	3		2.5	1.3	20 max.	10 max.
250VAC	3		1.0	0.5	2		1.5	0.8		
8VDC	5		2		5	4	3			
14VDC	5		2		4	4	3			
30VDC	4		2		3	3	3			
125VDC	0.4		0.05		0.4	0.4	0.05			
250VDC	0.2		0.03		0.2	0.2	0.03			

Enclosure class	IP65
Electrical connector	DIN 43650
Overvoltage category	II (EN61010-1)

Contact configuration
Electrical Indicator Type T1

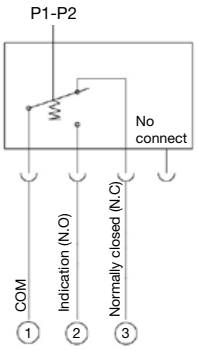

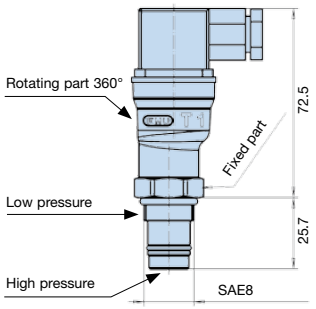

FMUM3 Visual Auto Reset Operation

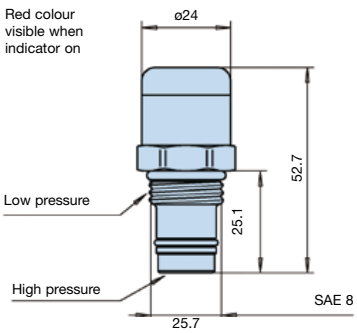

FMUF Electronic

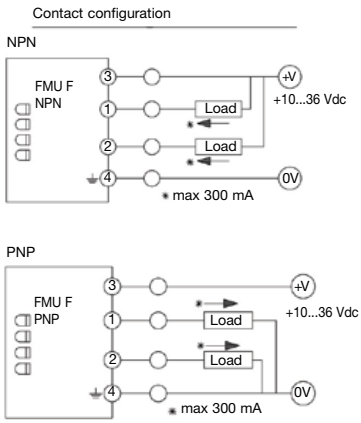

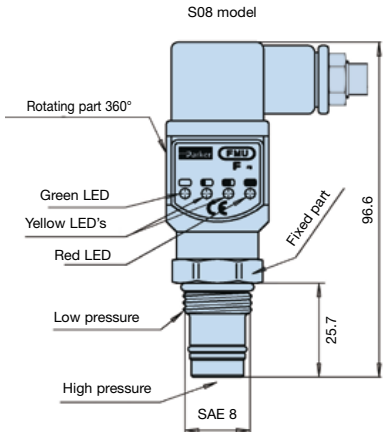

Thermal lock-out (standard setting +20 °C)

- Indicator operates only when temperature is above setting.

Ind. press. setting	LED status				Output	
	G	Y1	Y2	R		
< 50 %	⊗				-	
50 %	⊗	⊗			-	
75 %	⊗	⊗	⊗		2	active
100 %	⊗	⊗	⊗	⊗	1	active

Enclosure class	IP65
Electrical connector	DIN 43650, cable connection PG9 or optinally M12 4-pin
Input supply voltage	+10 to 36 Vdc
*Indication output	max. 300 mA/36 Vdc
Output type:	N.O. or N.C./NPN or PNP

Note: Do not connect output terminals 1 or 2 directly (without load) to power supply terminals, because this will damage the equipment.

Filter media efficiency

Degree of filtration						Code		
Average filtration beta ratio ß (ISO 16889) / particle size µm [c]								
ßx(c)=2	ßx(c)=10	ßx(c)=75	ßx(c)=100	ßx(c)=200	ßx(c)=1000			
% efficiency, based on the above beta ration (ßx)						Disposable Microglass III	Element with reverse flow valve	High strength Element
50.0%	90.0%	98.7%	99.0%	99.5%	99.9%			
N/A	N/A	N/A	N/A	N/A	4.5	**02QI**	**02QIR**	**02QIH**
N/A	N/A	4.5	5	6	7	**05QI**	**05QIR**	**05QIH**
N/A	6	8.5	9	10	12	**10QI**	**10QIR**	**10QIH**
6	11	17	18	20	22	**20QI**	**20QIR**	**20QIH**

Ordering information. Standard part numbers

Filter Assemblies	Part Number	Flow (l/min)	Model Number	Element length	Media Rating (micron)	Seals	Indicator	Bypass (bar)	Ports	Replacement elements
	EPF1105QIBPMG081	40	EFP1	1	5	Nitrile	Plugged port	7	G1/2"	944419Q
	EPF1110QIBPMG081	40	EFP1	1	10	Nitrile	Plugged port	7	G1/2"	944420Q
	EPF1120QIBPMG081	40	EFP1	1	20	Nitrile	Plugged port	7	G1/2"	944421Q
	EPF2205QIBPMG121	140	EPF2	2	5	Nitrile	Plugged port	7	G3/4"	944431Q
	EPF2210QIBPMG121	140	EPF2	2	10	Nitrile	Plugged port	7	G3/4"	944432Q
	EPF2220QIBPMG121	140	EPF2	2	20	Nitrile	Plugged port	7	G3/4"	944433Q
	EPF3205QIBPMG161	250	EPF3	2	5	Nitrile	Plugged port	7	G1"	944439Q
	EPF3210QIBPMG161	250	EPF3	2	10	Nitrile	Plugged port	7	G1"	944440Q
	EPF3220QIBPMG161	250	EPF3	2	20	Nitrile	Plugged port	7	G1"	944441Q
	EPF4205QIBPMG201	450	EPF4	2	5	Nitrile	Plugged port	7	G11/4"	944447Q
	EPF4210QIBPMG201	450	EPF4	2	10	Nitrile	Plugged port	7	G11/4"	944448Q
	EPF4220QIBPMG201	450	EPF4	2	20	Nitrile	Plugged port	7	G11/4"	944449Q
	EPF5105QIBPMG241	500	EPF5	1	5	Nitrile	Plugged port	7	G11/2"	944451Q
	EPF5110QIBPMG241	500	EPF5	1	10	Nitrile	Plugged port	7	G11/2"	944452Q
	EPF5120QIBPMG241	500	EPF5	1	20	Nitrile	Plugged port	7	G11/2"	944453Q

Visual Indicators	Part Number	Setting (bar)
	FMUM3MVMS08	5

For spare element see page 130.

Electrical Indicators	Part Number	Setting (bar)	Switch Type	Additional
	FMUT1MVMS08	5	NO/NC	
	FMUF1MVMS08	5	NO	Electronic 4 LED, PNP
	FMUF2MVMS08	5	NO	Electronic 4 LED, NPN
	FMUF3MVMS08	5	NC	Electronic 4 LED, PNP
	FMUF4MVMS08	5	NC	Electronic 4 LED, NPN

EPF *i*protect®

High Pressure Filter

Ordering Information

Box 1	Box 2	Box 3	Box 4	Box 5	Box 6	Box 7	Box 8
EPF3	2	02QI	B	P	M	G16	1

Box 1

Capacity	
Model	Code
Size 1 (40 l/min)	EPF1
Size 2 (replaces 18P)	EPF2
Size 3 (replaces 28P)	EPF3
Size 4 (replaces 38P)	EPF4
Size 5	EPF5

Box 2

Filter Length	
	Code
Length 1	1
Length 2 (not for Size 1 and Size 5)	2

Highlights Key (Denotes part number availability)

123	Item is standard
123	Item is standard green option
123	Item is semi standard
123	Item is non standard

Box 3

Degree of filtration				
	Media code			
*i*protect® Glassfibre element	02QI	05QI	10QI	20QI
*i*protect® with reverse flow valve(*)	02QIR	05QIR	10QIR	20QIR
*i*protect® High Strength element	02QIH	05QIH	10QIH	20QIH

(*Note: Only in combination with 3.5 bar bypass)

Box 4

Seal Material	
	Code
Nitrile	B
Fluorelastomer	V

Box 5

Indicator	
	Code
Visual Indicator	M3
Electrical Indicator	T1
Electronic 4 LED, PNP, NO	F1
Electronic 4 LED, NPN, NO	F2
Electronic 4 LED, PNP, NC	F3
Electronic 4 LED, NPN, NC	F4
Plugged with Steel plug	P
No indicator port	N

Other versions like ATEX on request
All electrical indicators are CE-certified

Box 6

Bypass Setting		
	Indicator Setting	Code
3.5 bar	2.5 bar	K
5.0 bar	3.5 bar	L
7.0 bar	5.0 bar	M
No bypass	5.0 bar	M
No bypass	No indicator	X

Important notes: When no bypass is selected Parker strongly advices the use of high strength elements

Box 7

Filter Connection		
	Connection type & size	Code
Size 1	Thread G½	G08
	Thread SAE 8	S08
Size 2	Thread G½	G08
	Thread G¾	G12
	Thread SAE 12	S12
	Thread M27, ISO 6149	M27
	SAE flange ¾ - 6000M	H12
	SAE flange ¾ - 6000	F12
	Manifold	X12
Size 3	Thread G1	G16
	Thread SAE 16	S16
	Thread M33, ISO 6149	M33
	SAE flange 1 - 6000M	H16
	SAE flange 1 - 6000	F16
Size 4	Thread G1¼	G20
	Thread G1½	G24
	Thread SAE20	S20
	Thread SAE24	S24
	Thread M42, ISO 6149	M42
	SAE flange 1¼ - 6000M	H20
	SAE flange 1¼ - 6000	F20
	Manifold	X20
Size 5	Thread G1½	G24
	Thread SAE 24	S24
	SAE flange 1½ - 6000M	H24
	Manifold	X20

Box 8

Options		
		Code
Standard		1
No bypass		2
Reverse flow valve	Safeguard valve only in combination with 3.5 bar bypass	RFV
ATEX certified* (Cetegory 2, non-electrical equipment)		EX

Note 1: For non-bypass please select High strength element type QIH
Note 2*: For ATEX classified filters add EX after the code. ATEX certified filters with electrical indicator are available on request. Visual indicators are classified as Category 2, non electrical equipment. Filter assemblies with EX code will be supplied with a dedicated name plate.
Pls consult Parker Filtration for any questions related to the classification of our products.

Tel: +45 63 12 83 00 | Email: ps@hymatik.com | www.hymatik.com | Hvidkaervej 27a, DK-5250 Odense SV, Denmark

EAPF iprotect®

(Ecological ATEX Pressure Filter)

High Pressure Stainless Steel Filters
Max 120 l/min - 690 bar



Safety is a process that never stops

Designed with the iprotect® patented filtration technology

The Parker EAPF iprotect® is designed to provide high quality filtration of hydraulic systems, providing new possibilities reduce the cost of ownership by improving their productivity and profitability.

Meeting the stringent demands of the Marine, Oil & Gas and process equipment markets, the EAPF iprotect® covers a range up to 120 l/min at 690 bar working pressure.

A radical, innovative approach was applied, utilising a new patented design of the filter element providing a high level of embedded safety. Thanks to the patented product design, a service-friendly product has resulted which avoids the use of pirate-type spare parts with unknown quality of filtration. The iprotect® product applies a re-usable element core which can be combined with a bypass valve, reducing the environmental impact over 50% typically.

The EAPF applies twin seal technology. One seal ensures that seawater and contamination cannot ingress the threaded connection between the filter head and bowl. A special hole pattern is applied in the bowl for decompression of the threaded area, this ensures maximum sealing performance of the main seal.

Combined with the flexibility of various connection types (NPT, BSP, Autoclave) and optional versions with integrated check valves to handle system back flushing, the modular EAPF range provides effective integration of high pressure filter solutions in hydraulic systems.



Product Features:

The patented element design guarantees the quality of filtration, which directly impacts the oil cleanliness level as the usage of pirate-type after market filters with unknown quality of filtration is excluded. This in-build safety has a direct, positive impact on the safety, productivity and profitability of equipment.

- Duplex stainless steel housing
- 690 bar rated filter housing
- Twin Seal concept for maximum protection and seal performance
- iprotect® patented filter element
- Wide range of fibreglass and stainless steel mesh filter media
- Optional versions for back-flush systems
- ATEX certified filter housing and indicators
- Coated filter housing to prevent grating of threaded connections

Features	Advantages	Benefits
Patented filter element	Avoid use of non-genuine parts	Guaranteed quality of filtration
Service element remains in filter bowl	Less space needed to change/service the filter	More compact solutions are possible
Environmentally-friendly design	Reduces environmental waste over 50%	Lower disposal cost
Service-friendly product design	No handling of loose re-usable parts	No risk of making mistakes while servicing the filter
Twin-Seal technology	Improved sealing of filter housing parts	Lower risk of leakage
		No corrosion of threaded connection filter head and bowl
Wide range of indicators	Continuous feedback of condition filter elements	Optimising filter element life time
		Contributes to scheduled maintenance
Coated filter housing	Prevents grating of threaded filter head and bowl	Long life time of filter housing

Typical Applications

- Drilling equipment
- Lifting equipment
- Sub sea systems
- Deck equipment
- Flushing rigs
- Chemical injection



The Parker EAPF *i*protect® series patented bypass valve technology

Bypass settings are available up to 7 bar or completely blocked in conjunction with patented, high strength filter elements. The principle is based on differential pressure measurement across the filter element. During bypass only a part of the main flow is flowing through the bypass valve.

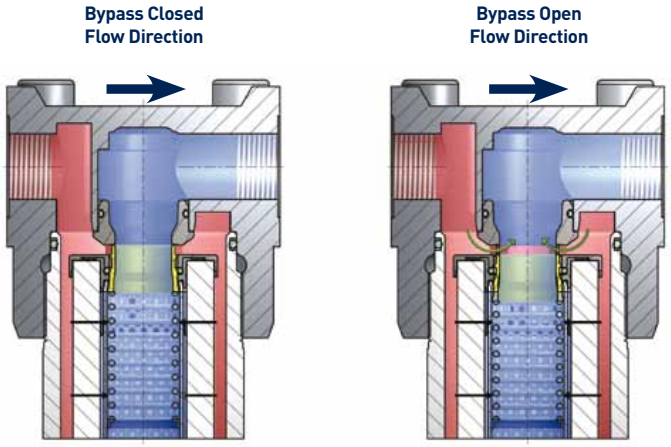

EAPF *i*protect®

High Pressure Stainless Steel Filters

Selecting the right EAPF element



Standard *i*protect® element (code QI)
- 25 bar collapse pressure
- Bypass setting 3.5/5/7 bar



*i*protect® element with reverse flow valve (code QIR)
- 25 bar collapse pressure
- Bypass setting 3.5 bar





Standard *i*protect® High Strength element (code QIH)
- 210 bar collapse pressure
- Blocked bypass



*i*protect® element with Customer Branding (on request)
- Build your brand
- Protect your after market

EAPF Spare Element Information

Type QI

EAPF Size 1 L1 2 micron	944418Q
EAPF Size 1 L1 5 micron	944419Q
EAPF Size 1 L1 10 micron	944420Q
EAPF Size 1 L1 20 micron	944421Q
EAPF Size 1 L2 2 micron	944422Q
EAPF Size 1 L2 5 micron	944423Q
EAPF Size 1 L2 10 micron	944424Q
EAPF Size 1 L2 20 micron	944425Q

Type QIH

EAPF Size 1 L1 2 micron	944481Q
EAPF Size 1 L1 5 micron	944482Q
EAPF Size 1 L1 10 micron	944483Q
EAPF Size 1 L1 20 micron	944484Q
EAPF Size 1 L2 2 micron	944485Q
EAPF Size 1 L2 5 micron	944486Q
EAPF Size 1 L2 10 micron	944487Q
EAPF Size 1 L2 20 micron	944488Q

Type QIR

EAPF Size 1 L1 2 micron	944561Q
EAPF Size 1 L1 5 micron	944562Q
EAPF Size 1 L1 10 micron	944563Q
EAPF Size 1 L1 20 micron	944564Q
EAPF Size 1 L2 2 micron	944565Q
EAPF Size 1 L2 5 micron	944566Q
EAPF Size 1 L2 10 micron	944567Q
EAPF Size 1 L2 20 micron	944568Q

Protecting your system and the environment

Protect your system performance and profit



The new *i*protect® generation of filter elements provide high filtration performance combined with patented technology. The bespoke design prevents the use of pirate type alternatives.

Less space needed to accommodate the filter



More compact solutions are possible as the filter element remains in the filter bowl during change of filter element. Compared to traditional solutions it does not only save space, it also reduces the required manual handling during the filter change process.

Saving cost and our environment



What does it take to introduce a new ground-breaking design which saves the environment? Parker's EAPF *i*protect® applies a re-usable element core and bypass, both integral parts of the filter bowl. This solution avoids the handling of re-usable parts during element change and reduces over 50% disposal weight.

Smart valve technology



Parker hydraulic control valve technology is applied for the reusable bypass valve. This leakage-free valve has a patented interface with the filter element, which ensures that genuine parts are always applied. With bypass settings up to 7 bar filtration during cold start conditions, more compact solutions, can be realised. The valve also optimises the flow path, reducing the pressure lost across the filter.

Easier to integrate



Parker has set the trend to integrate filtration into manifolds. With Parker's EAPF *i*protect® we have taken the design one step further. Only one cavity is needed to accommodate the filter instead of two, this is because the re-usable bypass valve is integrated into the filter bowl, reducing space and cost.

Customised solutions



Parker's motion & control technologies provide new opportunities for our customers. Customised manifolds or duplex filters, as in this example offer complete automatic change-over. The EAPF *i*protect® contributes to realizing new solutions, improving your productivity and profitability.

A protective 'gene'

The performance and profitability of systems directly depends upon the filter media.



It goes without saying that Parker's patented products aim to avoid the use of unknown filter performance, jeopardising safety and performance. Our III media is continuously upgraded and acts as a protective 'gene' in the system.

When going into reverse



Parker's EAPF can be equipped with an optional reverse flow. This valve assembly is integrated in the element end cap and isolates the filter medium during reverse flow conditions.

A new patented design of the filter element allows integration of the bypass valve and element core as re-usable parts in the filter bowl. This results in cost reduction when integrating the high pressure filter in manifold type solutions. But it also reduces the waste when changing the filter element by over 50% as the element core is an integral part of the filter bowl.

The design of the EAPF *i*protect®, is unique, there is no need to re-install any re-usable parts as with some other filters in the market. This makes the product fool proof as there is no risk of forgetting to re-install re-usable parts.



Replacing the filter element:

- Drain the filter housing using the plugged drain port.
- Thanks to the filter lock the element remains in the bowl.
- Pull out the old element. The re-usable element core and bypass valve are integral parts of the bowl.
- Filtration is from 'Out to In,' the element core is located in the clean oil side.
- Just drop the new element in the bowl.
- Screw the bowl, including element into the filter head.

EAPF *i*protect®

Size 1

Specification EAPF *i*protect® Size 1

Specification
Nominal flow 120 l/min

Pressure ratings
Maximum allowable operationg pressure 690 bar
Filter housing pressure pulse fatigue tested 10^6 pulses 0-690 bar

Connections
Inlet and outlet connections are threaded internally

Connection style
1/2" and 3/4" NPT
Autoclave type connection
1/2" and 3/4" BSP

Filter housing
Head material Duplex Stainless Steel
Bowl material Duplex Stainless Steel

Seal material
Nitrile of Fluorelastomer

Operating temperature range
Seal material Nitrile : -40C to +100 C
Seal material Fluorelastomer : -20C to +120 C

Bypass valve & Indicator settings

Bypass	Indicator
3.5 bar	2.5 bar
5.0 bar	4.0 bar
7.0 bar	5.0 bar
Blocked	7.0 bar

Filter element
Degree of filtration
Determined by multipass test in accordance to ISO16889

Flow fatigue characteristics
Filter media is supported so that the optimal fatigue life is achieved (ISO 3724)

Microglass III
Supported with epoxy coated metal wire mesh, end cap material reinforced composite and reusable metal inner core. Collapse pressure 25 bar (ISO 2941)

High collapse elements
To be used when bypass blocked option is selected
Collapse pressure 210 bar (ISO 2941)

Indicator options
Indicating differential pressure:
2.5 +/- 0.3 bar
5.0 +/- 0.3 bar
7.0 +/- 0.3 bar

Visual M3
Electrical T1
Electronic F1 (PNP)
Electronic F2 (NPN)
Atex versions are available on request

Weights (kg)
EPF Size 1 length 1: 13
EPF Size 1 length 2: 17

EAPF *i*protect® - Size 1 (Inline)

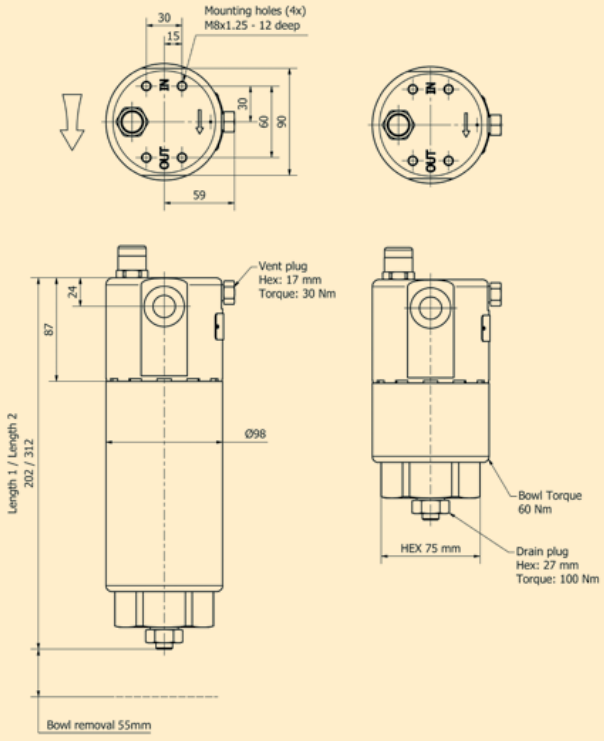

Parker Hannifin
Hydraulic Filter Division Europe
FDHB500UK/EAPF

EAPF *i*protect® Size 1 Pressure Drop Curves

With 3.5 bar bypass the recommended initial pressure drop max is 1.2 bar
With 7.0 bar bypass the recommended initial pressure drop max is 2.3 bar
If the medium used has a viscosity different from 30cSt. pressure drop over the filter can be estimated as follows:
The total Δp = housing Δph + (element Δpe x working viscosity/30).

EAPF Size 1 Empty Housing

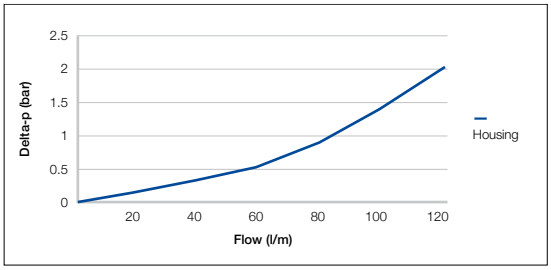

EAPF Size 1 Length Filter Elements

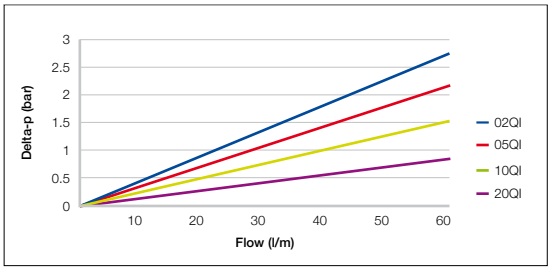

EAPF Size 1 Length 2 Filter Elements

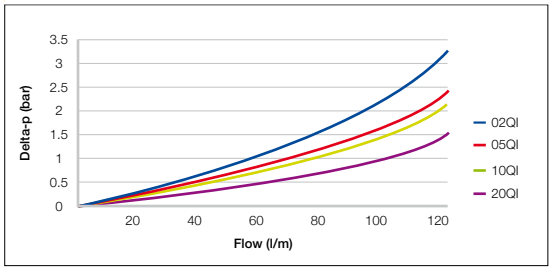

EAPF Size 1 Length 1 High Strength Filter Elements

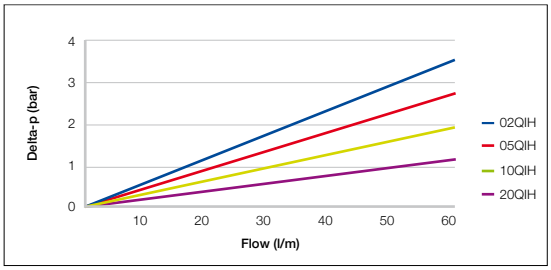

EAPF Size 1 Length 2 High Strength Filter Elements

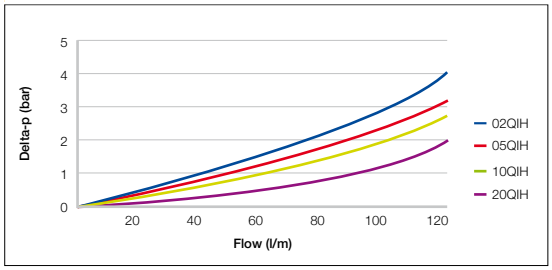

EAPF Size 1 Length 1 Filter Element with Reverse Flow Valve

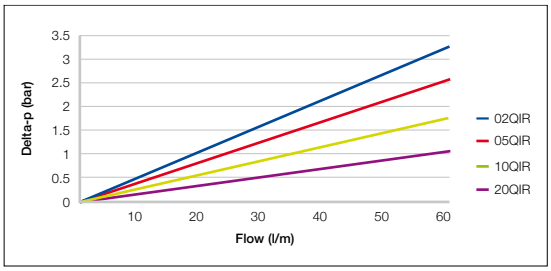

EAPF Size 1 Length 2 Filter Element with Reverse Flow Valve

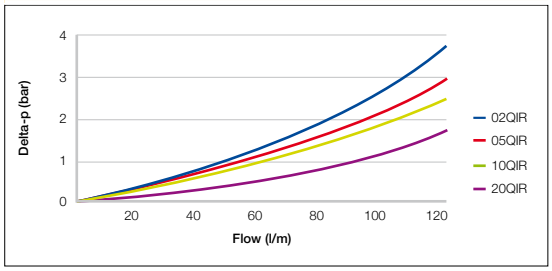

EAPF *i*protect®

Filter Configuration for Back - Flush Systems

Parker provides tailor-made filtration solutions. For systems with back-flush requirements a customised solution can be considered. Parker Filtration can integrate condition monitoring, instrumentation and fluid control valve technology into the filter. Please consult your local Parker representative for more information.

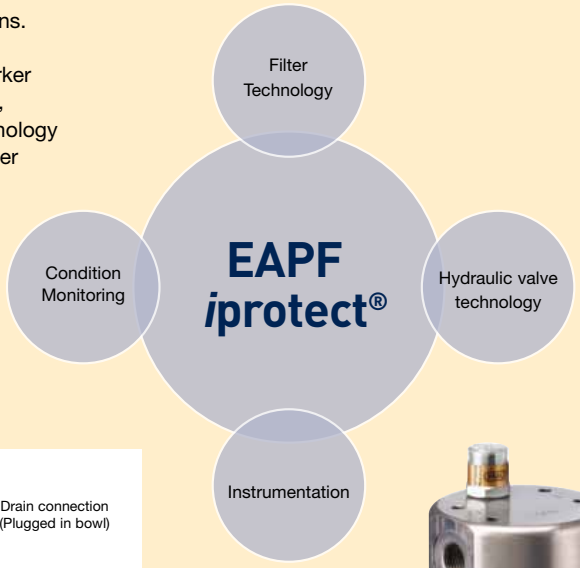

EAPF circuit
Back flush filter version

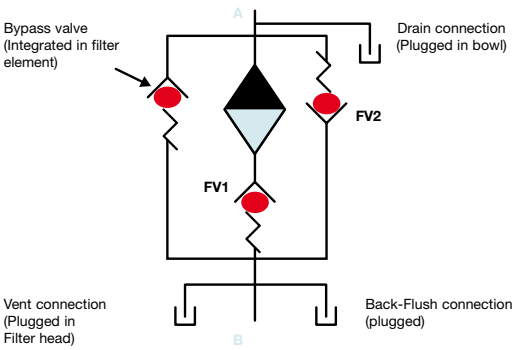



EAPF *i*protect® - Size 1

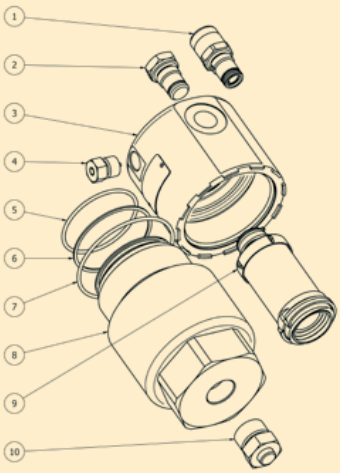

Index	Description	Part Number
1	Indicator	On Request
2	Plug	On Request
3	Filter head	On Request
4	Vent plug	On Request
5	O-ring	In seal kit
6	Back-up ring	In seal kit
7	O-ring	In seal kit
8	Filter bowl	On Request
9	Filter element	On Request
10	Drain plug	On Request

Filter	Nitrile	Fluorelastomer
EAPF Size 1	EAPFSK001	EAPFSK002

Indicator Options

FMU Δp-Indicators and Pressure Indicators

FMUT Electrical

Rated voltage	Non-inductive load (A)				Inductive load (A)				Inrush current (A)	
	Resistive load		Lamp load		Inductive load		Motor load			
	N.C.	N.O.	N.C.	N.O.	N.C.	N.O.	N.C.	N.O.	N.C.	N.O.
125VAC	5		1.5	0.7	3		2.5	1.3	20 max.	10 max.
250VAC	3		1.0	0.5	2		1.5	0.8		
8VDC	5		2		5	4	3			
14VDC	5		2		4	4	3			
30VDC	4		2		3	3	3			
125VDC	0.4		0.05		0.4	0.4	0.05			
250VDC	0.2		0.03		0.2	0.2	0.03			

Electrical Indicator Type T1

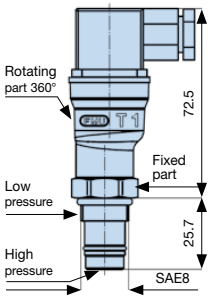

Contact configuration

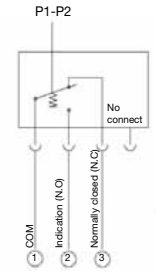

Enclosure class	IP65
Electrical connector	DIN 43650
Overvoltage category	II (EN61010-1)

Electrical Connection

Voltage: 10 - 36 Vdc
Current: 300 MA (Max.)
Cable: Halogen free HABIA N2419 I14 4x0, 3mm
Red = Input voltage
Blue = GND
White = Pre - Indication
Black = Indication

FMUX ATEX Approved Electronic

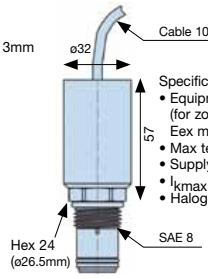

FMUM3 Visual Auto Reset Operation

Red colour visible when indicator on

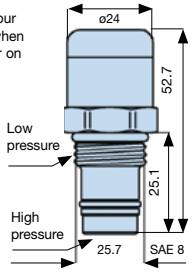

Ordering Information

Box 1	Box 2	Box 3	Box 4	Box 5	Box 6	Box 7	Box 8
EAPF1	2	05QI	B	X1	M	N08	1

Box 1

Capacity	
Model	Code
Size 1	EAPF1

Box 4

Seal Material	
	Code
Nitrile	B
Fluorelastomer	V

Box 8

Options		
		Code
Standard		1
No bypass		2
Reverse flow valve	Safeguard valve only in combination with 3.5 bar bypass	RFV
ATEX certified* (Category 2, non-electrical equipment)		EX

Note 1: Important notes: When no bypass is selected Parker strongly advices the usage of high strength elements

Note 2*: For ATEX classified filters add EX after the code. ATEX certified filters with electrical indicator are available on request. Visual indicators are classified as Category 2, non electrical equipment. Filter assemblies with EX code will be supplied with a dedicated name plate. Pls consult Parker Filtration for any questions related to the classification of our products.

Box 2

Filter Length	
	Code
Length 1 (60 l/min)	1
Length 2 (120 l/min)	2

Box 6

Bypass Setting		
	Indicator Setting	Code
3.5 bar	2.5 bar	K
5.0 bar	4.0 bar	L
7.0 bar	5.0 bar	M
No bypass	5.0 bar	M
No bypass	No indicator	X

Highlights Key (Denotes part number availability)

123	Item is standard
123	Item is standard green option
123	Item is semi standard
123	Item is non standard

Box 3

Degree of filtration				
	Media code			
iprotect® Glassfibre element	02QI	05QI	10QI	20QI
iprotect® high strength element	02QIH	05QIH	10QIH	20QIH
iprotect® with reverse flow valve(*)	02QIR	05QIR	10QIR	20QIR

(*Note: Only in combination with 3.5 bar bypass)

Box 5

Indicator	
	Code
Visual Indicator	M3
Electrical Indicator (non ATEX)	T1
Ex version, PNP, NO (LED's are not available)	X1
Electronic 4 LED, PNP, NO	on request
Electronic 4 LED, NPN, NO	on request
Electronic 4 LED, PNP, NC	on request
Electronic 4 LED, NPN, NC	on request
Plugged with Stainless Steel plug	P
No indicator port	N

Box 7

Filter Connection		
	Connection type & size	Code
Size 1	Thread ½" NPT	N08
	Thread G½"	G08
	Autoclave	on request

EMDPF *i*protect®

(Manually Operated High Pressure Duplex Filter)

High Pressure Filters
Max. 300 l/min - 420 bar



A compact, cost effective pressure filter solution

Designed with the *i*protect® patented filtration technology

The Parker EMDPF *i*protect® duplex filter is designed to provide high quality filtration of hydraulic and lubrication type systems, providing new possibilities to reduce the cost of ownership by improving productivity and profitability.

A radical, innovative approach was applied with the design of the EMDPF duplex family. The standard range covers a flow capacity up to 300 l/min at 420 bar working pressure.

A new patented design of the filter element allows integration of the bypass valve and element core as re-usable parts in the filter bowl. This makes the product foolproof as there is no risk of forgetting to re-install re-usable parts.

Because the filter element remains in the bowl during service events, less space is needed to change the filter element.

The EMDPF features various safety functions such as integrated pressure equalizing line, pressure peak protection of the element indicator and low torque for switching the ball valve. High quality seal technology makes the change of the filter element possible with the system able to continue operating.



Product Features:

The Parker element design guarantees the quality of filtration, which directly impacts on the oil cleanliness level as the usage of pirate type after market filters with unknown quality of filter media is excluded. This in-build safety has a direct, positive impact on the productivity of equipment.

- Guaranteed quality of filtration
- Filter element remains in-bowl during service
- Maximum use of re-usable parts
- Integrated safety functions
- Unique OEM branding opportunities
- No risk of installation mistakes due to a foolproof design

EMDPF *i*protect®

High Pressure Filters

Features	Advantages	Benefits
Patented filter element	Avoid use of non-genuine parts	Guaranteed quality of filtration
Filter element remains in filter bowl	Less space needed to change/service filter	More compact solutions are possible
		Reduce service time for filter by over 40%
Environmentally-friendly design	Reduces environmental waste over 50%	Lower disposal cost
Service-friendly product design	No handling of loose re-usable parts	No risk of making mistakes during change of element
Bypass valve integral part of filter bowl	Easy to integrate in manifold systems	More compact and lower cost of manifold (only one cavity is needed)
	Lower pressure loss across filter	Saving energy, improving system efficiency
Wide range of differential pressure indicators	Continuous feedback of filter element condition	Optimizing filter element life
		Contributes to scheduled maintenance

Typical Applications

- Servo controls
- Industrial working hydraulics
- Control systems



EMDPF *i*protect® applies the latest generation of Microglass III filter media. The patented element design guarantees the quality of filtration.

The Parker EMDPF *i*protect® series patented bypass valve technology

Bypass settings are available up to 7 bar or completely blocked in conjunction with patented, high strength filter elements. The principle is based on differential pressure measurement across the filter element. During bypass only a part of the main flow is flowing through the bypass valve.

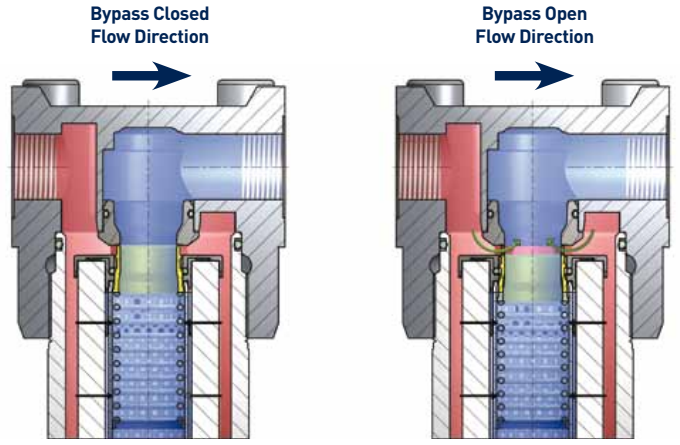

Protecting your system and the environment

Protect your system performance and profit



The new *i*protect® generation of filter elements provide high filtration performance combined with Parker technology. The bespoke design prevents the use of pirate type alternatives.

Less space needed to accommodate the filter



More compact solutions are possible as the filter element remains in the filter bowl during change of filter element. Compared to traditional solutions it does not only save space, it also reduces the required manual handling during the filter change process.

Saving cost and our environment



What does it take to introduce a new ground-breaking design which saves the environment? Parker's EMDPF *i*protect® applies a re-usable element core and bypass, both integral parts of the filter bowl. This solution avoids the handling of re-usable parts during element change and reduces over 50% disposal weight.

Smart valve technology



Parker hydraulic control valve technology is applied for the reusable bypass valve. This leakage-free valve has a patented interface with the filter element, which ensures that genuine parts are always applied. With bypass settings up to 7 bar filtration during cold start conditions, more compact solutions, can be realised. The valve also optimizes the flow path, reducing the pressure lost across the filter.

Easier to integrate



Parker has set the trend to integrate filtration into manifolds. With Parker's EMDPF *i*protect® we have taken the design one step further. Only one cavity is needed to accomodate the filter instead of two, this is because the re-usable bypass valve is integrated into the filter bowl, reducing space and cost.

Customized solutions



Parker's motion & control technologies provide new opportunities for our customers. Customized manifolds or duplex filters, as in this example offer complete automatic change-over. The EMDPF *i*protect® contributes to realizing new solutions, improving your productivity and profitability.

A protective 'gene'

The performance and profitability of systems directly depends upon the filter media.



It goes without saying that Parker's products aim to avoid the use of unknown filter performance, jeopardizing safety and performance. Our Microglass III media is continuously upgraded and acts as a protective 'gene' in the system.

When going into reverse



Parker's EMDPF can be equipped with an optional reverse flow. This valve assembly is integrated in the element end cap and isolates the filter medium during reverse flow conditions.

A new design of the filter element allows integration of the bypass valve and element core as re-usable parts in the filter bowl. This results in cost reduction when integrating the high pressure filter in manifold type solutions. But it also reduces the waste when changing the filter element by over 50% as the element core is an integral part of the filter bowl.
The design of the EMDPF *i*protect®, is unique, there is no need to re-install any re-usable parts as with some other filters in the market. This makes the product fool proof as there is no risk of forgetting to re-install re-usable parts.



Replacing the filter element:

- Drain the filter housing using the plugged drain port.
- Thanks to the filter lock the element remains in the bowl.
- Pull out the old element. The re-usable element core and bypass valve are integral parts of the bowl.
- Filtration is from 'Out to In,' the element core is located in the clean oil side.
- Just drop the new element in the bowl.
- Screw the bowl, including element into the filter head.

Tel: +45 63 12 83 00 | Email: ps@hymatik.com | www.hymatik.com | Hvidkaervej 27a, DK-5250 Odense SV, Denmark

EMDPF *i*protect®

Circuit diagram

EMDPF *i*protect®

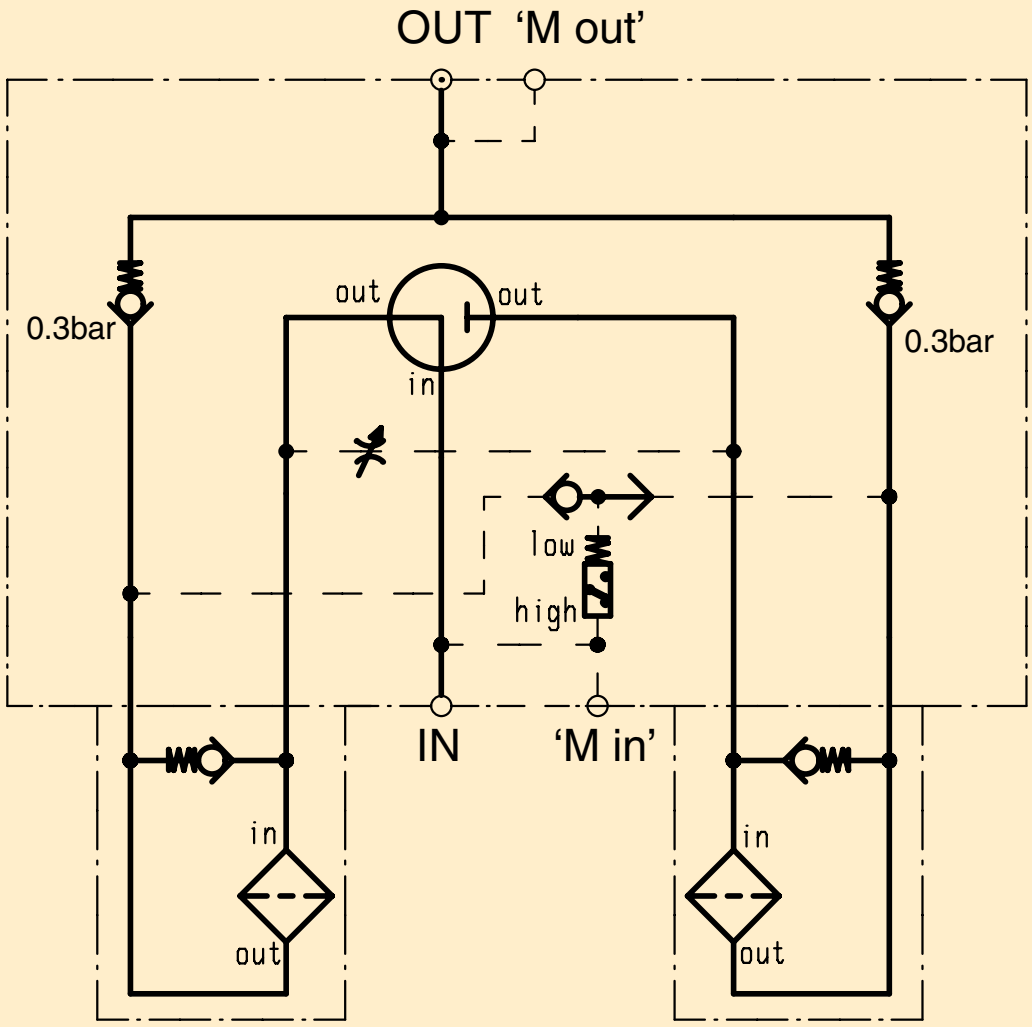

Principle of Operation

The EMDPF iprotect® features a 3/2-way ball valve to control the main flow through the filter.

This 3/2-way ball valve is manual operated.

To avoid excessive pressure peaks during the change-over process, Parker's EMDPF features an integrated equalizing line. Using a needle valve this equalizing line is opened before changing-over the main 3/2-way ball valve. After change-over this equalizing line needs to be closed.

Two one-way flow valves are integrated in the filter to avoid unwanted reverse flow of oil through the filter element.

Parker recommends applying a differential pressure indicator to obtain information about the condition of the filter element. A wide range of visual, electrical and electronic type indicators are available.

The differential pressure indicator is protected against excessive pressure peaks by using an integrated shutter valve in the sensing lines. Min and Mout are plugged measurement connection points.

Tel: +45 63 12 83 00 | Email: ps@hymatik.com | www.hymatik.com | Hvidkaervej 27a, DK-5250 Odense SV, Denmark

Applying Innovation

EMDPF iprotect and the icount Condition Monitoring Family

EMDPF *i*protect® and icount Particle Detection

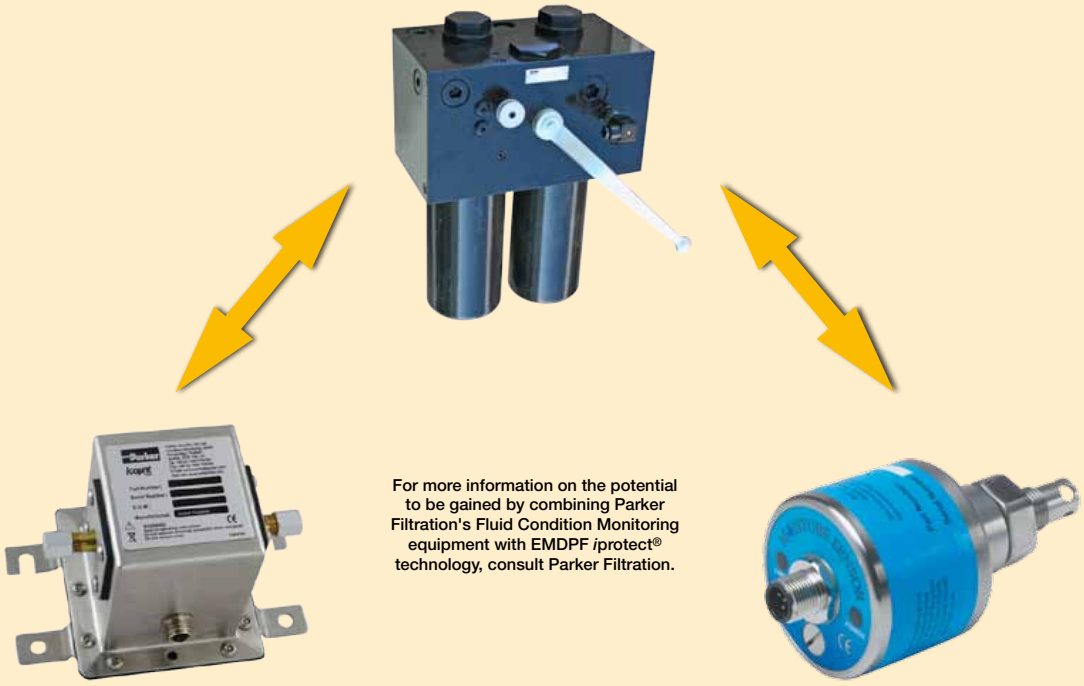

For more information on the potential to be gained by combining Parker Filtration's Fluid Condition Monitoring equipment with EMDPF *i*protect® technology, consult Parker Filtration.

Parker's worldwide experience in Fluid Condition Monitoring and Contamination Control

Parker's ability to provide engineered solutions is embedded in the modular product architecture when it comes to filtration and condition monitoring solutions.

Besides protecting the system against contamination by applying quality filtration, the importance of having real-time information about the system cleanliness level or oil condition is becoming more important.

Based on customized manifolds, unique opportunities are present to combine or integrate condition monitoring sensors with our filters.

icount Particle Detection

The icount PD Particle Detector from Parker represents the most up to date technology in particle detection. The robust design of the housing allows operation in heavy duty environments.

The on-board laser based technology provides direct information about the fluid cleanliness level.

By implementing particle detection, important information about the system contamination trends can be obtained. Integrated LED or digital displays provide indication of low, medium and high contamination levels.

Moisture measurement

Moisture is the second largest source of contamination after solid type contamination. Both account for over 80% of failures of hydraulic systems.

High moisture levels accelerate the process of oil degradation, having direct negative impact on the fluid's performance. Hydraulic fluids are engineered to provide high performance lubrication, protection against corrosion and energy transfer. Oil degradation reduces the fluid life time and as a consequence, the life time of components when efficient lubrication is no longer provided.

By measuring the fluid's moisture level, adequate maintenance can be scheduled in time before system breakdowns or excessive wear & tear to system components occur.

The MS moisture sensor range can be integrated in customized manifold blocks.

The icount particle detector family can also be equipped with an optional moisture sensor.

EMDPF *i*protect®

Size 3

Specification EMDPF *i*protect®

Specification
Nominal flow 150 l/min

Pressure ratings
Maximum allowable working pressure 420 bar

Connections
Integrated in block

Connection style
Thread G1"
SAE-flange 1¼" SAE-6000M
'M in'/ 'M out': G1¼"

Filter housing
EMDPF Head material: steel
Bowl material: steel

Seal material
Nitrile or Fluorelastomer

Operating temperature range
Seal material Nitrile : -40 °C to +100 °C
Seal material Fluorelastomer : -20 °C to +120 °C

Bypass valve & Indicator settings

Bypass	Indicator
3.5 bar	2.5 bar
5.0 bar	3.5 bar
7.0 bar	5.0 bar
Blocked	5.0 bar

Filter element
Degree of filtration
Determined by multipass test in accordance with ISO16889

Flow fatigue characteristics
Filter media is supported so that the optimal fatigue life is achieved (ISO 3724)

Microglass III
Supported with epoxy coated metal wire mesh, end cap material reinforced composite and reusable metal inner core. Collapse pressure 25 bar (ISO 2941)

High collapse elements
To be used when bypass blocked option is selected
Collapse pressure 210 bar (ISO 2941)

Indicator options
Indicating differential pressure:
2.5 +/- 0.3 bar
3.5 +/- 0.3 bar
5.0 +/- 0.3 bar

Visual M3
Electrical T1
Electronic F1 (PNP)
Electronic F2 (NPN)
ATEX versions are available on request

Weights
EMDPF Size 3 length 1: 55 kg
EMDPF Size 3 length 2: 57 kg

Fluid compatibility
- Hydraulic mineral oils H to class HLPD (DIN51524)
- Operating fluids DIN ISO 2943
- Lubrication fluids ISO6743, APJ, DIN 51517, ACEA, ASTM
- Vegetable oils
- 60/40 Water Glycols
- On request - Industrial grade phosphate esters
- Non aggressive synthetic oils
- Non aggressive bio-degradable oils (HETG, HEPG and HEES to VDMA 24568)

EMDPF *i*protect® - Size 3 Duplex

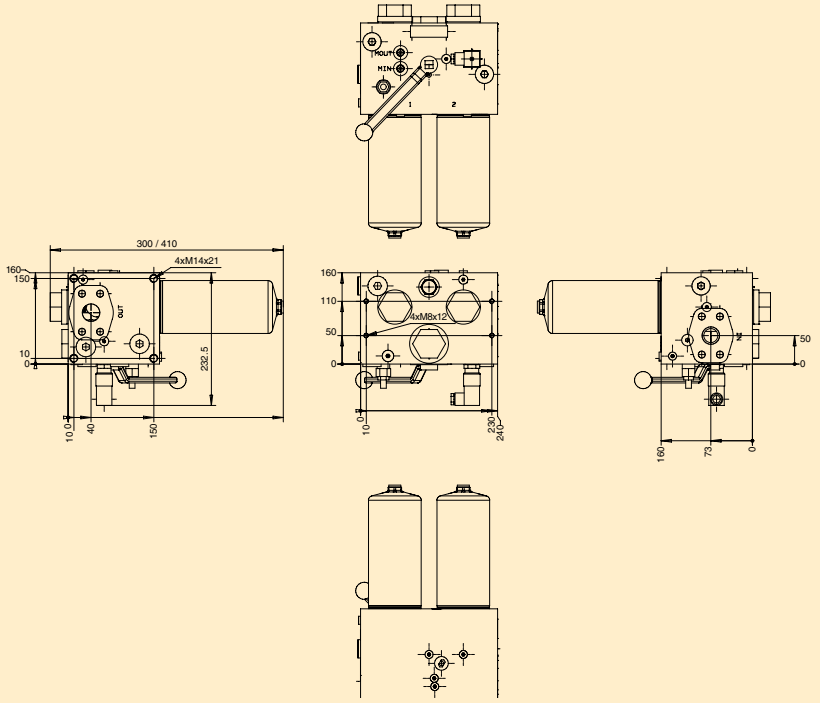

Tel: +45 63 12 83 00 | Email: ps@hymatik.com | www.hymatik.com | Hvidkaervej 27a, DK-5250 Odense SV, Denmark

EMDPF *i*protect® Size 3 Pressure Drop Curves

If the media used has a viscosity different from 30cSt. pressure drop over the filter can be estimated as follows:
The total Δp = housing Δph + (element Δpe x working viscosity/30).

Size 3 L1	EMDPF Size 3 Length 1 Dp Elements (bar)			
Flow (l/min)	02QI	05QI	10QI	20QI
0	0	0	0	0
50	0.65	0.43	0.26	0.16
100	1.29	0.87	0.53	0.32
150	1.94	1.30	0.79	0.47
200	2.58	1.73	1.05	0.63

EMDFP Size 3 Length 1 Filter Elements

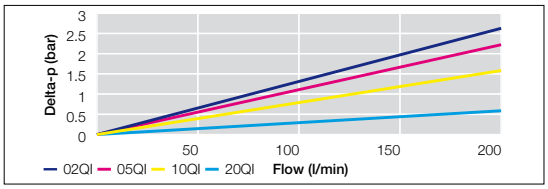

Size 3	Empty Housing (bar)	
Flow (l/min)	Dp Housing (bar)	Dp Housing (bar) Handle in the Middle
0	0	0
50	0,77	0,55
100	1,99	1,56
150	3,84	3,07

EMDPF Size 3 Empty Housing

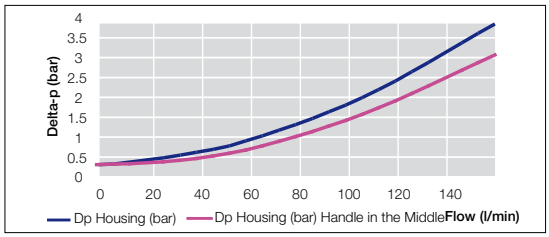

Size 3 L2	EMDPF Size 3 Length 2 Dp Elements (bar)			
Flow (l/min)	02QI	05QI	10QI	20QI
0	0	0	0	0
50	0.32	0.28	0.18	0.15
100	0.64	0.56	0.37	0.30
150	0.97	0.85	0.55	0.45
200	1.29	1.13	0.74	0.60
250	1.61	1.41	0.92	0.75

EMDPF Size 3 Length 2 Filter Elements

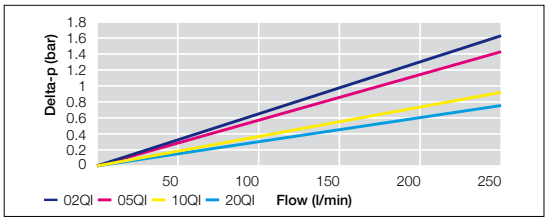

Tel: +45 63 12 83 00 | Email: ps@hymatik.com | www.hymatik.com | Hvidkaervej 27a, DK-5250 Odense SV, Denmark

EMDPF *i*protect®

Size 4

Specification EMDPF *i*protect®

Specification
Nominal flow 300 l/min

Pressure ratings
Maximum allowable working pressure 420 bar

Connections
Integrated in block

Connection style
Thread G1½"
SAE-flange 1½" SAE-6000M
MIN/MOUT : G¼"

Filter housing
EMDPF Head material: steel
Bowl material: steel

Seal material
Nitrile or Fluorelastomer

Operating temperature range
Seal material Nitrile : -40 °C to +100 °C
Seal material Fluorelastomer : -20 °C to +120 °C

Bypass valve & Indicator settings

Bypass	Indicator
3.5 bar	2.5 bar
5.0 bar	3.5 bar
7.0 bar	5.0 bar
Blocked	7.0 bar

Filter element
Degree of filtration
Determined by multipass test in accordance with ISO16889

Flow fatigue characteristics
Filter media is supported so that the optimal fatigue life is achieved (ISO 3724)

Microglass III
Supported with epoxy coated metal wire mesh, end cap material reinforced composite and reusable metal inner core. Collapse pressure 25 bar (ISO 2941)

High collapse elements
To be used when bypass blocked option is selected
Collapse pressure 210 bar (ISO 2941)

Indicator options
Indicating differential pressure:
2.5 +/- 0.3 bar
3.5 +/- 0.3 bar
5.0 +/- 0.3 bar

Visual M3
Electrical T1
Electronic F1 (PNP)
Electronic F2 (NPN)
ATEX versions are available on request

Weights
EMDPF Size 4 length 1: 111 kg
EMDPF Size 4 length 2: 116 kg

Fluid compatibility
- Hydraulic mineral oils H to class HLPD (DIN51524)
- Operating fluids DIN ISO 2943
- Lubrication fluids ISO6743, APJ, DIN 51517, ACEA, ASTM
- Vegetable oils
- 60/40 Water Glycols
- On request - Industrial grade phosphate esters
- Non aggressive synthetic oils
- Non aggressive bio-degradable oils (HETG, HEPG and HEES to VDMA 24568)

EMDPF *i*protect® - Size 4 Duplex

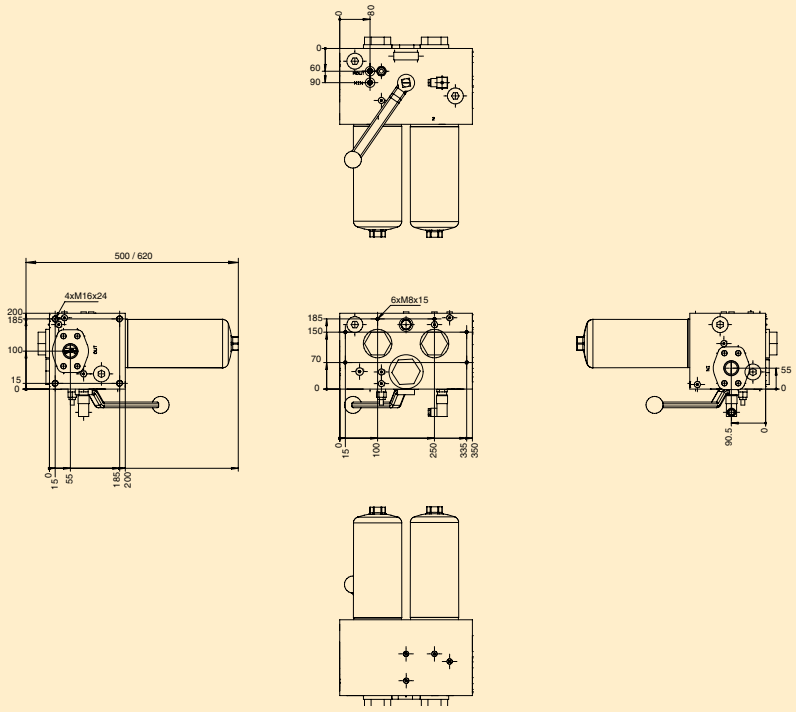

Tel: +45 63 12 83 00 | Email: ps@hymatik.com | www.hymatik.com | Hvidkaervej 27a, DK-5250 Odense SV, Denmark

EMDPF *i*protect® Size 4 Pressure Drop Curves

If the media used has a viscosity different from 30cSt. pressure drop over the filter can be estimated as follows:
The total Δp = housing Δph + (element Δpe x working viscosity/30).

Size 4 L1	EMDPF Size 4 Length 1 Filter Elements			
Flow (l/min)	02QI	05QI	10QI	20QI
0	0	0	0	0
100	0.48	0.4	0.26	0.2
200	0.96	0.8	0.52	0.4
300	1.44	1.2	0.78	0.6
400	1.92	1.6	1.04	0.8
500	2.4	2	1.3	1

EMDFP Size 4 Length 1 Filter Elements

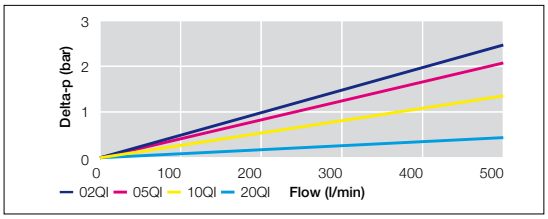

Size 4	EMDPF Size 4 Empty Housing (bar)	
Flow (l/min)	Dp Housing (bar)	Dp Housing (bar) Handle in the Middle
0	0	0
50	0,36	0,33
100	0,8	0,6
150	1,32	1,05
200	1,97	1,63
250	2,7	2,28
300	3,8	2,9

EMDPF Size 4 Empty Housing



Size 4 L2	EMDPF Size 4 Length 2 Filter Elements (bar)			
Flow (l/min)	02QI	05QI	10QI	20QI
0	0	0	0	0
100	0.31	0.26	0.176	0.132
200	0.62	0.52	0.352	0.26
300	0.94	0.78	0.528	0.40
400	1.25	1.04	0.704	0.528
500	1.56	1.3	0.88	0.66

EMDPF Size 4 Length 2 Filter Elements

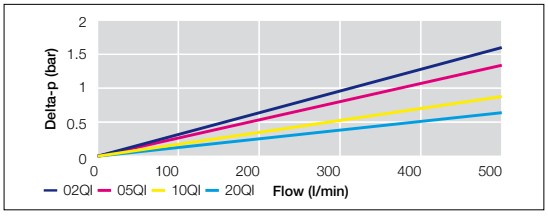

Indicator Options

FMU Δp-Indicators and Pressure Indicators

FMUT Electrical

Rated voltage	Non-inductive load (A)				Inductive load (A)				Inrush current (A)	
	Resistive load		Lamp load		Inductive load		Motor load			
	N.C.	N.O.	N.C.	N.O.	N.C.	N.O.	N.C.	N.O.	N.C.	N.O.
125VAC	5		1.5	0.7	3		2.5	1.3	20 max.	10 max.
250VAC	3		1.0	0.5	2		1.5	0.8		
8VDC	5		2		5	4	3			
14VDC	5		2		4	4	3			
30VDC	4		2		3	3	3			
125VDC	0.4		0.05		0.4	0.4	0.05			
250VDC	0.2		0.03		0.2	0.2	0.03			

Enclosure class	IP65
Electrical connector	DIN 43650
Overvoltage category	II (EN61010-1)

Contact configuration
Electrical Indicator Type T1

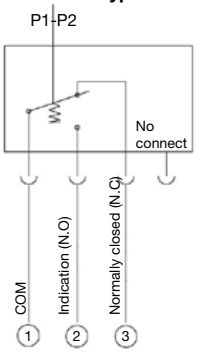

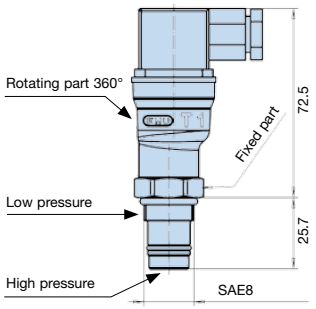

FMUM3 Visual Auto Reset Operation

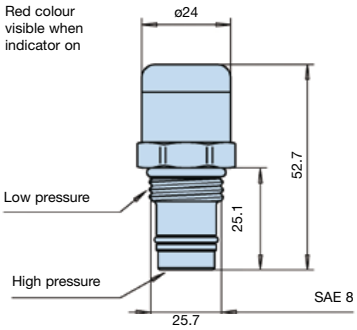

FMUF Electronic

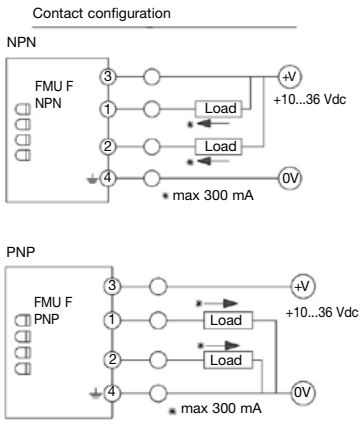

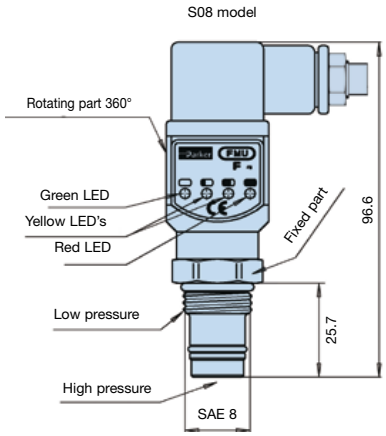

Thermal lock-out (standard setting +20 °C)

- Indicator operates only when temperature is above setting.

Ind. press. setting	LED status				Output
	G	Y1	Y2	R	
< 50 %	⊗				-
50 %	⊗	⊗			-
75 %	⊗	⊗	⊗		2 active
100 %	⊗	⊗	⊗	⊗	1 active

Enclosure class	IP65
Electrical connector	DIN 43650, cable connection PG9 or optinally M12 4-pin
Input supply voltage	+10 to 36 Vdc
*Indication output	max. 300 mA/36 Vdc
Output type:	N.O. or N.C./NPN or PNP

Note: Do not connect output terminals 1 or 2 directly (without load) to power supply terminals, because this will damage the equipment.

Filter media efficiency

Degree of filtration						Code	
Average filtration beta ratio ß (ISO 16889) / particle size µm [c]							
ßx(c)=2	ßx(c)=10	ßx(c)=75	ßx(c)=100	ßx(c)=200	ßx(c)=1000		
% efficiency, based on the above beta ration (ßx)						Disposable Microglass III	Element with reverse flow valve
50.0%	90.0%	98.7%	99.0%	99.5%	99.9%		
N/A	N/A	N/A	N/A	N/A	4.5%	**02QI**	**02QIR**
N/A	N/A	4.5	5	6	7	**05QI**	**05QIR**
N/A	6	8.5	9	10	12	**10QI**	**10QIR**
6	11	17	18	20	22	**20QI**	**20QIR**

Ordering information. Standard part numbers

Visual Indicators	Part Number	Setting (bar)
	FMUM3MVMS08	5

Electrical Indicators	Part Number	Setting (bar)	Switch Type	Additional
	FMUT1MVMS08	5	NO/NC	
	FMUF1MVMS08	5	NO	Electronic 4 LED, PNP
	FMUF2MVMS08	5	NO	Electronic 4 LED, NPN
	FMUF3MVMS08	5	NC	Electronic 4 LED, PNP
	FMUF4MVMS08	5	NC	Electronic 4 LED, NPN

Spare elements (Type QI only. Type QIR and QIH on request)

EMDPF Size 3 L1 2 micron	944434Q	**EMDPF Size 3 L2 10 micron**	944440Q	**EMDPF Size 4 L2 2 micron**	944446Q
EMDPF Size 3 L1 5 micron	944435Q	**EMDPF Size 3 L2 20 micron**	944441Q	**EMDPF Size 4 L2 5 micron**	944447Q
EMDPF Size 3 L1 10 micron	944436Q	**EMDPF Size 4 L1 2 micron**	944442Q	**EMDPF Size 4 L2 10 micron**	944448Q
EMDPF Size 3 L1 20 micron	944437Q	**EMDPF Size 4 L1 5 micron**	944443Q	**EMDPF Size 4 L2 20 micron**	944449Q
EMDPF Size 3 L2 2 micron	944438Q	**EMDPF Size 4 L1 10 micron**	944444Q		
EMDPF Size 3 L2 5 micron	944439Q	**EMDPF Size 4 L1 20 micron**	944445Q		

Tel: +45 63 12 83 00 | Email: ps@hymatik.com | www.hymatik.com | Hvidkaervej 27a, DK-5250 Odense SV, Denmark

EMDPF *i*protect®

High Pressure Duplex Filter

Ordering Information

Box 1	Box 2	Box 3	Box 4	Box 5	Box 6	Box 7	Box 8
EMDPF3	2	02QI	B	P	M	G16	1

Box 1

Capacity	
Model	Code
Size 3	EMDPF3
Size 4	EMDPF4

Box 2

Filter Length	
	Code
Length 1	1
Length 2	2

Highlights Key
(Denotes part number availability)

123	Item is standard
123	Item is standard green option
123	Item is semi standard
123	Item is non standard

Box 3

Degree of filtration				
	Media code			
*i*protect® Glassfibre element(*)	02QI	05QI	10QI	20QI

* High collapse elements type QIH on request

Box 4

Seal Material	
	Code
Nitrile	B
Fluorelastomer	V

Box 5

Indicator	
	Code
Visual Indicator	M3
Electrical Indicator	T1
Electronic 4 LED, PNP, NO	F1
Electronic 4 LED, NPN, NO	F2
Electronic 4 LED, PNP, NC	F3
Electronic 4 LED, NPN, NC	F4
Plugged with Steel plug	P
No indicator port	N

Other versions like ATEX on request
All electrical indicators are CE-certified

Box 6

Bypass Setting		
	Indicator Setting	Code
3.5 bar	2.5 bar	K
5.0 bar	3.5 bar	L
7.0 bar	5.0 bar	M
No bypass	5.0 bar	M
No bypass	No indicator	X

Important notes: When no bypass is selected Parker strongly advices the usage of high strengh elements

Box 7

Filter Connection		
	Connection type & size	Code
Size 3	Thread 1" BSP	G16
	SAE - flange 11/4" 6000M	H20
Size 4	Thread 11/4" BSP	G20
	SAE - flange 11/2" 6000M	H24

Box 8

Options		
		Code
Standard		1
No Bypass		2

Tel: +45 63 12 83 00 | Email: ps@hymatik.com | www.hymatik.com | Hvidkaervej 27a, DK-5250 Odense SV, Denmark

EADPF *i*protect® Series

High Pressure Duplex Filters
Max. 320 l/min - 350 bar



Automatic duplex filters increase safety

New patented duplex filter technology offers continuous automated protection

The EADPF Series utilizes a unique patented element design named *i*protect®. The ecological design reduces environmental impact over 50% typically and covers flow rates up to 320 l/min at 350 bar. This 'smart' element is integrated into a duplex head featuring a fully automatic change over. One or two differential pressure indicators are used to control the duplex filter. A unique aspect is that the system pressure is used for the pilot lines operating the flow control valves, isolating or putting the filter bowl with the clean element into service.



Contact Information:

Parker Hannifin
Hydraulic Filter Division Europe

European Product Information Centre
Freephone: 00800 27 27 5374
(from AT, BE, CH, CZ, DE, EE, ES, FI, FR, IE, IT, PT, SE, SK, UK)
filtrationinfo@parker.com

www.parker.com/hfde

Product Features:

- The quality of filtration is protected.
- Rated at 350 bar for flows up to 320 l/min.
- Multiple bypass settings up to 7 bar or blocked with 210 bar rated high collapse element.
- EADPF duplex filters feature fully automatic element change-over.
- For more information contact Parker Filtration.

Important Information

WARNING-USER RESPONSIBILITY

FAILURE OR IMPROPER SELECTION OR IMPROPER USE OF THE PRODUCTS DESCRIBED HEREIN OR RELATED ITEMS CAN CAUSE DEATH, PERSONAL INJURY AND PROPERTY DAMAGE.

- This document and other information from Parker-Hannifin Corporation, its subsidiaries and authorized distributors provide product or system options for further investigation by users having technical expertise.
- The user, through their own analysis and testing, is solely responsible for making the final selection of the system and components and assuring that all performance, endurance, maintenance, safety and warning requirements of the applications are met.

  The user must analyse all aspects of the application, follow applicable industry standards, and follow the information concerning the product in the current product catalogue and in any other materials provided from Parker or its subsidiaries or authorized distributors.
- To the extent that Parker or its subsidiaries or authorized distributors provide component or system options based upon data or specifications provided by the user, the user is responsible for determining that such data and specifications are suitable and sufficient for all applications and reasonably foreseeable uses of the components or systems.

The operation of the products described here in is subject to the operating and safety procedures details of which are available upon request.

Sales conditions
The items described in this document are available for sale by Parker Hannifin Corporation, its subsidiaries or its authorized distributors. Any sale contract entered into by Parker will be governed by the provisions stated in Parker's standard terms and conditions of sale (copy available upon request)

18/28/38P Series

High Pressure Filters
Max 700 l/min - 414 bar



The all-round high pressure filter solution

Robust housing for heavy duty applications

The 18/28/38P Series features a range of head and bowl sizes and connection options. Microglass III glassfibre media is standard. Maximum pressure 414 bar. Maximum flow 700 l/min. A globally proven filter with optimized sizing for a wide range of industrial applications.



Contact Information:

Parker Hannifin
Hydraulic Filter Division Europe

European Product Information Centre
Freephone: 00800 27 27 5374
(from AT, BE, CH, CZ, DE, EE, ES, FI, FR, IE, IT, PT, SE, SK, UK)
filtrationinfo@parker.com

www.parker.com/hfde

Product Features:

- Multiple bypass settings up to 7 bar.
- 18/28/38P features a range of head and bowl sizes and connection options.
- Microglass III glassfibre media is standard.
- Maximum pressure 414 bar. Maximum flow 700 l/min.
- A proven filter solution for 'heavy duty' hydraulic systems.

18/28/38P Series

High Pressure Filters

Features & Benefits

Features	Advantages	Benefits
Fatigue tested to full pressure rating	Strong and robust housing for heavy duty applications	Reliable and continuous operation both in mobile and industrial applications
Several head sizes	Optimised sizing	Efficient filtration
		Covers wide flow range
Several connection options	Easy mounting	Global design, global acceptance
		Right filter for each application
Microglass III replacement elements	Multi-layered design produced high capacity and efficiency	Great performance value
		Reliable performance throughout element life
	Wire support reduces pleat bunching, keeps performance consistent	Reduces downtime, maximises element life
Visual, electrical and electronic indicators available	Check element condition at a glance	Optimises element life, prevents bypassing
	Right style for the application	Matches your system electrical connections

Typical Applications

- Injection moulding
- Die casting
- Servo controls
- Machine tools
- Mobile equipment

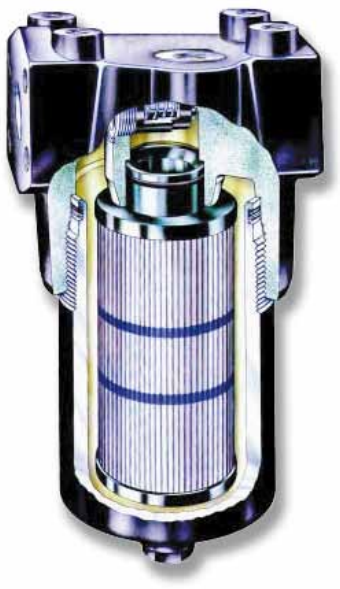

The Parker Filtration 18/28/38P Series High Pressure Filters

Parker Filtration engineered the 18/28/38P series of high pressure filters to satisfy demanding applications in the mobile and industrial markets throughout the world. With metric mounting and optional ISO 6149 ports, this new series is truly a global design.

Installed downstream of the pump, this new series with their wide range of high capacity Microglass III elements, offer excellent protection to system components.

Standard filters come complete with industry proven spool type bypass valve. For more critical applications such as servo or proportional controls, a no bypass high strength element combination ensures maximum protection.

The modular low hysteresis differential pressure indicator fitted to this series is unrivaled in its performance. Tests prove its accuracy and foolproof design to be a major advance in indicator technology.

Tel: +45 63 12 83 00 | Email: ps@hymatik.com | www.hymatik.com | Hvidkaervej 27a, DK-5250 Odense SV, Denmark

Specification

Pressure ratings:
Maximum allowable operating pressure 414 bar.
Filter housing pressure pulse fatigue tested: 10^6 pulses 0 - 414 bar.

Connections:
Inlet and outlet connections are threaded internally or flange faced.

Connection style	*Model* 18P	28P	38P
BSPF(G)	3/4"	1"	1 1/4", 1 1/2"
SAE	12	16	20, 24
ISO 6149	M27	M33	M42, M48
Flange SAE 6000	3/4"	1"	1 1/4"
Flange SAE 6000-M*	3/4"	1"	1 1/4"

*6000-M is a SAE style with appropriate metric fixing threads.

Filter housing:
Head material cast iron (GSI).
Bowl material steel.

Seal material:
Nitrile or Fluoroelastomer.

Operating temperature range:
Seal material Nitrile: -40 °C to +100 °C.
Seal material Fluoroelastomer: -20 °C to +120 °C.

Bypass valve & indicator settings:
Table below gives bypass valve and corresponding indicator setting.

Bypass	*Indicator*
3.5 bar	2.5 bar
7.0 bar	5.0 bar

Filter element:
Degree of filtration:
Determined by multipass-test according to ISO 16889.

Flow fatigue characteristics:
Filter media is supported so that the optimal fatigue life is achieved (ISO 3724).

Microglass III:
Supported with epoxy coated metal wire mesh, end cap material reinforced composite and metal inner core. Collapse rating 20 bar (ISO 2941).

High collapse elements:
(To be used when no bypass function in filter housing).
Microglass III media supported with epoxy coated metal wire mesh on upstream and stainless steel on downstream, end cap material steel. Strong metal inner core. Collapse rating 210 bar (ISO 2941).

Indicator options:
Indicating differential pressure: 2.5 ± 0.3 bar or 5.0 ± 0.5 bar.
- visual M3.
- electrical T1.
- electronic F1(PNP).
- electronic F2(NPN).

For indicator details see catalogue section 6.

Weights (kg):

Model	*Length 1*	*Length 2*
18P	4.2	5.7
28P	6.7	9.2
38P	15.8	20.3

Fluid compatibility:
Suitable for use with mineral and vegetable oils, and some synthetic oils.
For other fluids, please consult Parker Filtration.

Model	A	B	C	D	E (A/F)	F	G	H	J	K	L	M	N	P
18P-1	198 (7.79)	32 (1.26)	26 (1.02)	75 (2.95)	24 (0.94)	100 (3.94)	98 (3.86)	40 (1.57)	20 (0.79)	80 (3.15)	40 (1.57)	55 (2.16)	110 (4.33)	M8 x 1.25 x12 deep
18P-2	293 (11.53)													
28P-1	228 (8.97)	40 (1.57)	29 (1.14)	93 (3.66)	24 (0.94)		120 (4.72)	55 (2.16)	27.5 (1.07)	90 (3.54)	45 (1.77)	62 (2.44)	124 (4.88)	M10 x 1.5 x11 deep
28P-2	337 (13.26)													
38P-1	329 (12.95)	44 (1.73)	35 (1.38)	128 (5.04)	36 (1.42)		160 (6.30)	50 (1.97)	25 (0.98)	120 (4.72)	60 (2.36)	81 (3.19)	162 (6.38)	M10 x 1.5 x12 deep
38P-2	448 (17.64)													

18P

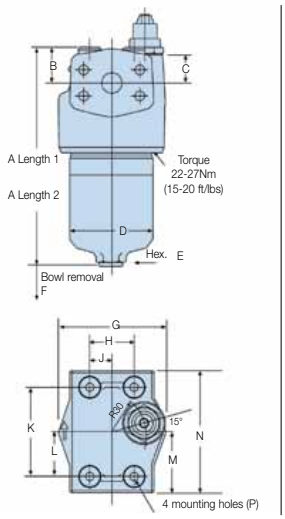

28P

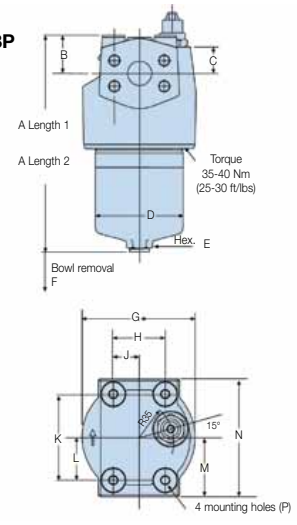

38P

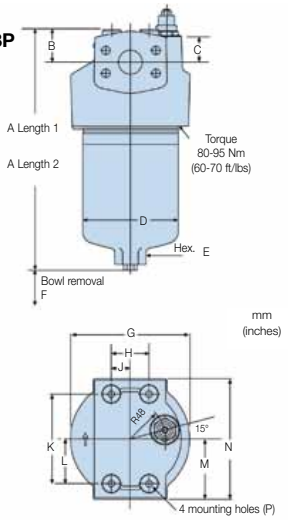

Tel: +45 63 12 83 00 | Email: ps@hymatik.com | www.hymatik.com | Hvidkaervej 27a, DK-5250 Odense SV, Denmark

18/28/38P Series

High Pressure Filters

Flange Face Details

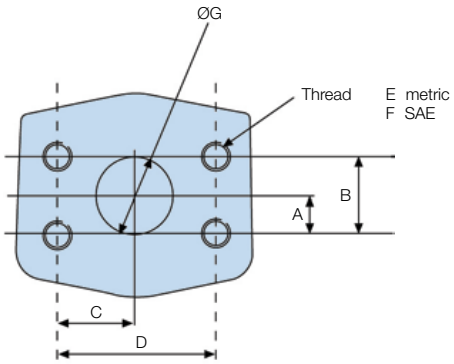

Model mm (inches)	A	B	C	D	E	F	G
18P (3/4")	11.9 (0.47)	23.8 (0.94)	25.4 (1.00)	50.8 (2.0)	M10 x 1.5-6H x 18 Deep	3/8-16 UNC-2B x 18 deep	19.0 (0.75)
28P (1")	14 (0.55)	27.8 (1.09)	28.0 (1.10)	57.1 (2.25)	M12 x 1.75-6H x 20 Deep	7/16-14 UNC-2B x 20 deep	25.4 (1.0)
38P (1 1/4")	15.7 (0.62)	31.7 (1.25)	33.0 (1.30)	66.7 (2.62)	M14 x 2-6H x 20 Deep	1/2-13 UNC-2B x 20 deep	31.8 (1.25)

Pressure Drop Curves

With 3.5 bar bypass the recommended initial pressure drop is max 1.2 bar.
With 7.0 bar bypass the recommended initial pressure drop is max 2.3 bar.
If the medium used has a viscosity different from 30 cSt, pressure drop over the filter can be estimated as follows:
The total Δp = housing Δph + (element Δpe x working viscosity/30).

18P-1 Elements

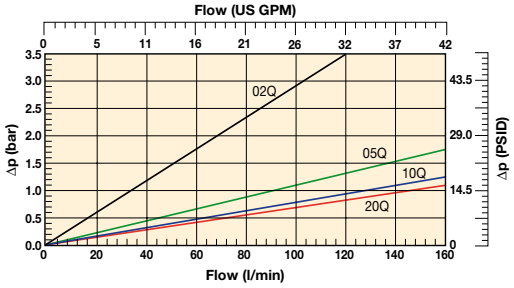

18P-2 Elements

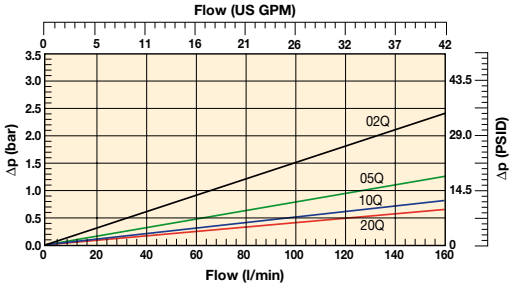

18P-1 Empty Housing and High Collapse

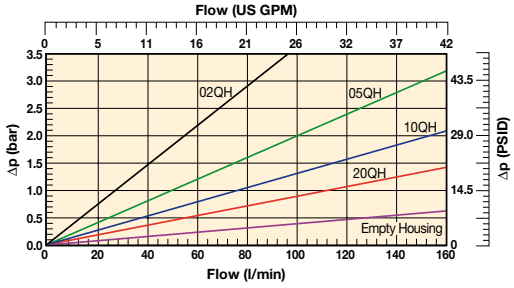

18P-2 High Collapse Elements

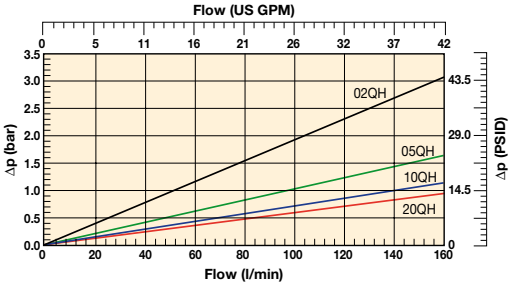

28P-1 Elements

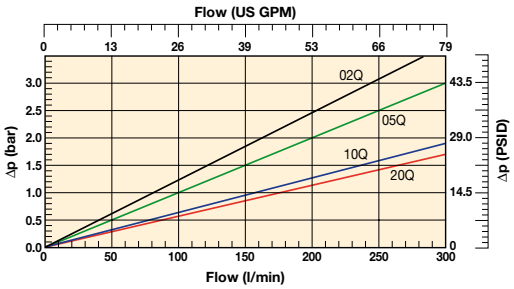

28P-2 Elements

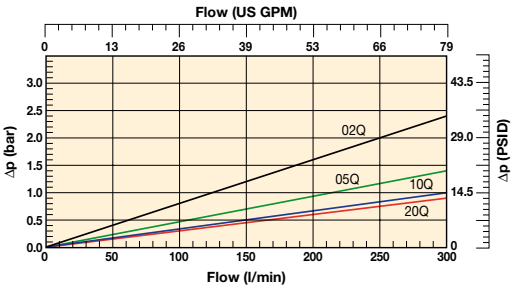

28P-1 Empty Housing and High Collapse

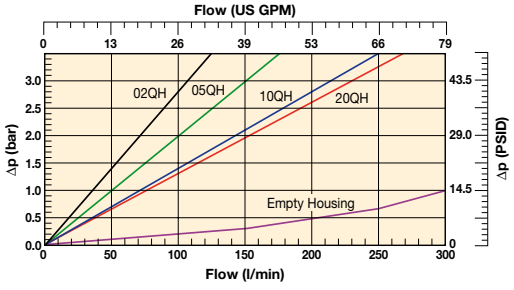

28P-2 High Collapse Elements

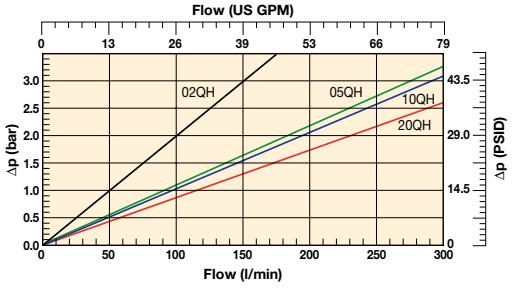

Tel: +45 63 12 83 00 | Email: ps@hymatik.com | www.hymatik.com | Hvidkaervej 27a, DK-5250 Odense SV, Denmark

18/28/38P Series

High Pressure Filters

Pressure Drop Curves (cont.)

38P-1 Elements

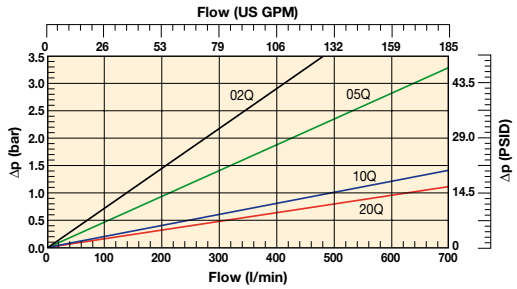

38P-2 Elements

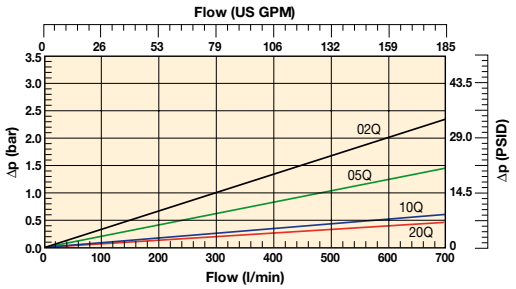

38P-1 Empty Housing and High Collapse

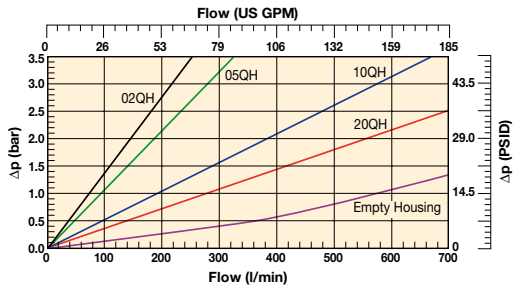

38P-2 High Collapse Elements

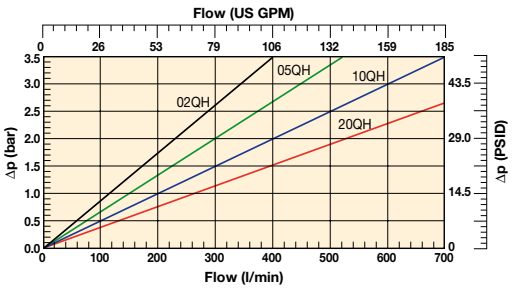

Element Service

A. Stop the system's power unit.
B. Relieve any system pressure in the filter line.
C. Drain the filter bowl if drain port option is provided.
D. Rotate the bowl clockwise (left) and remove.
E. Remove element by pulling downward with a slight twisting motion and discard.
F. Check bowl o-ring and anti-extrusion ring for damage and replace if necessary.
G. Lubricate element o-ring with system fluid and locate element in filter head.
H. Install bowl by rotating counter-clockwise (right) and tighten to specified torque.
   18P - 22-27 Nm (16-20 ft. lbs.)
   28P - 35-40 Nm (25-30 ft. lbs.)
   38P - 80-95 Nm (60-70 ft. lbs.)
I. Confirm there are no leaks after powering the system.

Parts List

Index	Description	Part number
1	**Head Assembly**	
2	**Element**	see table on
3	**Bowl**	next page
	Indicators	
4	M3 – Visual auto reset; 2.5 bar	FMUM3KVMU14H
	M3 – Visual auto reset; 5.0 bar	FMUM3MVMU14H
5	T1 – Electrical; 2.5 bar with DIN 43650 Connector	FMUT1KVMU14H
	T1 – Electrical; 5.0 bar with DIN 43650 Connector	FMUT1MVMU14H
	F1 – Electronic PNP; 2.5 bar with 4 LED	FMUF1KVMU14H
	F2 – Electronic NPN; 2.5 bar with 4 LED	FMUF2KVMU14H
	F1 – Electronic PNP; 5.0 bar with 4 LED	FMUF1MVMU14H
	F2 – Electronic NPN; 5.0 bar with 4 LED	FMUF2MVMU14H
6	**Bowl Seal**	
7	**Bowl Anti-extrusion Ring**	
	Seal Kits	
	Seal kit 18P (std) – Nitrile	S04350
	Seal kit 18P (F3) – Fluoroelastomer	S04351
	Seal kit 28P (std) – Nitrile	S04352
	Seal kit 28P (F3) – Fluoroelastomer	S04353
	Seal kit 38P (std) – Nitrile	S04354
	Seal Kit 38P (F3) – Fluoroelastomer	S04355

Element Service (cont.)

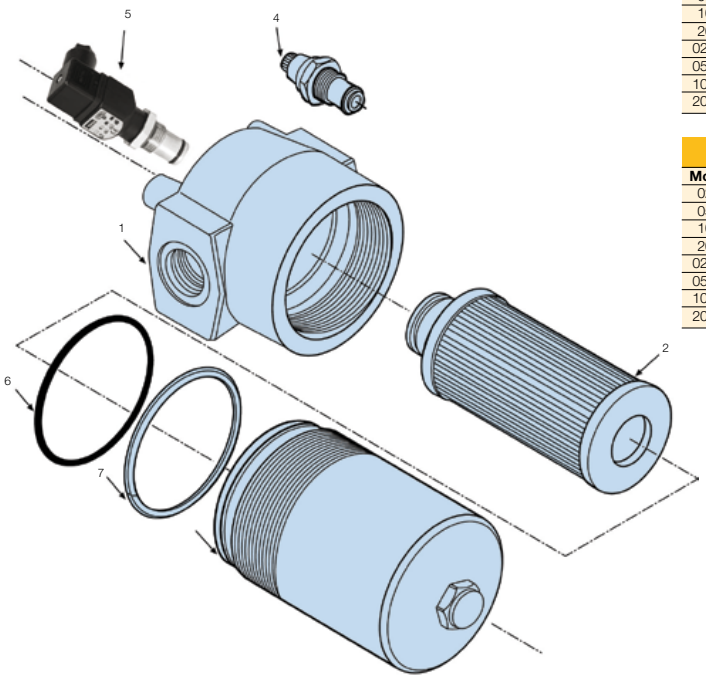

Replacement element part numbers

Elements with Nitrile seals						
Model	**18P-1**	**18P-2**	**28P-1**	**28P-2**	**38P-1**	**38P-2**
02Q	**G04242**	**G04250**	**G04258**	**G04266**	**G04274**	**G04282**
05Q	**G04243**	**G04251**	**G04259**	**G04267**	**G04275**	**G04283**
10Q	**G04244**	**G04252**	**G04260**	**G04268**	**G04276**	**G04284**
20Q	**G04245**	**G04253**	**G04261**	**G04269**	**G04277**	**G04285**
02QH	**G04290**	**G04298**	**G04306**	**G04314**	**G04322**	**G04330**
05QH	**G04291**	**G04299**	**G04307**	**G04315**	**G04323**	**G04331**
10QH	**G04292**	**G04300**	**G04308**	**G04316**	**G04324**	**G04332**
20QH	**G04293**	**G04301**	**G04309**	**G04317**	**G04325**	**G04333**

Elements with Fluoroelastomer seals						
Model	**18P-1**	**18P-2**	**28P-1**	**28P-2**	**38P-1**	**38P-2**
02Q	G04246	G04254	G04262	G04270	G04278	G04286
05Q	G04247	G04255	G04263	G04271	G04279	G04287
10Q	G04248	G04256	G04264	G04272	G04280	G04288
20Q	G04249	G04257	G04265	G04273	G04281	G04289
02QH	G04294	G04302	G04310	G04318	G04326	G04334
05QH	G04295	G04303	G04311	G04319	G04327	G04335
10QH	G04296	G04304	G04312	G04320	G04328	G04336
20QH	G04297	G04305	G04313	G04321	G04329	G04337

Ordering Information

Standard products table

Part number	Supersedes	Flow (l/min)	Model number	Element length	Media rating (µ)	Seals	Indicator	Bypass settings	Ports	Replacement elements
18P110QBT1MG121	18P-1-10Q-TW6-98-B2B2-1	80	18P	Length 1	10	Nitrile	Electrical	7.0 bar	G3/4"	**G04244**
18P110QBM3MG121	18P-1-10Q-M2-98-B2B2-1	80	18P	Length 1	10	Nitrile	Visual	7.0 bar	G3/4"	**G04244**
18P120QBT1MG121	18P-1-20Q-TW6-98-B2B2-1	100	18P	Length 1	20	Nitrile	Electrical	7.0 bar	G3/4"	**G04245**
18P120QBM3MG121	18P-1-20Q-M2-98-B2B2-1	100	18P	Length 1	20	Nitrile	Visual	7.0 bar	G3/4"	**G04245**
18P210QBT1MG121	18P-2-10Q-TW6-98-B2B2-1	130	18P	Length 2	10	Nitrile	Electrical	7.0 bar	G3/4"	**G04252**
18P210QBM3MG121	18P-2-10Q-M2-98-B2B2-1	130	18P	Length 2	10	Nitrile	Visual	7.0 bar	G3/4"	**G04252**
18P220QBT1MG121	18P-2-20Q-TW6-98-B2B2-1	150	18P	Length 2	20	Nitrile	Electrical	7.0 bar	G3/4"	**G04253**
18P220QBM3MG121	18P-2-20Q-M2-98-B2B2-1	150	18P	Length 2	20	Nitrile	Visual	7.0 bar	G3/4"	**G04253**
28P110QBT1MG161	28P-1-10Q-TW6-98-C2C2-1	120	28P	Length 1	10	Nitrile	Electrical	7.0 bar	G1"	**G04260**
28P110QBM3MG161	28P-1-10Q-M2-98-C2C2-1	120	28P	Length 1	10	Nitrile	Visual	7.0 bar	G1"	**G04260**
28P120QBT1MG161	28P-1-20Q-TW6-98-C2C2-1	150	28P	Length 1	20	Nitrile	Electrical	7.0 bar	G1"	**G04261**
28P120QBM3MG161	28P-1-20Q-M2-98-C2C2-1	150	28P	Length 1	20	Nitrile	Visual	7.0 bar	G1"	**G04261**
28P210QBT1MG161	28P-2-10Q-TW6-98-C2C2-1	250	28P	Length 2	10	Nitrile	Electrical	7.0 bar	G1"	**G04268**
28P210QBM3MG161	28P-2-10Q-M2-98-C2C2-1	250	28P	Length 2	10	Nitrile	Visual	7.0 bar	G1"	**G04268**
38P110QBT1MG201	38P-1-10Q-TW6-98-D2D2-1	340	38P	Length 1	10	Nitrile	Electrical	7.0 bar	G1¼"	**G04276**
38P110QBM3MG201	38P-1-10Q-M2-98-D2D2-1	340	38P	Length 1	10	Nitrile	Visual	7.0 bar	G1¼"	**G04276**
38P120QBT1MG201	38P-1-20Q-TW6-98-D2D2-1	420	38P	Length 1	20	Nitrile	Electrical	7.0 bar	G1¼"	**G04277**
38P120QBM3MG201	38P-1-20Q-M2-98-D2D2-1	420	38P	Length 1	20	Nitrile	Visual	7.0 bar	G1¼"	**G04277**
38P210QBT1MG201	38P-2-10Q-TW6-98-D2D2-1	560	38P	Length 2	10	Nitrile	Electrical	7.0 bar	G1¼"	**G04284**
38P210QBM3MG201	38P-2-10Q-M2-98-D2D2-1	560	38P	Length 2	10	Nitrile	Visual	7.0 bar	G1¼"	**G04284**
38P220QBT1MG201	38P-2-20Q-TW6-98-D2D2-1	700	38P	Length 2	20	Nitrile	Electrical	7.0 bar	G1¼"	**G04285**
38P220QBM3MG201	38P-2-20Q-M2-98-D2D2-1	700	38P	Length 2	20	Nitrile	Visual	7.0 bar	G1¼"	**G04285**

Note: Filter assemblies ordered from the product configurator on the next page are on extended lead times. Where possible, please make your selection from the table above.

Tel: +45 63 12 83 00 | Email: ps@hymatik.com | www.hymatik.com | Hvidkaervej 27a, DK-5250 Odense SV, Denmark

18/28/38P Series

High Pressure Filters

Ordering Information (cont.)

Product configurator

Box 1	Box 2	Box 3	Box 4	Box 5	Box 6	Box 7	Box 8
38P	**1**	**10Q**	**B**	**M3**	**M**	**G20**	**1**

Box 1

Code	
Model	**Code**
Small size high pressure filter, T-port	**18P**
Medium size high pressure filter, T-port	**28P**
Large size high pressure filter, T-port	**38P**

Highlights Key (Denotes part number availability)

123	Item is standard
123	Item is standard green option
123	Item is semi standard
123	Item is non standard

Box 2

Filter type	
Length	**Code**
Length 1	**1**
Length 2	**2**

Box 3

Degree of filtration				
Element media	**Glass fibre**			
	Media code			
Microglass III element	**02Q**	**05Q**	**10Q**	**20Q**
High collapse element	**02QH**	**05QH**	**10QH**	**20QH**

Box 4

Seal type	
Seal material	**Code**
Nitrile	**B**
Fluoroelastomer	V

Box 5

Indicator	
	Code
No indicator port	**N**
Visual indicator	**M3**
Electrical indicator	**T1**
Plugged with steel plug	P
Electronic 4 LED, PNP, N.O.	F1
Electronic 4 LED, NPN, N.O.	F2
Electronic 4 LED, PNP, N.C.	F3
Electronic 4 LED, NPN, N.C.	F4

Box 6

Bypass and indicator settings			
Bypass valve	**Indicator**	**Code**	
3.5 bar	2.5 bar	**K**	
7.0 bar	5.0 bar	**M**	
No bypass	5.0 bar	**M**	+ Box 8: code 2
No bypass	No indicator	**X**	+ Box 8: code 2

When filter includes a bypass valve but not an indicator, code denotes bypass setting.

Box 7

Filter connection		
Ports		**Code**
18P:	Thread G ³/₄	**G12**
	Thread SAE 12	S12
	Thread M27, ISO 6149	M27
	SAE flange ³/₄" 6000-M	H12
	SAE flange ³/₄" 6000	F12
28P:	Thread G 1	**G16**
	Thread SAE 16	S16
	Thread M33, ISO 6149	M33
	SAE flange 1" 6000-M	H16
	SAE flange 1" 6000	F16
38P:	Thread G 1 ¹/₄	**G20**
	Thread G 1 ¹/₂	**G24**
	Thread SAE 20	S20
	Thread SAE 24	S24
	Thread M42, ISO 6149	M42
	Thread M48, ISO 6149	M48
	SAE flange 1 ¹/₄" 6000-M	**H20**
	SAE flange 1 ¹/₄" 6000	F20

Box 8

Options	
Options	**Code**
Standard	**1**
No bypass	**2**
ATEX certified* (Category 2, non-electrical equipment)	EX

Note 1*: For ATEX classified filters add EX after the code. ATEX certified filters with electrical indicator are available on request. Visual indicators are classified as Category 2, non eletrical equipment. Filter assemblies with EX code will be supplied with a dedicated name plate. Pls consult Parker Filtration for any questions related to the classification of our products.

Nominal flow (l/min) at viscosity 30 cSt				
Filter model	02Q	05Q	10Q	20Q
18P-1	35	60	80	100
18P-2	70	110	130	150
28P-1	80	100	120	150
28P-2	140	200	250	300
38P-1	140	220	340	420
38P-2	320	440	560	700

18/28/38P Series Seal Kits	
Part Number	**Description**
S04350	NITRILE SEAL KIT 18P
S04351	FLUOROELASTOMER SEAL KIT 18P
S04352	NITRILE SEAL KIT 28P
S04353	FLUOROELASTOMER SEAL KIT 28P
S04354	NITRILE SEAL KIT 38P
S04355	FLUOROELASTOMER SEAL KIT 38P

Degree of filtration						Code	
Average filtration beta ratio ß (ISO 16889) / particle size µm [c]							
ßx(c)=2	**ßx(c)=10**	**ßx(c)=75**	**ßx(c)=100**	**ßx(c)=200**	**ßx(c)=1000**		
% efficiency, based on the above beta ratio (ßx)						Disposable	High collapse
50.0%	**90.0%**	**98.7%**	**99.0%**	**99.5%**	**99.9%**	Microglass III	element
N/A	N/A	N/A	N/A	N/A	4.5	**02Q**	**02QH**
N/A	N/A	4.5	5	6	7	**05Q**	**05QH**
N/A	6	8.5	9	10	12	**10Q**	**10QH**
6	11	17	18	20	22	**20Q**	**20QH**

Note 1: Part numbers featured with bold highlighted codes will ensure a 'standard' product selection.
Note 2: Alternate displayed part number selection will require you to contact Parker Filtration for availability.

Parker Hannifin
Hydraulic Filter Division Europe
FDHB500UK/18/28/38P

70/70 Eco Series

High Pressure Filters
Max 450 l/min - 420 bar



When flexibility meets reducing environmental impact

A proven filter offering reduced space and piping

The 70/70 Eco Series features a range of head and bowl sizes and connection options. Microglass III glassfibre and Ecoglass III media is available. Maximum pressure 420 bar. Maximum flow 450 l/min. A proven, strong and robust filter for heavy duty applications.



Contact Information:

Parker Hannifin
Hydraulic Filter Division Europe

European Product Information Centre
Freephone: 00800 27 27 5374
(from AT, BE, CH, CZ, DE, EE, ES, FI, FR, IE, IT, PT, SE, SK, UK)
filtrationinfo@parker.com

www.parker.com/hfde

Product Features:

- 70/70 Eco features a range of head and bowl sizes and connection options.
- Microglass III glassfibre and Ecoglass III media is available.
- Maximum pressure 420 bar. Maximum flow 450 l/min.
- A proven filter offering high levels of system protection.

Tel: +45 63 12 83 00 | Email: ps@hymatik.com | www.hymatik.com | Hvidkaervej 27a, DK-5250 Odense SV, Denmark

70/70 Eco Series

High Pressure Filters

Features & Benefits

Features	Advantages	Benefits
Fatigue tested to full pressure rating	Strong and robust housing for heavy duty applications	Reliable and continuous operation both in mobile and industrial applications
Several head options and connection sizes	Easy mounting	Reduced space and piping
		Right filter for each application
Several bowl lengths	Optimised sizing	Efficient filtration
Microglass III replacement elements	Multi-layered design produced high capacity and efficiency	Great performance value
		Reliable performance throughout element life
	Wire support reduces pleat bunching, keeps performance consistent	Reduces downtime, maximises element life
Coreless Ecoglass III replacement elements	No metal content in element	Environmentally friendly disposal by incineration
	Reduced overall weight of 50%	
	Easy compaction of used elements	Lower element replacement costs
	Eco adaptors available	Lower disposal costs
		Retrofit coreless design to housings already installed
Visual, electrical and electronic indicators available	Check element condition at a glance	Optimise element life, prevent bypassing
	Right style for the application	Matches your system electrical connections

Typical Applications

- Forestry equipment
- Industrial power units
- Pulp and paper
- Port handling equipment
- Mining and quarrying equipment



The Parker Filtration 70/70 Eco Series High Pressure Filters.

High quality 420 bar in-line pressure filters designed to offer high levels of protection at flows up to 450 l/min.

Dirt sensitive systems can be protected with confidence using the 70 Series high pressure filters.

The 70 Series also available with environmentally friendly Ecoglass III elements.

Specification

Pressure ratings:
Maximum allowable operating pressure 420 bar (350 bar Length 4).
Filter housing pressure pulse fatigue tested: 10^6 pulses 0 - 414 bar.

Connections:
Threads G1, G1¼, G1½ (ISO 228/1).
or flanges 1¼" SAE 3000-M, 1½" SAE 3000-M, 1¼" SAE 6000-M, 1½" SAE 6000-M.

Filter housing:
Head material cast iron (GSI).
Bowl material steel. Max torque 40 Nm.

Seal material:
Nitrile or Fluoroelastomer.

Operating temperature range:
Seal material Nitrile: -40 °C to +100 °C.
Seal material Fluoroelastomer: -20 °C to +120 °C.

Bypass valve:
Opening pressure 3.5 bar.

Filter element:
Degree of filtration:
Determined by Multipass-test according to ISO 16889.

Flow fatigue characteristics:
Filter media is supported so that the optimal fatigue life is achieved (ISO 3724).

Microglass III:
Supported with epoxy coated metal wire mesh, end cap material reinforced composite and metal inner core.
Collapse rating 20 bar (ISO 2941).

Ecoglass III:
Supported with plastic net, end cap material reinforced composite. No metal parts.
Collapse rating 10 bar (ISO 2941).
Filter element can only be used together with reusable FEA Eco-adapter.
Note: Ecoglass III contributes to ISO 14001 quality.

High collapse elements:
(To be used when no bypass function in filter housing).
Microglass III media supported with epoxy coated metal wire mesh on upstream and stainless steel on downstream, end cap material steel. Strong metal inner core. Collapse rating 210 bar (ISO 2941).

Indicator options:
Indicating differential pressure: 2.5 ± 0.3 bar or 7.0 ± 0.5 bar.
2.5 bar indicators to be used with 3.5 bar bypass valve and 7.0 bar indicators with no bypass function.
- visual M3.
- electrical T1.
- electronic F1(PNP).
- electronic F2(NPN).

For indicator details see catalogue section 6.

Fluid compatibility:
Suitable for use with mineral and vegetable oils, and some synthetic oils. For other fluids, please consult Parker Filtration.

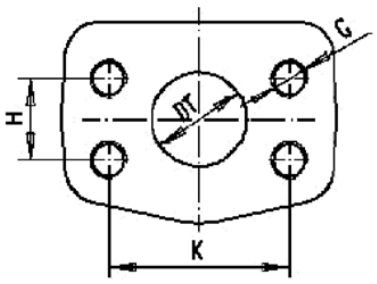

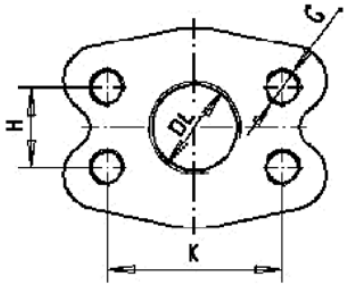

SAE Flange Dimensions

Type	K	H	DL	DT	G
1.1/4 SAE 3000 psi	58,7	30,2	Ø 36	31,8	M10-15
1.1/2 SAE 3000 psi	69,9	35,7	G1.1/4	38,1	M12-18
1.1/4 SAE 6000 psi	66,7	31,7	Ø 30,3	31,8	M14-19
1.1/4 SAE 6000 psi	79,4	36,5	G1.1/4	38,1	M16-21

Spare Eco adaptors that are needed for use with or changing to Eco elements are as follows

Filter Type	Eco Adaptor	Part Number
70-1	FEA7005.B	**911042090**
70-2	FEA7006.B	**911042087**
70-3	FEA7007.B	**911042091**
70-4	FEA7008.B	**911042092**

Tel: +45 63 12 83 00 | Email: ps@hymatik.com | www.hymatik.com | Hvidkaervej 27a, DK-5250 Odense SV, Denmark

70/70 Eco Series

High Pressure Filters

Specification

70B

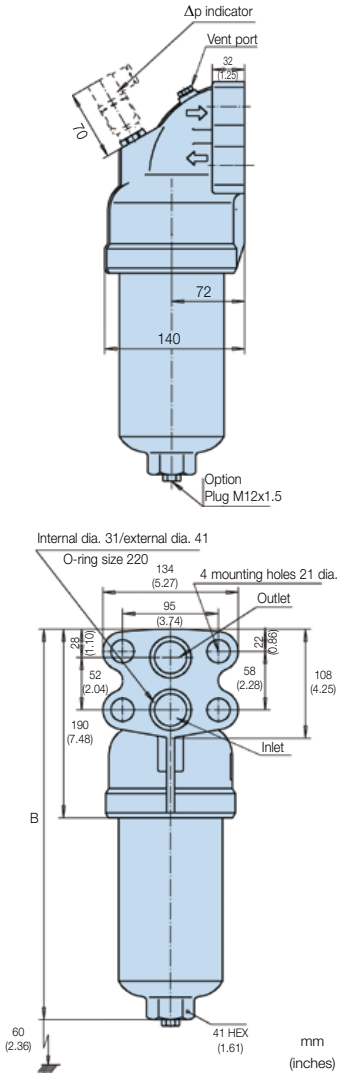

70T

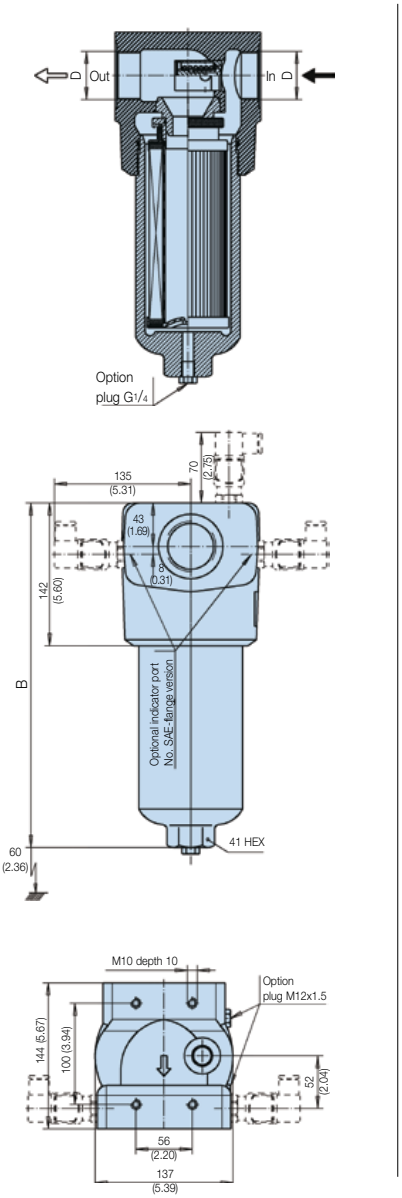

70L

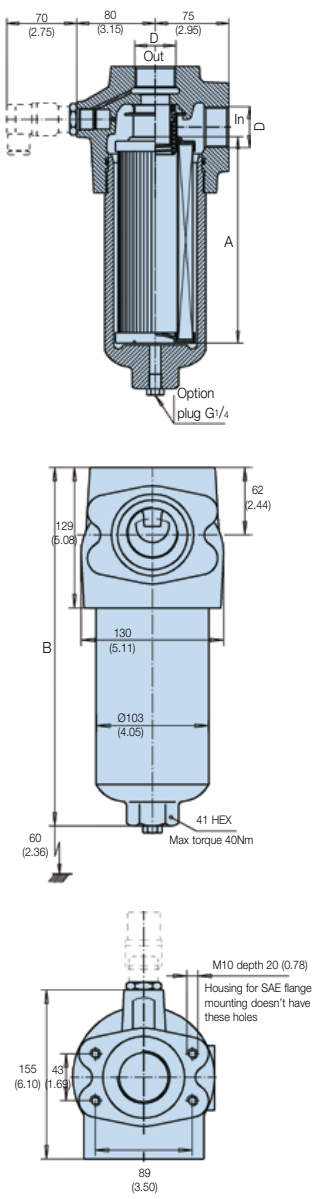

Weights (kg)			
Type	**70T**	**70L**	**70B**
Length 1	14	10.5	11.5
Length 2	16.5	13	14
Length 3	19	15.5	16.5
Length 4	22	18.5	19.5

Type	A	B 70T	B 70B	B 70L	Max working pressure	Port D
Length 1	116 (4.57)	249 (9.80)	295 (11.61)	235 (9.25)	420 bar	G1, G1¼ or G1½ Flange 1½ SAE 3000-M Flange 1¼ SAE 3000-M Flange 1½ SAE 6000-M Flange 1¼ SAE 6000-M
Length 2	208 (8.19)	342 (13.46)	390 (15.35)	330 (13.00)		
Length 3	329 (12.95)	462 (18.19)	510 (20.08)	450 (17.72)		
Length 4	428 (16.85)	562 (22.12)	610 (24.01)	550 (21.65)	350 bar	

Tel: +45 63 12 83 00 | Email: ps@hymatik.com | www.hymatik.com | Hvidkaervej 27a, DK-5250 Odense SV, Denmark

Pressure Drop Curves

With 3.5 bar bypass the recommended initial pressure drop is max 1.2 bar.
If the medium used has a viscosity different from 30 cSt, pressure drop over the filter can be estimated as follows:
The total Δp = housing Δph + (element Δpe x working viscosity/30).

70 Series Empty Housing

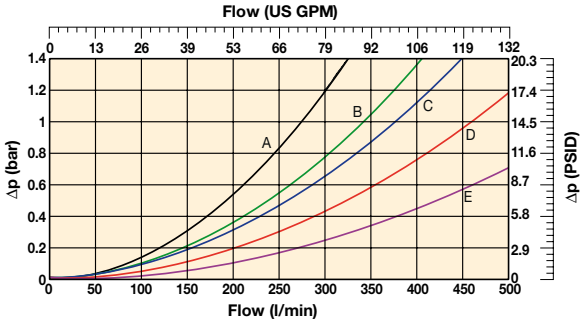

A: 70T with G16 connections
B: 70T with G20 connections and 70L with G16 connections
C: 70L with G20 connections and 70B
D: 70T with G24 connections
E: 70L with G24 connections

70-1 Elements with Microglass III

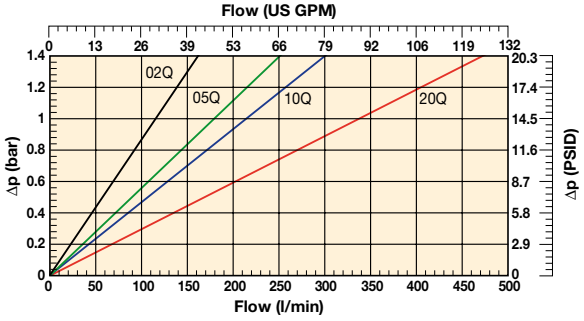

70-2 Elements with Microglass III

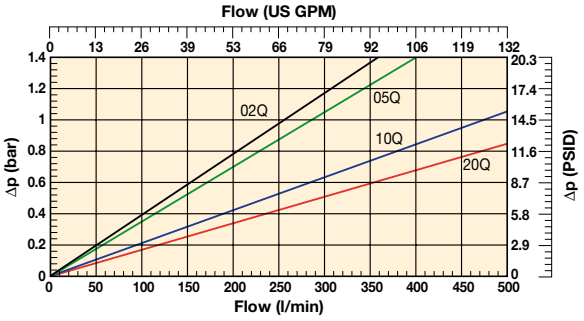

70-3 Elements with Microglass III

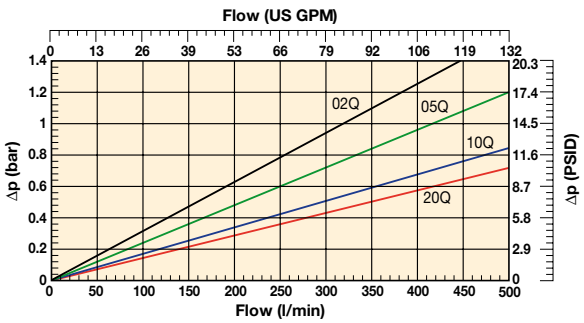

70-4 Elements with Microglass III

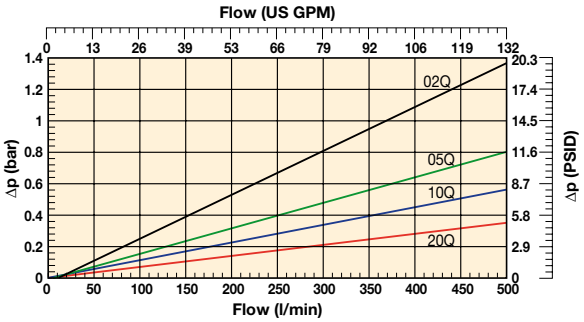

Tel: +45 63 12 83 00 | Email: ps@hymatik.com | www.hymatik.com | Hvidkaervej 27a, DK-5250 Odense SV, Denmark

70/70 Eco Series

High Pressure Filters

Pressure Drop Curves (cont.)

70-1 Elements with Ecoglass III

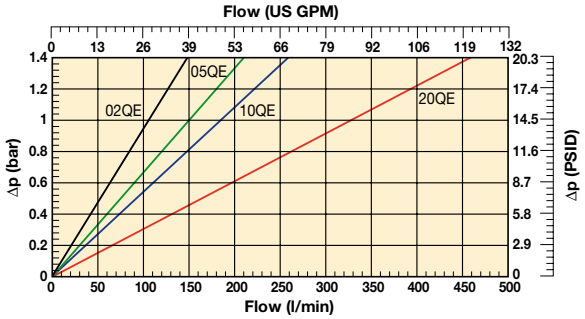

70-2 Elements with Ecoglass III

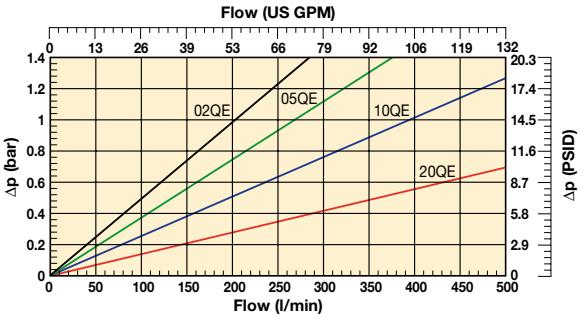

70-3 Elements with Ecoglass III

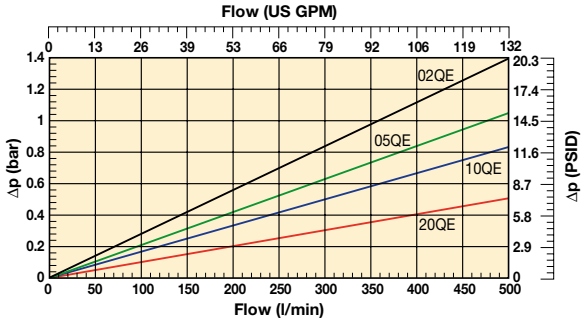

70-4 Elements with Ecoglass III

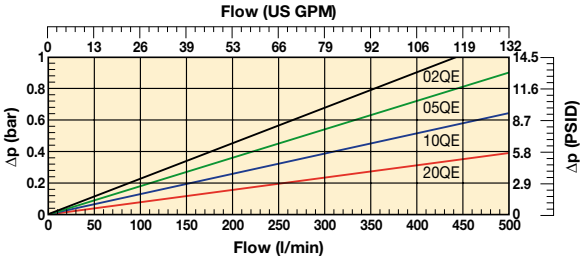

70-1 PRESSURE DROP CURVE
High Collapse FC7005

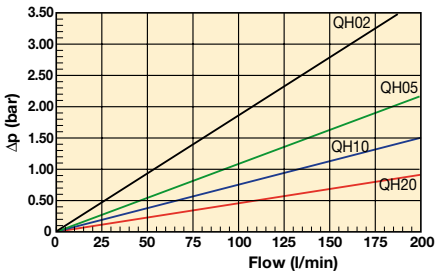

PRESSURE DROP CURVE
70-2 High Collapse FC7006

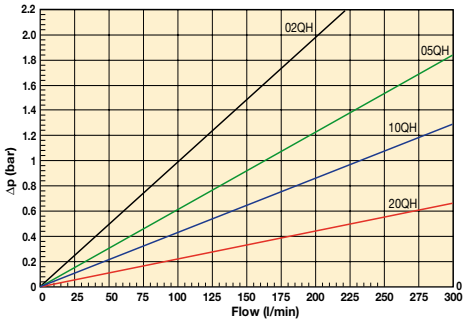

70-3 PRESSURE DROP CURVE
High Collapse FC7007

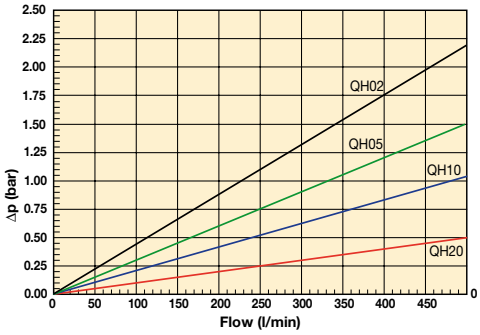

70-4 PRESSURE DROP CURVE
High Collapse FC7008

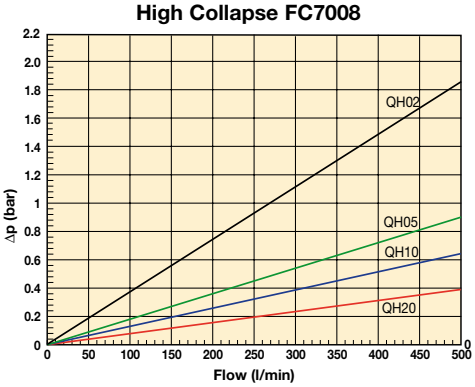

Tel: +45 63 12 83 00 | Email: ps@hymatik.com | www.hymatik.com | Hvidkaervej 27a, DK-5250 Odense SV, Denmark

Ordering Information

Standard products table

Part number	Supersedes	Flow (l/min)	Model number	Element length	Media rating (µ)	Seals	Indicator	Bypass settings	Ports	Replacement elements	Supersedes
70L110QBPKG161	FF7005.Q010.BS35.GL16	150	70L	1	10	Nitrile	Plugged	3.5 bar	G1"	**938773Q**	FC7005.Q010.BK
70L120QBPKG161	FF7005.Q020.BS35.GL16	230	70L	1	20	Nitrile	Plugged	3.5 bar	G1"	**938774Q**	FC7005.Q020.BK
70L210QBPKG201	FF7006.Q010.BS35.GL20	280	70L	2	10	Nitrile	Plugged	3.5 bar	G1¼"	**938777Q**	FC7006.Q010.BK
70L220QBPKG201	FF7006.Q020.BS35.GL20	300	70L	2	20	Nitrile	Plugged	3.5 bar	G1¼"	**938778Q**	FC7006.Q020.BK
70L310QBPKG241	FF7007.Q010.BS35.GL24	400	70L	3	10	Nitrile	Plugged	3.5 bar	G1½"	**938781Q**	FC7007.Q010.BK
70L320QBPKG241	FF7007.Q020.BS35.GL24	430	70L	3	20	Nitrile	Plugged	3.5 bar	G1½"	**938782Q**	FC7007.Q020.BK
70L410QBPKG241	FF7008.Q010.BS35.GL24	430	70L	4	10	Nitrile	Plugged	3.5 bar	G1½"	**938785Q**	FC7008.Q010.BK
70L420QBPKG241	FF7008.Q020.BS35.GL24	450	70L	4	20	Nitrile	Plugged	3.5 bar	G1½"	**938786Q**	FC7008.Q020.BK
70L110QEBPKG161	FF7005.QE10.BS35.GL16	150	70L	1	10	Nitrile	Plugged	3.5 bar	G1"	**938789Q**	FC7005.QE10.BK
70L120QEBPKG161	FF7005.QE20.BS35.GL16	230	70L	1	20	Nitrile	Plugged	3.5 bar	G1"	**938790Q**	FC7005.QE20.BK
70L210QEBPKG201	FF7006.QE10.BS35.GL20	280	70L	2	10	Nitrile	Plugged	3.5 bar	G1¼"	**938793Q**	FC7006.QE10.BK
70L220QEBPKG201	FF7006.QE20.BS35.GL20	300	70L	2	20	Nitrile	Plugged	3.5 bar	G1¼"	**938794Q**	FC7006.QE20.BK
70L310QEBPKG241	FF7007.QE10.BS35.GL24	400	70L	3	10	Nitrile	Plugged	3.5 bar	G1½"	**938797Q**	FC7007.QE10.BK
70L320QEBPKG241	FF7007.QE20.BS35.GL24	430	70L	3	20	Nitrile	Plugged	3.5 bar	G1½"	**938798Q**	FC7007.QE20.BK
70L410QEBPKG241	FF7008.QE10.BS35.GL24	430	70L	4	10	Nitrile	Plugged	3.5 bar	G1½"	**938801Q**	FC7008.QE10.BK
70L420QEBPKG241	FF7008.QE20.BS35.GL24	450	70L	4	20	Nitrile	Plugged	3.5 bar	G1½"	**938802Q**	FC7008.QE20.BK
70T110QBPKG161	FF7005.Q010.BS35.GT16	150	70T	1	10	Nitrile	Plugged	3.5 bar	G1"	**938773Q**	FC7005.Q010.BK
70T120QBPKG161	FF7005.Q020.BS35.GT16	200	70T	1	20	Nitrile	Plugged	3.5 bar	G1"	**938774Q**	FC7005.Q020.BK
70T210QBPKG201	FF7006.Q010.BS35.GT20	260	70T	2	10	Nitrile	Plugged	3.5 bar	G1¼"	**938777Q**	FC7006.Q010.BK
70T220QBPKG201	FF7006.Q020.BS35.GT20	280	70T	2	20	Nitrile	Plugged	3.5 bar	G1¼"	**938778Q**	FC7006.Q020.BK
70T310QBPKG241	FF7007.Q010.BS35.GT24	360	70T	3	10	Nitrile	Plugged	3.5 bar	G1½"	**938781Q**	FC7007.Q010.BK
70T320QBPKG241	FF7007.Q020.BS35.GT24	380	70T	3	20	Nitrile	Plugged	3.5 bar	G1½"	**938782Q**	FC7007.Q020.BK
70T410QBPKG241	FF7008.Q010.BS35.GT24	360	70T	4	10	Nitrile	Plugged	3.5 bar	G1½"	**938785Q**	FC7008.Q010.BK
70T420QBPKG241	FF7008.Q020.BS35.GT24	380	70T	4	20	Nitrile	Plugged	3.5 bar	G1½"	**938786Q**	FC7008.Q020.BK
70T110QEBPKG161	FF7005.QE10.BS35.GT16	150	70T	1	10	Nitrile	Plugged	3.5 bar	G1"	**938789Q**	FC7005.QE10.BK
70T120QEBPKG161	FF7005.QE20.BS35.GT16	200	70T	1	20	Nitrile	Plugged	3.5 bar	G1"	**938790Q**	FC7005.QE20.BK
70T210QEBPKG201	FF7006.QE10.BS35.GT20	260	70T	2	10	Nitrile	Plugged	3.5 bar	G1¼"	**938793Q**	FC7006.QE10.BK
70T220QEBPKG201	FF7006.QE20.BS35.GT20	280	70T	2	20	Nitrile	Plugged	3.5 bar	G1¼"	**938794Q**	FC7006.QE20.BK
70T310QEBPKG241	FF7007.QE10.BS35.GT24	360	70T	3	10	Nitrile	Plugged	3.5 bar	G1½"	**938797Q**	FC7007.QE10.BK
70T320QEBPKG241	FF7007.QE20.BS35.GT24	380	70T	3	20	Nitrile	Plugged	3.5 bar	G1½"	**938798Q**	FC7007.QE20.BK
70T410QEBPKG241	FF7008.QE10.BS35.GT24	360	70T	4	10	Nitrile	Plugged	3.5 bar	G1½"	**938801Q**	FC7008.QE10.BK
70T420QEBPKG241	FF7008.QE20.BS35.GT24	380	70T	4	20	Nitrile	Plugged	3.5 bar	G1½"	**938802Q**	FC7008.QE20.BK

Note: Filter assemblies ordered from the product configurator on next page are on extended lead times. Where possible, please make your selection from the table above.

70/70 Eco Series Seal Kits	
Part Number	**Description**
911045021	NITRILE SEAL KIT 70/70 Eco
911045051	FLUOROELASTOMER SEAL KIT 70/70 Eco

Tel: +45 63 12 83 00 | Email: ps@hymatik.com | www.hymatik.com | Hvidkaervej 27a, DK-5250 Odense SV, Denmark

70/70 Eco Series

High Pressure Filters

Ordering Information (cont.)

Product configurator

Box 1	Box 2	Box 3	Box 4	Box 5	Box 6	Box 7	Box 8
70L	**3**	**10Q**	**B**	**M3**	**K**	**G24**	**1**

Box 1

Code	
Model	**Code**
High pressure filter with L-port	**70L**
High pressure filter with T-port	**70T**
High pressure filter with side manifold mounting	70B

Box 2

Filter type	
Length	**Code**
Length 1	**1**
Length 2	**2**
Length 3	**3**
Length 4	**4**

Box 3

Degree of filtration				
Element media	**Glass fibre**			
	Media code			
Microglass III element	**02Q**	**05Q**	**10Q**	**20Q**
Ecoglass III element	**02QE**	**05QE**	**10QE**	**20QE**
High collapse element	02QH	05QH	10QH	20QH

Note: When using Ecoglass III elements reusable Eco-adaptor is required. Consult Parker.

Box 4

Seal type	
Seal material	**Code**
Nitrile	**B**
Fluoroelastomer	V

Box 5

Indicator	
	Code
Plugged with steel plug	**P**
Visual indicator	**M3**
Electrical indicator	**T1**
Electronic 4 LED, PNP, N.O.	F1
Electronic 4 LED, NPN, N.O.	F2
Electronic 4 LED, PNP, N.C.	F3
Electronic 4 LED, NPN, N.C.	F4

Box 6

Bypass and indicator settings			
Bypass valve	**Indicator**	**Code**	
3.5 bar	2.5 bar	**K**	
No bypass	7.0 bar	N	+ Box 8: code 2
No bypass	No indicator (P)	X	+ Box 8: code 2

When filter includes a bypass valve but not an indicator, code denotes bypass setting.

Box 7

Filter connection					
Connections	**Code**	Length 1	Length 2	Length 3	Length 4
Thread G 1	**G16**	**S**	**S**	x	x
Thread G 1 ¼	**G20**	**S**	**S**	**S**	**S**
Thread G 1 ½	**G24**	x	**S**	**S**	**S**
SAE flange 1 ¼" 3000-M	R20	x	x	x	x
SAE flange 1 ½" 3000-M	R24	x	x	x	x
SAE flange 1 ¼" 6000-M	H20	x	x	x	x
SAE flange 1 ½" 6000-M	H24	x	x	x	x
Side manifold (70B only)	X32	x	x	x	x

Availability: **S** = standard product
x = non-standard, ask for availability

Box 8

Options	
Options	**Code**
Standard	**1**
No bypass	2
Drain port	4
70T: side indicator ports	6
70T: options 2 + 6	8

Options 6 and 8: in 70T model there is an option for 2 x indicator ports on filter outlet flange (standard indicator port not machined)
P: both side indicator ports plugged with steel plug
M3 or other indicator chosen: right side (in flow direction) port plugged with a plastic plug, left with a steel plug

Nominal flow (l/min) at viscosity 30 cSt

Filter length	Media	G16 T-port	G16 L-port & G20 T-port	G20 L-port & Side manifold	G24 T-port	G24 L-port
Length 1	02Q/02QE	80	80	80	80	80
	05Q/05QE	120	120	120	120	120
	10Q/10QE	150	150	150	150	150
	20Q/20QE	200	230	230	230	230
Length 2	02Q/02QE	160	160	160	160	160
	05Q/05QE	180	200	200	200	200
	10Q/10QE	220	260	280	300	320
	20Q/20QE	240	280	300	330	350
Length 3	02Q/02QE	200	220	220	220	220
	05Q/05QE	220	250	280	280	280
	10Q/10QE	240	280	300	350	400
	20Q/20QE	250	300	320	380	430
Length 4	02Q/02QE	220	250	270	270	270
	05Q/05QE	230	260	300	330	330
	10Q/10QE	250	280	330	360	430
	20Q/20QE	260	300	350	380	450

Replacement elements with nitrile seals

Media	Length 1	Length 2	Length 3	Length 4
02Q	**938771Q**	**938775Q**	**938779Q**	**938783Q**
05Q	**938772Q**	**938776Q**	**938780Q**	**938784Q**
10Q	**938773Q**	**938777Q**	**938781Q**	**938785Q**
20Q	**938774Q**	**938778Q**	**938782Q**	**938786Q**
02QE	**938787Q**	**938791Q**	**938795Q**	**938799Q**
05QE	**938788Q**	**938792Q**	**938796Q**	**938800Q**
10QE	**938789Q**	**938793Q**	**938797Q**	**938801Q**
20QE	**938790Q**	**938794Q**	**938798Q**	**938802Q**
02QH	938803Q	938807Q	938811Q	938815Q
05QH	938804Q	938808Q	938812Q	938816Q
10QH	938805Q	938809Q	938813Q	938817Q
20QH	938806Q	938810Q	938814Q	938818Q

Highlights Key (Denotes part number availability)

123	Item is standard
123	Item is standard green option
123	Item is semi standard
123	Item is non standard

Degree of filtration						Code		
Average filtration beta ratio ß (ISO 16889) / particle size µm [c]								
ßx(c)=2	**ßx(c)=10**	**ßx(c)=75**	**ßx(c)=100**	**ßx(c)=200**	**ßx(c)=1000**			
% efficiency, based on the above beta ratio (ßx)						Disposable Microglass III	Metal free Ecoglass III	High collapse element
50.0%	**90.0%**	**98.7%**	**99.0%**	**99.5%**	**99.9%**			
N/A	N/A	N/A	N/A	N/A	4.5	**02Q**	**02QE**	02QH
N/A	N/A	4.5	5	6	7	**05Q**	**05QE**	05QH
N/A	6	8.5	9	10	12	**10Q**	**10QE**	10QH
6	11	17	18	20	22	**20Q**	**20QE**	20QH

Note 1: Part numbers featured with bold highlighted codes will ensure a 'standard' product selection.
Note 2: Alternate displayed part number selection will require you to contact Parker Filtration for availability.

22PD/32PD Series

High Pressure Duplex Filters
Max 260 l/min - 210 bar



A duplex design with a wide application capability

Designed to offer continuous operation during element change

The 22PD/32PD Series utilizes a duplex design with integrated balancing valve and vent ports. Microglass III glassfibre media is standard. Maximum pressure 210 bar. Maximum flow 260 l/min. A changeover valve operates on the upstream side of the filter, ensuring a contamination free system.



Contact Information:

Parker Hannifin
Hydraulic Filter Division Europe

European Product Information Centre
Freephone: 00800 27 27 5374
(from AT, BE, CH, CZ, DE, EE, ES, FI, FR, IE, IT, PT, SE, SK, UK)
filtrationinfo@parker.com

www.parker.com/hfde

Product Features:

- 22PD/32PD utilizes a duplex design with integrated balancing valve and vent ports.
- Microglass III glassfibre media is standard.
- Maximum pressure 210 bar. Maximum flow 260 l/min.
- Designed to offer continuous operation during element change.

Tel: +45 63 12 83 00 | Email: ps@hymatik.com | www.hymatik.com | Hvidkaervej 27a, DK-5250 Odense SV, Denmark

22PD/32PD Series

High Pressure Duplex Filters

Features & Benefits

Features	Advantages	Benefits
Duplex design	Element service possible during operation	Allows to keep machine running with full contamination protection
Integrated balancing valve	No external piping required	Safety and reliability
Vent ports	Purges all trapped air in filter	Get the maximum performance from the elements
		Prevents a "flabby" system
Microglass III replacement elements	Multi-layered design produced high capacity and efficiency	Great performance value
		Reliable performance throughout element life
	Wire support reduces pleat bunching, keeps performance consistent	Reduces downtime, maximises element life
Visual, electrical and electronic indicators available	Check element condition at a glance	Optimises element life, prevents bypassing
	Right style for the application	Matches your system electrical connections

Typical Applications

- Ship steering systems
- Continuous operation industrial systems
- High flow flushing systems



The Parker Filtration 22PD/32PD Series High Pressure Duplex Filters.

Specially designed to offer continuous operation, even during element change.

A changeover valve operates on the upstream side of the filter, ensuring a contamination free system.

Tel: +45 63 12 83 00 | Email: ps@hymatik.com | www.hymatik.com | Hvidkaervej 27a, DK-5250 Odense SV, Denmark

Specification

Pressure ratings:
Maximum allowable operating pressure 210 bar.
Filter housing pressure pulse fatigue tested: 10^6 cycles 210 bar.

Connections:
Inlet and outlet connections are threaded.

Connection style	*Model* 22PD	32PD
BSPF(G)	1"	1¼"
Flange SAE 3000-M	1¼"	1½"

*3000-M is a SAE style with appropriate metric fixing threads.

Filter housing:
Head material cast iron (GSI).
Bowl material steel.

Seal material:
Nitrile or Fluoroelastomer.

Operating temperature range:
Seal material Nitrile: -40 °C to +100 °C.
Seal material Fluoroelastomer: -20 °C to +120 °C.

Bypass valve:
Opening pressure 3.5 bar

Filter element:
Degree of filtration:
Determined by multipass-test according to ISO 16889.

Flow fatigue characteristics:
Filter media is supported so that the optimal fatigue life is achieved (ISO 3724).

Microglass III:
Supported with epoxy coated metal wire mesh, end cap material reinforced composite and metal inner core. Collapse rating 20 bar (ISO 2941).

High collapse elements:
(to be used when no bypass function in filter housing).
Microglass III media supported with epoxy coated metal wire mesh on upstream and stainless steel on downstream, end cap material steel. Strong metal inner core. Collapse rating 210 bar (ISO 2941).

Indicator options:
Indicating differential pressure: 2.5 ± 0.3 bar.
- visual M3.
- electrical T1.
- electronic F1(PNP).
- electronic F2(NPN).

For indicator details see catalogue section 6.

Weights (kg):

Model	*Length 1*	*Length 2*
22PD	22	27
32PD	44	50

Fluid compatibility:
Suitable for use with mineral and vegetable oils, and some synthetic oils. For other fluids, please consult Parker Filtration.

Dimensions mm (inches)

Model	A	B	C	D	E	F	G	H	I	J	K	L	M	N
22PD-1	240	35	92	18	55	150	32	96	192	60	30	59	30.75Ø	236 (9.29)
22-PD-2	(9.45)	(1.38)	(3.62)	(0.71)	(2.16)	(5.91)	(2.21)	(3.70)	(7.56)	(2.36)	(1.18)	(2.32)		345 (13.58)
32PD-1	306	42	130	20	78	170	33	120	240	75	36	70	38Ø	317 (12.48)
32PD-2	(12.05)	(1.65)	(5.12)	(0.79)	(3.07)	(6.69)	(2.28)	(4.72)	(9.45)	(2.95)	(1.42)	(2.75)		437 (17.20)

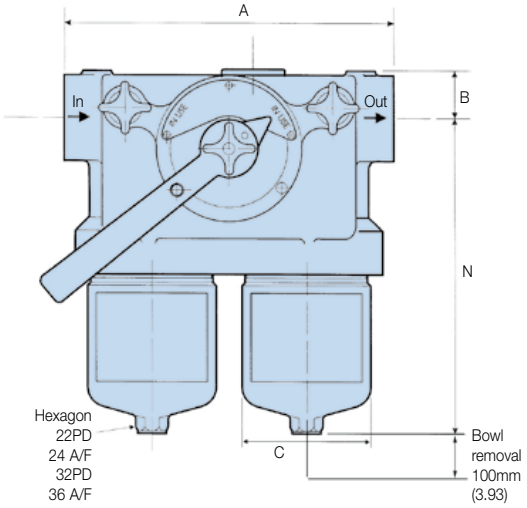

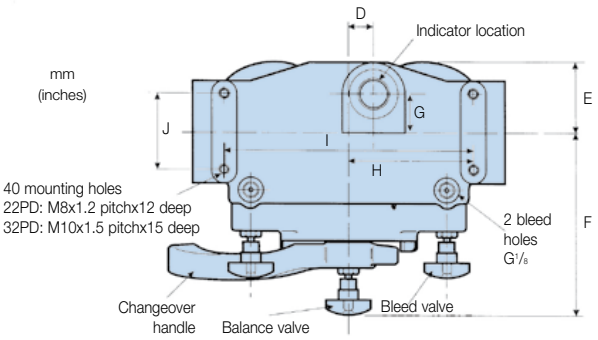

Flange face detail

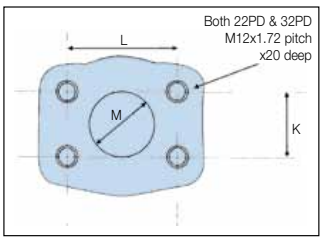

Tel: +45 63 12 83 00 | Email: ps@hymatik.com | www.hymatik.com | Hvidkaervej 27a, DK-5250 Odense SV, Denmark

22PD/32PD Series

High Pressure Duplex Filters

Pressure Drop Curves

The recommended level of initial pressure drop is max. 1.2 bar.
If the medium used has a viscosity different from 30 cSt, pressure drop over the filter can be estimated as follows:
Δp = (Δp30 x viscosity of medium used) / 30 cSt.
The total Δp = housing Δph + (element Δpe x working viscosity/30).

22PD/32PD Bypass Valve

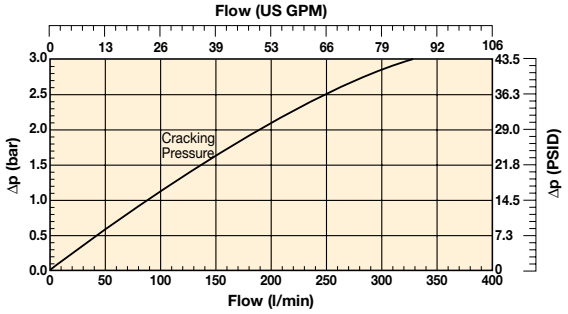

22PD/32PD Empty Housing

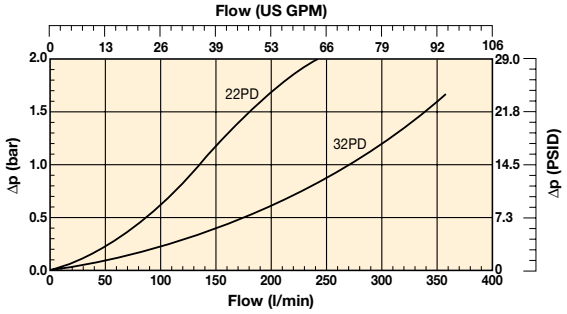

22PD-1 Elements

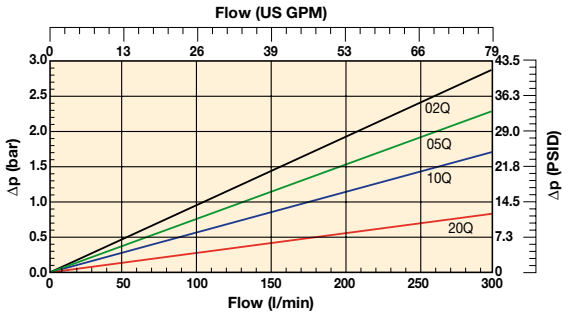

22PD-2 Elements

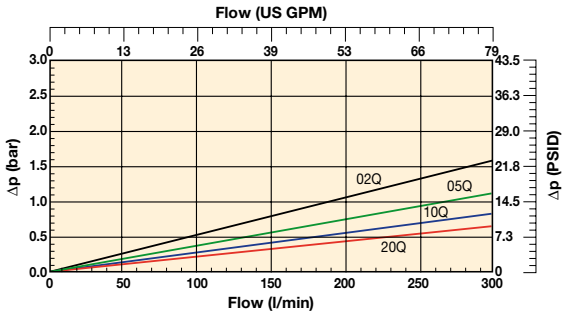

32PD-1 Elements

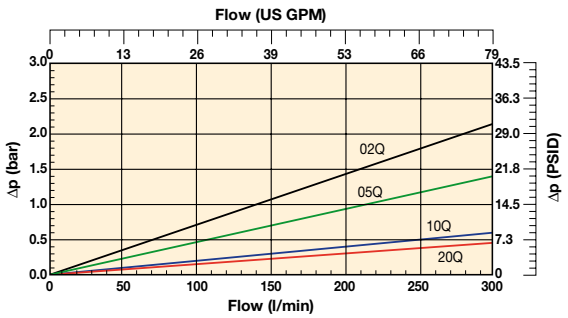

32PD-2 Elements

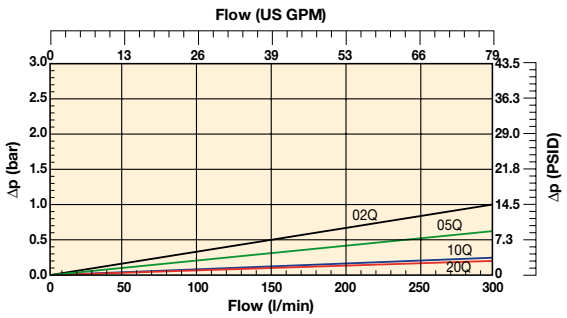

Tel: +45 63 12 83 00 | Email: ps@hymatik.com | www.hymatik.com | Hvidkaervej 27a, DK-5250 Odense SV, Denmark

22PD-1 High Collapse Elements

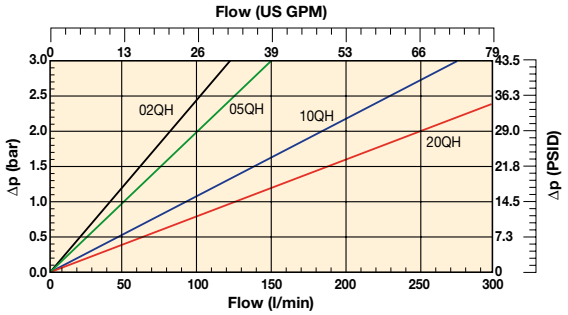

22PD-2 High Collapse Elements

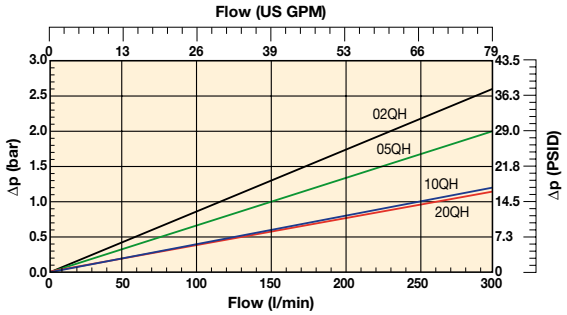

32PD-1 High Collapse Elements

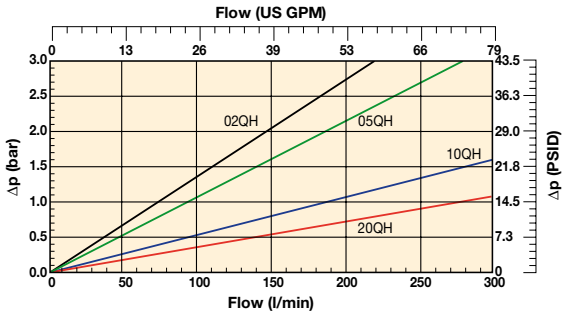

32PD-2 High Collapse Elements

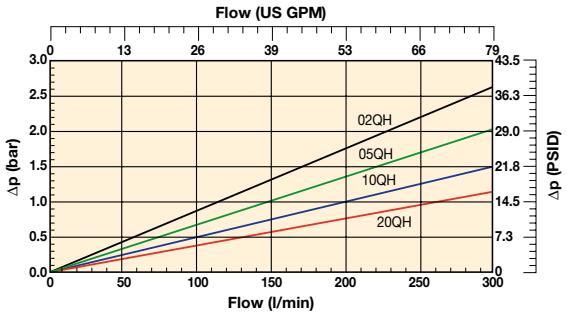

Ordering Information

Standard products table

Part number	Supersedes	Flow (l/min)	Model number	Element length	Media rating (µ)	Seals	Indicator	Bypass settings	Ports	Replacement elements
22PD210QBM3KG161	0-22-PD-2-10Q-V-50-C-1	120	22PD	Length 2	10	Nitrile	Visual	3.5 bar	G1"	**G01315Q**
22PD210QBT1KG161	0-22-PD-2-10Q-TW3-50-C-1	120	22PD	Length 2	10	Nitrile	Electrical	3.5 bar	G1"	**G01315Q**
22PD220QBM3KG161	0-22-PD-2-20Q-V-50-C-1	140	22PD	Length 2	20	Nitrile	Visual	3.5 bar	G1"	**G01938Q**
22PD220QBT1KG161	0-22-PD-2-20Q-TW3-50-C-1	140	22PD	Length 2	20	Nitrile	Electrical	3.5 bar	G1"	**G01938Q**
32PD210QBM3KG201	0-32-PD-2-10Q-V-50-D-1	240	32PD	Length 2	10	Nitrile	Visual	3.5 bar	G1¼"	**G01098Q**
32PD210QBT1KG201	0-32-PD-2-10Q-TW3-50-D-1	240	32PD	Length 2	10	Nitrile	Electrical	3.5 bar	G1¼"	**G01098Q**
32PD220QBM3KG201	0-32-PD-2-20Q-V-50-D-1	260	32PD	Length 2	20	Nitrile	Visual	3.5 bar	G1¼"	**G01954Q**
32PD220QBT1KG201	0-32-PD-2-20Q-TW3-50-D-1	260	32PD	Length 2	20	Nitrile	Electrical	3.5 bar	G1¼"	**G01954Q**

Note: Filter assemblies ordered from the product configurator on the next page are on extended lead times. Where possible, please make your selection from the table above.

22PD/32PD Series

High Pressure Duplex Filters

Ordering Information (cont.)

Product configurator

Box 1	Box 2	Box 3	Box 4	Box 5	Box 6	Box 7	Box 8
22PD	**2**	**10Q**	**B**	**M3**	**K**	**G16**	**1**

Box 1

Code	
Model	**Code**
Small high pressure duplex filter	**22PD**
Large high pressure duplex filter	**32PD**

Box 2

Filter type	
Length	**Code**
Length 1	**1**
Length 2	**2**

Box 3

Degree of filtration				
Element media	**Glass fibre**			
	Media code			
Microglass III element	02Q	05Q	**10Q**	**20Q**
High collapse element	02QH	05QH	10QH	20QH

Box 4

Seal type	
Seal material	**Code**
Nitrile	**B**
Fluoroelastomer	V

Box 5

Indicator	
	Code
Visual indicator	**M3**
Electrical indicator	**T1**
Plugged with steel plug	P
No indicator port	N
Electronic 4 LED, PNP, N.O.	F1
Electronic 4 LED, NPN, N.O.	F2
Electronic 4 LED, PNP, N.C.	F3
Electronic 4 LED, NPN, N.C.	F4

Box 6

Bypass and indicator settings			
Bypass valve	**Indicator**	**Code**	
3.5 bar	2.5 bar	**K**	
No bypass	5.0 bar	M	+ Box 8: code 2
No bypass	No indicator	X	+ Box 8: code 2

When filter includes a bypass valve but not an indicator, code denotes bypass setting.

Box 7

Filter connection	
Ports	**Code**
22PD: Thread G 1	**G16**
SAE flange 1 ¼" 3000-M	R20
32PD: Thread G 1 ¼	**G20**
SAE flange 1 ½" 3000-M	R24

Box 8

Options	
Options	**Code**
Standard	**1**
No bypass	2
ATEX certified* (Category 2, non-electrical equipment)	EX

Note 1*: For ATEX classified filters add EX after the code.
ATEX certified filters with electrical indicator are available on request.
Visual indicators are classified as Category 2, non electrical equipment.
Filter assemblies with EX code will be supplied with a dedicated name plate.
Pls consult Parker Filtration for any questions related to the classification of our products.

Replacement elements with nitrile seals				
Media	22PD-1	22PD-2	32PD-1	32PD-2
02Q	**G01282Q**	**G01316Q**	**G01069Q**	**G01099Q**
05Q	**G02721Q**	**G02724Q**	**G02567Q**	**G02727Q**
10Q	**G01281Q**	**G01315Q**	**G01068Q**	**G01098Q**
20Q	**G01930Q**	**G01938Q**	**G01946Q**	**G01954Q**
02QH	G01442Q	G01448Q	G01454Q	G01460Q
05QH	G03737Q	G03738Q	G03739Q	G03740Q
10QH	G01441Q	G01447Q	G01453Q	G01459Q
20QH	G01932Q	G01940Q	G01948Q	G01956Q

Nominal flow (l/min) at viscosity 30 cSt				
Filter model	02Q	05Q	10Q	20Q
22PD-1	70	80	100	120
22PD-2	100	110	120	140
32PD-1	100	150	210	230
32PD-2	180	210	240	260

Seal kits		
Filter model	Nitrile	Fluoroelastomer
22PD	S04233	S04234
32PD	S03520	S03522

Replacement elements with fluoroelastomer seals				
Media	22PD-1	22PD-2	32PD-1	32PD-2
02Q	G01302Q	G01336Q	G01089Q	G01119Q
05Q	G02723Q	G02726Q	G02569Q	G02729Q
10Q	G01301Q	G01335Q	G01088Q	G01118Q
20Q	G01934Q	G01942Q	G01950Q	G01958Q
02QH	G01446Q	G01452Q	G01458Q	G01464Q
05QH	G04235Q	G04236Q	G04237Q	G04238Q
10QH	G01445Q	G01451Q	G01457Q	G01463Q
20QH	G01935Q	G01943Q	G01951Q	G01959Q

Highlights Key (Denotes part number availability)

123	Item is standard
123	Item is standard green option
123	Item is semi standard
123	Item is non standard

Degree of filtration						Code	
Average filtration beta ratio ß (ISO 16889) / particle size µm [c]							
ßx(c)=2	**ßx(c)=10**	**ßx(c)=75**	**ßx(c)=100**	**ßx(c)=200**	**ßx(c)=1000**		
% efficiency, based on the above beta ratio (ßx)						Disposable Microglass III	High collapse element
50.0%	**90.0%**	**98.7%**	**99.0%**	**99.5%**	**99.9%**		
N/A	N/A	N/A	N/A	N/A	4.5	**02Q**	02QH
N/A	N/A	4.5	5	6	7	**05Q**	05QH
N/A	6	8.5	9	10	12	**10Q**	10QH
6	11	17	18	20	22	**20Q**	20QH

Note 1: Part numbers featured with bold highlighted codes will ensure a 'standard' product selection.
Note 2: Alternate displayed part number selection will require you to contact Parker Filtration for availability.

Parker Hannifin
Hydraulic Filter Division Europe
FDHB500UK/22PD/32PD

Indicators Series

FMU Δp-Indicators and Pressure Indicators
Max 420 bar



Measuring critical system parameters is essential

Reliable and continuous control of the filter in all applications

The FMU range of filter condition indicators are designed for use on a wide range of Parker filters and competitive interchange filters.
Maximum pressure 420 bar.
A comprehensive range of high quality indicators for mobile, industrial and marine applications.



Contact Information:

Parker Hannifin
Hydraulic Filter Division Europe

European Product Information Centre
Freephone: 00800 27 27 5374
(from AT, BE, CH, CZ, DE, EE, ES, FI, FR, IE, IT, PT, SE, SK, UK)
filtrationinfo@parker.com

www.parker.com/hfde

Product Features:

- The FMU range of filter condition indicators, designed for use on a wide range of Parker filters.
- Accurate visual, electronic or electrical filter condition feedback.
- Maximum pressure 420 bar.
- Mobile, industrial and marine applications.

Indicators Series

FMU Δp-Indicators and Pressure Indicators

Features & Benefits

Features	Advantages	Benefits
Indicators fatigue tested to full pressure rating	Reliable indicators for heavy duty applications	Reliable and continuous control of the filter in all applications
Cartridge screw-in type indicators	Easy mounting	Reliable sealing, no leakage
Visual, electrical and electronic indicators available	Check element condition at a glance	Optimises element life, prevents bypassing
	Right style for the application	Match your system's electrical connections
Several indication settings	Optimized for each bypass setting	Right indicator for application
Visual indicators	Local monitoring of the element condition	Reliable low cost indicator
Electrical indicator with change-over switch	Option of Normally Open (N.0.) and Normally Closed (N.C.) function	Approved for low voltage and high voltage use including machine control systems and PLC's
Electrical indicator with 4 LEDs	Thermal lock-out	No false alarm because of low temperature oil
	Visual early warning with yellow LED	Allows time to schedule element change
	Pre-alarm with yellow LED and wired output	Indicates upcoming element change
	Alarm with red LED and wired output	Clear indication for element change
Programmable and ATEX certified indicators available	Right indicators for special applications	Improved machine surveillance

Typical Applications

- Industrial equipment
- Mobile equipment
- Marine/offshore applications



The Parker FMU Series Differential Pressure Indicators

The FMU range of filter condition indicators, are designed for use on a wide range of Parker filters and suitable for competitive interchange (consult Parker Filtration for details).

Ideal for giving accurate visual, electronic or electrical feedback of filter element condition, in order to facilitate effective maintenance and ensuring hydraulic systems, marine/mobile or industrial are protected from particulate contamination.

Specification

Maximum operating pressure:
420 bar (250 bar for aluminium).

Maximum differential pressure:
210 bar.

Working temperature range:
-20°C to +85°C with fluoroelastomer seals, -40°C to +85°C with nitrile and EPDM seals.

Material of housing:
Brass, aluminium or stainless steel.

Seals:
Fluoroelastomer, Nitrile or EPDM.

Mounting torque:
max. 75 Nm
(max. 50 Nm for aluminium indicator body & filter housing)

The differential pressure values of standard indicator models:
1.2 bar ± 0.2
1.5 bar ± 0.2
2.5 bar ± 0.3
5.0 bar ± 0.5
7.0 bar ± 0.5
8.5 bar ± 0.5
(Indicators for other differential pressure values are optional).

FMU Δp – Indicators are typically used with the following filters:		
Heavy duty filters: GS, SF1040, DF2035, DF2050, DFH2060, DF2070, DF2089, DF2110 Note: FMU-Block is required to connect indicator to filter.	**U12H**	**1.0 and 1.5 bar**
Medium pressure filters series: 45M. High pressure filters series: 70L, 70T, 70B, 5000, 7100 and 7200. Heavy duty filter series: 130M, DF2145.	**U12H**	**2.5 bar**
High pressure filters without bypass valve: 70L, 70T, 70B, 7100 and 7200.	**U12H**	**7.0 bar**
Medium and low pressure filter series; Note for PD Range only 2.5 bar indicators are available: 15CN, 40CN, 80CN, 22PD, 32PD, 15P, 30P, 40RF, 50RF, IL8, 12M, 22M, 16P, 26P, 36P. Also heavy duty filter DF40.	**U14M**	**1.2 and 2.5 bar**
High pressure filters 18P, 28P, 38P, FDA, FDB	**U14H**	**2.5 and 5.0 bar**

Indicators Series

FMU Δp-Indicators and Pressure Indicators

FMUT Electrical

Rated voltage	Non-inductive load (A)				Inductive load (A)				Inrush current (A)	
	Resistive load		Lamp load		Inductive load		Motor load			
	N.C.	N.O.	N.C.	N.O.	N.C.	N.O.	N.C.	N.O.	N.C.	N.O.
125VAC	5		1.5	0.7	3		2.5	1.3	20 max.	10 max.
250VAC	3		1.0	0.5	2		1.5	0.8		
8VDC	5		2		5	4	3			
14VDC	5		2		4	4	3			
30VDC	4		2		3	3	3			
125VDC	0.4		0.05		0.4	0.4	0.05			
250VDC	0.2		0.03		0.2	0.2	0.03			

Enclosure class	IP65
Electrical connector	DIN 43650
Overvoltage category	II (EN61010-1)

Contact configuration

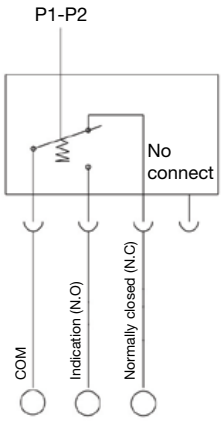

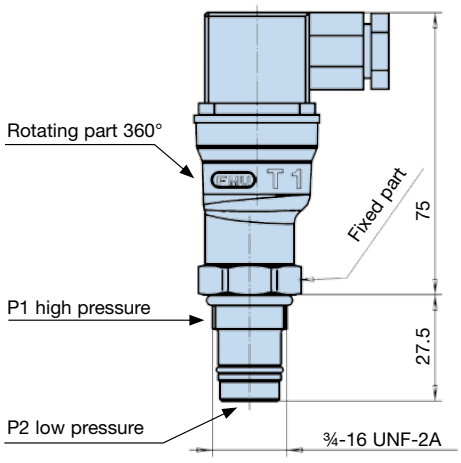

FMUM3 Visual Auto Reset/FMUM1 Visual Manual Reset

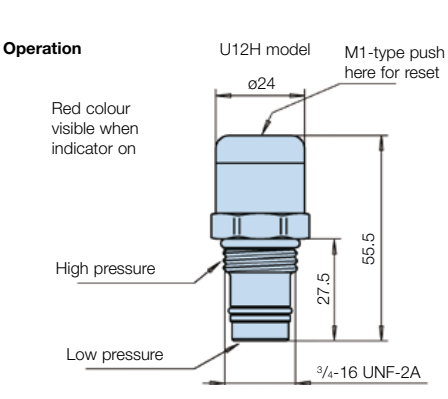

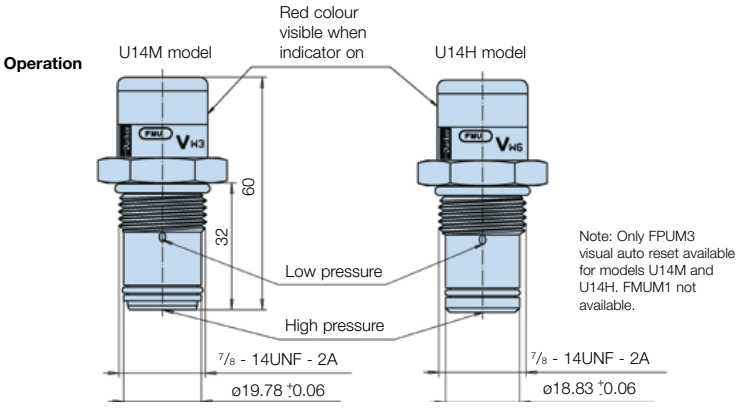

Tel: +45 63 12 83 00 | Email: ps@hymatik.com | www.hymatik.com | Hvidkaervej 27a, DK-5250 Odense SV, Denmark

FMUF Electronic

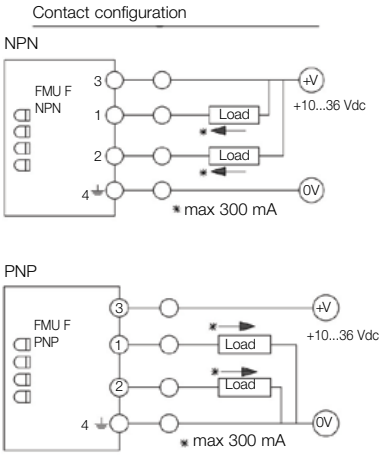

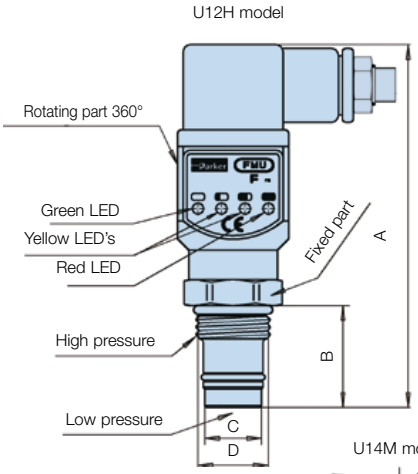

	U12H	U14M	U14H	
A		98	105	105
B		27.5	32	32
C	±0.05	Ø16.2 ± 0.06	Ø19.78 ± 0.06	Ø18.83
D	UNF-2A	3/4-16 UNF-2A	7/8-14 UNF-2A	7/8-14

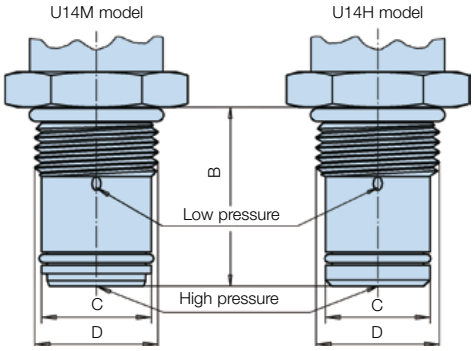

Thermal lock-out (standard setting +20°C)

- Indicator operates only when temperature is above setting.
- Green LED is blinking if temperature is lower. (not in U12H)

Ind. press. setting	LED status				Output
	G	Y1	Y2	R	
< 50 %	⊗				-
50 %	⊗	⊗			-
75 %	⊗	⊗	⊗		2 active
100 %	⊗	⊗	⊗	⊗	1 active

Enclosure class	IP65
Electrical connector	DIN 43650, cable connection PG9 or optinally M12 4-pin
Input supply voltage	+10 to 36 Vdc
*Indication output	max. 300 mA/36 Vdc
Output type:	N.O. or N.C./NPN or PNP

Note: Do not connect output terminals 1 or 2 directly (without load) to power supply terminals, because this will damage the equipment.

Safety feature: The 250 bar U14M indicator does not fit into the U14H cavity, which is used in 420 bar filters

FMUL1 Programmable



Dimensions: see FMUF electronic Δp-indicator

Programmable Δp-indicator

All settings adjustable (settings made via PC) Connections cable and software available from Parker

- 4 LEDs giving visual indication:
  - Green (G): Power ON
  - Yellow 1 (Y1): Pre-alarm 1 (presetting 50%)
  - Yellow 2 (Y2): Pre-alarm 2 (presetting 75%)
  - Red (R): Indication (presetting 100%)
- two independently programmable indication outputs
  - can be set independently from each other and LED setting
  - output type: NPN or PNP
  - switching type: N.O. or N.C.
- setting range: 0,5 ... 10 bar
- thermal lock-out range: 0 ... 100°C
- includes a microchip with memory logs
  - number of alarms: max 65535
  - time indication on (output 1): max 1092 hours
  - time power on (running hours): max 7 1/2 years
  - upload and reset via PC

Tel: +45 63 12 83 00 | Email: ps@hymatik.com | www.hymatik.com | Hvidkaervej 27a, DK-5250 Odense SV, Denmark

Indicators Series

FMU Δp-Indicators and Pressure Indicators

Ordering Information

Product configurator

Box 1	Box 2	Box 3	Box 4	Box 5	Box 6	Box 7	Box 8
FMU	**M3**	**K**	**V**	**M**	**U14**	**H**	

Box 1

Code	
Indicator series	**Code**
Filter monitoring unit	**FMU**

Box 2

Filter type	
Differential pressure indicator	**Code**
Visual manual reset	M1*
Visual autoreset	**M3**
Electrical	**T1**
Electronic 4 LED, PNP, N.O.	**F1**
Electronic 4 LED, NPN, N.O.	**F2**
Electronic 4 LED, PNP, N.C.	F3
Electronic 4 LED, NPN, N.C.	F4
Programmable with memory logs	L1
Ex version	X1

*Available only with U12 thread

Box 3

Indicator setting		
Indicator setting	**Standard**	**Code**
1.0 bar (14 psi)	c	**F**
1.2 bar (17 psi)	a	**G**
1.5 bar (21 psi)	c	**H**
2.5 bar (35 psi)	a, b, c	**K**
5.0 bar (70 psi)	b	**M**
7.0 bar (98 psi)	c	**N**
8.5 bar (125 psi)		P

Standard settings:
a: U14M, former -W3
b: U14H, former -W6
c: U12H, former -F6

Box 4

Seal type	
Seal material	**Code**
Nitrile	B
Fluorelastomer	**V**
EPDM	E
Neopren	N

Box 5

Indicator body	
Indicator body	**Code**
Aluminium (Box 7, code M)	A
Brass (Box 7, code M and H)	**M**
Stainless steel	R

Box 6

Thread connection	
Thread connection	**Code**
3/4" - 16UNF-2A	**U12**
7/8" - 14UNF-2A	**U14**
SAE 8	**SO8**

Box 7 **A - class products**

Max Pressure	
Max pressure	**Code**
CN, 15/30P & 22/32 PD Series	**M**
45M, 130M, 70P & 18/28/38P	**H**
EPF, EMDPF	**Omit**

Box 8

Options	
Options	**Code**
Standard	**omit**
Other options	factory supplied

Note: F and L type indicators. Non-standard thermal lockout settings shown here.

FMUX ATEX Approved Electronic

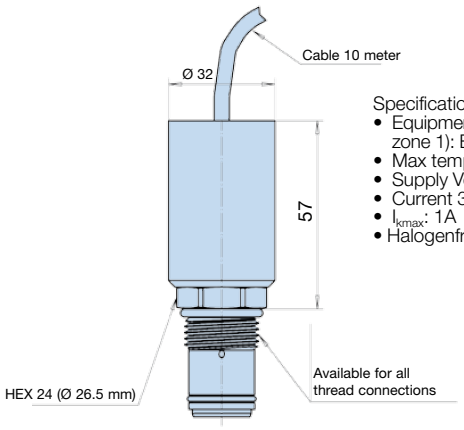

Specification:
- Equipment category 2 (for zone 1): Ex II 2 GD Eex m II T6
- Max temperature 85°C
- Supply Voltage: 10 – 36 Vdc
- Current 300 mA (max)
- I_{kmax}: 1A
- Halogenfree cable

FMUX Indicator Information (see left)
Indicator type X1: ATEX Δp-indicator
Electronic indicator accordant with ATEX 94/9/EC directive:
(Ex) II 2 GD Eex mII T6.
Degree of protection IP66. X1 refers to PNP, N.O.
Other output options X2, X3 and X4 are available by request.
(Refer to electronic F Type).

L1 Indicator Information (see previous page)
Connection cable + software for programmable indicator L1
Connection cable for PC serial connection and software for indicator settings and utilising memory logs.
Ordering Code: 905075030

General Information

Seal kits (fluoroelastomer)	**Ordering code**
Indicators with thread connection U12H (former -F6) + S08	**911045078**
Indicators with thread connection U14M (former -W3)	**911045086**
Indicators with thread connection U14H (former -W6)	**911045087**

Note 1: Part numbers featured with bold highlighted codes will ensure a 'standard' product selection.
Note 2: Alternate displayed part number selection will require you to contact Parker Filtration for availability.

Pressure Indicators for Low Pressure Filters

ETF Filter

Visual pressure indicator
Code G2
mm (inches)

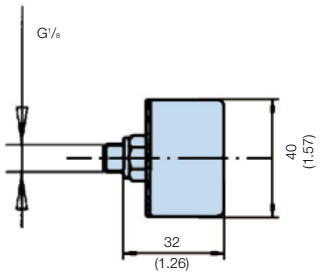

48 Vdc electrical indicator 1.0 bar
Code S2/S3
mm (inches)

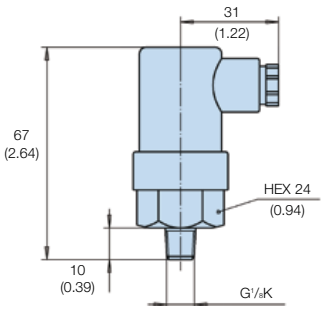

250 VAC electrical indicator 1.0 bar
Code S4
mm (inches)

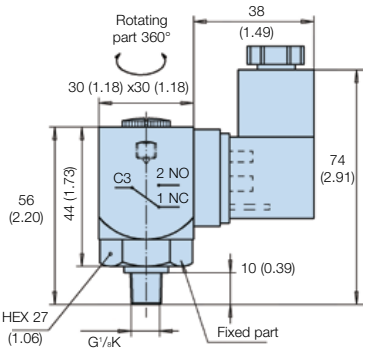

Option	Description	Connection/Voltage	Wiring	Part number
G2	Visual indicator 1.0 bar	N/A	N/A	FMUG2EBPG02L
S2/S3	Electrical indicator 1.0 bar	42 Vdc max	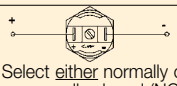 Select either normally open (NO) or normally closed (NC)	FMUS2FBMG02L (NO switch) or FMUS3FBMG02L (NC switch)
S4	Electrical indicator 1.0 bar	250 Vac max	 1 NC, 2 NO, 3 C	FMUS4FFAG02L

Normally open contacts



Normally closed contacts



Indicator PS NO or NC pressure switch

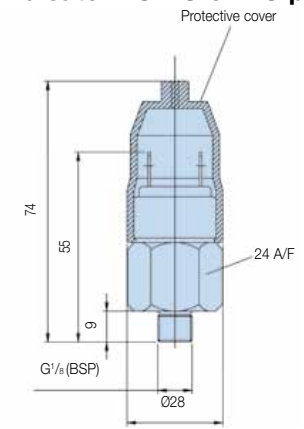

Normally open contacts



Normally closed contacts



Specifications	
Elec.rating	42V / 2A
Thread connection	G1/8
Elec.connection	AMP terminal 6.3x0.8
Protection	IP65 (terminal IP00)
Switch type	NO or NC
Code	FMUS2EBMG02L (NO switch)
	FMUS3EBMG02L (NC switch)

Visual indicator	1.2 bar
G1/8: code	FMUG2EBPG02L

Tel: +45 63 12 83 00 | Email: ps@hymatik.com | www.hymatik.com | Hvidkaervej 27a, DK-5250 Odense SV, Denmark

GS Series

Medium Pressure Filters
Max. 350 l/min. - 40 bar



In-line peace of mind

Three different housing sizes and several media options allow a wide range of applications. Cast iron housings are operable up to 40 bars. Pre-filtration with magnets is available as well as several connection options.



Contact Information:

Parker Hannifin
Hydraulic Filter Division Europe

European Product Information Centre
Freephone: 00800 27 27 5374
(from AT, BE, CH, CZ, DE, EE, ES, FI, FR, IE, IT, PT, SE, SK, UK)
filtrationinfo@parker.com

www.parker.com/hfde



Typical application examples. At the top of each product section, a 'typical application' photo example has been included.

Applications:

- Industrial gear boxes
- Heavy fuel oil filter for diesel engines
- Suction filter for fuel systems
- Medium pressure hydraulic filter

Providing heavy duty filtration solutions

Parker can provide correct filtration solutions for a multitude of fuel, gas, hydraulic oil and lubrication systems. A wide selection of low and medium pressure multi-purpose filters that offer several different filter elements – environmentally sound choices too – allowing highly customized solutions. Duplex filters and the ability to bank multiple filters together enables continuous filtration during element changes. Parker's heavy duty solutions for clean fluids and peace of mind.

Specification

Assembly:
In-line filter
Maximum operating pressure:
40 bar. For DN80 flanges 16 bar.
Nominal flow rate (30cSt):
350 l/min (21 m^3/h)
Connections:
Threads G1 for GSN3 and G1½ for GS6 and GS7. GS7 is available also with flanges DN80/PN16.
Seal material:
Fluoroelastomer or optionally nitrile
Operating temperature:
-40°C...+100°C with Nitrile seals, -20°C...+120°C with Fluoroelastomer seals, -20°C...+160°C with metal mesh elements and Fluoroelastomer seals.
Housing material:
Cast iron

Weight:
See dimensions table
Magnet pack:
Available as option
Bypass valve:
Standard opening pressure 1.6 bar, optionally with blocked bypass
Indicator options:
Visual, electrical or electronic indicator requires an indicator block. For details see indicator options table on product description page and catalogue section 4.
Filtration materials:
- Glassfibre Microglass III
- Cleanable metal mesh

Fluid compatibility:
Suitable for use with regular hydraulic and lubrication oils and fuel oils. For other fluids consult Parker Filtration.

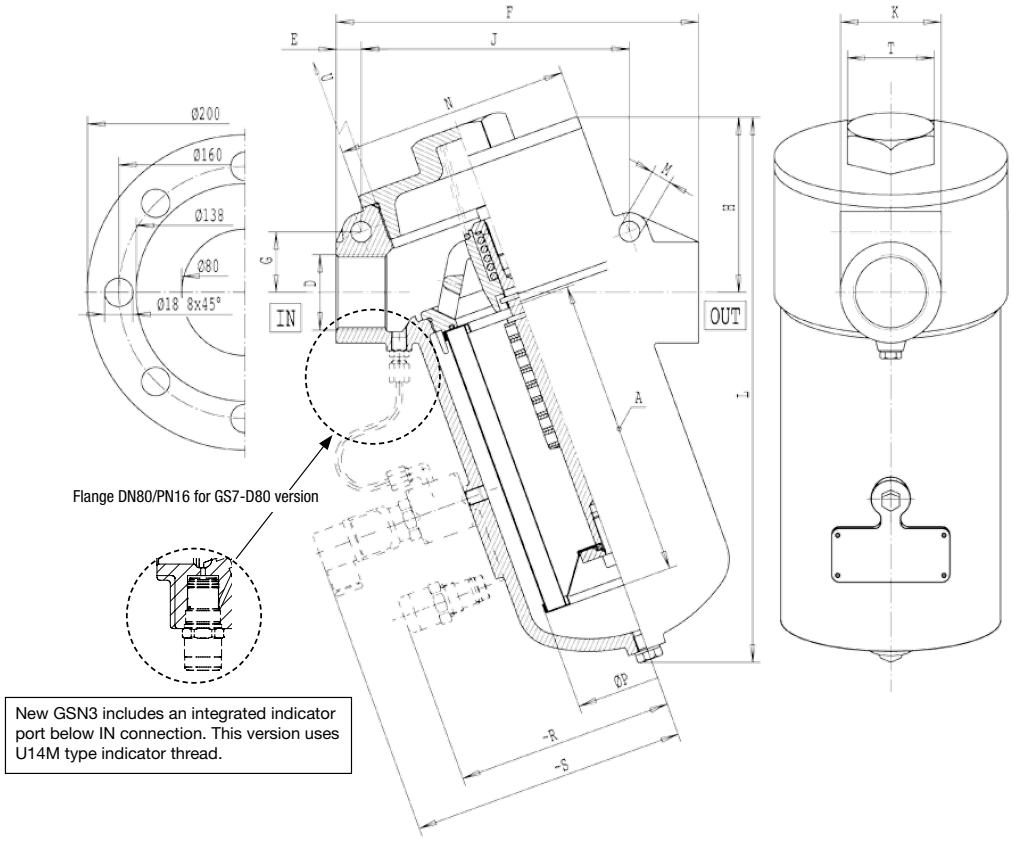

Type	Weight	A	D	F	G	H	J	K	L	M	N	P	R	S	T	U
GSN3	5.5 kg	150	G1	170	27	83	125	45	280	11	108	71	118	159	32	200
GS6	12 kg	190	G1½	230	38	112	170	64	350	13	148	106	139	180	55	210
GS7	15 kg	260	G1½	230	38	112	170	64	420	13	148	106	139	180	55	240
GS7-D80	24 kg	260	80	310	-	112	-	200	420	-	148	106	139	180	55	240

Tel: +45 63 12 83 00 | Email: ps@hymatik.com | www.hymatik.com | Hvidkaervej 27a, DK-5250 Odense SV, Denmark

GS Series

Pressure Drop Curves

$$\Delta p_{total} = \Delta p_{housing} + \Delta p_{element}$$

The recommended level of the initial pressure drop for this filter is maximum 0.5 bar.

Δ p-curves are measured at 30 cSt.

If the medium used has a viscosity different from 30 cSt, pressure drop over the element can be estimated as follows:

$$\Delta p_{total} = \Delta p_{housing} + \Delta p_{element} \times \frac{\text{working viscosity}}{30\ \text{cSt}}$$

GS Series housings

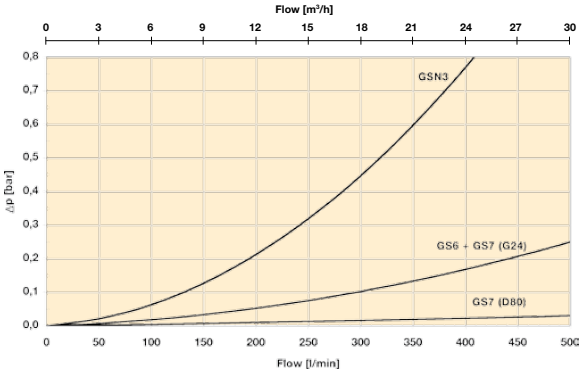

Elements for GSN3

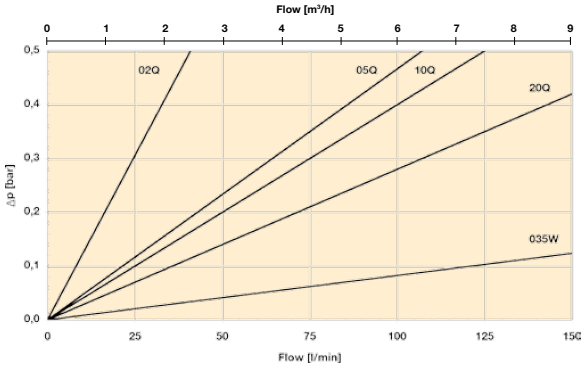

Elements for GS6

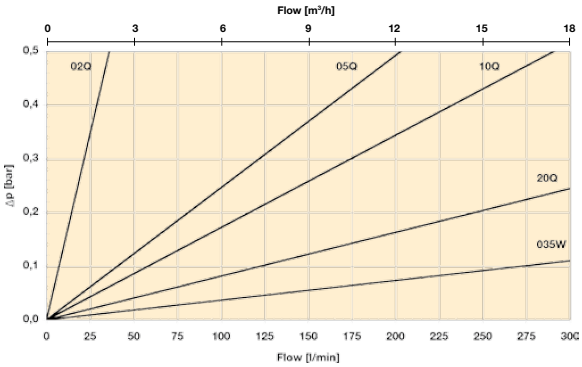

Elements for GS7

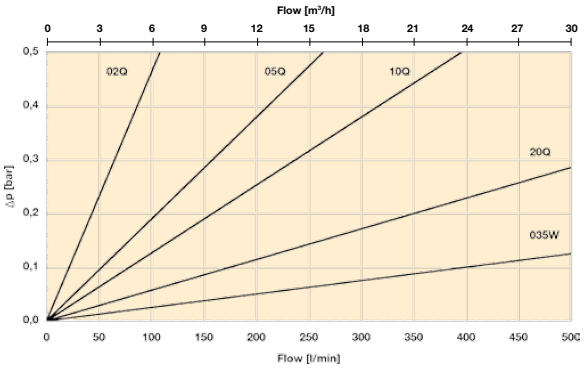

REPLACEMENT ELEMENTS (with Fluoroelastomer or Nitrile seal)					
Media code	**Order code for GSN3**	**Order code for GS6**		**Order code for GS7**	
Glassfibre	**Standard (no seal)**	**Fluoroelastomer**	**Nitrile**	**Fluoroelastomer**	**Nitrile**
02Q	937973Q	938208Q	937747Q	938209Q	937746Q
05Q	937974Q	938361Q	937758Q	938364Q	937759Q
10Q	**937952Q**	**938362Q**	937783Q	**938075Q**	937782Q
20Q	**937953Q**	**938363Q**	937794Q	**938005Q**	937795Q
Cleanable metal mesh					
035W	939180	939182	NA	939184	NA
060W	939181	939183	NA	939185	NA

Tel: +45 63 12 83 00 | Email: ps@hymatik.com | www.hymatik.com | Hvidkaervej 27a, DK-5250 Odense SV, Denmark

Product Description for GS

Complete Filter:

Table 1	Table 2	Table 3	Table 4	Table 5	Table 6	Table 7	Table 8

Table 1

FILTER TYPE	
Model	**CODE**
Medium pressure filter, cast iron	**GS**

Table 2

FILTER SIZE	
Housing size - element length	**CODE**
1-90 (former 1087)	**N3**
2-170 (former 1088)	**6**
2-230 (former 1089)	**7**

Table 3

DEGREE OF FILTRATION	
Element type	**CODE**
Microglass III	
Glassfibre 2 µm	02Q
Glassfibre 5 µm	05Q
Glassfibre 10 µm	**10Q**
Glassfibre 20 µm	**20Q**
Other medias	
Cleanable metal mesh 35 µm	035W
Cleanable metal mesh 60 µm	060W

Table 4

SEAL TYPE	
Seal material	**CODE**
Nitrile	B
Fluoroelastomer	**V**

Table 5

INDICATORS	
Options	**CODE**
No indicator block	**N**
Indicator port plugged	P
Visual indicator	**M3**
Electrical indicator	**T1**
Electronic indicator (PNP/N.O.)	F1
Electronic indicator (NPN/N.O.)	F2

Table 6

BYPASS VALVE	
Bypass/indicator setting	**CODE**
1.6 bar/1.0 bar	**F**
No/No	X

Table 7

FILTER CONNECTIONS	
Port size	**CODE**
G1 (length N3)	**G16**
G1½ (length 6 and 7)	**G24**
Flange DN80 (length 7)	D80

Table 8

OPTIONS	
Options	**CODE**
With bypass and magnets	**1**
No bypass, with magnets	2
With bypass, no magnets	5
No bypass, no magnets	6
Safety guard, no bypass, no magnets	7

SPARE PARTS		
Seal kit	**CODE**	
Seal material	**GSN3**	**GS6-7**
Fluoroelastomer	918045044	918045038
Nitrile	918045034	918045023

Please note the bolded options reflect standard options with reduced lead-time.

Tel: +45 63 12 83 00 | Email: ps@hymatik.com | www.hymatik.com | Hvidkaervej 27a, DK-5250 Odense SV, Denmark

GA Series

Medium Pressure Filters
Max. 230 l/min. 30 bar



Contamination-proof and customizable filter solution

Designed for various applications. In-out filter principle means there is no possibility for contaminated leak back into the system. Supplied with magnetic pre-filtration. Customizable for filter coolants thus ideal for metal cutting equipment. Visual or electronic differential pressure indicators and environmentally friendly filtration elements available.



Contact Information:

Parker Hannifin
Hydraulic Filter Division Europe

European Product Information Centre
Freephone: 00800 27 27 5374
(from AT, BE, CH, CZ, DE, EE, ES, FI, FR, IE, IT, PT, SE, SK, UK)
filtrationinfo@parker.com

www.parker.com/hfde

Applications:

- Gearboxes
- Bypass filtration
- Stone crushers
- Lube oil systems
- Metal cutting equipment

Specification

Assembly:
In-line filter
Maximum operating pressure:
30 bar
Nominal flow rate (30 cSt):
230 l/min (13.8 m^3/h)
Connections:
Threaded BSP ports. SAE ports available by request.
Seal material:
Nitrile, optionally Fluoroelastomer or Neoprene
Operating temperature:
-40°C...+100°C with Nitrile seals, -20°C...+120°C with Fluoroelastomer seals. For other temperatures consult Parker Filtration.
Housing material:
Aluminium
Weight:
See dimensions table

Bypass setting:
Opening pressure standard 1.5 bar, optionally 0.8 bar, 2.0 bar or blocked bypass
Filtration materials:
- Ecoglass for *LEIF*® element with reusable metal element sleeve. *LEIF*® contributes to ISO14001.
- Glassfibre Microglass III
- Resin impregnated cellulose paper 10 µm nominal
- Cleanable metal mesh

Magnetic pack:
Standard
Differential pressure indicators:
Visual or Visual-electrical indicator
Setting 1.2 bar (for 2.0 bar and 1.5 bar bypass)
or 0.7 bar (for 0.8 bar bypass)
Fluid compatibility:
Suitable for use with regular hydraulic and lubrication oils. For other fluids consult Parker Filtration.

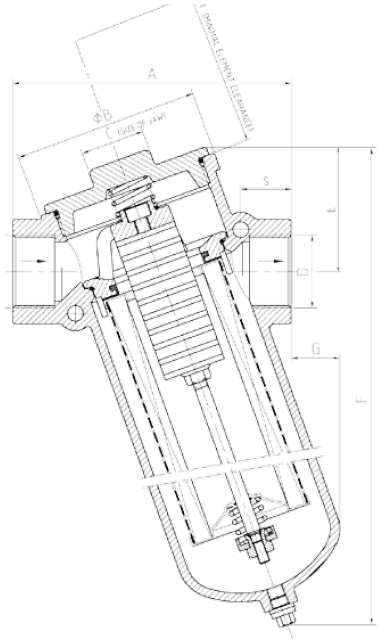

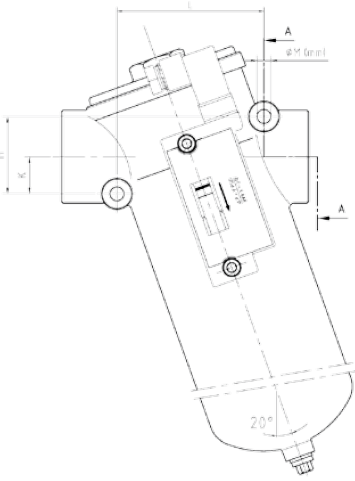

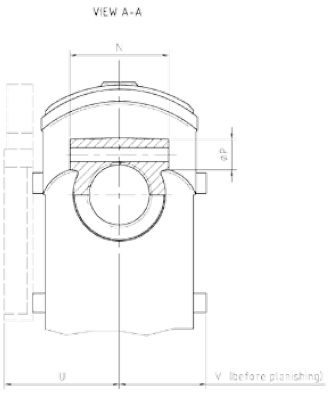

Type	A	B	C	D		E	F	G	H	K	L	M	N	P	S	T	U	V	Kg
				BSP ISO228	SAE														
GA1-30	150	106	32	G¾	12	70	180	3	50	24	95	9	44	20	28	143	86	63	2.1
GA1-60	160	106	32	G1	16	70	235	18	50	24	95	9	54	20	29	194	86	63	2.6
GA1-90	160	106	32	G1	16	70	275	29	50	24	95	9	54	20	29	238	86	63	3.2
GA1-120	160	106	32	G1¼	20	70	325	46	50	24	95	9	64	20	29	288	86	63	4.0
GA2-170	230	150	55	G1½	24	105	390	35	75	37	140	12	72	25	43	338	110	88	7.9
GA2-230	230	150	55	G1½	24	105	460	58	75	37	140	12	72	25	43	408	110	88	9.0

Tel: +45 63 12 83 00 | Email: ps@hymatik.com | www.hymatik.com | Hvidkaervej 27a, DK-5250 Odense SV, Denmark

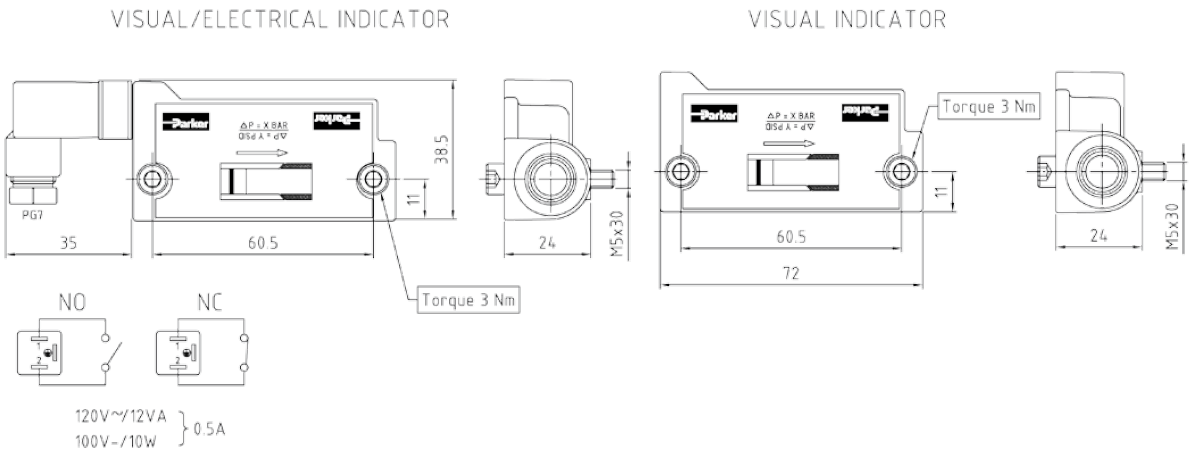

Visual Indicator - Manifold connected to filter housing	
Code (0.7 bar setting)	FMUD5BBAXXXL
Code (1.2 bar setting)	FMUD5EBAXXXL
Visual / Electrical Indicator - Manifold connected to filter housing	
Code (0.7 bar setting and NO type switch)	FMUE5BBAXXXL
Code (1.2 bar setting and NO type switch)	FMUE5EBAXXXL
Electric rating	120Vac/12VA or 100Vdc/10W
Electrical connection	AMP terminal 6.3. x 0.8 with plugged cable gland
Protection	IP65
Switch type	NO (NC on request)

Pressure Drop Curves for Housing

$$\Delta p_{total} = \Delta p_{housing} + \Delta p_{element}$$

The recommended level of the initial pressure drop for this filter is maximum 0.5 bar.

Δ p-curves are measured at 30 cSt.

If the medium used has a viscosity different from 30 cSt, pressure drop over the element can be estimated as follows:

$$\Delta p_{total} = \Delta p_{housing} + \Delta p_{element} \times \frac{\text{working viscosity}}{30\ \text{cSt}}$$

GA1 housings

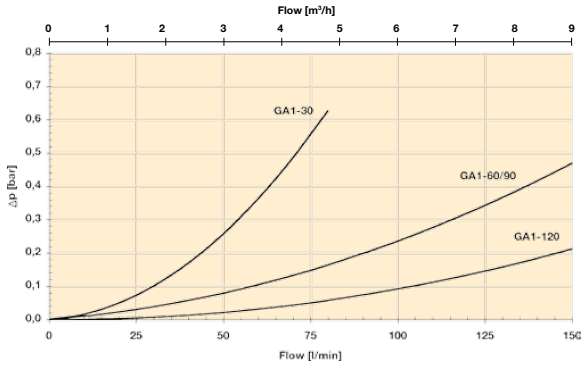

GA2-170/230 housings

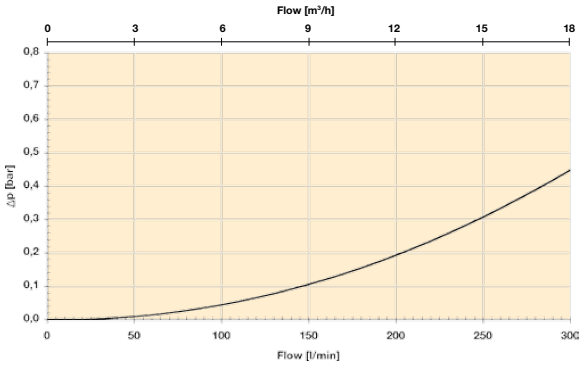

Parker Hannifin
Hydraulic Filter Division Europe
FDHB500UK/GA

GA Series

Pressure Drop Curves for Elements

GA1-30 elements (Length 0)

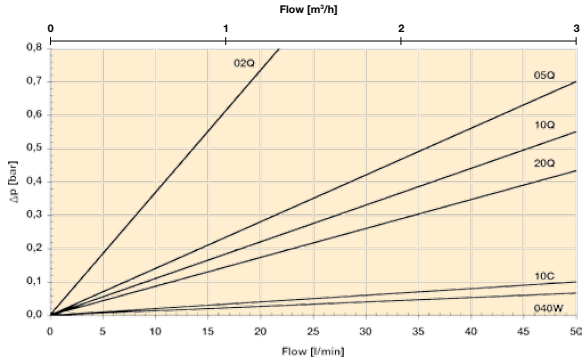

GA1-60 elements (Length 2)

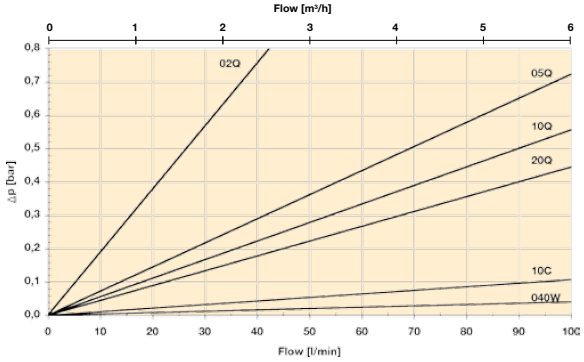

GA1-90 elements (Length 3)

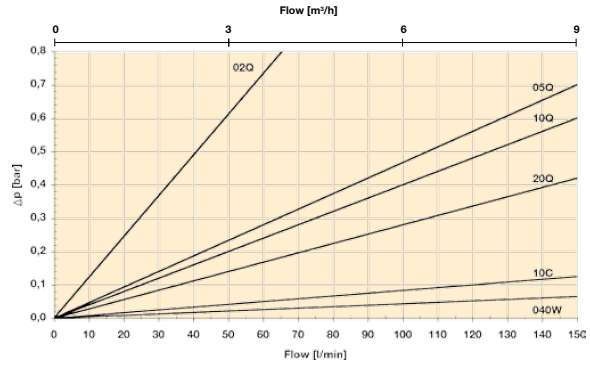

GA1-120 elements (Length 4)

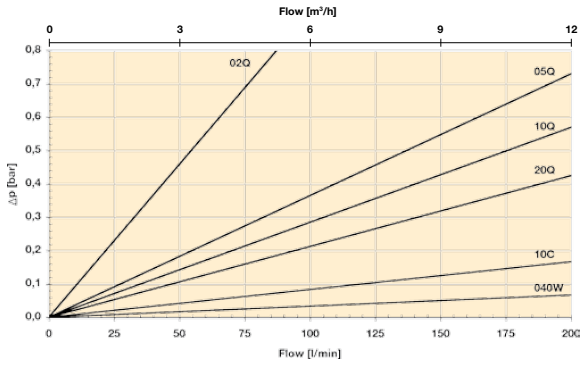

GA2-170 elements (Length 6)

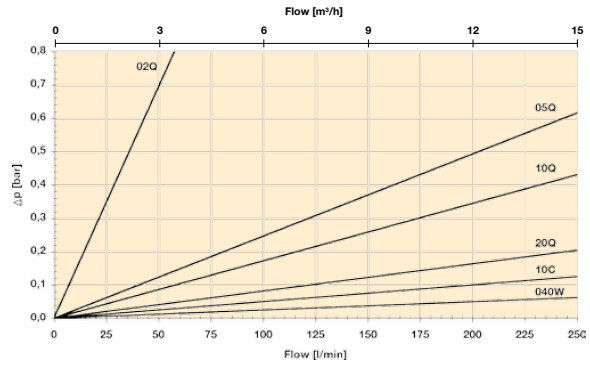

GA2-230 elements (Length 7)

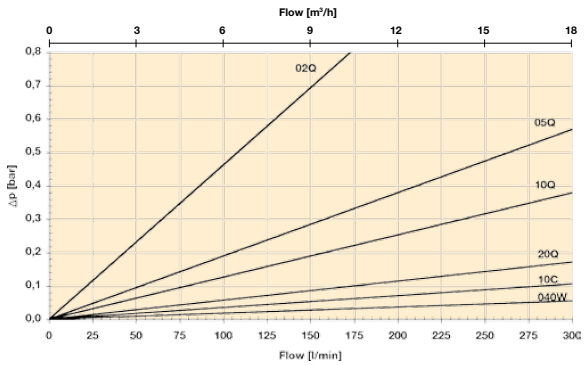

Tel: +45 63 12 83 00 | Email: ps@hymatik.com | www.hymatik.com | Hvidkaervej 27a, DK-5250 Odense SV, Denmark

GA Series

Medium Pressure Filters

Product Description for GA

Complete Filter:

Table 1	Table 2	Table 3	Table 4	Table 5	Table 6	Table 7	Table 8

Table 1

FILTER TYPE	
Model	**CODE**
Medium pressure filter, aluminium	**GA**

Table 2

FILTER SIZE	
Housing size - element length	**CODE**
1-30	0
1-60	**2**
1-90	3
1-120	**4**
2-170	6
2-230	**7**

Table 3

DEGREE OF FILTRATION	
Element type	**CODE**
Microglass III	
Glassfibre 2 µm	02Q
Glassfibre 5 µm	05Q
Glassfibre 10 µm	**10Q**
Glassfibre 20 µm	**20Q**
***LEIF*® elements**	
Glassfibre 2 µm	02QL
Glassfibre 5 µm	05QL
Glassfibre 10 µm	**10QL**
Glassfibre 20 µm	**20QL**
Other medias	
Cellulose 10 µm (nom)	10C
Cleanable metal mesh 40 µm	040W

Table 4

SEAL TYPE	
Seal material	**CODE**
Nitrile	**B**
Fluoroelastomer	V
Neoprene	N

Table 5

INDICATORS	
Options	**CODE**
Visual indicator on right*	**D3**
Visual indicator on left*	D4
Visual-electrical indicator on right*	**E3**
Visual-electrical indicator on left*	E4
Both indicator ports plugged	**P2**

* Indicator ports on other side machined and plugged.

Table 6

BYPASS VALVE	
Bypass/indicator setting	**CODE**
0.8 bar/0.7 bar	B
1.5 bar/1.2 bar	**E**
2.0 bar/1.2 bar	H
No/No	X

Table 7

FILTER CONNECTIONS	
Port size	**CODE**
G¾ (length 0)	G12
G1 (length 2 and 3)	**G16**
G1¼ (length 4)	**G20**
G1½ (length 6 and 7)	**G24**

Table 8

OPTIONS	
Options	**CODE**
With bypass and magnets	**1**
No bypass, with magnets	2
With bypass, no magnets	5
No bypass, no magnets	6

Tel: +45 63 12 83 00 | Email: ps@hymatik.com | www.hymatik.com | Hvidkaervej 27a, DK-5250 Odense SV, Denmark

CONVENTIONAL TYPE REPLACEMENT ELEMENTS WITH NITRILE SEALS							
Element length	Housing size	Microglass III				Cellulose 10 µm (nom)	Cleanable metal mesh 40 µm
		02Q	05Q	10Q	20Q		
0	1 - 30	937752Q	937753Q	937788Q	937789Q	937720	937821
2	**1 - 60**	937751Q	937754Q	**937787Q**	**937790Q**	937721	937820
3	1 - 90	937750Q	937755Q	937786Q	937791Q	937722	937819
4	**1 - 120**	937749Q	937756Q	**937785Q**	**937792Q**	937723	937818
6	2 - 170	937747Q	937758Q	937783Q	937794Q	937725	937816
7	**2 - 230**	937746Q	937759Q	**937782Q**	**937795Q**	937726	937815

LEIF® REPLACEMENT ELEMENTS					
Element length	Housing size	Ecoglass III			
		02QL	05QL	10QL	20QL
0	1 - 30	937822Q	937885Q	937884Q	937883Q
2	**1 - 60**	937823Q	937880Q	**937881Q**	**937882Q**
3	1 - 90	937824Q	937879Q	937878Q	937877Q
4	**1 - 120**	937825Q	937850Q	**937851Q**	**937876Q**
6	2 - 170	937827Q	937848Q	937853Q	937874Q
7	**2 - 230**	937828Q	937847Q	**937854Q**	**937873Q**

SPARE PARTS		
Seal kit	CODE	
Seal material	GA0-4	GA6-7
Nitrile	2049010009	2049010010
Fluoroelastomer	2049010031	2049010032
Neoprene	2049010038	2049010039

Please note the bolded options reflect standard options with reduced lead-time.

BGAH Series

Medium Pressure Filters
Max. 500 l/min. 25 bar



In-line solution for a straight pipeline

Pre-filtration by magnet column and a full-flow bypass with low hysteresis. Contamination-proof in-out filter principle. In- and outlet configuration allows integration in a straight pipeline. Nominal flow rate up to 500 l/min. Highly customizable for different applications.



Contact Information:

Parker Hannifin
Hydraulic Filter Division Europe

European Product Information Centre
Freephone: 00800 27 27 5374
(from AT, BE, CH, CZ, DE, EE, ES, FI, FR, IE, IT, PT, SE, SK, UK)
filtrationinfo@parker.com

www.parker.com/hfde

Applications:

- Industrial gearboxes
- Wind turbines
- Stone crushers
- Bypass and off-line filtration
- Designed for hydraulic and lube applications

Specification

Assembly:
In-line filter
Maximum operating pressure:
25 bar
Nominal flow rate (30 cSt):
500 l/min (30 m³/h)
Connections:
Flanges SAE 3" 3000-M
Seal material:
Nitrile, optionally Fluoroelastomer or Neoprene
Operating temperature:
-40°C...+100°C with Nitrile seals, -20°C...+120°C with Fluoroelastomer seals. For other temperatures consult Parker Filtration.
Housing material:
Aluminium
Weight:
BGAH 3-400: 21 kg
BGAH 3-500: 28 kg
Bypass setting:
Opening pressure standard 1.5 bar, optionally 0.8 bar, 2.0 bar or blocked bypass

Filtration materials:
- Ecoglass for ***LEIF***® element with reusable metal element sleeve. *LEIF*® contributes to ISO14001.
- Glassfibre Microglass III
- Resin impregnated cellulose paper 10µm nominal
- Cleanable metal mesh

Magnetic pack:
Standard
Differential pressure indicators:
Visual or Visual-electrical indicator
Setting 1.2 bar (for 2.0 bar and 1.5 bar bypass)
or 0.7 bar (for 0.8 bar bypass)
Fluid compatibility:
Suitable for use with regular hydraulic and lubrication oils. For other fluids consult Parker Filtration.

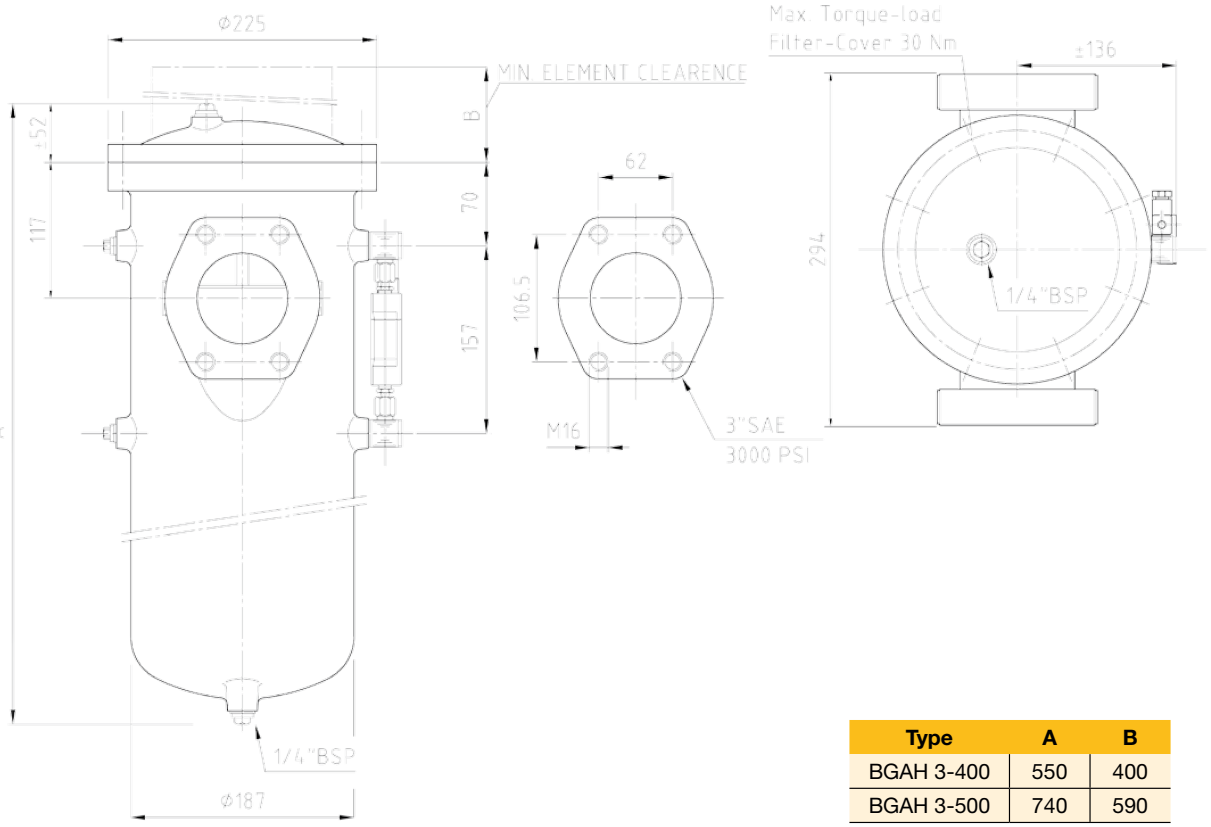

Type	A	B
BGAH 3-400	550	400
BGAH 3-500	740	590

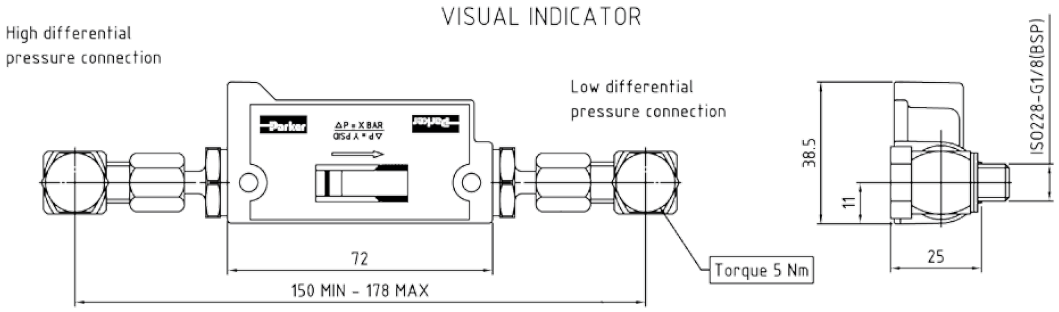

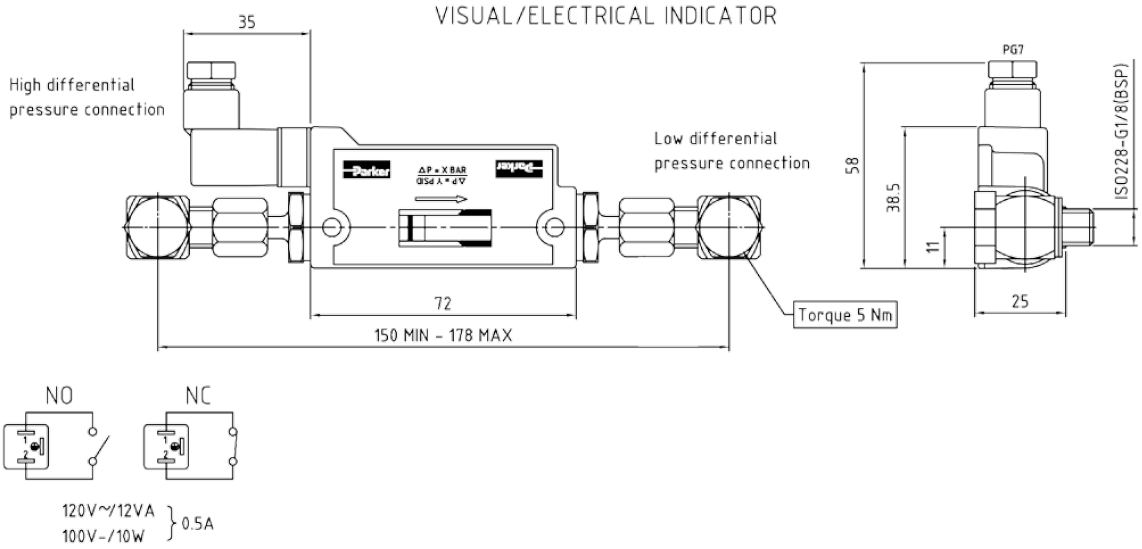

Visual Indicator - Mounted with couplings to filter housing	
Code (0.7 bar setting)	FMUDABBA155L
Code (1.2 bar setting)	FMUDAEBA155L
Visual / Electrical Indicator - Mounted with couplings to filter housing	
Code (0.7 bar setting and NO type switch)	FMUEBBBA155L
Code (1.2 bar setting and NO type switch)	FMUEBEBA155L
Electric rating	120Vac/12VA or 100Vdc/10W
Electrical connection	AMP terminal 6.3. x 0.8 with plugged cable gland
Protection	IP65
Switch type	NO (NC on request)

Tel: +45 63 12 83 00 | Email: ps@hymatik.com | www.hymatik.com | Hvidkaervej 27a, DK-5250 Odense SV, Denmark

BGAH Series

Pressure Drop Curves

$$\Delta p_{total} = \Delta p_{housing} + \Delta p_{element}$$

The recommended level of the initial pressure drop for this filter is maximum 0.5 bar.

Δ p-curves are measured at 30 cSt.

If the medium used has a viscosity different from 30 cSt, pressure drop over the element can be estimated as follows:

$$\Delta p_{total} = \Delta p_{housing} + \Delta p_{element} \times \frac{\text{working viscosity}}{30\ \text{cSt}}$$

BGAH housing

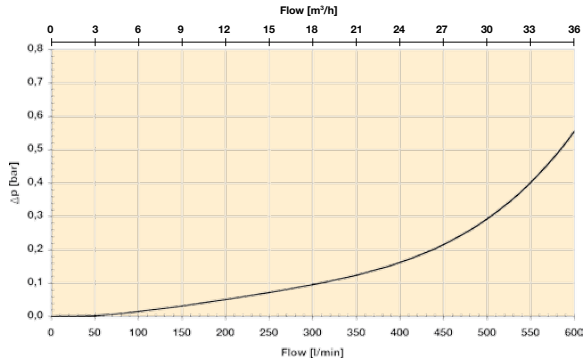

BGAH 3-400 elements (Length 11)

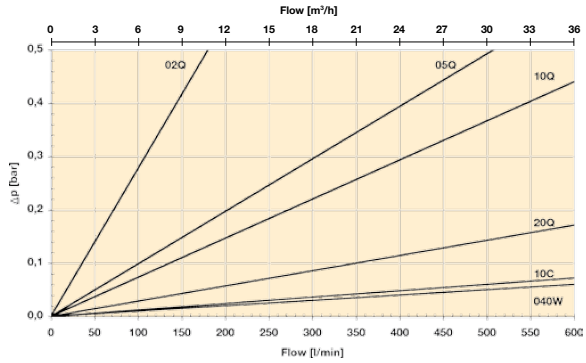

BGAH 3-500 elements (Length 12)

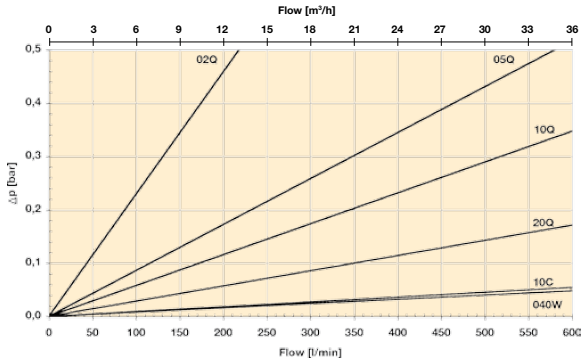

BGAH Series

Medium Pressure Filters

Product Description for BGAH

Complete Filter:

Table 1	Table 2	Table 3	Table 4	Table 5	Table 6	Table 7	Table 8

Table 1

FILTER TYPE	
Model	**CODE**
Medium pressure filter, aluminium	**BGAH**

Table 2

FILTER SIZE	
Housing size - element length	**CODE**
3-400	11
3-500	**12**

Table 3

DEGREE OF FILTRATION	
Element type	**CODE**
Microglass III	
Glassfibre 2 µm	02Q
Glassfibre 5 µm	05Q
Glassfibre 10 µm	**10Q**
Glassfibre 20 µm	**20Q**
***LEIF*® elements**	
Glassfibre 2 µm	02QL
Glassfibre 5 µm	05QL
Glassfibre 10 µm	**10QL**
Glassfibre 20 µm	**20QL**
Other medias	
Cellulose 10 µm (nom)	10C
Cleanable metal mesh 40 µm	040W

Table 4

SEAL TYPE	
Seal material	**CODE**
Nitrile	**B**
Fluoroelastomer	V
Neoprene	N

Table 5

INDICATORS	
Options	**CODE**
Visual indicator on right*	**D8**
Visual indicator on left*	D9
Visual-electrical indicator on right*	**E9**
Visual-electrical indicator on left*	EA
Both indicator ports plugged	**P2**

* Indicator ports on other side machined and plugged.

Table 6

BYPASS VALVE	
Bypass/indicator setting	**CODE**
0.8 bar/0.7 bar	B
1.5 bar/1.2 bar	**E**
2.0 bar/1.2 bar	H
No/No	X

Table 7

FILTER CONNECTIONS	
Port size	**CODE**
SAE flange 3”-3000M	**R48**

Table 8

OPTIONS	
Options	**CODE**
With bypass and magnets	**1**
No bypass, with magnets	2
With bypass, no magnets	5
No bypass, no magnets	6

Tel: +45 63 12 83 00 | Email: ps@hymatik.com | www.hymatik.com | Hvidkaervej 27a, DK-5250 Odense SV, Denmark

CONVENTIONAL TYPE REPLACEMENT ELEMENTS WITH NITRILE SEALS							
Element length	Housing size	Microglass III				Cellulose 10 µm (nom)	Cleanable metal mesh 40 µm
		02Q	05Q	10Q	20Q		
11	3-400	937742Q	937763Q	937778Q	937799Q	937728	937813
12	**3-500**	937741Q	937764Q	**937777Q**	**937800Q**	937729	937812

LEIF® REPLACEMENT ELEMENTS					
Element length	Housing size	Ecoglass III			
		02QL	05QL	10QL	20QL
11	3-400	937832Q	937843Q	937858Q	937869Q
12	**3-500**	937833Q	937842Q	**937859Q**	**937868Q**

SPARE PARTS	
Seal kit	**CODE**
Seal material	
Nitrile	2049010000
Fluoroelastomer	2049010055
Neoprene	2049010034

Please note the bolded options reflect standard options with reduced lead-time.

BGLS Series

Low Pressure Filters
Max. 2000 l/min. 10 bar



Heavy duty in-line filter solution

Upper housing aluminium and lower housing steel allows low weight combined to high capacity. Magnetic pre-filtration and nominal flow up to 2000 l/min.



Contact Information:

Parker Hannifin
Hydraulic Filter Division Europe

European Product Information Centre
Freephone: 00800 27 27 5374
(from AT, BE, CH, CZ, DE, EE, ES, FI, FR, IE, IT, PT, SE, SK, UK)
filtrationinfo@parker.com

www.parker.com/hfde

Applications:

- Lubrication systems
- Wind turbines
- Hydraulic presses
- Large industrial gearboxes

Specification

Assembly:
In-line filter
Maximum operating pressure:
10 bar
Nominal flow rate (30 cSt):
2000 l/min (120 m³/h)
Connections:
Flanges SAE 3" 3000-M
Seal material:
Nitrile, optionally Fluoroelastomer
Operating temperature:
-40°C...+100°C with Nitrile seals, -20°C...+120°C with Fluoroelastomer seals. For other temperatures consult Parker Filtration.
Housing material:
Upper housing aluminium, lower housing steel
Weight:
BGLS 4-1000: 56 kg
BGLS 4-1500: 65 kg
BGLS 4-2000: 75 kg

Bypass setting:
Opening pressure standard 1.5 bar, optionally 0.8 bar, 2.0 bar or blocked bypass
Filtration materials:
- Ecoglass for *LEIF*® element with reusable metal element sleeve. *LEIF*® contributes to ISO14001.
- Glassfibre Microglass III
- Resin impregnated cellulose paper 10µm nominal
- Cleanable metal mesh

Magnetic pack:
Standard
Differential pressure indicators:
Visual or Visual-electrical indicator, see page 200.
(In ordering code, replace 155 with 178).
Setting 1.2 bar (for 2.0 bar and 1.5 bar bypass) or 0.7 bar (for 0.8 bar bypass).
Fluid compatibility:
Suitable for use with regular hydraulic and lubrication oils. For other fluids consult Parker Filtration.

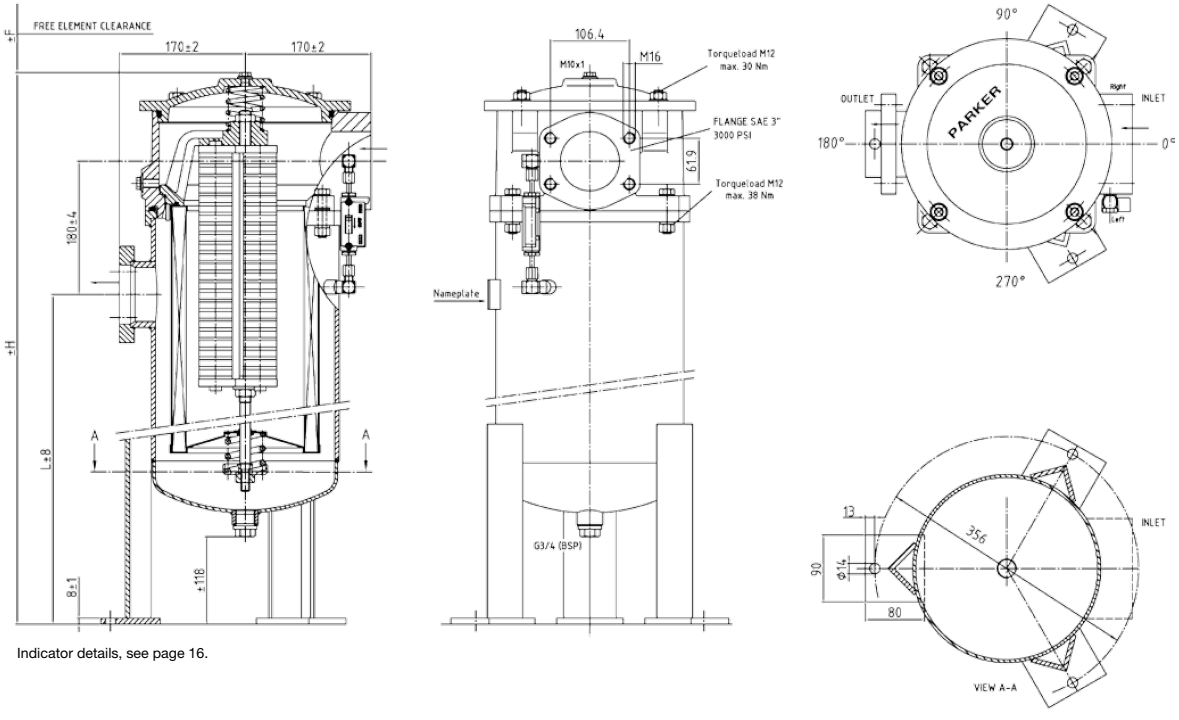

Indicator details, see page 16.

Type	H	L	F
1000	975	635	735
1500	1255	915	1015
2000	1520	1180	1280

Tel: +45 63 12 83 00 | Email: ps@hymatik.com | www.hymatik.com | Hvidkaervej 27a, DK-5250 Odense SV, Denmark

BGLS Series

Pressure Drop Curves

$$\Delta p_{total} = \Delta p_{housing} + \Delta p_{element}$$

The recommended level of the initial pressure drop for this filter is maximum 0.5 bar.

Δ p-curves are measured at 30 cSt.

If the medium used has a viscosity different from 30 cSt, pressure drop over the element can be estimated as follows:

$$\Delta p_{total} = \Delta p_{housing} + \Delta p_{element} \times \frac{\text{working viscosity}}{30\ \text{cSt}}$$

BGLS housing

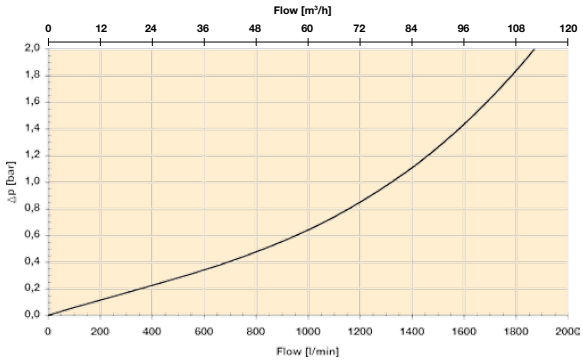

BGLS 4-1000 elements (Length 15)

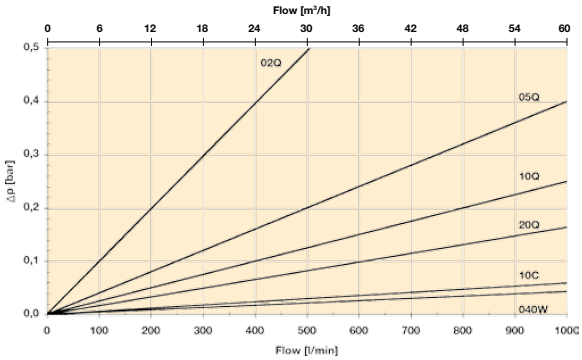

BGLS 4-1500 elements (Length 16)

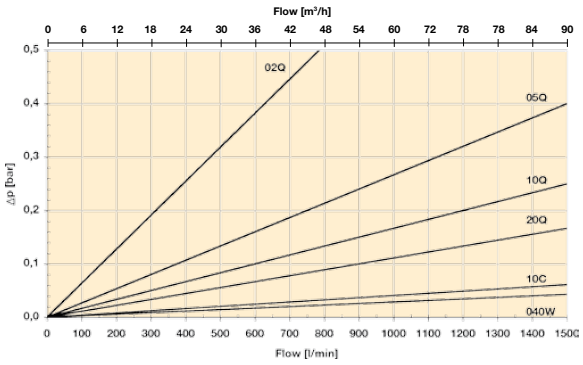

BGLS 4-2000 elements (Length 17)

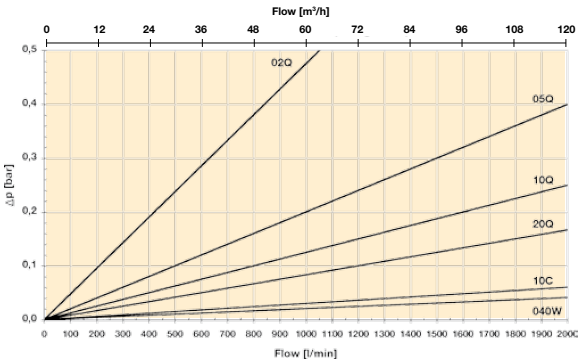

CONVENTIONAL TYPE REPLACEMENT ELEMENTS WITH NITRILE SEALS

Element length	Housing size	Microglass III				Cellulose 10 µm (nom)	Cleanable metal mesh 40 µm
		02Q	05Q	10Q	20Q		
15	**4-1000**	937738Q	937767Q	**937774Q**	**937803Q**	937732	937809
16	4-1500	937737Q	937768Q	937773Q	937804Q	937733	937808
17	**4-2000**	937736Q	937769Q	**937772Q**	**937805Q**	937734	937807

Tel: +45 63 12 83 00 | Email: ps@hymatik.com | www.hymatik.com | Hvidkaervej 27a, DK-5250 Odense SV, Denmark

Product Description for BGLS

Complete Filter:

Table 1	Table 2	Table 3	Table 4	Table 5	Table 6	Table 7	Table 8

Table 1

FILTER TYPE	
Model	**CODE**
Medium pressure filter, upper housing aluminium, lower housing steel	**BGLS**

Table 2

FILTER SIZE	
Housing size - element length	**CODE**
4-1000	**15**
4-1500	16
4-2000	**17**

Table 3

DEGREE OF FILTRATION	
Element type	**CODE**
Microglass III	
Glassfibre 2 µm	02Q
Glassfibre 5 µm	05Q
Glassfibre 10 µm	**10Q**
Glassfibre 20 µm	**20Q**
***LEIF*® elements** (not available for length 17)	
Glassfibre 2 µm	02QL
Glassfibre 5 µm	05QL
Glassfibre 10 µm	**10QL**
Glassfibre 20 µm	**20QL**
Other medias	
Cellulose 10 µm (nom)	10C
Cleanable metal mesh 40 µm	040W

Table 4

SEAL TYPE	
Seal material	**CODE**
Nitrile	**B**
Fluoroelastomer	V

Table 5

INDICATORS	
Options	**CODE**
Visual indicator on right	**D6**
Visual indicator on left	D7
Visual-electrical indicator on right	**E7**
Visual-electrical indicator on left	E8
Plugged indicator ports on right	P

Table 6

BYPASS VALVE	
Bypass/indicator setting	**CODE**
0.8 bar/0.7 bar	B
1.5 bar/1.2 bar	**E**
2.0 bar/1.2 bar	H
No/No	X

Table 7

FILTER CONNECTIONS	
Port size/outlet direction	**CODE**
SAE flange 3”-3000M/front (0°)	R48F
SAE flange 3”-3000M/right (90°)	R48R
SAE flange 3”-3000M/back (180°)	**R48B**
SAE flange 3”-3000M/left (270°)	R48L

Table 8

OPTIONS	
Options	**CODE**
With bypass and magnets	**1**
No bypass, with magnets	2
With bypass, no magnets	5
No bypass, no magnets	6

***LEIF*® REPLACEMENT ELEMENTS**					
Element length	**Housing size**	**Ecoglass III**			
		02QL	**05QL**	**10QL**	**20QL**
15	**4-1000**	937836Q	937839Q	**937862Q**	**937865Q**
16	4-1500	937837Q	937838Q	937863Q	937864Q
17	4-2000	NA	NA	NA	NA

SPARE PARTS	
Seal kit	**CODE**
Seal material	
Nitrile	2049010023

Please note the bolded options reflect standard options with reduced lead-time.

Tel: +45 63 12 83 00 | Email: ps@hymatik.com | www.hymatik.com | Hvidkaervej 27a, DK-5250 Odense SV, Denmark

SF1040 Series

Low Pressure Filters
Max. 1400 l/min. 10 bar



Multi-purpose filter for gas and high flow fluid systems

Strong welded steel construction housing features DN80 or DN100 connections. Several media options including PED 3 classified versions for gas applications. As options available safety filter to secure filtration even in by pass situations, and differential pressure indicator for accurate operation control.



Contact Information:

Parker Hannifin
Hydraulic Filter Division Europe

European Product Information Centre
Freephone: 00800 27 27 5374
(from AT, BE, CH, CZ, DE, EE, ES, FI, FR, IE, IT, PT, SE, SK, UK)
filtrationinfo@parker.com

www.parker.com/hfde

Applications:

- Lubricating oil filter for industrial systems
- Gas fine filter for combustion engines
- Fuel oil filter for high flow systems
- Large in line low-pressure filter for hydraulic systems

Tel: +45 63 12 83 00 | Email: ps@hymatik.com | www.hymatik.com | Hvidkaervej 27a, DK-5250 Odense SV, Denmark

Specification

Assembly:
In-line filter, vertical installation or optionally horizontal installation. Includes 2 elements.
Maximum operating pressure:
10 bar
Nominal flow rate (30 cSt):
1400 l/min (84 m^3/h)
Connections:
Flanges DN80/PN16 or DN100/PN16
Seal material:
Fluoroelastomer
Operating temperature:
-20°C...+120°C, with Fluoroelastomer seals,
-20°C...+160°C with metal mesh elements and Fluoroelastomer seals.
Housing material:
Steel or stainless steel
Weight:
100 kg

Bypass valve:
Standard without bypass. Optionally opening pressure 2.0 bar.
Filtration materials:
- Glassfibre Microglass III
- Resin impregnated cellulose paper 15 µm nominal
- Cleanable metal mesh

Indicator options:
Visual, electrical or electronic indicator requires an indicator block. For details see indicator options table in product description page and catalogue section 4.
Fluid compatibility:
Suitable for use with regular hydraulic and lubrication oils and fuel oils. For heavy fuel oil applications, please specify option P2 (see table 8 in product description) which ensures that filters are delivered with documentation according PED 97/23/EC category II. Respectively for combustible gas applications, specify option P3 for PED category III. For other fluids consult Parker Filtration.

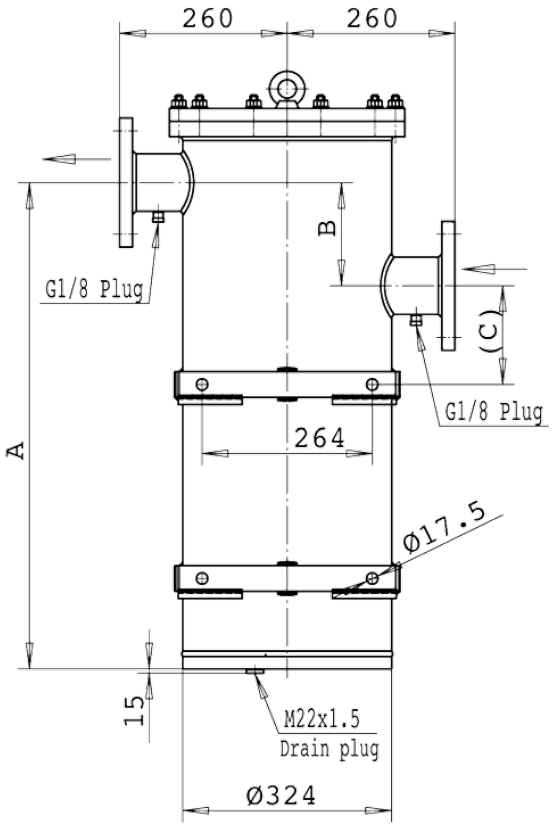

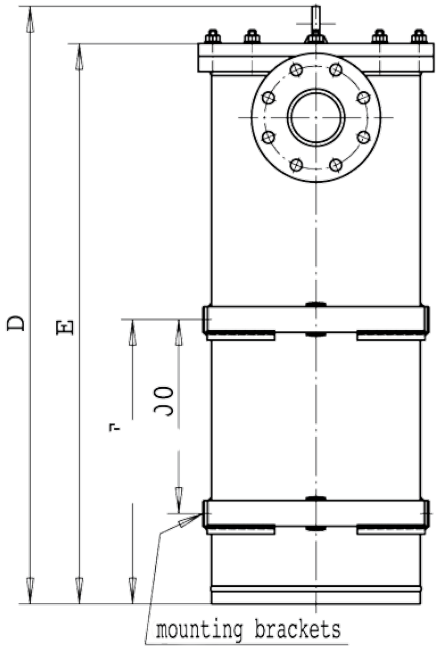

Type	A	B	C	D	E	F
DN80/PN16	753	160	153	932	868	440
DN100/PN16	786	186	140	978	914	460

Parker Hannifin
Hydraulic Filter Division Europe
FDHB500UK/SF1040

SF1040 Series

Pressure Drop Curves

$$\Delta p_{total} = \Delta p_{housing} + \Delta p_{element}$$

The recommended level of the initial pressure drop for this filter is maximum 0.5 bar.

Δ p-curves are measured at 30 cSt.

If the medium used has a viscosity different from 30 cSt, pressure drop over the element can be estimated as follows:

$$\Delta p_{total} = \Delta p_{housing} + \Delta p_{element} \times \frac{\text{working viscosity}}{30\ \text{cSt}}$$

SF1040 DN80/PN16 housing

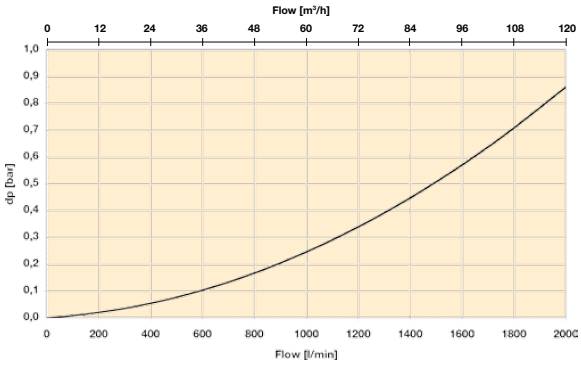

SF1040 element pack (2 pcs)

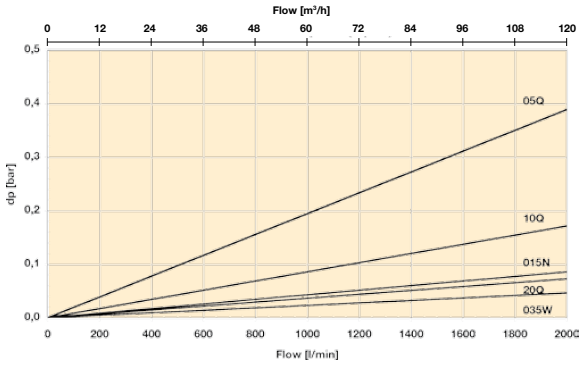

Tel: +45 63 12 83 00 | Email: ps@hymatik.com | www.hymatik.com | Hvidkaervej 27a, DK-5250 Odense SV, Denmark

Product Description for SF1040

Complete Filter:

Table 1	Table 2	Table 3	Table 4	Table 5	Table 6	Table 7	Table 8

Table 1

FILTER TYPE	
Model	**CODE**
Single filter	**SF1040**
Stainless steel housing	SFR1040
Horizontal installation	SFH1040

Table 2

FILTER SIZE	
Length/elements	**CODE**
2 elements housing	**2**

Table 3

DEGREE OF FILTRATION	
Element type	**CODE**
Microglass III	
Glassfibre 5 µm	05Q
Glassfibre 10 µm	**10Q**
Glassfibre 20 µm	**20Q**
Other medias	
Cellulose 15 µm (nom)	015N
Cleanable metal mesh 35 µm	035W
Cleanable metal mesh 60 µm	060W

Table 4

SEAL TYPE	
Seal material	**CODE**
Fluoroelastomer	**V**

REPLACEMENT ELEMENTS	
Media code	**Order code**
Glassfibre	**Microglass III**
05Q	939381Q
10Q	**939382Q**
20Q	**939383Q**
Cellulose 15 µm (nom)	
015N	939384
Cleanable metal mesh	
035W	939385
060W	939386

Table 5

INDICATORS	
Options	**CODE**
No indicator block	**N**
Indicator port plugged	P
Visual indicator	**M3**
Electrical indicator	**T1**
Electronic indicator (PNP/N.O.)	F1
Electronic indicator (NPN/N.O.)	F2
ATEX indicator PNP/N.O.	X1

Table 6

BYPASS VALVE	
Bypass/indicator setting	**CODE**
2.0 bar/1.5 bar	**H**
No/No	**X**

Table 7

FILTER CONNECTIONS	
Port size	**CODE**
DN80 T-port	**D80T**
DN80 C-port (both ports to same direction)	D80C
DN100 T-port	**D100T**

Table 8

OPTIONS	
Options	**CODE**
With bypass	1
No bypass	**2**
PED category 2	P2
PED category 3	P3
No mounting brackets	NB
Secondary element 60 µm	F

If several options are selected, please add the codes in order listed above.

SPARE PARTS	
Seal kit	**CODE**
Seal material	
Fluoroelastomer	916045044
Secondary element	**CODE**
Wire mesh 60 µm	939377

Please note the bolded options reflect standard options with reduced lead-time.

Tel: +45 63 12 83 00 | Email: ps@hymatik.com | www.hymatik.com | Hvidkaervej 27a, DK-5250 Odense SV, Denmark

Eco130 Series

Medium Pressure Filters
Max. 1400 l/min. 30 bar



Modular system for industrial applications

High flow return filters for industrial use on hydraulic or lubrication systems. High flow and pressure up to 30 bar in single units. Ability to bank multiple filters together enables continuous filtration during element changes. Coreless Ecoglass III elements.



Contact Information:

Parker Hannifin
Hydraulic Filter Division Europe

European Product Information Centre
Freephone: 00800 27 27 5374
(from AT, BE, CH, CZ, DE, EE, ES, FI, FR, IE, IT, PT, SE, SK, UK)
filtrationinfo@parker.com

www.parker.com/hfde

Applications:

- Paper production plants
- Steel mills
- Aluminium mills
- Industrial power packs
- Lubrication systems
- Power generation

Tel: +45 63 12 83 00 | Email: ps@hymatik.com | www.hymatik.com | Hvidkaervej 27a, DK-5250 Odense SV, Denmark

Specification

Assembly:
In-line filter as a single filter, a dual unit, a parallel unit or a filter system with L-bore selecting valve assembly (only one side in use). Vertical installation.
Maximum operating pressure:
Single filter: 30 bar
Dual and parallel units and filter systems: 16 bar
Nominal flow rate (30 cSt):
Single filter: 1000 l/min (60 m^3/h)
Dual and parallel units and filter systems: 1400 l/min (84 m3/h)
Connections:
Single filter: Flanges SAE 2" 3000-M, SAE 2½" 3000-M or with adaptor threads G1½ or G2.
Dual units: Flanges SAE 3" 3000-M or with adaptor threads G2.
Parallel units and filter systems: DN80/PN16 or DN100/PN16.
Seal material:
Nitrile or optionally fluoroelastomer

Operating temperature:
-40°C...+100°C with Nitrile seals, -20°C...+120°C with Fluoroelastomer seals. For other temperatures consult Parker Filtration.
Housing material:
Aluminium
Weight:
See a table in dimension drawing
Bypass valve:
Opening pressure 3.5 bar
Filtration materials:
- Glassfibre Microglass III
- Environmentally friendly Ecoglass III. No metal parts.
- Cleanable metal mesh

Indicator options:
For details see indicator options table on product description page and catalogue section 4.
Differential pressure indicators:
Visual indicator always included to each column, setting 2.5 bar. Optional electrical or electronic indicators to be mounted on lower indicator port.
Fluid compatibility:
Suitable for use with regular hydraulic and lubrication oils. For other fluids consult Parker Filtration.

Single Assemblies 130M

Connection options	
Body flange	SAE 2" 3000-M
	SAE 2½" 3000-M
Adaptor flange	G1½
	G2
	SAE 3" 3000-M (90° elbow)

Weights (kg)	Length 2	Length 3
Single	25	33
Dual D2	70	86
Parallel P2	75	90
System S2	110	130
System S4	205	235
System S6	260	310
System S8	340	705

Type	A
Length 2	650
Length 3	1210

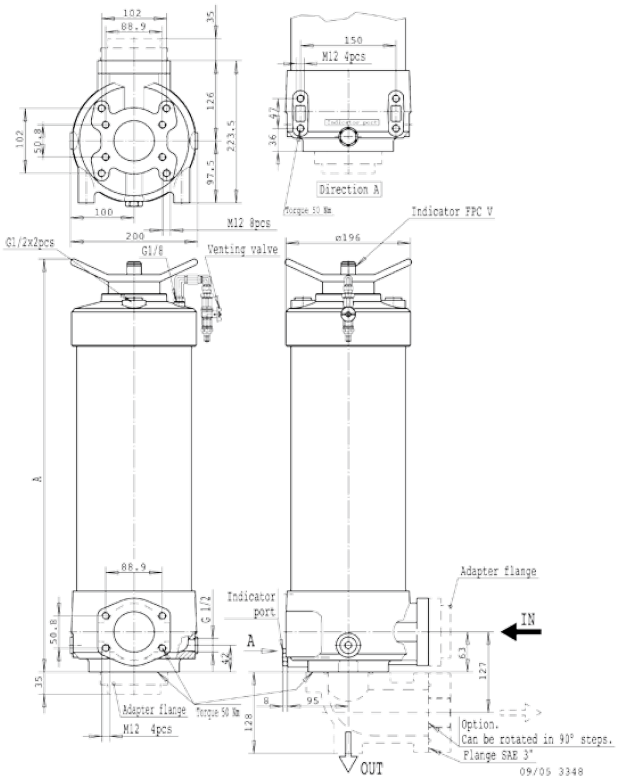

Eco130 Series

Medium Pressure Filters

Dual System 130D

Connection options	
Body flange	SAE 3” 3000-M
Adaptor flange thread	G2

Type	A
Length 2	780
Length 3	1340

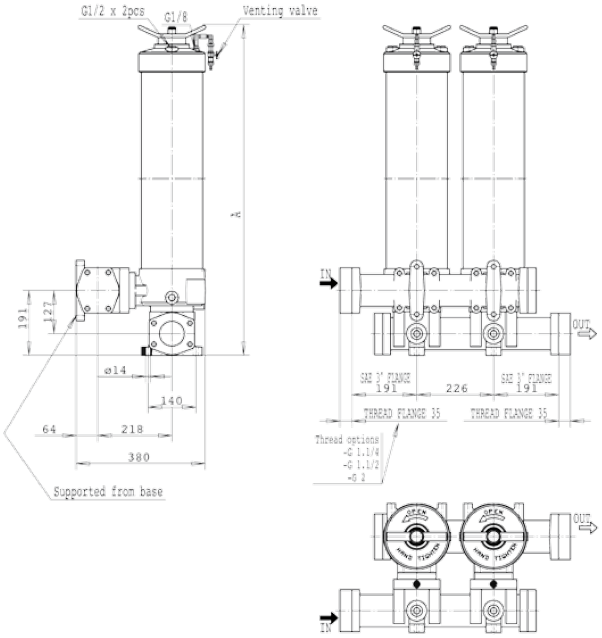

Parallel System 130N

Type	A
Length 2	780
Length 3	1340

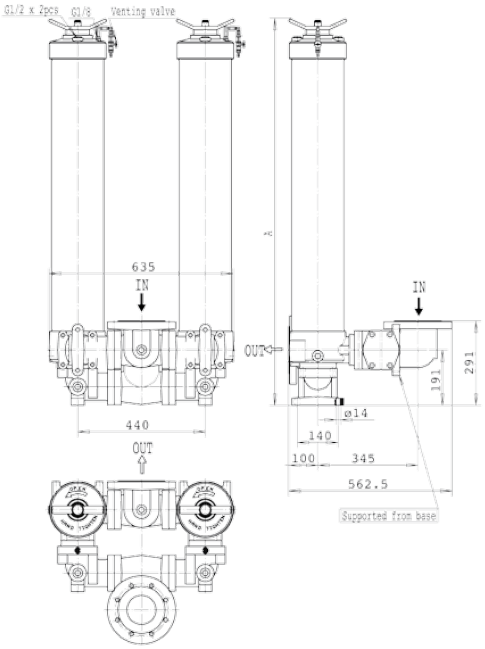

Tel: +45 63 12 83 00 | Email: ps@hymatik.com | www.hymatik.com | Hvidkaervej 27a, DK-5250 Odense SV, Denmark

130S System 1 + 1 units
T-model

Type	A
Length 2	780
Length 3	1340

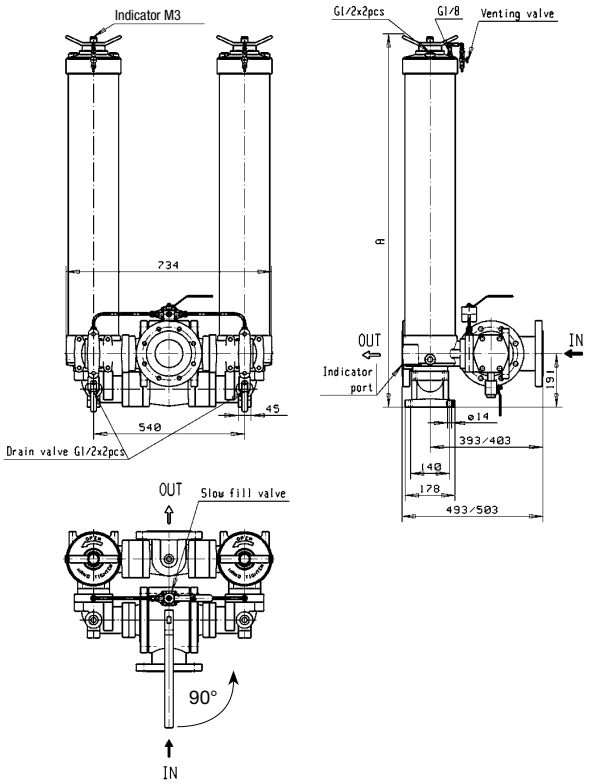

130S System 2 + 2 units
T-model

Type	A
Length 2	780
Length 3	1340

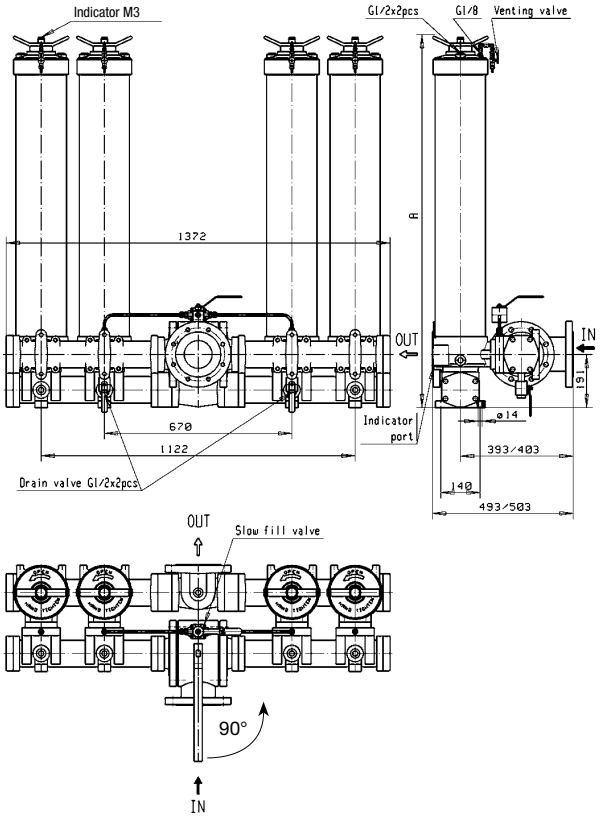

Tel: +45 63 12 83 00 | Email: ps@hymatik.com | www.hymatik.com | Hvidkaervej 27a, DK-5250 Odense SV, Denmark

130S System 3 + 3 units
T-model

Type	A
Length 2	780
Length 3	1340

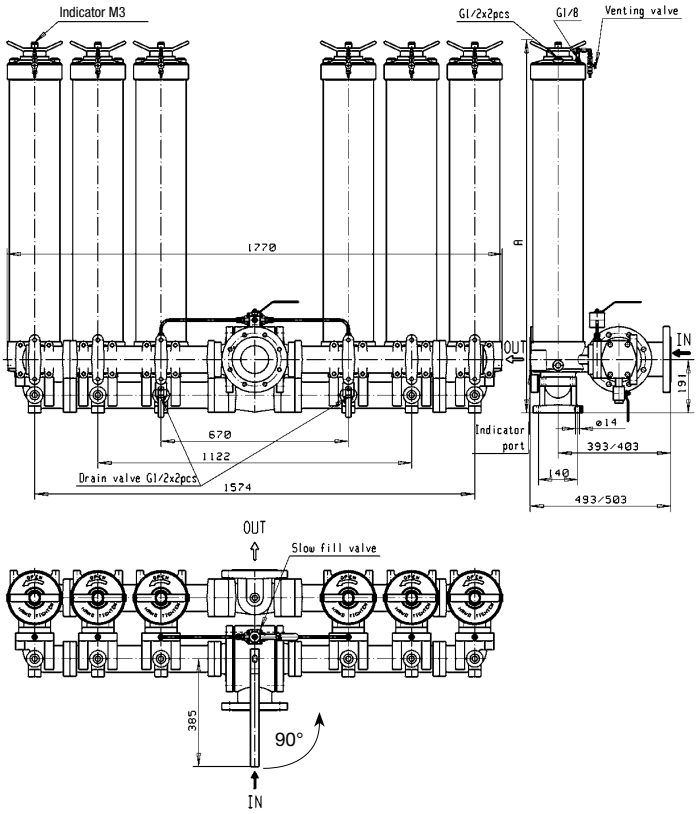

130S System 4 + 4 units
T-model

Type	A
Length 2	780
Length 3	1340

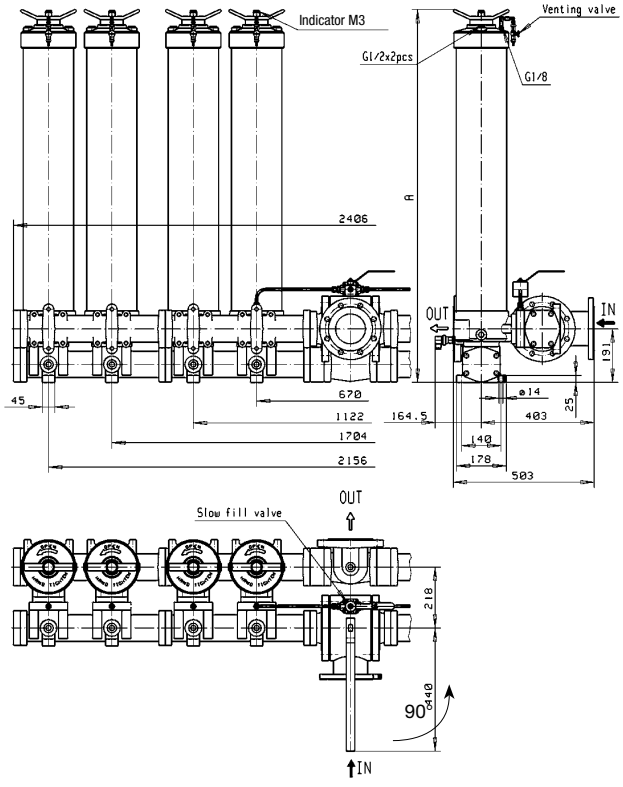

Tel: +45 63 12 83 00 | Email: ps@hymatik.com | www.hymatik.com | Hvidkaervej 27a, DK-5250 Odense SV, Denmark

130S System
L-model

Type	A
Length 2	780
Length 3	1340

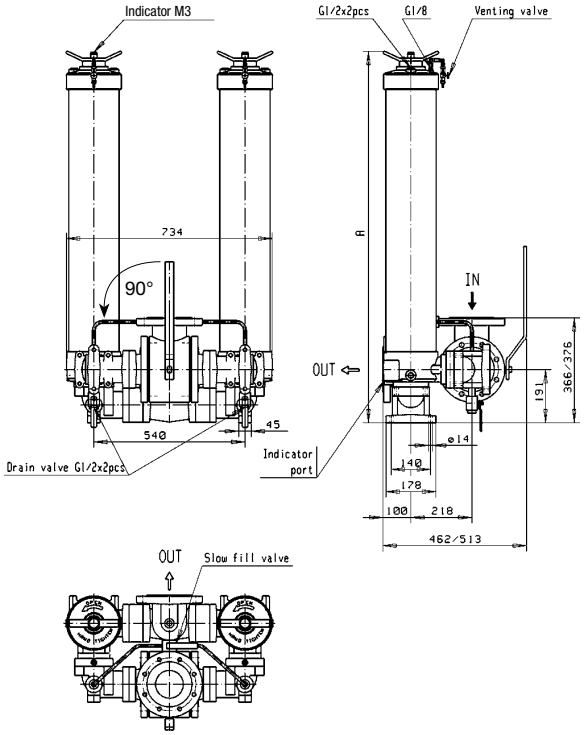

130S System
C-model

Type	A
Length 2	780
Length 3	1340

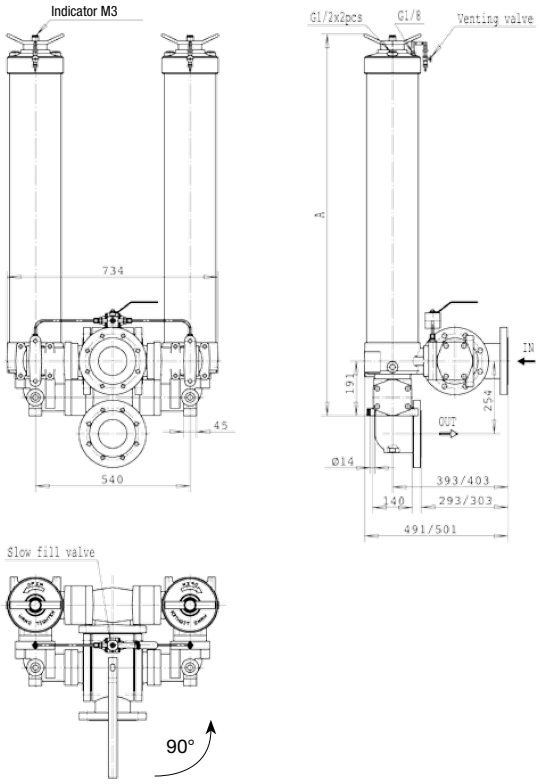

Tel: +45 63 12 83 00 | Email: ps@hymatik.com | www.hymatik.com | Hvidkaervej 27a, DK-5250 Odense SV, Denmark

Eco130 Series

Pressure Drop Curves

$$\Delta p_{total} = \Delta p_{housing} + \Delta p_{element}$$

The recommended level of the initial pressure drop for this filter is maximum 0.8 bar.

Δ p-curves are measured at 30 cSt.

If the medium used has a viscosity different from 30 cSt, pressure drop over the element can be estimated as follows:

$$\Delta p_{total} = \Delta p_{housing} + \Delta p_{element} \times \frac{\text{working viscosity}}{30\ \text{cSt}}$$

130M single unit housings

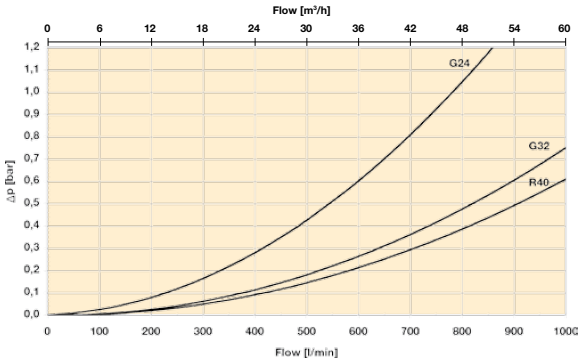

130S3 system housings with DN100

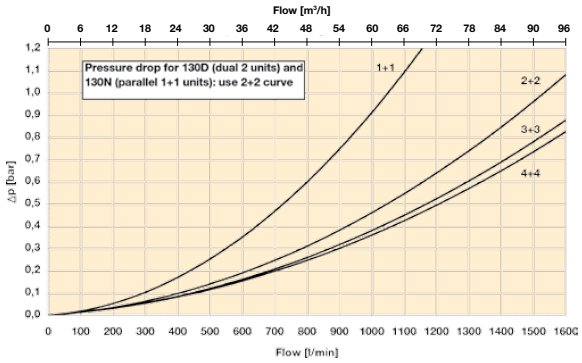

Length 2 elements

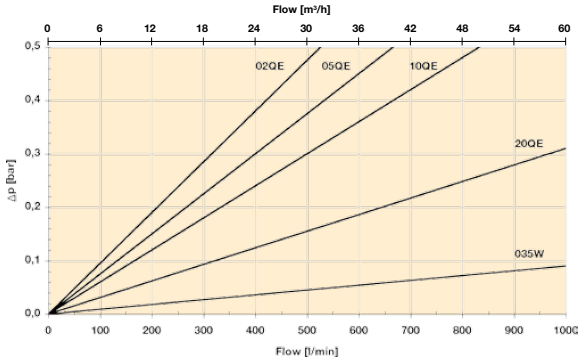

Length 3 elements

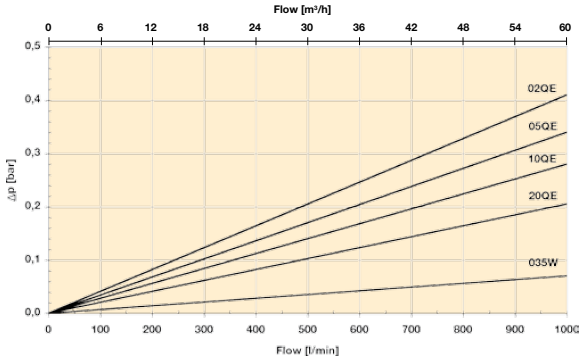

REPLACEMENT ECO-ELEMENTS WITH NITRILE SEALS		
Media	Length 2	Length 3
02QE	938721Q	938725Q
05QE	**938722Q**	**938726Q**
10QE	**938723Q**	**938727Q**
20QE	**938724Q**	**938728Q**

REPLACEMENT ELEMENTS WITH NITRILE SEALS		
Microglass III	Length 2	Length 3
02Q	938733Q	938737Q
05Q	938734Q	938738Q
10Q	938735Q	938739Q
20Q	938736Q	938740Q
Wire mesh		
035W	938760	938765
060W	938761	938766

Elements with fluoroelastomer seals: ask order codes from Parker Filtration.

Tel: +45 63 12 83 00 | Email: ps@hymatik.com | www.hymatik.com | Hvidkaervej 27a, DK-5250 Odense SV, Denmark

Product Description for Eco130

Complete Filter:

Table 1	Table 2	Table 3	Table 4	Table 5	Table 6	Table 7	Table 8

Table 1

FILTER TYPE	
Model	**CODE**
Single unit	**130M**
Dual unit	**130D**
Parallel unit	**130N**
System	**130S**

Table 2

FILTER TYPE	
Element length	**CODE**
Length 2	**2**
Length 3	**3**

Table 3

DEGREE OF FILTRATION	
Element type	**CODE**
Ecoglass III	
Glassfibre 2 µm	02QE
Glassfibre 5 µm	**05QE**
Glassfibre 10 µm	**10QE**
Glassfibre 20 µm	**20QE**

Filters with Microglass III and wire mesh elements available by request.

Table 4

SEAL TYPE	
Seal material	**CODE**
Nitrile	**B**
Fluoroelastomer	V

SPARE PARTS	
Seal kit	**CODE**
Seal material	
Nitrile	918045059
Fluoroelastomer	918045076
ECO adapter	
130M2	918042078
130M3	918042077

Table 5

INDICATORS	
Options	**CODE**
Visual indicator	**M3**
Electrical indicator	T1
Electronic indicator (PNP/N.O.)	F1
Electronic indicator (NPN/N.O.)	F2

Table 6

BYPASS VALVE	
Bypass/indicator setting	**CODE**
3.5 bar/2.5 bar	**K**

Table 7

FILTER CONNECTIONS		
Port size	**Filter type**	**CODE**
G1½	130M	G24
G2	130M, 130D	G32
SAE flange 2”-3000M	130M	R32
SAE flange 2½”-3000M	130M	**R40**
SAE flange 3”-3000M	130D	**R48**
DN80/PN16	130N, 130S	**D80**
DN100/PN16	130N, 130S	**D100**

Table 8

OPTIONS	
Options	**CODE**
Standard single	**1**
Dual 2 units	**21**
Dual 3 units	31
Parallel 1+1 units	**21**
Parallel 2+2 units	41
T-system 1+1 units	**21**
T-system 2+2 units	**41**
T-system 3+3 units	**61**
T-system 4+4 units	**81**
L-system 1+1 units	27
L-system 2+2 units	47
L-system 3+3 units	67
L-system 4+4 units	87

Please note the bolded options reflect standard options with reduced lead-time.

130S Valve Seal Kit	
Part Number	**Description**
918045062	NITRILE SEAL KIT 130S VALVE

Tel: +45 63 12 83 00 | Email: ps@hymatik.com | www.hymatik.com | Hvidkaervej 27a, DK-5250 Odense SV, Denmark

HFS and HFD Series

High Flow Single and Duplex Filters
Max. 11200 l/min. 10 bar



Heavy Duty Reliability

New High Flow Single and Duplex Filters ensure reliability in industrial, marine, and power generation applications up to DN350 and flow rates up to 11200 l/min. One filter element size allows standardisation in multi-element housings. Equalising valve eases changeover of flow direction in filter housings. Parker's angular sealing arrangement aids installation of elements.



Contact Information:

Parker Hannifin
Hydraulic Filter Division Europe

European Product Information Centre
Freephone: 00800 27 27 5374
(from AT, BE, CH, CZ, DE, EE, ES, FI, FR, IE, IT, PT, SE, SK, UK)
filtrationinfo@parker.com

www.parker.com/hfde

Applications:

- Steel industry, paper mills, marine applications and power generation
- Lubricating systems
- Fuel filtration
- Coolant filtration

Tel: +45 63 12 83 00 | Email: ps@hymatik.com | www.hymatik.com | Hvidkaervej 27a, DK-5250 Odense SV, Denmark

Specifications:

Assembly:
In-line filter as a single filter or a duplex filter. Single filters are available with connections on the same side or on opposite sides. Duplex filters are available either with a L-bore ball valve in upstream and downstream lines or with two butterfly valves in the upstream line and two flap-type check valves in the downstream line.

Maximum operating pressure:
10 bar

Nominal flow rate (30 cSt):
Up to 11200 l/min (672 m³/h).

Connections:
Flanges: DN50 – DN350 / PN10
ANSI flanges upon request.

Seal material:
Nitrile
Other seal materials upon request.

Operating temperature:
0°C...+100°C

Housing material:
Steel
Stainless steel upon request.

Weight:
See a table on page 241.

Bypass valve:
Opening pressure 3,5 bar or without a bypass.

Filter elements:
Environmentally friendly Ecoglass III.
Resin impregnated heavy duty cellulose paper
15 µm nominal.
Cleanable wire mesh.

Differential pressure indicators:
Filter can be equipped with a visual, electrical or electronic indicator with setting 2,5 bar.

Fluid compatibility:
Suitable for use with regular hydraulic and lubrication oils. For suitability with other fluids consult Parker Filtration.



Filter vessels with multiple standardized elements. Bypass valves are fixed on the center tube inside the housing.



Optional safety cover prevents opening of a pressurized housing. Vent line comes with a ball valve.



In large connection sizes the change-over is made with a hand wheel that operates two butterfly valves. Either valve is always open to ensure flow to the system.

High Flow Single Filter 700-11200

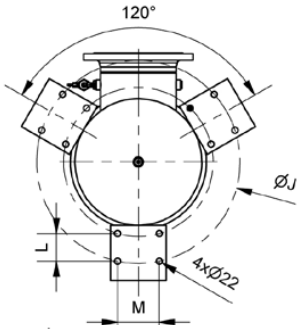

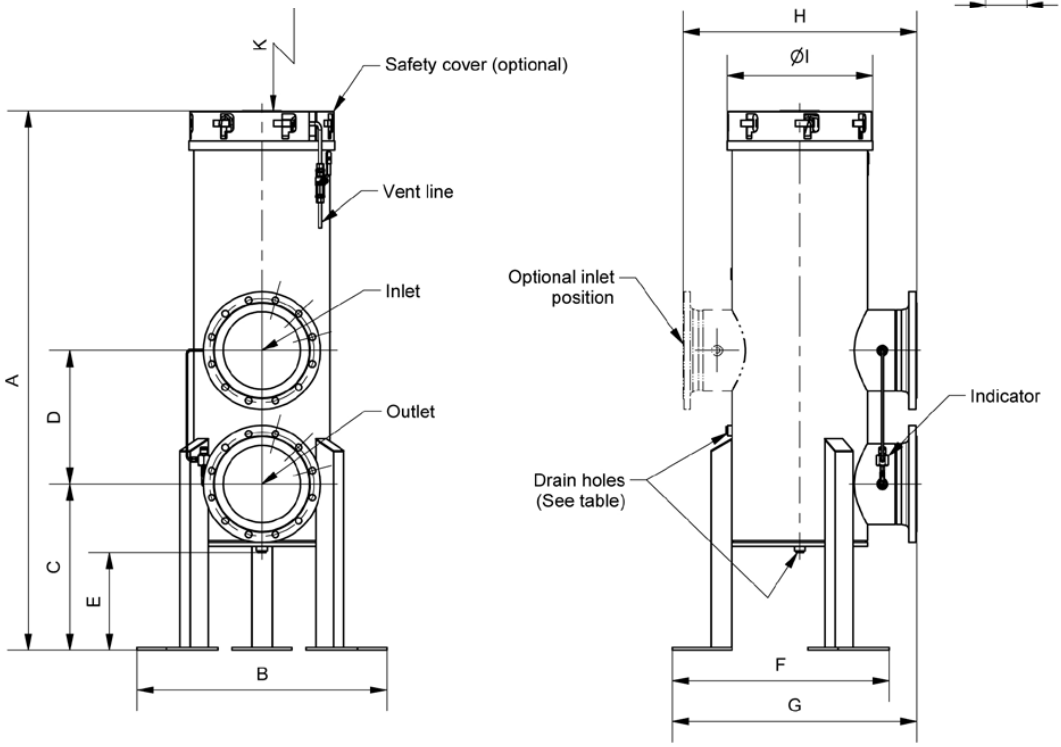

Max.Flow L/min (30cSt)	Elements		Flange size	A	B	C	D	E	F	G	H	ØI	ØJ	K	L	M
	Qty	Size														
700	1	2	DN50	985	420	320	260	232	364	455	470	250	381	500	-	40
			DN65	985	420	320	300	232	364	455	470	250	381	500	-	40
			DN80	985	420	320	320	232	364	470	500	250	381	500	-	40
1400	1	3	DN80	1534	420	355	320	282	364	470	500	250	381	950	-	40
			DN100	1534	420	365	360	282	364	472	504	250	381	950	-	40
			DN125	1534	420	385	300	282	364	475	510	250	381	950	-	40
4200	3	3	DN125	1668	798	385	300	270	691	758	710	438	683	950	100	150
			DN150	1748	798	525	365	350	691	758	710	438	683	950	100	150
			DN200	1748	798	525	365	350	691	765	724	438	683	950	100	150
5600	4	3	DN150	1817	842	515	365	341	729	809	760	490	733	950	100	150
			DN200	1817	842	525	365	341	729	816	774	490	733	950	100	150
			DN250	1818	842	560	450	329	729	822	786	490	733	950	100	150
11200	8	3	DN250	1981	1018	655	450	402	882	1088	1116	700	932	950	100	150
			DN300	1996	1018	670	515	417	882	1088	1116	700	932	950	100	150
			DN350	1966	1018	640	550	387	882	1088	1116	700	932	950	100	150

High Flow Duplex Filter 700-1400

With ballvalves

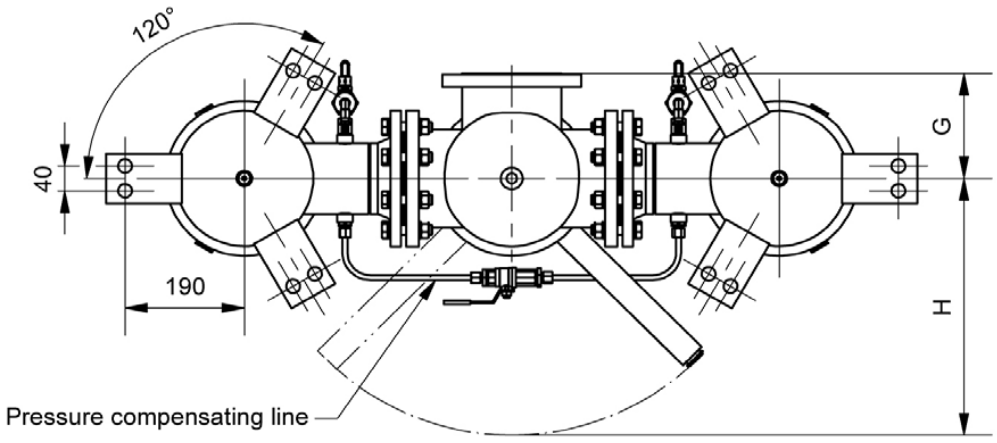

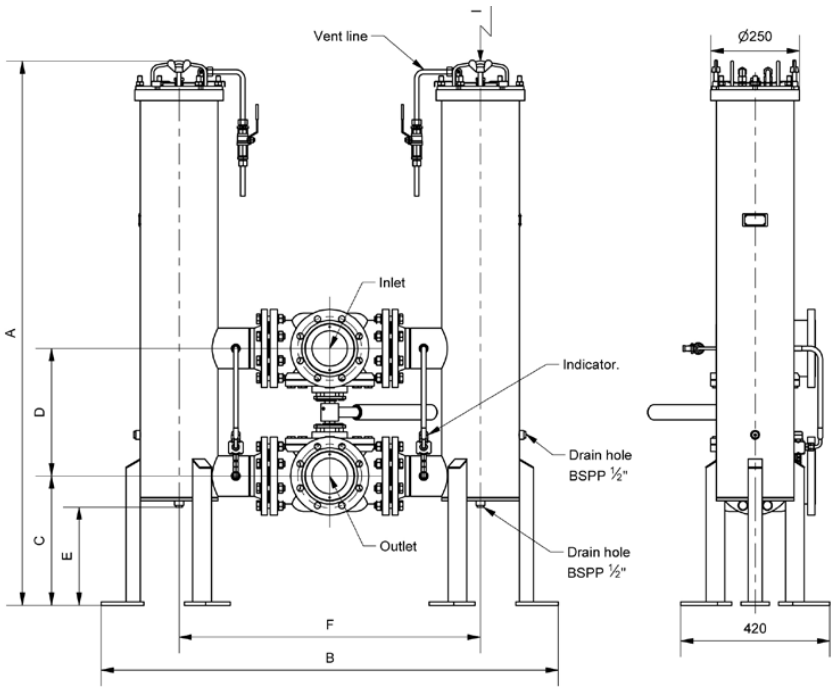

Max.Flow L/min (30cSt)	Elements		Flange size	A	B	C	D	E	F	G	H	I
	Qty	Size										
700	1	2	DN50	985	1135	260	220	232	696	110	315	500
			DN65	985	1165	300	222	232	726	125	415	500
			DN80	985	1205	355	400	232	766	130	415	500
1400	1	3	DN80	1534	1205	355	320	282	766	130	415	950
			DN100	1534	1289	365	360	282	850	170	611	950

High Flow Duplex Filter 1400-11200

With butterfly valves

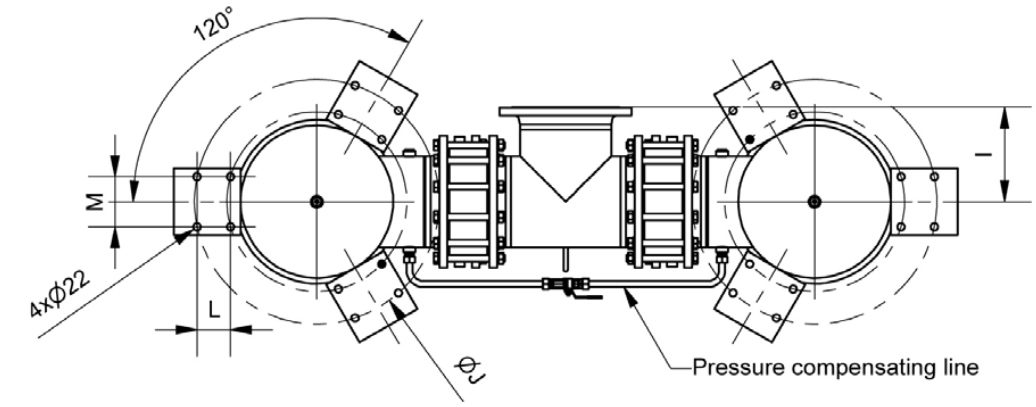

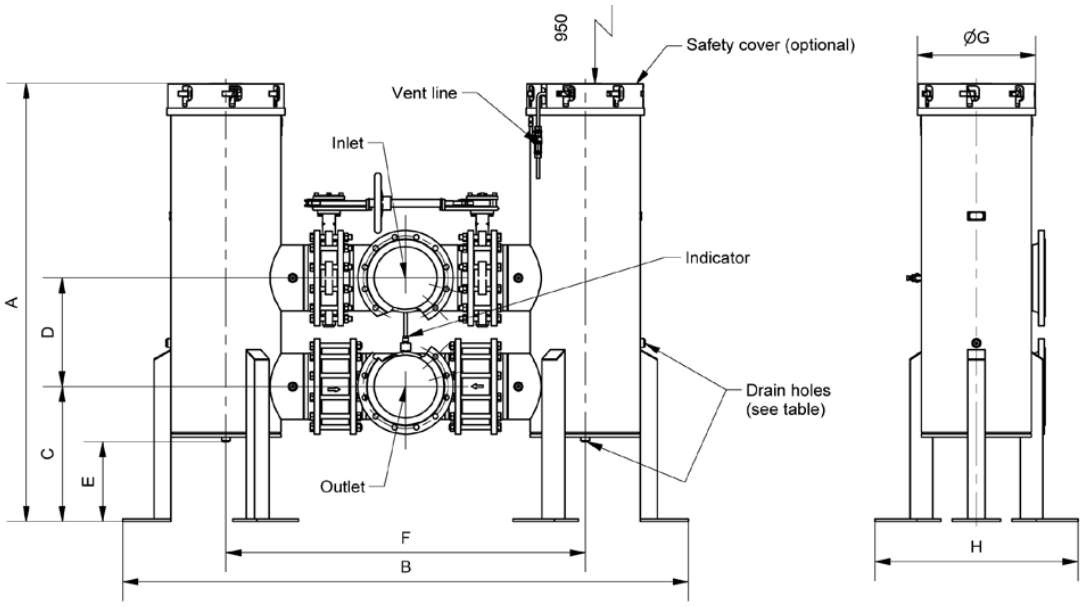

Max.Flow L/min (30cSt)	Elements		Flange size	A	B	C	D	E	F	ØG	H	I	ØJ	L	M
	Qty	Size													
1400	1	3	DN125	1534	1461	385	300	282	1022	250	420	190	381	-	40
4200	3	3	DN125	1668	2028	385	300	270	1222	438	798	190	683	100	150
			DN150	1748	2130	525	365	350	1354	438	798	271	683	100	150
			DN200	1748	2226	525	365	350	1354	438	798	278	683	100	150
5600	4	3	DN150	1817	2231	525	365	341	1439	490	842	271	733	100	150
			DN200	1817	2327	525	365	341	1507	490	842	278	733	100	150
			DN250	1818	2347	560	450	329	1491	490	842	284	733	100	150
11200	8	3	DN250	1981	2880	655	450	402	1986	700	1018	284	932	100	150
			DN300	1996	3000	670	515	417	1986	700	1018	315	932	100	150
			DN350	1966	3078	640	550	387	1986	700	1018	348	932	100	150

HFS and HFD Series

Pressure Drop Curves

$\Delta p_{total} = \Delta p_{housing} + \Delta p_{element}$

The recommended level of the initial pressure drop for the filter is maximum 0.8 bar.

Δ p-curves are measured at 30 cSt.

If the medium used has a viscosity different from 30 cSt, pressure drop over the filter can be estimated as follows:

$$\Delta p_{total} = \Delta p_{housing} + \Delta p_{element} \times \frac{\text{working viscosity}}{30\ \text{cSt}}$$

HFS/HFD12 DN80 and HFS/HFD13 DN125 (1 element) Housing dp-curves

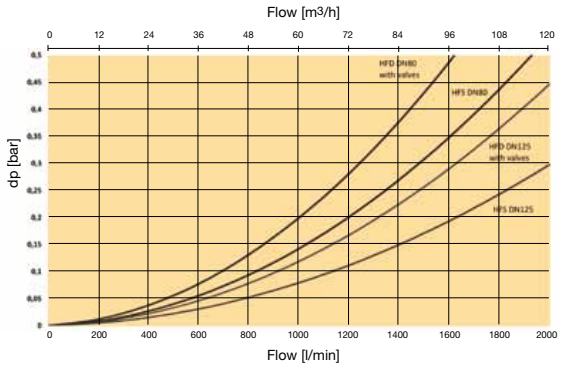

HFS/HFD33 DN200 (3 elements) Housing dp-curves

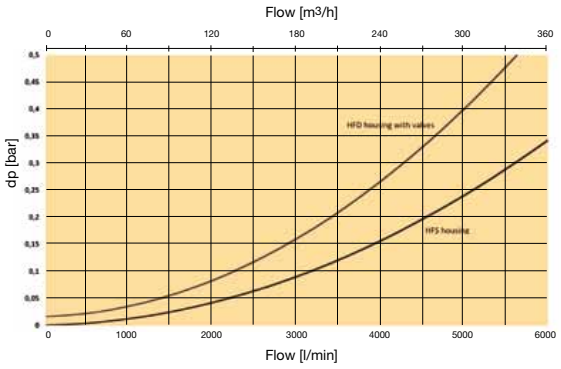

HFS/HFD43 DN250 (4 elements) Housing dp-curves

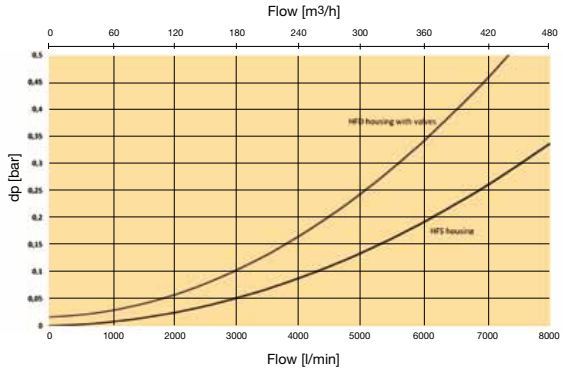

HFS/HFD83 DN350 (8 elements) Housing dp-curves

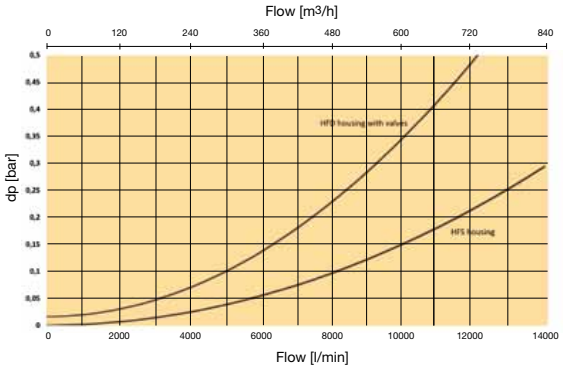

Single element: Length 2 Element dp-curves

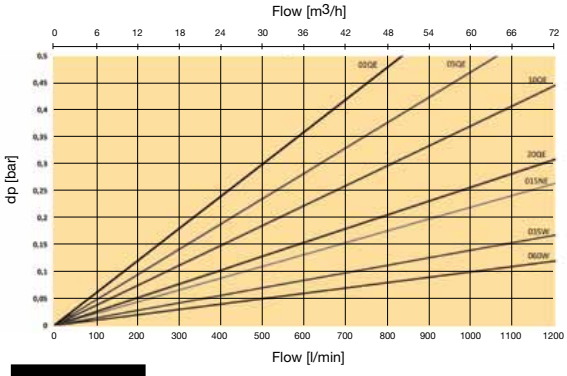

Single element: Length 3 Element dp-curves

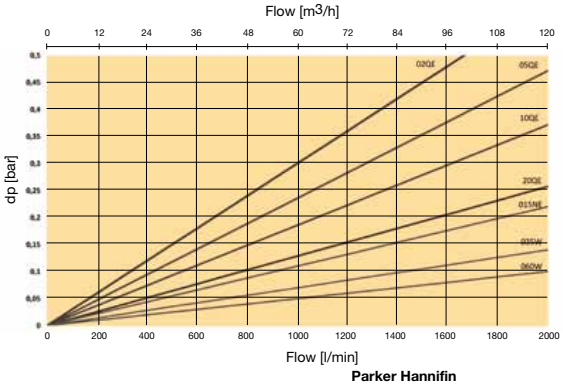

HFS/HFD33 (3 elements)
QE element dp-curves

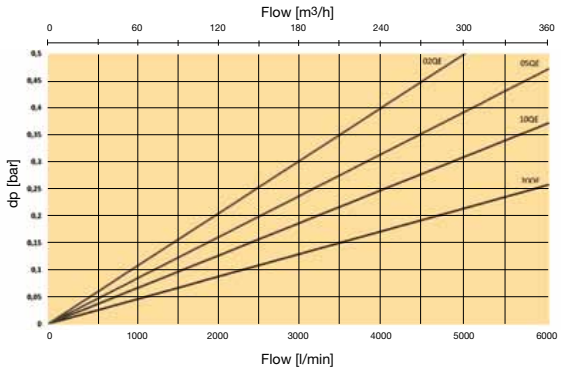

HFS/HFD43 (4 elements)
QE element dp-curves

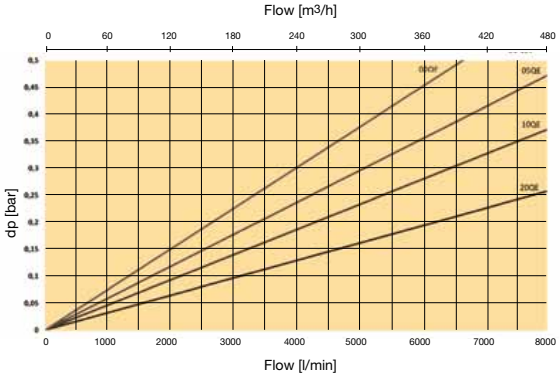

HFS/HFD83 (8 elements)
QE element dp-curves

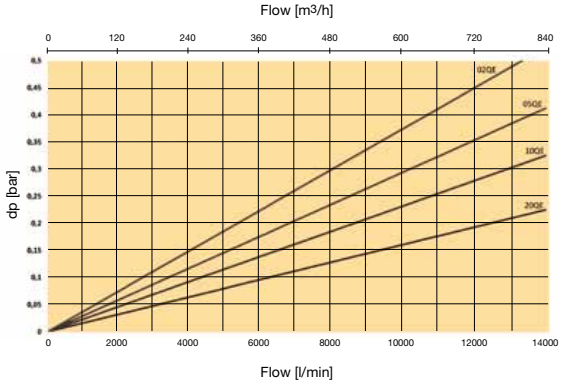

REPLACEMENT ELEMENTS WITH NITRILE SEALS		
Media	**Length 2**	**Length 3**
02QE	939240Q	939244Q
05QE	939241Q	939245Q
10QE	939242Q	939246Q
20QE	939243Q	939247Q
Metal mesh		
035W	939248	939250
060W	939249	939251

Single Filters	Mass (kg)	Duplex Filters	Mass (kg)	
11200		11200		Butterfly valves
DN350	527	DN350	1701	
DN300	518	DN300	1508	
DN250	507	DN250	1329	
5600		5600		
DN250	270	DN250	858	
DN200	264	DN200	784	
DN150	257	DN150	681	
4200		4200		
DN200	217	DN200	691	
DN150	208	DN150	589	
DN125	205	DN125	526	
1400		1400		
DN125	74	DN125	260	
DN100	69	DN100	287	Ball valves
DN80	68	DN80	236	
700		700		
DN80	53	DN80	206	
DN65	51	DN65	165	
DN50	50	DN50	111	

WARNING – USER RESPONSIBILITY
FAILURE OR IMPROPER SELECTION OR IMPROPER USE OF THE PRODUCT DESCRIBED HEREIN OR RELATED ITEMS CAN CAUSE DEATH, PERSONAL INJURY AND PROPERTY DAMAGE.

- This document and other information from Parker Hannifin Corporation, its subsidiaries and authorized distributors provide product or system options for further investigation by users having technical expertise.
- The user, through its own analysis and testing, is solely responsible for making the final selection of the system and components and assuring that all performance, endurance, maintenance, safety and warning requirements of the application are met. The user must analyze all aspects of the application , follow applicable industry standards, and follow the information concerning the product in the current product catalogue and in any other materials provided from Parker or its subsidiaries or authorized distributors.
- To the extent that Parker or its subsidiaries or authorized distributors provide component or system options based upon data or specifications provided by the user, the user is responsible for determining that such data and specifications are suitable and sufficient for all applications and reasonably foreseeable of the components or systems.

Tel: +45 63 12 83 00 | Email: ps@hymatik.com | www.hymatik.com | Hvidkaervej 27a, DK-5250 Odense SV, Denmark

HFS and HFD Series

Ordering information

Table 1	Table 2	Table 3	Table 4	Table 5	Table 6	Table 7	Table 8	Table 9	Table 10

Table 1: SERIES

Model	CODE
Single	HFS
Duplex	HFD

Table 2: HOUSING SIZE

Elements	CODE
1 element	1
3 elements	3
4 elements	4
8 elements	8

1 element vessel available with length 2 and 3
Other vessels available with length 3 only

Table 3: LENGTH

Element length	CODE
Length 2	2
Length 3	3

Table 4: MICRON RATING

Elements	CODE
Ecoglass III	
Glassfibre 2 µm	02QE
Glassfibre 5 µm	05QE
Glassfibre 10 µm	10QE
Glassfibre 20 µm	20QE
Cellulose 15 µm (nom)	015N
Metal mesh 35 µm	035W
Metal mesh 60 µm	060W

Table 5: SEALS

Seal material	CODE
Nitrile	B

Table 6: INDICATOR

Indicator	CODE
No indicator	N
Plugged indicator block	P
Visual indicator	M3
Electrical indicator	T1
Electronic indicator PNP/N.O.	F1
Electronic indicator NPN/N.O.	F2
Electronic indicator PNP/N.C.	F3
Electronic indicator NPN/N.C.	F4

Table 7: BYPASS & INDICATOR SETTING

Bypass / indicator setting	CODE
3,5 bar / 2,5 bar	K

Table 8: CONNECTIONS

Port size	Available housing size	CODE
DN50	1 element (Length 2)	D50
DN65	1 element (Length 2)	D65
DN80	1 element (Length 2 and 3)	D80
DN100	1 element (Length 3)	D100
DN125	1 element (Length 3) and 3 elements	D125
DN150	3 and 4 elements	D150
DN200	3 and 4 elements	D200
DN250	4 and 8 elements	D250
DN300	8 elements	D300
DN350	8 elements	D350

All flanges PN10

Table 9: DIRECTION OF CONNECTIONS

For HFS	CODE
On same side	C
Opposite sides	T
For HFD	**CODE**
2 x Ball valves	A
Butterfly + check valves	U

Table 10: OPTIONS

Options	CODE
Standard with bypass	1
No bypass	2
Other options	
Safety cover	C

Tel: +45 63 12 83 00 | Email: ps@hymatik.com | www.hymatik.com | Hvidkaervej 27a, DK-5250 Odense SV, Denmark

FMB

Modular Filter Manifold Block



Modular manifold – ease of installation and capacity increase

Parker FMB – filter manifold block with integrated system pressure and temperature control boasts easy to install modular design. It makes exceptionally easy to increase capacity just by adding more blocks.

Intergrated block design minimizes the risk of leakages and saves installation time. Extra benefit of compact design is low pressure drop.



Contact Information:

Parker Hannifin
Hydraulic Filter Division Europe

European Product Information Centre
Freephone: 00800 27 27 5374
(from AT, BE, CH, CZ, DE, EE, ES, FI, FR, IE, IT, PT, SE, SK, UK)
filtrationinfo@parker.com

www.parker.com/hfde

Features:

- Light weight aluminium design
- Easy to connect secondary pump – integrated non return valves
- Optional offline polishing filter

Applications:

- Wind turbine gearboxes
- Industrial gearboxes
- Industrial lube systems

Specification

Maximum operating pressure:..... 30 bar
Operating temperature:..... -20°C....+100°C
Survival temperature:..... -40°C....+100°C
Housing material:..... aluminum
Weight:
-1 filter block..... 80 kgs
-2 filter block..... 110 kgs
-extension block..... 50 kgs
Seal material:..... Nitrile
System pressure relief valve:..... Opening pressure 10, 15 or 20 bar
Thermal valve:..... Opening temperature 40°C, 45°C or 55°C
Bypass valve:..... 5 or 7 bar
Indicator options:..... Visual, electrical or electronic switch type indicator
Filtration material:
- main element..... Glassfibre Microglass III
- by pass element..... Metal mesh
Fluid compatibility:..... Suitable for use with regular hydraulic and lubricating oils.
For other fluids consult Parker Filtration

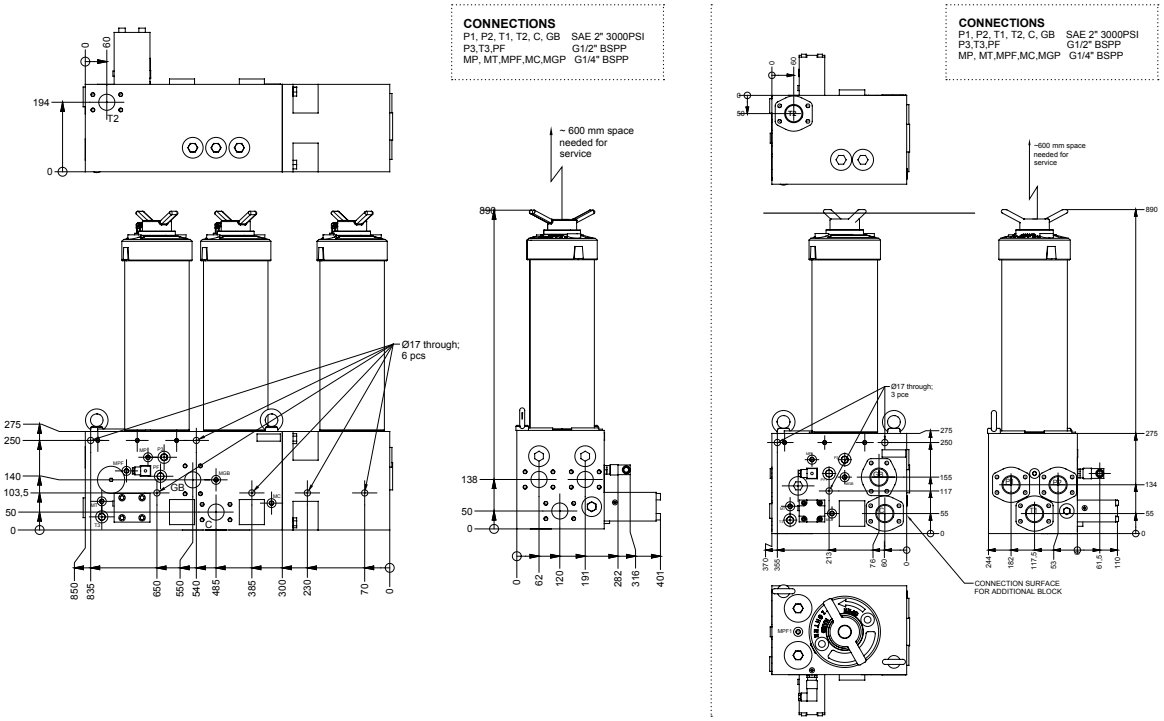

Filter Manifold Block series, product description

FMB

Filter manifold block with integrated system pressure and temperature control

1 Series	2 Length	3 Element	4 Seals	5 Indicator	6 Indicator setting
FMB					

7 Bypass setting	8 Connections	9 Pressure relief valve	10 Thermal valve

1 Series

Manifold blocks	CODE
1 main + no extension	**10**
1 main + 1 extension	11
2 main + no extension	**20**
2 main + 1 extension	21
2 main + 2 extensions	22

2 Length

Element length	CODE
Length 1	**1**
Length 2	2

3 Element

Element	CODE
Glass fibre + 50 µm mesh	
5 µm, no safety element	05QN
10 µm, no safety element	10QN
5 µm + bypass safety	**05QB**
10 µm + bypass safety	**10QB**
5 µm + full flow safety	05QF
10 µm + full flow safety	10QF

4 Seals

Seal material	CODE
Nitrile	**B**

5 Indicator

Indicator	CODE
Electrical indicator	T1
Electronic indicator PNP/N.O.	**F1**
Electronic indicator NPN/N.O.	F2
Electronic indicator PNP/N.C.	**F3**
Electronic indicator NPN/N.C.	F4

6 Indicator setting

Indicator setting	CODE
3,0 bar	**S**
5,0 bar	M

7 Bypass setting

Bypass setting	CODE
5,0 bar	**5**
7,0 bar	7

8 Connections

Port size	CODE
SAE flange 2"-3000M	**R32**

9 Pressure relief valve

Setting	CODE
No PRV valve	N
10 bar	D
15 bar	**E**
20 bar	F

10 Thermal valve

Setting	CODE
No valve	N
40...55°	**4**
45...60°	5
55...70°	6

Tel: +45 63 12 83 00 | Email: ps@hymatik.com | www.hymatik.com | Hvidkaervej 27a, DK-5250 Odense SV, Denmark

DF2145

Duplex Filters
Max. 80 l/min. 30 bar



Duplex safety for fuel, lube and hydraulic systems

Duplex operation for security and continuous flow. Several filtration media options include environmentally friendly Ecoglass III elements and allows wide selection of applications. Integrated differential pressure switch connection with shut off valve. Sturdy cast iron housing with pressure rating up to 30 bar. Block mounting available.



Contact Information:

Parker Hannifin
Hydraulic Filter Division Europe

European Product Information Centre
Freephone: 00800 27 27 5374
(from AT, BE, CH, CZ, DE, EE, ES, FI, FR, IE, IT, PT, SE, SK, UK)
filtrationinfo@parker.com

www.parker.com/hfde

Applications:

- Diesel engine fuel systems
- Industrial lube oil systems
- Industrial medium pressure hydraulic systems

Specification

Duplex filter:
Change-over valve with open center position. Handle locking device for both end positions. Vent valves with secured outlets on both sides. Integrated indicator port with test connections.
Maximum operating pressure:
30 bar
Connections:
Two sets of threads G¾ or M26 x 1.5. Connections on flange are plugged with steel plug.
Seal material:
Fluoroelastomer
Operating temperature:
-20°C...+120°C with Fluoroelastomer seals,
-20°C...+160°C with metal meash elements and Fluoroelastomer seals.
Housing material:
Cast iron (GJS)
Weight:
15 kg
Nominal flow rate (30 cSt):
80 l/min (4,8 m³/h)

Bypass valve:
Standard without bypass, optional opening pressure 3.5 bar
Filtration materials:
- Glassfibre Microglass III
- Environmentally friendly Ecoglass III. No metal parts. Ecoglass III contributes to ISO14001.
- Cleanable metall mesh
- Resin impregnated fine cellulose paper 10 µm nominal

Differential pressure indicators:
Integrated indicator port. Filter can be equipped with visual, electrical or electronic differential pressure indicator. Setting 2.5 bar, other settings available. For details see indicator options table on product description page and catalogue section 4.
Fluid compatibility:
Suitable for use with regular hydraulic and lubrication oils & light fuel oils (diesel). For heavy fuel oil applications, please specify option P2 (see table 8 in product description) which ensures that filters are delivered with documentation according PED 97/23/EC category II. For other fluids consult Parker Filtration.

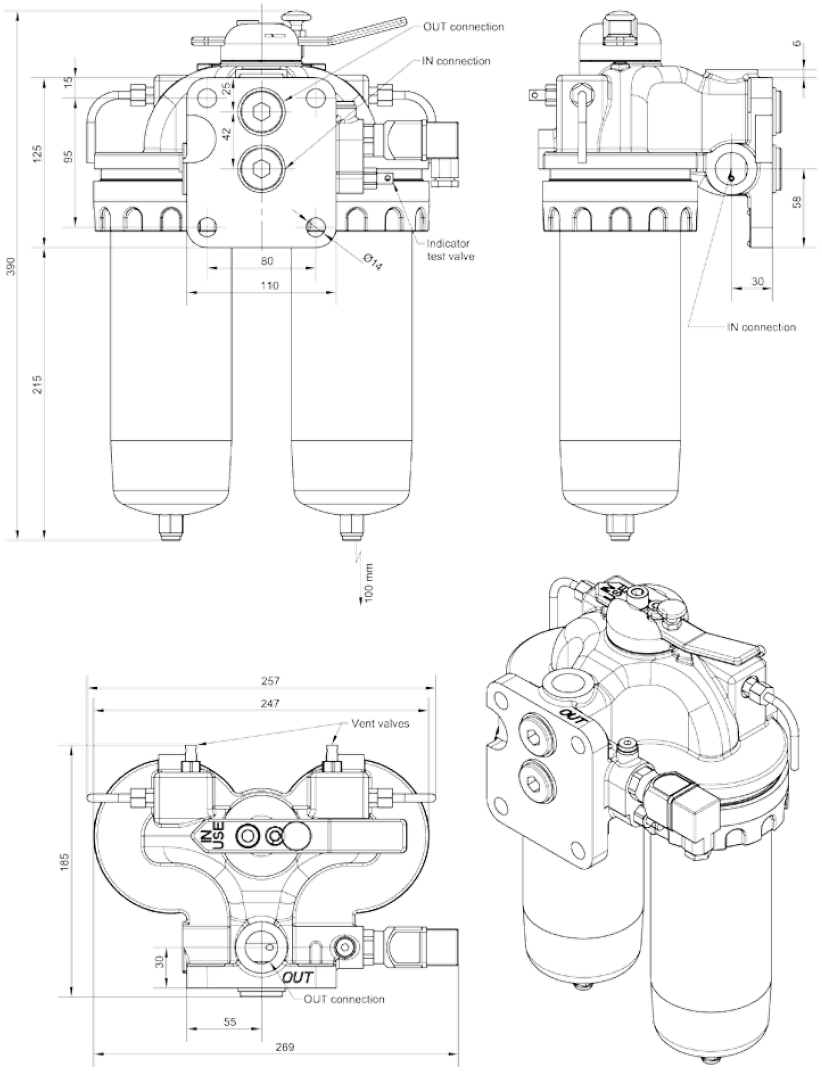

DF2145

Pressure Drop Curves

$\Delta p_{total} = \Delta p_{housing} + \Delta p_{element}$

The recommended level of the initial pressure drop for this filter is maximum 1.0 bar.

Δ p-curves are measured at 30 cSt.

If the medium used has a viscosity different from 30 cSt, pressure drop over the element can be estimated as follows:

$$\Delta p_{total} = \Delta p_{housing} + \Delta p_{element} \times \frac{\text{working viscosity}}{30\ \text{cSt}}$$

DF2145 housing

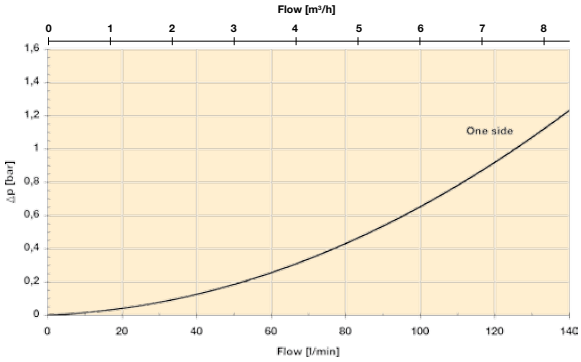

DF2145 length 2 elements

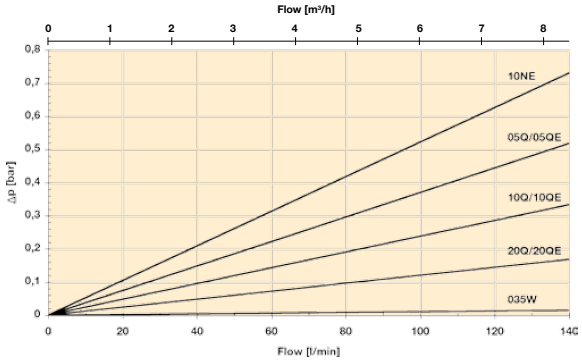

REPLACEMENT ELEMENTS WITH FLUOROELASTOMER SEALS		
Media code	**Order code**	
Glassfibre	**Microglass III**	**Ecoglass III**
05Q/05QE	939011Q	939014Q
10Q/10QE	**939012Q**	**939015Q**
20Q/20QE	**939013Q**	**939016Q**
Cellulose (Eco)		
NE10	939017	
Cleanable metal mesh		
035W	939018	
060W	939019	

Tel: +45 63 12 83 00 | Email: ps@hymatik.com | www.hymatik.com | Hvidkaervej 27a, DK-5250 Odense SV, Denmark

Product Description for DF2145

Complete Filter:

Table 1	Table 2	Table 3	Table 4	Table 5	Table 6	Table 7	Table 8

Table 1

FILTER TYPE	
Model	**CODE**
Duplex filter	**DF2145**

Table 2

FILTER SIZE	
Element length	**CODE**
Length 2	**2**

Table 3

DEGREE OF FILTRATION	
Element type	**CODE**
Microglass III	
Glassfibre 5 µm	05Q
Glassfibre 10 µm	**10Q**
Glassfibre 20 µm	**20Q**
Ecoglass III	
Glassfibre 5 µm	05QE
Glassfibre 10 µm	**10QE**
Glassfibre 20 µm	**20QE**
Other medias	
Cellulose 10 µm (nom) ECO	10NE
Cleanable metal mesh 35 µm	035W
Cleanable metal mesh 60 µm	060W

Table 4

SEAL TYPE	
Seal material	**CODE**
Fluoroelastomer	**V**

SPARE PARTS	
Seal kits (fluoroelastomer)	**CODE**
Complete seal kit (includes also valve spool seals)	916045088
Service seal kit (includes seals for bowl, drain and Eco-adapter)	916045093
ECO adapter	
For Ecoglass III and 10NE elements	911042096

Table 5

INDICATORS	
Options	**CODE**
Indicator port plugged	**P**
Visual indicator	**M3**
Electrical indicator	**T1**
Electronic indicator (PNP/N.O.)	F1
Electronic indicator (NPN/N.O.)	F2

Table 6

BYPASS VALVE	
Bypass/indicator setting	**CODE**
3.5 bar/2.5 bar	**K**
No/No	**X**

Table 7

FILTER CONNECTIONS	
Port size	**CODE**
G¾	**G12**
M26x1.5	M26

Table 8

OPTIONS	
Options	**CODE**
With bypass	1
No bypass	**2**
PED category 2	P2

If several options are selected, please add the codes in order listed above.

Please note the bolded options reflect standard options with reduced lead-time.

Tel: +45 63 12 83 00 | Email: ps@hymatik.com | www.hymatik.com | Hvidkaervej 27a, DK-5250 Odense SV, Denmark

DFBO Series

Duplex Fuel Filters
Max. 90 l/min. 10 bar



Continuous diesel filtration in Marine applications with DFBO duplex filter:

The new DFBO duplex filter brings Racor® FBO filters to engine room environment. The new duplex design ensures that fuel is efficiently filtered all the time. The cast iron head and steel bowls mean that it can be used in Marine applications.

The DFBO comes with two bowl lengths allowing diesel flows up to 90 l/min. Depending on the elements inside the unit can be used as a prefilter, a water separator/particle filter or a water absorptive filter. Easy service, no special tools are required.



Contact Information:

Parker Hannifin
Hydraulic Filter Division Europe

European Product Information Centre
Freephone: 00800 27 27 5374
(from AT, BE, CH, CZ, DE, EE, ES, FI, FR, IE, IT, PT, SE, SK, UK)
filtrationinfo@parker.com

www.parker.com/hfde

Applications:

- Fuel systems on diesel engines
- Marine fuel docks
- Diesel fuel dispensing system

Specification

Duplex filter:
Change-over valve with open center position. Locking device for both end positions and center position. Manual vent valves and drain valves.
Maximum operating pressure:
10 bar (Marine assemblies 7 bar)
Connections:
Threaded ports M30 x 1,5 or optionally G1" facing downwards.
Seal material:
Fluoroelastomer
Operating temperature:
0°C...+80°C (Marine assemblies 0°C...+60°C), for other temperatures consult Parker Filtration.

Housing material:
Head material cast iron, bowl material steel.
Weight:
40 kg
Nominal flow rate (3 cSt):
DFBO-10: 70 l/min (4.2 m^3/h)
DFBO-14: 90 l/min (5.4 m^3/h)
Bypass valve:
No bypass
Filter elements:
Filter separator elements with micron ratings 10 µm and 25 µm remove water and contaminants from fuel streams. Other types of FBO elements and other ratings are available, see replacement element table on the following page.
Fluid compatibility:
Suitable for use with diesel fuel, jet fuel, gasoline, kerosene, JP4, JP5 and JP8.

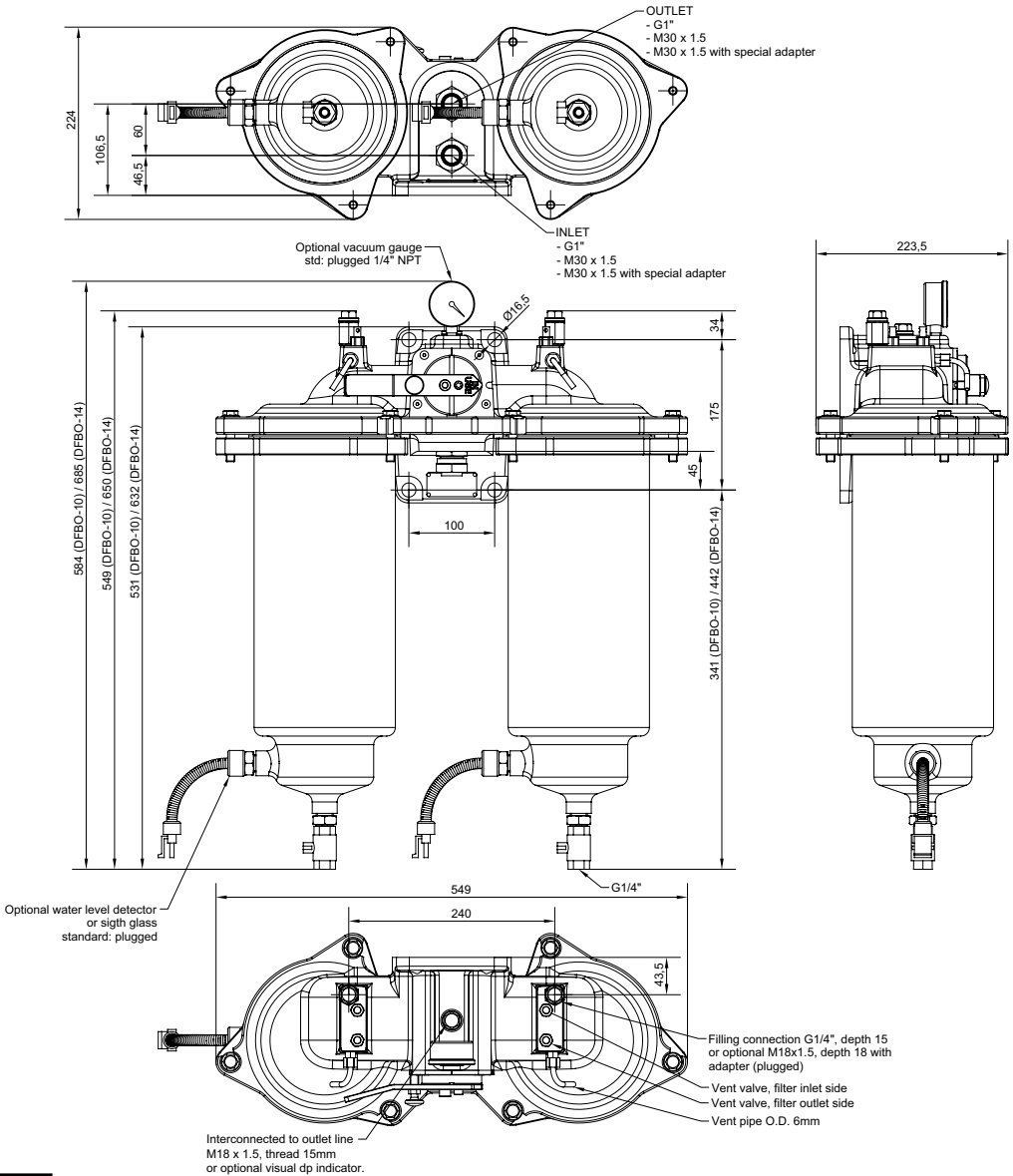

Tel: +45 63 12 83 00 | Email: ps@hymatik.com | www.hymatik.com | Hvidkaervej 27a, DK-5250 Odense SV, Denmark

Product Description for DFBO

Complete Filter:

Table 1	Table 2	Table 3	Table 4	Table 5	Table 6	Table 7	Table 8

Table 1

FILTER TYPE	
Model	**CODE**
Duplex filter	**DFBO**

Table 2

FILTER SIZE	
Element length	**CODE**
Length 10”	**10**
Length 14”	**14**

Table 3

MICRON RATING	
Filter separator element	**CODE**
Rating 10 µm	**10FS**
Rating 25 µm	25FS
Without elements	XXX

Table 4

SEAL TYPE	
Seal material	**CODE**
Fluoroelastomer	**V**

Table 5

INDICATORS	
Options	**CODE**
Indicator port plugged	P
Vacum gauge in outlet side	**A**

Table 6

INDICATOR SETTING	
Options	**CODE**
No indicator	X
1,0 bar (15 psi)	**F**

Table 7

FILTER CONNECTIONS	
Port size	**CODE**
M30 x 1,5 connections down	**MD30**
G1” - connections down	GD16

Table 8

OPTIONS	
Options	**CODE**
Standard	**1**
Sight level glass in bowl	SG
Water level probe in bowl	WP
Marine assembly (max 7 bar)	MA

Max flow rate [l/min] with marine diesel oil at 3 cSt	One side in use		Both sides in use	
	10 micron	25 micron	10 micron	25 micron
DFBO-10	**10FS**	**25FS**	**10FS**	**25FS**
Vacuum side Pressure side	45 70	45 70	60 100	60 100
DFBO-14	**10FS**	**25FS**	**10FS**	**25FS**
Vacuum side Pressure side	60 90	60 90	80 130	80 130

All FBO elements fit in DFBO filter. Check the suitable replacement element from this table.

Element	Micron	Filter Separator	Pre-Filter	Water Absorber
FBO-10	1	FBO 60327	FBO 60330	FBO 60333
	5	FBO 60328	FBO 60331	FBO 60334
	10	FBO 60353	FBO 60354	FBO 60355
	25	FBO 60329	FBO 60332	FBO 60335
FBO-14	1	FBO 60336	FBO 60339	FBO 60342
	5	FBO 60337	FBO 60340	FBO 60343
	10	FBO 60356	FBO 60357	FBO 60358
	25	FBO 60338	FBO 60341	FBO 60344

Tel: +45 63 12 83 00 | Email: ps@hymatik.com | www.hymatik.com | Hvidkaervej 27a, DK-5250 Odense SV, Denmark

DF40

Duplex Filters
Max. 200 l/min. 40 bar



Cast iron duplex filter for Marine applications:

The new DF40 duplex filter gives you extra flexibility in installation because it can be serviced from the top or the bottom. The durable cast iron housing makes it an especially good fit for engine room applications.

The DF40 with flow up to 200 l/min and pressure up to 40 bar contains Eco elements which help to save the environment and reduce the customer's disposal costs as no metal parts are included. This filter also disposes of a double indicator port and test connections which can be isolated with shut-off valves for possible assembly and maintenance.



Contact Information:

Parker Hannifin
Hydraulic Filter Division Europe

European Product Information Centre
Freephone: 00800 27 27 5374
(from AT, BE, CH, CZ, DE, EE, ES, FI, FR, IE, IT, PT, SE, SK, UK)
filtrationinfo@parker.com

www.parker.com/hfde

Applications:

- Fuel filter for diesel engines up to 10 MW
- Lubrication filter for gearboxes and propulsion systems
- Medium pressure duplex filter in hydraulic systems
- In-line return duplex filter in hydraulic systems

Specification

Duplex filter:
Change-over valve with open center position. Locking device for both end positions. Element change is possible by opening either the top cover or the bowl in the bottom. Safety guards ensure that pressure is released prior opening the filter.
Maximum operating pressure:
40 bar
Connections:
Flanges SAE 1½" 3000-M as standard. Optional thread connections G1½ and G1¼ available with flange adapters.
Seal material:
Fluoroelastomer
Operating temperature:
-20°C...+120°C with Fluoroelastomer seals,
-20°C...+160°C with metal mesh elements and Fluoroelastomer seals.
Housing material:
Cast iron (GJS)
Weight:
52 kg
Nominal flow rate (30 cSt):
200 l/min (12 m^3/h)

Bypass valve:
Standard without bypass, optional opening pressure 3.5 bar
Indicators:
Integrated indicator port. Filter can be equipped with visual, electrical or electronic differential pressure indicator. Setting 2.5 bar, other settings available. Additional indicator port and isolation valves which also enable indicator testing are available by request. For details see indicator options table on product description page and catalogue section 4.
Filter elements:
- Environmentally friendly Ecoglass III elements, micron ratings(abs): 2 µm, 5 µm, 10 µm and 20 µm. Ecoglass III elements contribute to ISO14001 because they do not include metal parts.
- Glassfibre Microglass III elements, micron ratings(abs): 2 µm, 5 µm, 10 µm and 20 µm.
- Cleanable metal mesh elements, micron ratings(abs): 35 µm and 60 µm

Fluid compatibility:
Suitable for use with regular hydraulic and lubrication oils & light fuel oils. For heavy fuel oils and other fluids consult Parker Filtration.

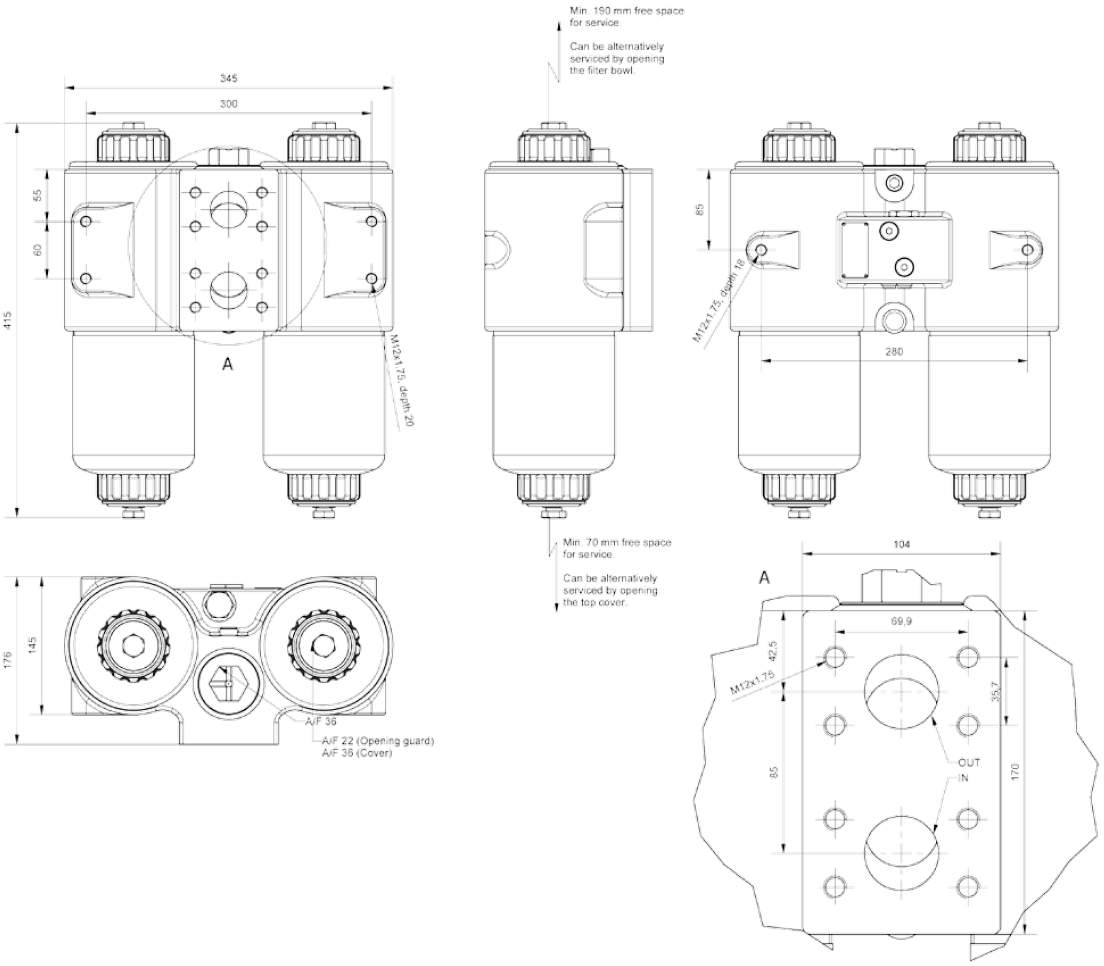

DF40

Pressure Drop Curves

$$\Delta p_{total} = \Delta p_{housing} + \Delta p_{element}$$

The recommended level of the initial pressure drop for this filter is maximum 1.0 bar.

Δ p-curves are measured at 30 cSt.

If the medium used has a viscosity different from 30 cSt, pressure drop over the element can be estimated as follows:

$$\Delta p_{total} = \Delta p_{housing} + \Delta p_{element} \times \frac{\text{working viscosity}}{30\ \text{cSt}}$$

DF40 housing

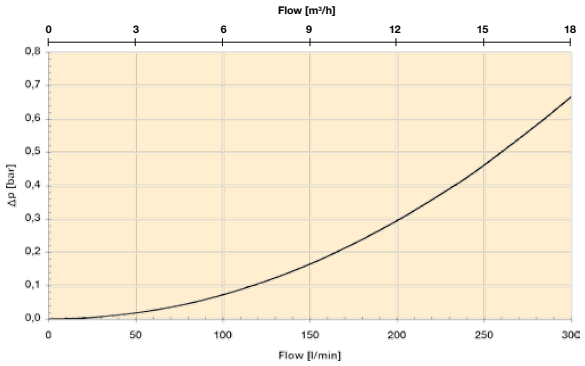

DF40 elements

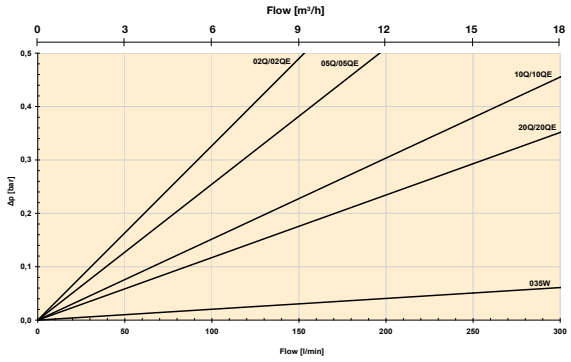

REPLACEMENT ELEMENTS WITH FLUOROELASTOMER SEALS		
Media code	**Order code**	
Glassfibre	**Microglass III**	**Ecoglass III**
02Q/02QE	939200Q	939204Q
05Q/05QE	939201Q	939205Q
10Q/10QE	939202Q	**939206Q**
20Q/20QE	939203Q	**939207Q**
Cleanable metal mesh		
035W	939208	
060W	939209	

SPARE PARTS	
Seal kit (fluoroelastomer)	**CODE**
For spool valve	939215

Seals needed in element service are included in Parker original replacement element package.

Tel: +45 63 12 83 00 | Email: ps@hymatik.com | www.hymatik.com | Hvidkaervej 27a, DK-5250 Odense SV, Denmark

Product Description for DF40

Complete Filter:

Table 1	Table 2	Table 3	Table 4	Table 5	Table 6	Table 7	Table 8

Table 1

FILTER TYPE	
Model	**CODE**
Duplex filter	**DF40**

Table 2

FILTER SIZE	
Element length	**CODE**
Length 1	**1**

Table 3

DEGREE OF FILTRATION	
Element type	**CODE**
Microglass III	
Glassfibre 2 µm	02Q
Glassfibre 5 µm	05Q
Glassfibre 10 µm	10Q
Glassfibre 20 µm	20Q
Ecoglass III	
Glassfibre 2 µm	02QE
Glassfibre 5 µm	05QE
Glassfibre 10 µm	**10QE**
Glassfibre 20 µm	**20QE**
Other medias	
Cleanable metal mesh 35 µm	035W
Cleanable metal mesh 60 µm	060W

Table 4

SEAL TYPE	
Seal material	**CODE**
Fluoroelastomer	**V**

Table 5

INDICATORS	
Options	**CODE**
Indicator port plugged	**P**
Visual indicator	**M3**
Electrical indicator	**T1**
Electronic indicator (PNP/N.O.)	F1
Electronic indicator (NPN/N.O.)	F2

Table 6

BYPASS VALVE	
Bypass/indicator setting	**CODE**
3.5 bar/2.5 bar	**K**
No/No	X

Table 7

FILTER CONNECTIONS	
Port size	**CODE**
SAE flange 1½" 3000-M	**R24**
G 1¼ with adaptor	G20
G 1½ with adaptor	G24

Table 8

OPTIONS	
Options	**CODE**
With bypass	1
No bypass	**2**
No safety covers, with bypass	N1
No safety covers, no bypass	N2
HFO use, no bypass, max. pressure 30 bar	H2

Please note the bolded options reflect standard options with reduced lead-time.

Tel: +45 63 12 83 00 | Email: ps@hymatik.com | www.hymatik.com | Hvidkaervej 27a, DK-5250 Odense SV, Denmark

DF2089

Duplex Filters
Max. 350 l/min. 30 bar



Heavy duty duplex operation

Cast iron housing with pressure rating up to 40 bar features in-to out flow to keep the particles away even during the filter change. Differential pressure switch mounted on the filter for easy access. Several media options allow lube, fuel and hydraulic use – pre-filtration with magnets as option.



Contact Information:

Parker Hannifin
Hydraulic Filter Division Europe

European Product Information Centre
Freephone: 00800 27 27 5374
(from AT, BE, CH, CZ, DE, EE, ES, FI, FR, IE, IT, PT, SE, SK, UK)
filtrationinfo@parker.com

www.parker.com/hfde

Applications:

- Propulsion system lube oil filter
- Heavy fuel oil safety filter
- Medium pressure hydraulic systems

Tel: +45 63 12 83 00 | Email: ps@hymatik.com | www.hymatik.com | Hvidkaervej 27a, DK-5250 Odense SV, Denmark

Specification

Duplex filter:
One reservoir can be closed for service, vertical installation.
Connections:
Square flanges with port size 60 mm. Standard delivery includes blind counter flanges. Optionally available with SAE 2"-3000M flange adapters.
Maximum operating pressure:
30 bar
Seal material:
Fluoroelastomer
Operating temperature:
-20°C...+120°C with Fluoroelastomer seals,
-20°C...+160°C with metal mesh elements and Fluoroelastomer seals.
Housing material:
Cast iron (GJS)
Weight:
65 kg

Nominal flow rate (30 cSt):
350 l/min (21 m³/h)
Bypass valve:
Standard bypass opening pressure 2.0 bar, optional opening pressure 1.6 bar or blocked bypass
Indicator options:
Visual, electrical or electronic indicator requires an indicator block. For details see indicator options table in product description page and catalogue section 4.
Filtration materials:
- Glassfibre Microglass III
- Cleanable metal mesh

Fluid compatibility:
Suitable for use with regular hydraulic and lubrication oils and fuel oils. Filters are delivered with documentation according PED 97/23/EC category II (required for heavy fuel oils). For other fluids consult Parker Filtration.

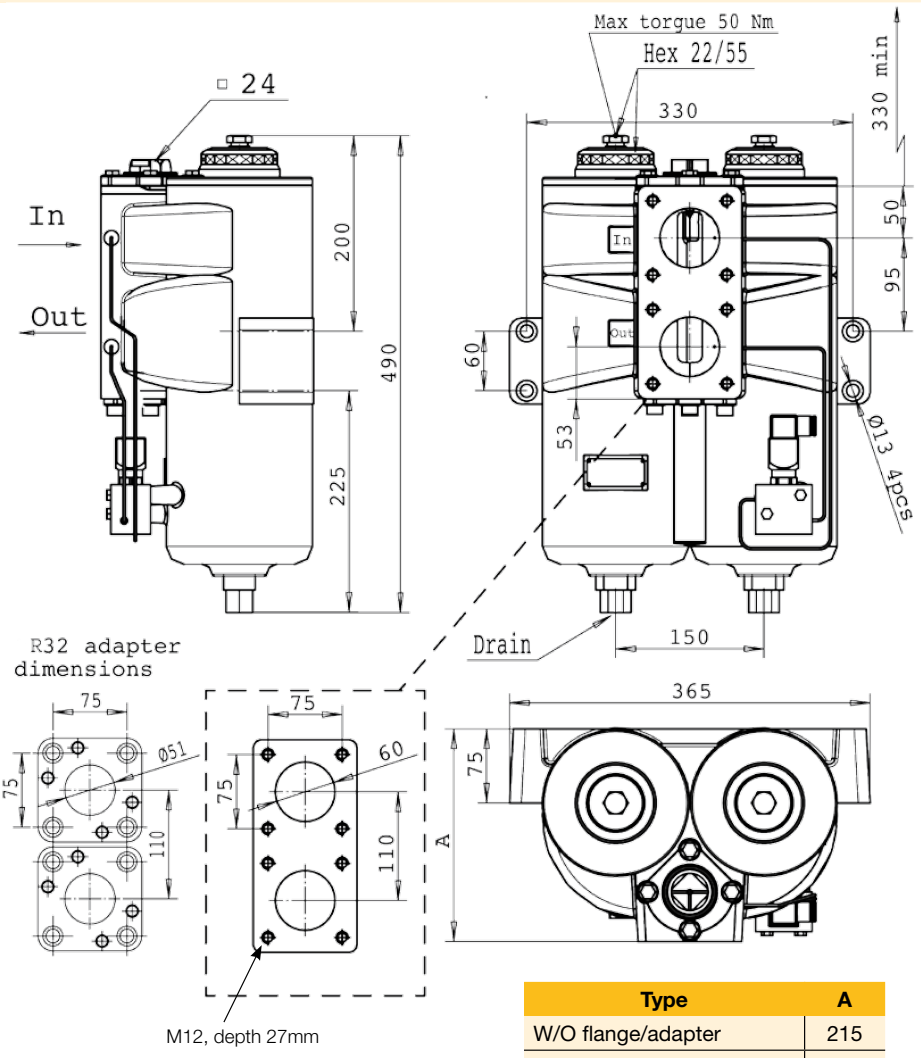

Type	A
W/O flange/adapter	215
With X60 flange	232
With R32 adapter	245

Parker Hannifin
Hydraulic Filter Division Europe
FDHB500UK/DF2089

DF2089

Pressure Drop Curves

$\Delta p_{total} = \Delta p_{housing} + \Delta p_{element}$

The recommended level of the initial pressure drop for this filter is maximum 0.5 bar.

Δ p-curves are measured at 30 cSt.

If the medium used has a viscosity different from 30 cSt, pressure drop over the element can be estimated as follows:

$$\Delta p_{total} = \Delta p_{housing} + \Delta p_{element} \times \frac{\text{working viscosity}}{30\ \text{cSt}}$$

DF2089 housing

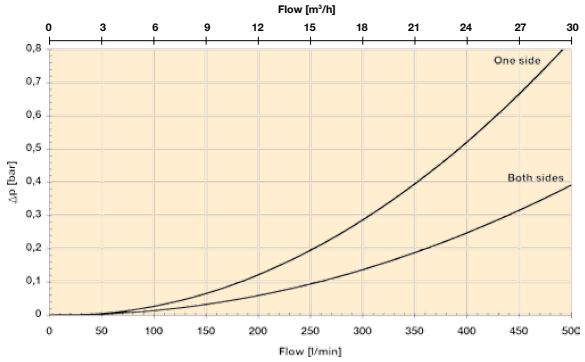

DF2089 elements/one side

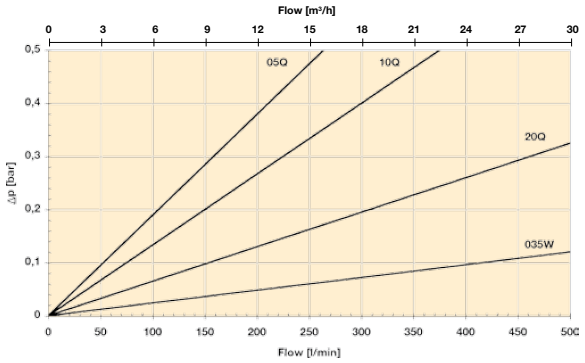

DF2089 elements/both sides

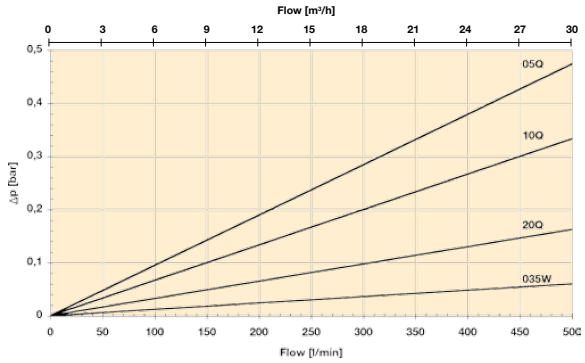

Tel: +45 63 12 83 00 | Email: ps@hymatik.com | www.hymatik.com | Hvidkaervej 27a, DK-5250 Odense SV, Denmark

Product Description for DF2089

Complete Filter:

Table 1	Table 2	Table 3	Table 4	Table 5	Table 6	Table 7	Table 8

Table 1

FILTER TYPE	
Model	**CODE**
Duplex filter	**DF2089**

Table 2

FILTER SIZE	
Element length	**CODE**
Length 1	**1**

Table 3

DEGREE OF FILTRATION	
Element type	**CODE**
Microglass III	
Glassfibre 5 µm	05Q
Glassfibre 10 µm	**10Q**
Glassfibre 20 µm	**20Q**
Other medias	
Cleanable metal mesh 35 µm	035W
Cleanable metal mesh 60 µm	060W

Table 4

SEAL TYPE	
Seal material	**CODE**
Fluoroelastomer	**V**

Table 5

INDICATORS	
Options	**CODE**
No indicator block	**N**
Indicator port plugged	P
Visual indicator	**M3**
Electrical indicator	**T1**
Electronic indicator (PNP/N.O.)	F1
Electronic indicator (NPN/N.O.)	F2

Table 6

BYPASS VALVE	
Bypass/indicator setting	**CODE**
1.6 bar/1.0 bar	F
2.0 bar/1.5 bar	**H**
No/No	X

Table 7

FILTER CONNECTIONS	
Port size	**CODE**
Square flange 60 mm	**X60**
Flange adapter SAE 2”-3000M	R32

Table 8

OPTIONS	
Options	**CODE**
With bypass, no magnets	**1**
No bypass, no magnets	2
With bypass and magnets	3
No bypass, with magnets	4

REPLACEMENT ELEMENTS WITH FLUOROELASTOMER SEALS	
Media code	**Order code**
Glassfibre	**Microglass III**
05Q	938364Q
10Q	**938075Q**
20Q	**938005Q**
Cleanable metal mesh	
035W	939184
060W	939185

SPARE PARTS	
Seal kit	**CODE**
Seal material	
Fluoroelastomer	916045077

Please note the bolded options reflect standard options with reduced lead-time.

Tel: +45 63 12 83 00 | Email: ps@hymatik.com | www.hymatik.com | Hvidkaervej 27a, DK-5250 Odense SV, Denmark

DF60

Duplex Filters
Max. 350 l/min. 30 bar



Heavy duty lubrication

This heavy duty lubrication filter offers maximum performance especially in those applications using high viscosity lubricating oil. Filtration area has been enlarged to minimize element pressure drop. A perfect choice for a gearbox lubrication system where duplex filter is needed for continuous operation.



Contact Information:

Parker Hannifin
Hydraulic Filter Division Europe

European Product Information Centre
Freephone: 00800 27 27 5374
(from AT, BE, CH, CZ, DE, EE, ES, FI, FR, IE, IT, PT, SE, SK, UK)
filtrationinfo@parker.com

www.parker.com/hfde

Applications:

- Gearbox lube oil filter
- Turbine lubrication systems
- Medium pressure hydraulic systems

Tel: +45 63 12 83 00 | Email: ps@hymatik.com | www.hymatik.com | Hvidkaervej 27a, DK-5250 Odense SV, Denmark

Specification

Duplex filter:
One reservoir can be closed for service, vertical installation.
Connections:
Square flanges with port size 60 mm. Standard delivery includes blind counter flanges. Optionally available with SAE 2”-3000M flange adapters.
Maximum operating pressure:
30 bar
Seal material:
Fluoroelastomer
Operating temperature:
-20°C...+120°C with Fluoroelastomer seals,
-20°C...+160°C with metal mesh elements and Fluoroelastomer seals
Housing material:
Cast iron (GJS)

Weight:
65 kg
Nominal flow rate (30 cSt):
350 l/min (21 m³/h)
Bypass valve:
Standard bypass opening pressure 3.5 bar, optional opening pressure 1.7 bar or blocked bypass
Indicator options:
Visual, electrical or electronic indicator requires an indicator block. For details see indicator options table in product description page.
Filtration materials:
- Glassfibre Microglass III
- Cleanable metal mesh

Fluid compatibility:
Suitable for use with regular hydraulic and lubricating oils and diesel oil. For other fluids consult Parker Filtration.

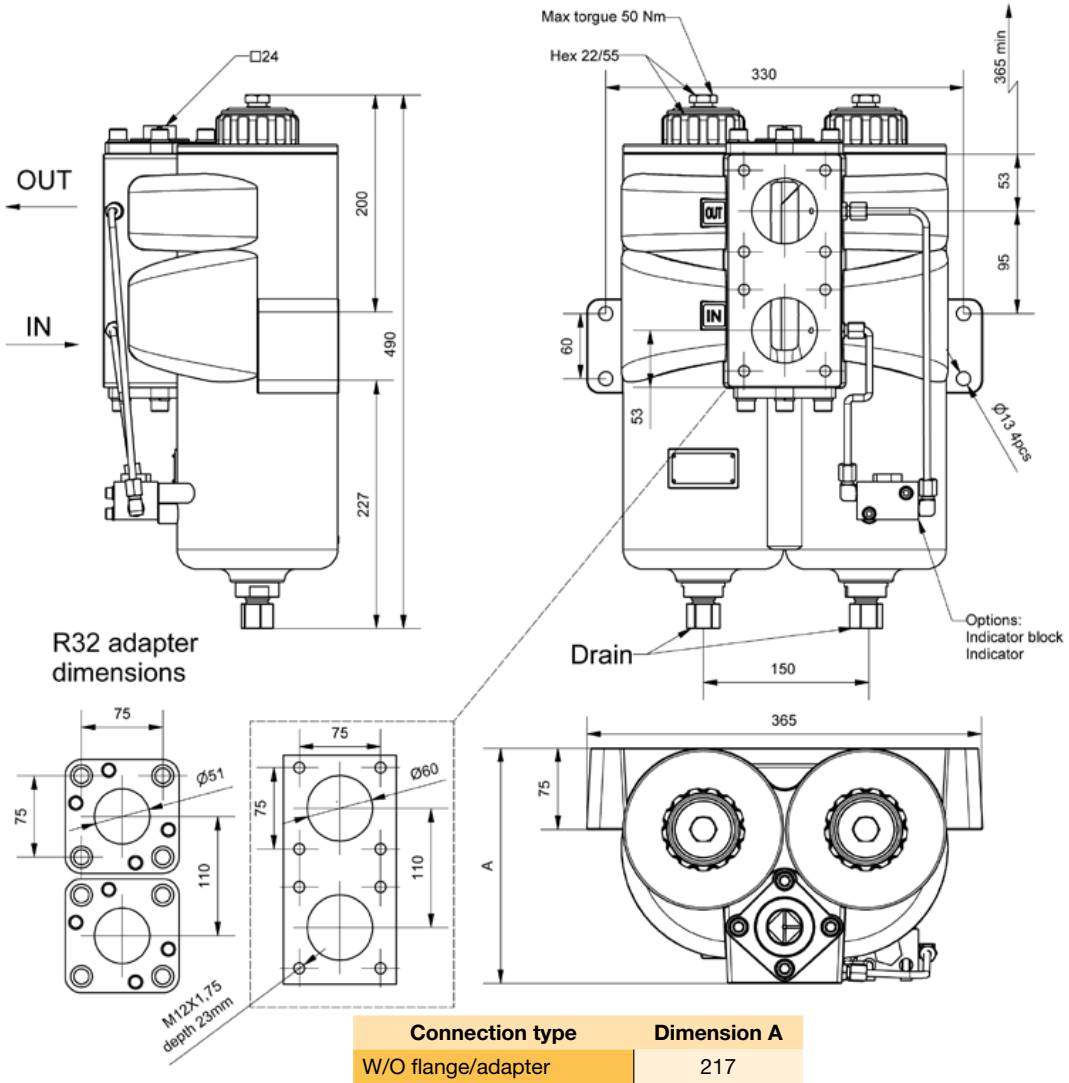

Connection type	Dimension A
W/O flange/adapter	217
With X60 flange	233
With R32 adapter	246

Tel: +45 63 12 83 00 | Email: ps@hymatik.com | www.hymatik.com | Hvidkaervej 27a, DK-5250 Odense SV, Denmark

DF60

Pressure Drop Curves

$\Delta p_{total} = \Delta p_{housing} + \Delta p_{element}$

The recommended level of the initial pressure drop for this filter is maximum 0.5 bar.

Δ p-curves are measured at 30 cSt.

If the medium used has a viscosity different from 30 cSt, pressure drop over the element can be estimated as follows:

$$\Delta p_{total} = \Delta p_{housing} + \Delta p_{element} \times \frac{\text{working viscosity}}{30\ \text{cSt}}$$

DF60 housing + element adapter

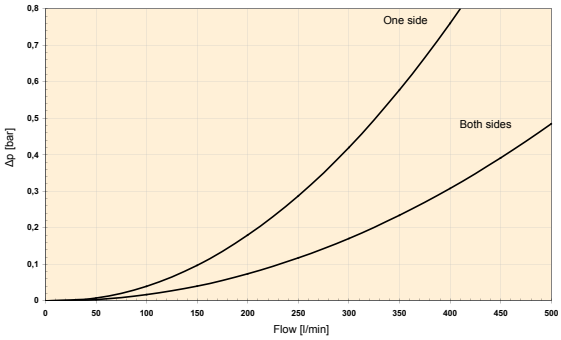

DF60 elements / one side

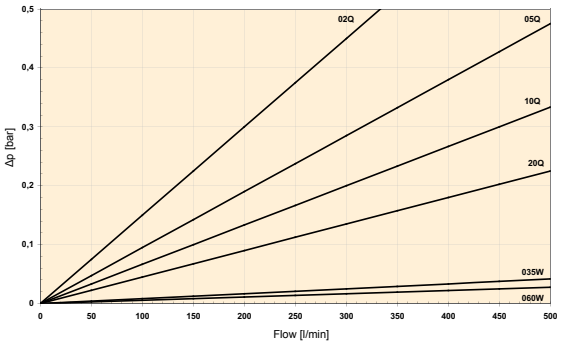

DF60 elements / both sides

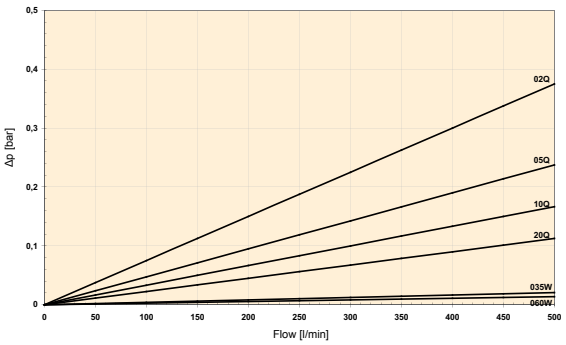

Tel: +45 63 12 83 00 | Email: ps@hymatik.com | www.hymatik.com | Hvidkaervej 27a, DK-5250 Odense SV, Denmark

Product Description for DF60

Complete Filter:

Table 1	Table 2	Table 3	Table 4	Table 5	Table 6	Table 7	Table 8

Table 1

FILTER TYPE	
Model	**CODE**
Duplex filter	**DF60**

Table 2

FILTER SIZE	
Element length	**CODE**
Length 1	**1**

Table 3

DEGREE OF FILTRATION	
Element type	**CODE**
Microglass III	
Glassfibre 2 µm	02Q
Glassfibre 5 µm	05Q
Glassfibre 10 µm	**10Q**
Glassfibre 20 µm	**20Q**
Other medias	
Cleanable metal mesh 35 µm	035W
Cleanable metal mesh 60 µm	060W

Table 4

SEAL TYPE	
Seal material	**CODE**
Fluoroelastomer	**V**

Table 5

INDICATORS	
Options	**CODE**
No indicator block	**N**
Indicator port plugged	P
Visual indicator	**M3**
Electrical indicator	**T1**
Electronic indicator (PNP/N.O.)	F1
Electronic indicator (NPN/N.O.)	F2

Table 6

BYPASS VALVE	
Bypass/indicator setting	**CODE**
1.7 bar/1.2 bar	G
3.5 bar/2.5 bar	**K**
No/No	X

Table 7

FILTER CONNECTIONS	
Port size	**CODE**
Square flange 60 mm	**X60**
Flange adapter SAE 2”-3000M	R32

Table 8

OPTIONS	
Options	**CODE**
With bypass	**1**
No bypass	2

REPLACEMENT ELEMENTS WITH FLUOROELASTOMER SEALS	
Media code	**Order code**
Glassfibre	**Microglass III**
02Q	939230Q
05Q	939231Q
10Q	**939232Q**
20Q	**939233Q**
Cleanable metal mesh	
035W	939234
060W	939235

SPARE PARTS	
Seal kit for valve spool	**CODE**
Seal material	
Fluoroelastomer	916045096

Seals needed in element service are included in Parker original replacement element package.

Please note the bolded options reflect standard options with reduced lead-time.

WARNING — USER RESPONSIBILITY
FAILURE OR IMPROPER SELECTION OR IMPROPER USE OF THE PRODUCTS DESCRIBED HEREIN OR RELATED ITEMS CAN CAUSE DEATH, PERSONAL INJURY AND PROPERTY DAMAGE.
- This document and other information from Parker-Hannifin Corporation, its subsidiaries and authorized distributors provide product or system options for further investigation by users having technical expertise.
- The user, through its own analysis and testing, is solely responsible for making the final selection of the system and components and assuring that all performance, endurance, maintenance, safety and warning requirements of the application are met. The user must analyze all aspects of the application, follow applicable industry standards, and follow the information concerning the product in the current product catalogue and in any other materials provided from Parker or its subsidiaries or authorized distributors.
- To the extent that Parker or its subsidiaries or authorized distributors provide component or system options based upon data or specifications provided by the user, the user is responsible for determining that such data and specifications are suitable and sufficient for all applications and reasonably foreseeable uses of the components or systems.

Tel: +45 63 12 83 00 | Email: ps@hymatik.com | www.hymatik.com | Hvidkaervej 27a, DK-5250 Odense SV, Denmark

DF65

Duplex Filters
Max. 800 l/min. 25 bar



Efficient Duplex filter for limited spaces.

The DF65 duplex filter has been designed especially for applications where space is limited. The unique design allows the installation of the filter in almost any position. For very tight height limitations, horizontal mounting position will save on critical available space. New purpose-designed iprotect® elements contain a broad filtration area providing low pressure loss, long service life and maximum protection even in cold conditions. The duplex arrangement allows continuous operation and element service to be made when most suitable for the maintenance staff.



Contact Information:

Parker Hannifin
Hydraulic Filter Division Europe

European Product Information Centre
Freephone: 00800 27 27 5374
(from AT, BE, CH, CZ, DE, EE, ES, FI, FR, IE, IT, PT, SE, SK, UK)
filtrationinfo@parker.com

www.parker.com/hfde

Applications:

- Gearbox lubrication systems
- Turbine lubrication systems
- Propulsion systems

Specification

Duplex filter:
Change-over valve with an open centre position. A locking device for both end positions and the middle position. Safety guards ensure that pressure is released prior to opening the filter.
Flow direction:
From out to in.
Connections:
Flanges SAE 2" 3000-M or SAE 2½" 3000-M. Inlet and outlet pressure connections 3/8" for an external differential pressure transmitter.
Maximum operating pressure:
25 bar
Seal material:
Fluoroelastomer
Operating temperature:
-20 ... +120°C
-20... + 160°C when using metal mesh elements
Housing material:
Cast iron (GSJ)

Weight:
135 kg
Nominal flow rate (30 cSt):
800 l/min (48 m3/h)
Bypass valve:
Standard bypass opening pressure 3.5 bar, optional opening pressure 1.7 bar or a blocked bypass.
Indicator options:
Integrated indicator port. Filter can be equipped with a visual, an electrical or an electronic differential pressure indicator. Standard indicator setting 2.5 bar used with 3.5 bar and blocked bypass; and setting 1.2 bar with 1.7 bar bypass.
Filter elements:
- iprotect® glassfibre elements, micron ratings(abs): 2 µm, 5 µm, 10 µm and 20 µm
- iprotect® cleanable metal mesh elements, micron ratings(abs): 35 µm and 60 µm

Fluid compatibility:
Suitable for use with regular hydraulic and lubrication oils and light fuel oils. For heavy fuel oils and other fluids consult Parker Filtration.

Parker's iprotect® family of filter elements represent the next generation of patented filter elements.

iprotect®

a. Thanks to the patented construction of every iprotect element, the quality of filtration is guaranteed, as no 'pirate spare parts' can be used. This ensures that the iprotect element remains the truly protective 'DNA' of hydraulic & lubrication systems.

b. In addition to the ultimate protection of the system, the iprotect family ensures that any environmental impact is minimised, by the retention and reuse of the filter element support core.

c. Finally, 'iprotect' the environment by reducing environmental waste, typically, by 50%.

Dimensions and other details may be changed without notice. Please contact Parker for the latest information.

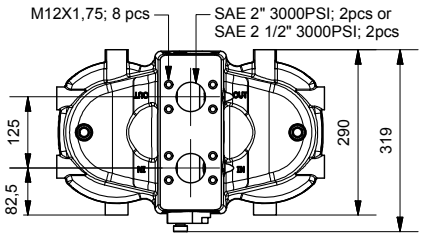

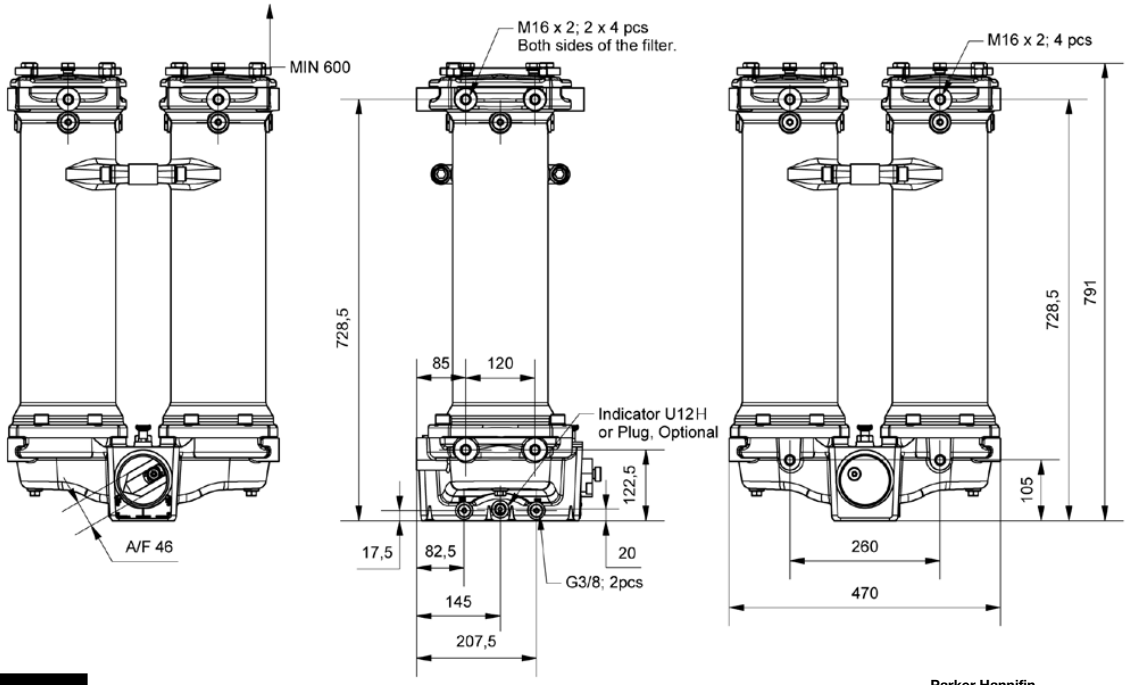

DF65

Pressure Drop Curves

$$\Delta p_{total} = \Delta p_{housing} + \Delta p_{element}$$

The recommended level of the initial pressure drop for this filter is maximum 0.8 bar.

Δ p-curves are measured at 30 cSt.

If the medium used has a viscosity different from 30 cSt, pressure drop over the filter can be estimated as follows:

$$\Delta p_{total} = \Delta p_{housing} + \Delta p_{element} \times \frac{\text{working viscosity}}{30\ \text{cSt}}$$

DF65 housing

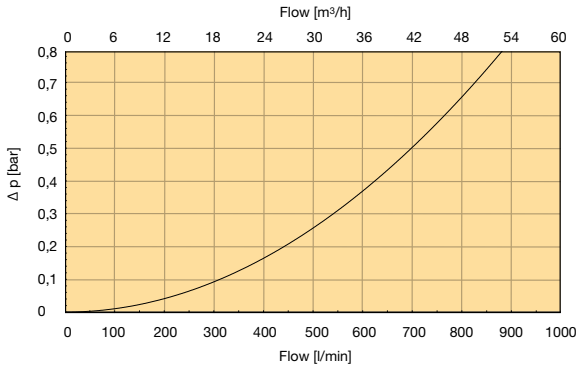

DF65 elements

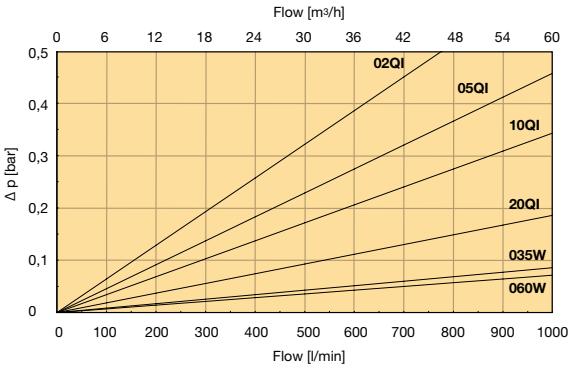

REPLACEMENT ELEMENTS WITH FLUOROELASTOMER SEALS	
Media code	**Order code**
Glassfibre	
02QI	938944Q
05QI	938945Q
10QI	**938946Q**
20QI	**938947Q**
Cleanable metal mesh	
035W	938948
060W	938949

SPARE PARTS	
Service seal kit	**CODE**
Seal material	
Fluoroelastomer	930000053

Seals needed in element service are included in Parker original replacement element package.



Product Description for DF65

Complete Filter:

Table 1	Table 2	Table 3	Table 4	Table 5	Table 6	Table 7	Table 8

Table 1

FILTER TYPE	
Model	**CODE**
Duplex filter	**DF65**

Table 2

FILTER SIZE	
Element length	**CODE**
Length 6	**6**

Table 3

DEGREE OF FILTRATION	
iprotect® Element type	**CODE**
Glassfibre 2 µm	02QI
Glassfibre 5 µm	05QI
Glassfibre 10 µm	**10QI**
Glassfibre 20 µm	**20QI**
Other medias	
Cleanable metal mesh 35 µm	035W
Cleanable metal mesh 60 µm	060W

Table 4

SEAL TYPE	
Elements	**CODE**
Fluoroelastomer	**V**

Please note the bolded codes reflect standard options with reduced lead-time.

Table 5

INDICATORS	
Options	**CODE**
No indicator block	N
Indicator port plugged	**P**
Visual indicator	**M3**
Electrical indicator	**T1**
Electronic indicator (PNP/N.O.)	F1
Electronic indicator (NPN/N.O.)	F2
Electronic indicator (NPN/N.O.)	F3
Electronic indicator (NPN/N.O.)	F4

Table 6

BYPASS AND INDICATOR SETTINGS	
Bypass/indicator setting	**CODE**
3.5 bar/2.5 bar	**K**
1.7 bar/1.2 bar	G
No/No	X

Code denotes settings only. Select with or no bypass in table 8.

Table 7

FILTER CONNECTIONS	
Port size	**CODE**
SAE flange 2” 3000-M	**D32**
SAE flange 2½” 3000-M	R40

Table 8

OPTIONS	
Options	**CODE**
With bypass	**1**
No bypass	2

WARNING – USER RESPONSIBILITY
FAILURE OR IMPROPER SELECTION OR IMPROPER USE OF THE PRODUCT DESCRIBED HEREIN OR RELATED ITEMS CAN CAUSE DEATH, PERSONAL INJURY AND PROPERTY DAMAGE.

- This document and other information from Parker Hannifin Corporation, its subsidiaries and authorized distributors provide product or system options for further investigation by users having technical expertise.
- The user, through its own analysis and testing, is solely responsible for making the final selection of the system and components and assuring that all performance, endurance, maintenance, safety and warning requirements of the application are met. The user must analyze all aspects of the application , follow applicable industry standards, and follow the information concerning the product in the current product catalogue and in any other materials provided from Parker or its subsidiaries or authorized distributors.
- To the extent that Parker or its subsidiaries or authorized distributors provide component or system options based upon data or specifications provided by the user, the user is responsible for determining that such data and specifications are suitable and sufficient for all applications and reasonably foreseeable of the components or systems.

Tel: +45 63 12 83 00 | Email: ps@hymatik.com | www.hymatik.com | Hvidkaervej 27a, DK-5250 Odense SV, Denmark

DF2110 Series

Duplex Filters
Max. 1200 l/min. 30 bar



Heavy duty performance

High dirt holding capacity yet low pressure drop. Heavy duty cast iron housing and several media options means a multitude of suitable applications. Maximum flow rate up to 1200 l/min and extended housing available for high viscocity oils and longer service intervals. DN80 PN 25 connection.



Contact Information:

Parker Hannifin
Hydraulic Filter Division Europe

European Product Information Centre
Freephone: 00800 27 27 5374
(from AT, BE, CH, CZ, DE, EE, ES, FI, FR, IE, IT, PT, SE, SK, UK)
filtrationinfo@parker.com

www.parker.com/hfde

Applications:

- Marine gear lubricating systems
- Propulsion systems
- Diesel engine lubricating systems
- Heavy fuel oil safety filter

Tel: +45 63 12 83 00 | Email: ps@hymatik.com | www.hymatik.com | Hvidkaervej 27a, DK-5250 Odense SV, Denmark

Specification

Duplex filter:
One reservoir can be closed for service, vertical installation.
Connections:
Standard flange size DN80/PN25. Delivered without counter flanges.
Maximum operating pressure:
30 bar
Seal material:
Fluoroelastomer
Operating temperature:
-20°C...+120°C with Fluoroelastomer seals,
-20°C...+160°C with metal mesh elements and Fluoroelastomer seals.
Housing material:
Cast iron (GJS)
Weight:
Length 1: 200 kg
Length 2: 240 kg

Nominal flow rate (30 cSt):
Length 1: 1000 l/min (60 m³/h)
Length 2: 1200 l/min (72 m³/h)
Bypass valve:
Standard bypass opening pressure 2.0 bar, optional opening pressure 3.0 bar or blocked bypass
Indicator options:
Visual, electrical or electronic indicator requires an indicator block. For details see indicator options table in product description page and catalogue section 4.
Filtration materials:
- Glassfibre Microglass III
- Cleanable metal mesh

Fluid compatibility:
Suitable for use with regular hydraulic and lubrication oils and fuel oils. For heavy fuel oil applications, please specify option P2 (see table 8 in product description) which ensures that filters are delivered with documentation according PED 97/23/EC category II. For other fluids consult Parker Filtration.

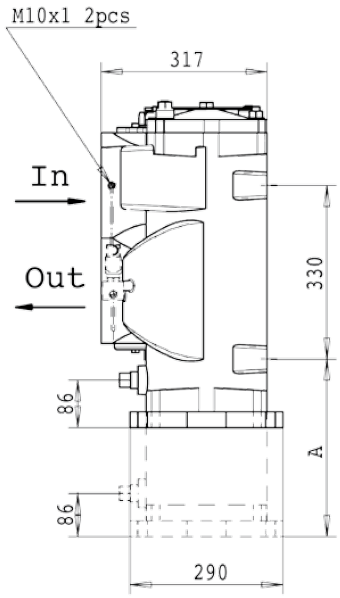

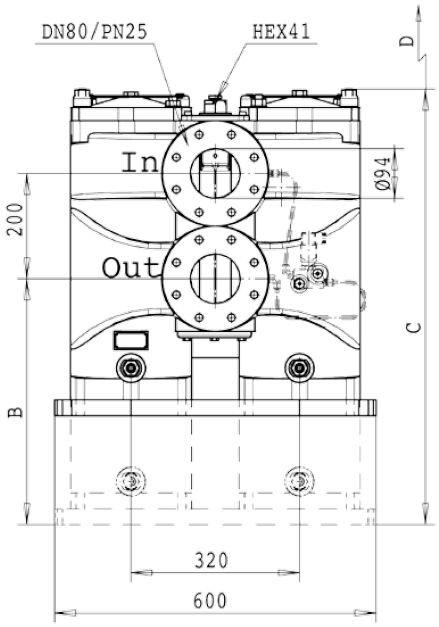

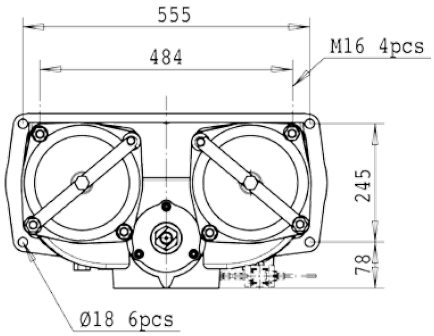

Type	A	B	C	D
Length 1	126	256	620	500
Length 2	386	516	880	700

Tel: +45 63 12 83 00 | Email: ps@hymatik.com | www.hymatik.com | Hvidkaervej 27a, DK-5250 Odense SV, Denmark

DF2110 Series

Pressure Drop Curves

$$\Delta p_{total} = \Delta p_{housing} + \Delta p_{element}$$

The recommended level of the initial pressure drop for this filter is maximum 0.5 bar.

Δ p-curves are measured at 30 cSt.

If the medium used has a viscosity different from 30 cSt, pressure drop over the element can be estimated as follows:

$$\Delta p_{total} = \Delta p_{housing} + \Delta p_{element} \times \frac{\text{working viscosity}}{30\ \text{cSt}}$$

DF2110 housing

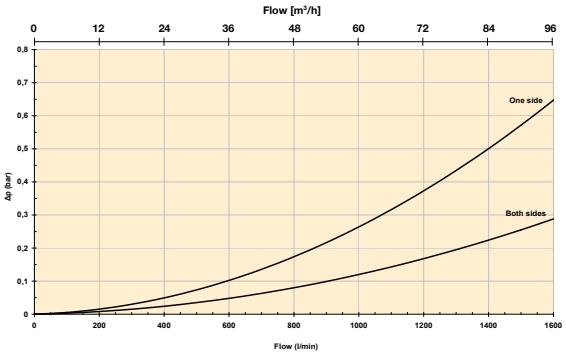

Length 1 elements/one side

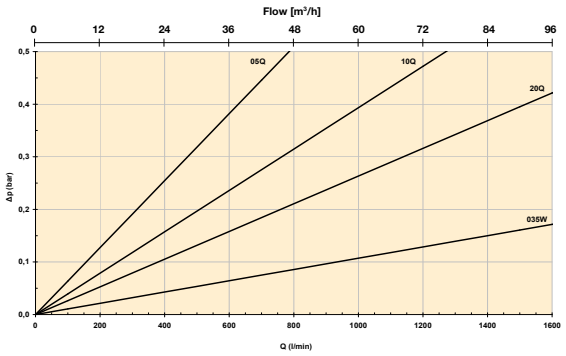

Length 1 elements/both sides

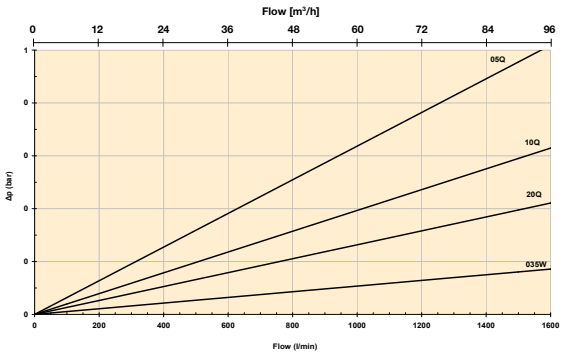

Length 2 elements/one side

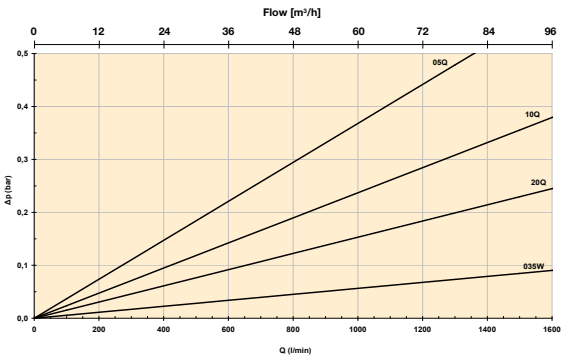

Length 2 elements/both sides

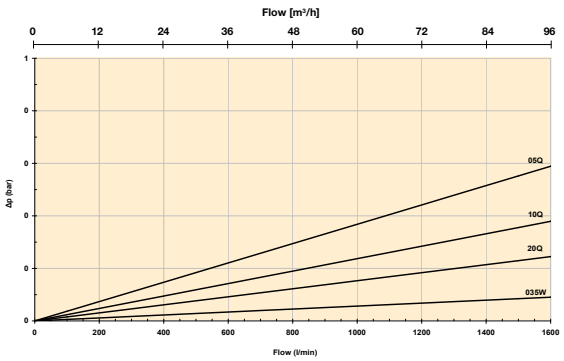

Tel: +45 63 12 83 00 | Email: ps@hymatik.com | www.hymatik.com | Hvidkaervej 27a, DK-5250 Odense SV, Denmark

Product Description for DF2110

Complete Filter:

Table 1	Table 2	Table 3	Table 4	Table 5	Table 6	Table 7	Table 8

Table 1

FILTER TYPE	
Model	**CODE**
Duplex filter	**DF2110**

Table 2

FILTER SIZE	
Element length	**CODE**
Length 1	**1**
Length 2	2

Table 3

DEGREE OF FILTRATION	
Element type	**CODE**
Microglass III	
Glassfibre 5 µm	05Q
Glassfibre 10 µm	**10Q**
Glassfibre 20 µm	**20Q**
Other medias	
Cleanable metal mesh 35 µm	035W
Cleanable metal mesh 60 µm	060W

Table 4

SEAL TYPE	
Seal material	**CODE**
Fluoroelastomer	**V**

Table 5

INDICATORS	
Options	**CODE**
No indicator block	**N**
Indicator port plugged	P
Visual indicator	**M3**
Electrical indicator	**T1**
Electronic indicator (PNP/N.O.)	F1
Electronic indicator (NPN/N.O.)	F2

Table 6

BYPASS VALVE	
Bypass/indicator setting	**CODE**
2.0 bar/1.5 bar	**H**
3.0 bar/2.5 bar	J
No/No	X

Table 7

FILTER CONNECTIONS	
Port size	**CODE**
Flange DN80	**D80**

Table 8

OPTIONS	
Options	**CODE**
With bypass	1
No bypass	**2**
PED category 2	P2

If several options are selected, please add the codes in order listed above.

REPLACEMENT ELEMENTS WITH FLUOROELASTOMER SEALS		
Media code	**Order code for Length1**	**Order code for Length2**
Glassfibre	**Microglass III**	**Microglass III**
05Q	938365Q	938367Q
10Q	**938373Q**	938093Q
20Q	**938366Q**	938368Q
Cleanable metal mesh		
035W	939186	939188
060W	939187	939189

SPARE PARTS	
Seal kit	**CODE**
Seal material	
Fluoroelastomer	916045078

Please note the bolded options reflect standard options with reduced lead-time.

Tel: +45 63 12 83 00 | Email: ps@hymatik.com | www.hymatik.com | Hvidkaervej 27a, DK-5250 Odense SV, Denmark

DF2050 Series

Duplex Filters
Max. 1000 l/min. 30 bar



Heavy duty performance

High dirt holding capacity yet low pressure drop. Heavy duty cast iron housing and same elements as in DF2035 means safety and continuity in your applications. Maximum flow rate up to 1000 l/min. DN80 PN 25 connection.



Contact Information:

Parker Hannifin
Hydraulic Filter Division Europe

European Product Information Centre
Freephone: 00800 27 27 5374
(from AT, BE, CH, CZ, DE, EE, ES, FI, FR, IE, IT, PT, SE, SK, UK)
filtrationinfo@parker.com

www.parker.com/hfde

Applications:

- Marine gear lubricating systems
- Propulsion systems
- Diesel engine lubricating systems
- Heavy fuel oil safety filter

Tel: +45 63 12 83 00 | Email: ps@hymatik.com | www.hymatik.com | Hvidkaervej 27a, DK-5250 Odense SV, Denmark

Specification

Duplex filter:
One reservoir can be closed for service, vertical installation. Length 2 includes 2 elements/side and length 3 includes 3 elements/side.
Connections:
Standard flange size DN80/PN25. Delivered without counter flanges.
Maximum operating pressure:
30 bar
Seal material:
Fluoroelastomer
Operating temperature:
-20°C...+100°C with elements with Nitrile seals,
-20°C...+160°C with metal mesh elements and Fluoroelastomer seals.
Housing material:
Cast iron (GJS)
Weight:
Length 2: 200 kg
Length 3: 240 kg
Nominal flow rate (30 cSt):
Length 2: 900 l/min (54 m^3/h)
Length 3: 1000 l/min (60 m^3/h)

Bypass valve:
Standard with blocked bypass. Optional opening pressure 1.7 bar
Indicator options:
Visual, electrical or electronic indicator requires an indicator block. For details see indicator options table in product description page and catalogue section 4.
Filtration materials:
- Resin impregnated heavy duty cellulose paper 15µm nominal
- Glassfibre Microglass III
- Cleanable metal mesh

Secondary filter:
- Filtration material cleanable wire mesh
- Filtration degree 60 µm

Fluid compatibility:
Suitable for use with regular hydraulic and lubrication oils and fuel oils. For heavy fuel oil applications, please specify option P2 (see table 8 in product description) which ensures that filters are delivered with documentation according PED 97/23/EC category II. For other fluids consult Parker Filtration.

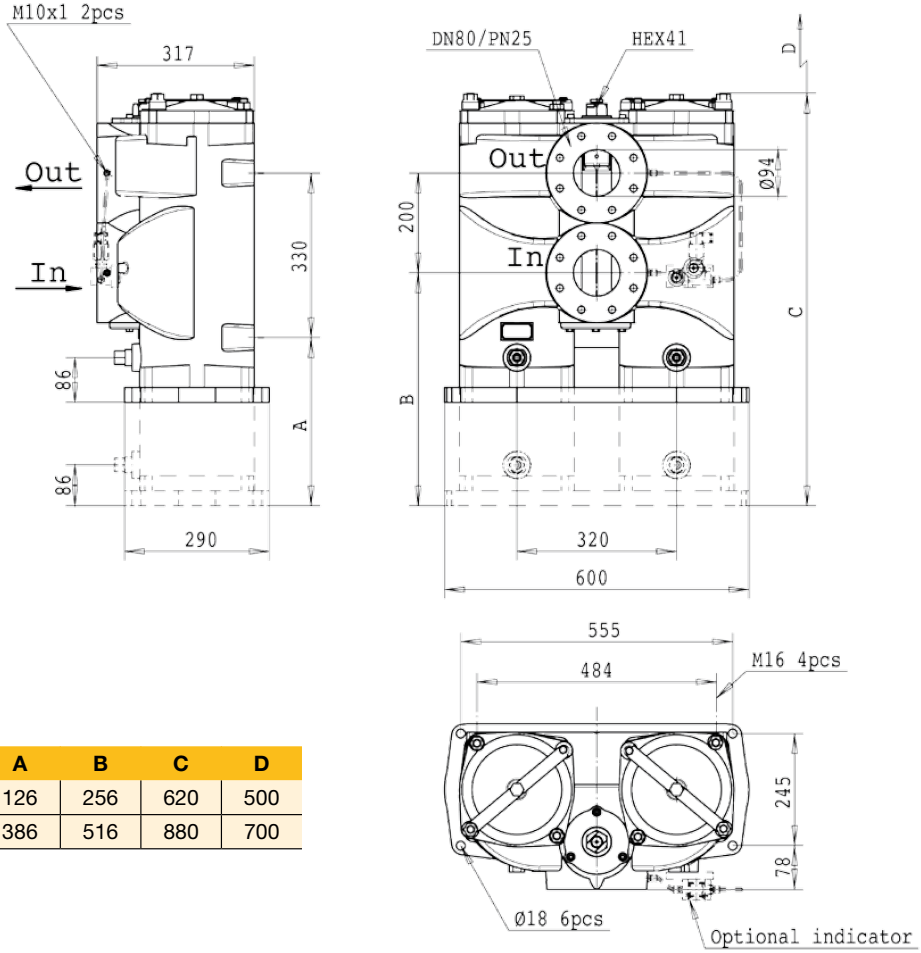

Type	A	B	C	D
Length 2	126	256	620	500
Length 3	386	516	880	700

Tel: +45 63 12 83 00 | Email: ps@hymatik.com | www.hymatik.com | Hvidkaervej 27a, DK-5250 Odense SV, Denmark

DF2050 Series

Pressure Drop Curves

$$\Delta p_{total} = \Delta p_{housing} + \Delta p_{element}$$

The recommended level of the initial pressure drop for this filter is maximum 0.5 bar.

Δ p-curves are measured at 30 cSt.

If the medium used has a viscosity different from 30 cSt, pressure drop over the element can be estimated as follows:

$$\Delta p_{total} = \Delta p_{housing} + \Delta p_{element} \times \frac{\text{working viscosity}}{30\ \text{cSt}}$$

DF2050 housing

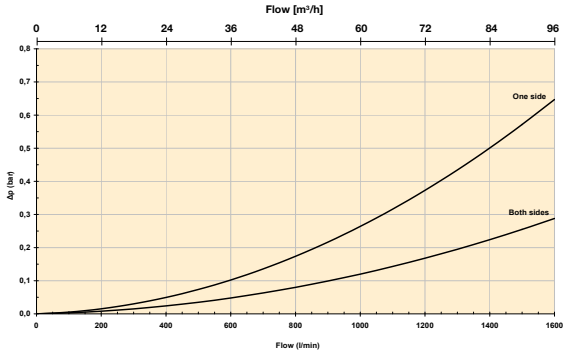

Length 2 element pack/one side

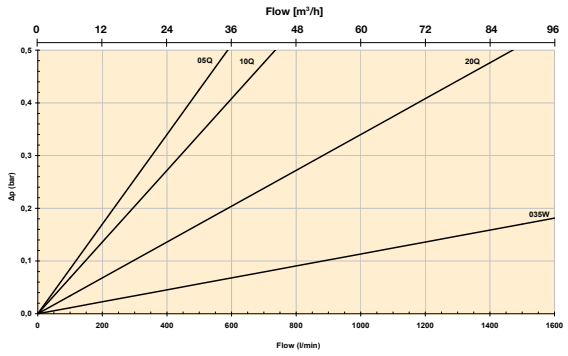

Length 2 element pack/both side

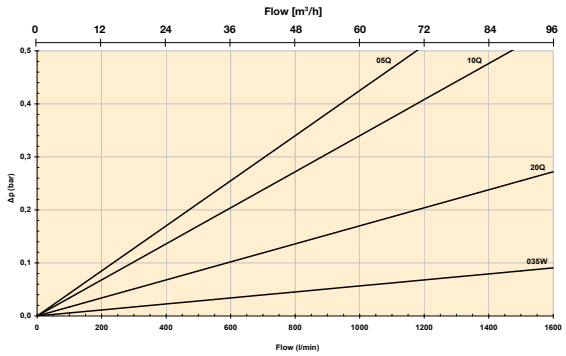

Length 3 element pack/one side

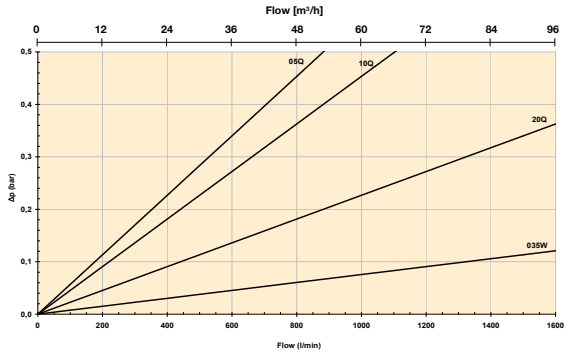

Length 3 element pack/both sides

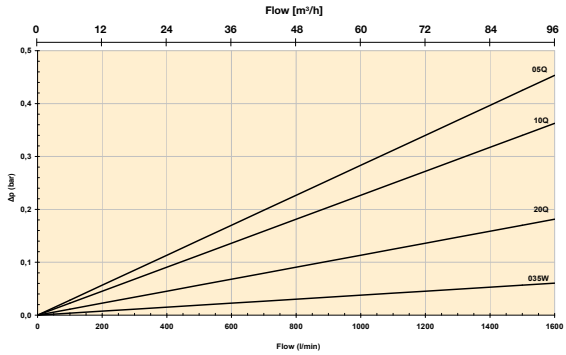

Tel: +45 63 12 83 00 | Email: ps@hymatik.com | www.hymatik.com | Hvidkaervej 27a, DK-5250 Odense SV, Denmark

Product Description for DF2050

Complete Filter:

Table 1	Table 2	Table 3	Table 4	Table 5	Table 6	Table 7	Table 8

Table 1

FILTER TYPE	
Model	**CODE**
Duplex filter	**DF2050**

Table 2

FILTER SIZE	
Length/elements	**CODE**
2 elements/side	**2**
3 elements/side	3

Table 3

DEGREE OF FILTRATION	
Element type	**CODE**
Microglass III	
Glassfibre 5 µm	05Q
Glassfibre 10 µm	**10Q**
Glassfibre 20 µm	**20Q**
Other medias	
Cellulose 15 µm (nom)	015N
Cleanable metal mesh 35 µm	035W
Cleanable metal mesh 60 µm	060W

Table 4

SEAL TYPE	
Seal material	**CODE**
Fluoroelastomer	**V**

Table 5

INDICATORS	
Options	**CODE**
No indicator block	**N**
Indicator port plugged	P
Visual indicator	**M3**
Electrical indicator	**T1**
Electronic indicator (PNP/N.O.)	F1
Electronic indicator (NPN/N.O.)	F2

Table 6

BYPASS VALVE	
Bypass/indicator setting	**CODE**
1.7 bar/1.2 bar (select in table 8)	G
No/1.5 bar (select 2 in table 8)	**H**
No/No (select 2 in table 8)	**X**

Table 7

FILTER CONNECTIONS	
Port size	**CODE**
Flange DN80	**D80**

Table 8

OPTIONS	
Options	**CODE**
With bypass	1
No bypass	**2**
PED category 2	P2

If several options are selected, please add the codes in order listed above.

REPLACEMENT ELEMENTS	
Media code / Seal type	**Order code**
Glassfibre	**Microglass III**
05Q / Nitrile	939401Q
10Q / Nitrile	**939402Q**
20Q / Nitrile	**939403Q**
Cellulose 15 µm (nom)	
015N / Nitrile	939404
Cleanable metal mesh	
035W / Fluoroelastomer	939405
060W / Fluoroelastomer	939406

SPARE PARTS	
Secondary filter element (60 µm)	**CODE**
Length 2	939416
Length 3	939417
Seal kit	**CODE**
Seal material	
Fluoroelastomer	916045076

Please note the bolded options reflect standard options with reduced lead-time.

Tel: +45 63 12 83 00 | Email: ps@hymatik.com | www.hymatik.com | Hvidkaervej 27a, DK-5250 Odense SV, Denmark

DF2035 Series

Duplex Filters
Max. 600 l/min. 8 bar



Light weight, high capacity

Several media options and high dirt holding capacity – up to three filter elements per reservoir. Aluminium housing offers light weight combined to considerably high capacity. Two different housing options.



Contact Information:

Parker Hannifin
Hydraulic Filter Division Europe

European Product Information Centre
Freephone: 00800 27 27 5374
(from AT, BE, CH, CZ, DE, EE, ES, FI, FR, IE, IT, PT, SE, SK, UK)
filtrationinfo@parker.com

www.parker.com/hfde

Applications:

- Industrial gear systems
- Diesel engine lubricating systems

Specification

Duplex filter:
One reservoir can be closed for service, vertical installation. Length 2 includes 2 elements/side and length 3 includes 3 elements/side.
Connections:
Square flanges with DN65/PN16 dimensioning. Standard delivery includes blind counter flanges according DIN 2527.
Maximum operating pressure:
8 bar
Seal material:
Fluoroelastomer
Operating temperature:
-20°C...+100°C. For other temperatures consult Parker Filtration.
Housing material:
Aluminium
Weight:
Length 2: 49.0 kg
Length 3: 62.5 kg

Maximum flow rate:
600 l/min (36 m³/h)
Indicator options:
Visual, electrical or electronic indicator requires an indicator block. For details see indicator options table in product description page and catalogue section 4.
Primary filter:
- Length 2: two filter elements per reservoir
- Length 3: three filter elements per reservoir
- Filtration materials
  - Resin impregnated heavy duty cellulose paper 15µm nominal
  - Glassfibre Microglass III
  - Cleanable metal mesh

Secondary filter:
- Filtration material cleanable metal mesh
- Filtration degree 60µm

Fluid compatibility:
Suitable for use with regular hydraulic and lubrication oils. For other fluids consult Parker Filtration.

Type	A
Length 2	590
Length 3	775

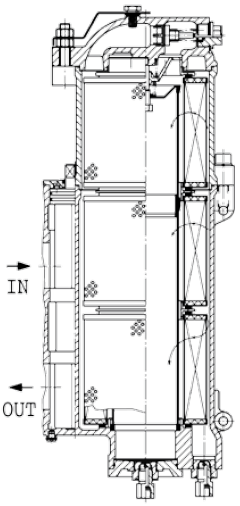

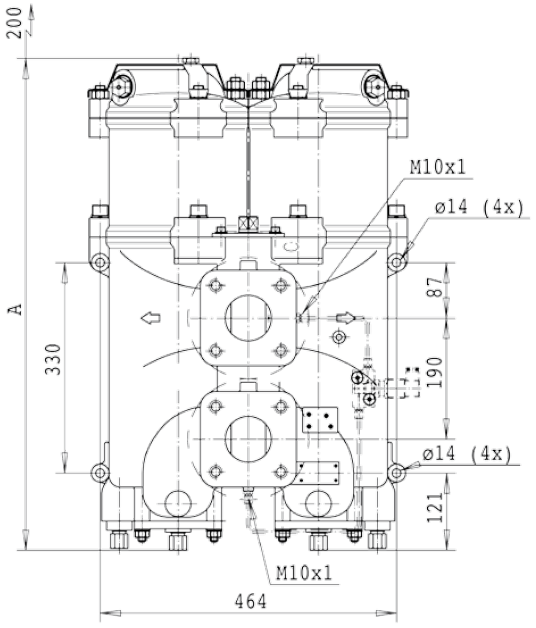

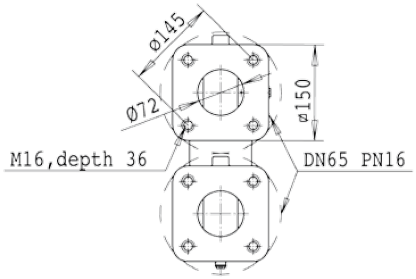

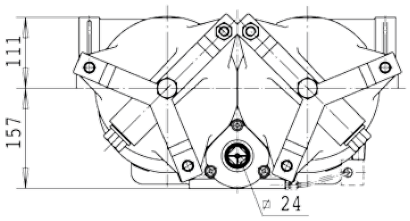

DF2035 Series

Pressure Drop Curves

$$\Delta p_{total} = \Delta p_{housing} + \Delta p_{element}$$

The recommended level of the initial pressure drop for this filter is maximum 0.5 bar.

Δ p-curves are measured at 30 cSt.

If the medium used has a viscosity different from 30 cSt, pressure drop over the element can be estimated as follows:

$$\Delta p_{total} = \Delta p_{housing} + \Delta p_{element} \times \frac{\text{working viscosity}}{30\ \text{cSt}}$$

DF2035 housing

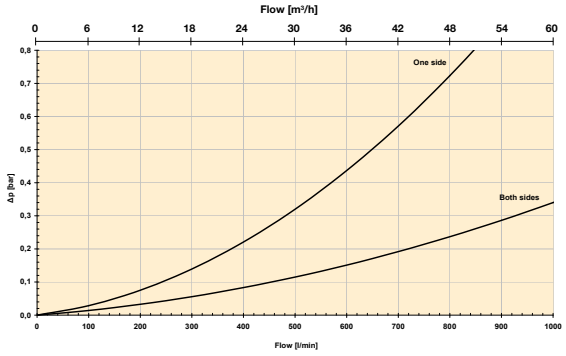

Length 2 element pack (2 pcs)/one side in use

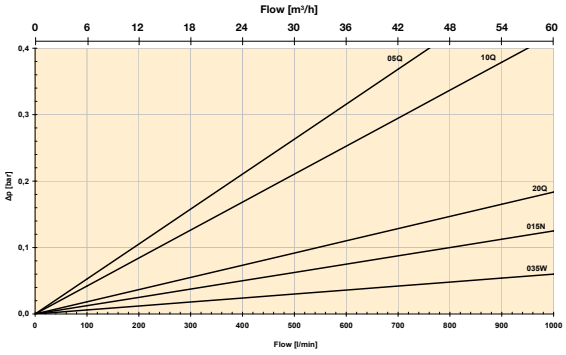

Length 2 element pack (2 + 2 pcs)/both sides in use

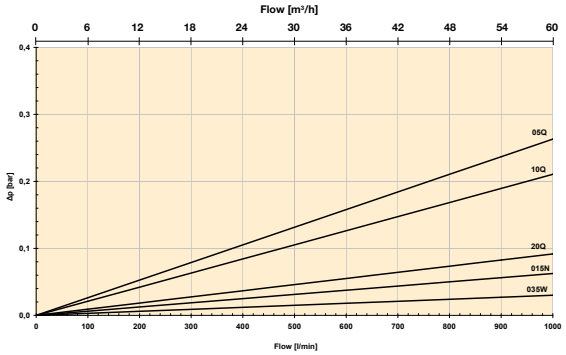

Length 3 element pack (3 pcs)/one side in use

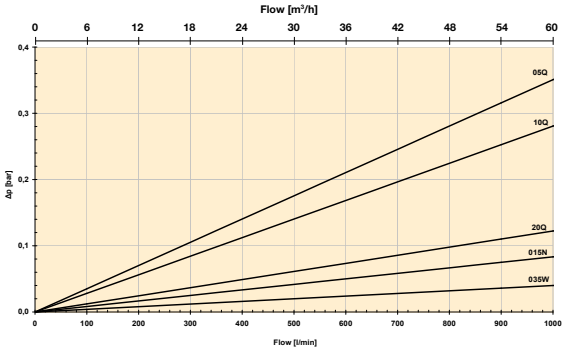

Length 3 element pack (3 + 3 pcs)/both sides in use

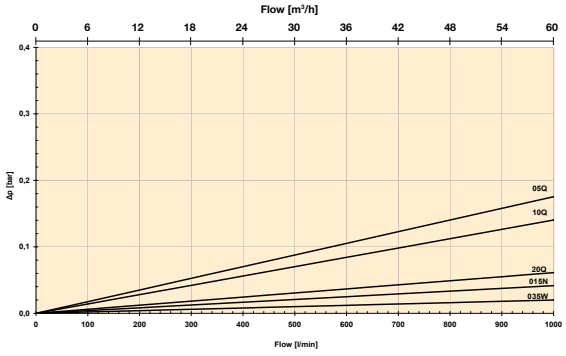

Tel: +45 63 12 83 00 | Email: ps@hymatik.com | www.hymatik.com | Hvidkaervej 27a, DK-5250 Odense SV, Denmark

Product Description for DF2035

Complete Filter:

Table 1	Table 2	Table 3	Table 4	Table 5	Table 6	Table 7	Table 8

Table 1

FILTER TYPE	
Model	**CODE**
Duplex filter	**DF2035**

Table 2

FILTER SIZE	
Length/elements	**CODE**
2 elements/side	**2**
3 elements/side	**3**

Table 3

DEGREE OF FILTRATION	
Element type	**CODE**
Microglass III	
Glassfibre 5 µm	05Q
Glassfibre 10 µm	**10Q**
Glassfibre 20 µm	**20Q**
Other medias	
Cellulose 15 µm (nom)	**015N**
Cleanable metal mesh 35 µm	035W
Cleanable metal mesh 60 µm	060W

Table 4

SEAL TYPE	
Seal material	**CODE**
Fluoroelastomer	**V**

Table 5

INDICATORS	
Options	**CODE**
No indicator block	**N**
Indicator port plugged	P
Visual indicator	**M3**
Electrical indicator	**T1**
Electronic indicator (PNP/N.O.)	F1
Electronic indicator (NPN/N.O.)	F2

Table 6

BYPASS VALVE	
Bypass/indicator setting	**CODE**
2.0 bar/1.5 bar	**H**

Table 7

FILTER CONNECTIONS	
Port size	**CODE**
Square flange ref. DN65	**D65**

Table 8

OPTIONS	
Options	**CODE**
With bypass	**1**

REPLACEMENT ELEMENTS	
Media code / Seal type	**Order code**
Glassfibre	**Microglass III**
05Q / Nitrile	939401Q
10Q / Nitrile	**939402Q**
20Q / Nitrile	**939403Q**
Cellulose 15 µm (nom)	
015N / Nitrile	939404
Cleanable metal mesh	
035W / Fluoroelastomer	939405
060W / Fluoroelastomer	939406

SPARE PARTS	
Secondary filter element (60 µm)	**CODE**
Length 2	939414
Length 3 extension element*	939415
Seal kit	**CODE**
Seal material	
Fluoroelastomer	916045027

* Fully length 3 requires both 939414 + 939415.

Please note the bolded options reflect standard options with reduced lead-time.

Tel: +45 63 12 83 00 | Email: ps@hymatik.com | www.hymatik.com | Hvidkaervej 27a, DK-5250 Odense SV, Denmark

DFH2060 Series

Duplex Filters
Max. 2200 l/min. 10 bar



Maximum performance – minimum height

Slim welded housing construction with cast iron change over valve section. Horizontal mounting makes assembly easier in cranked positions. High dirt holding capacity and low pressure drop. Several media options. One reservoir can be closed for service.

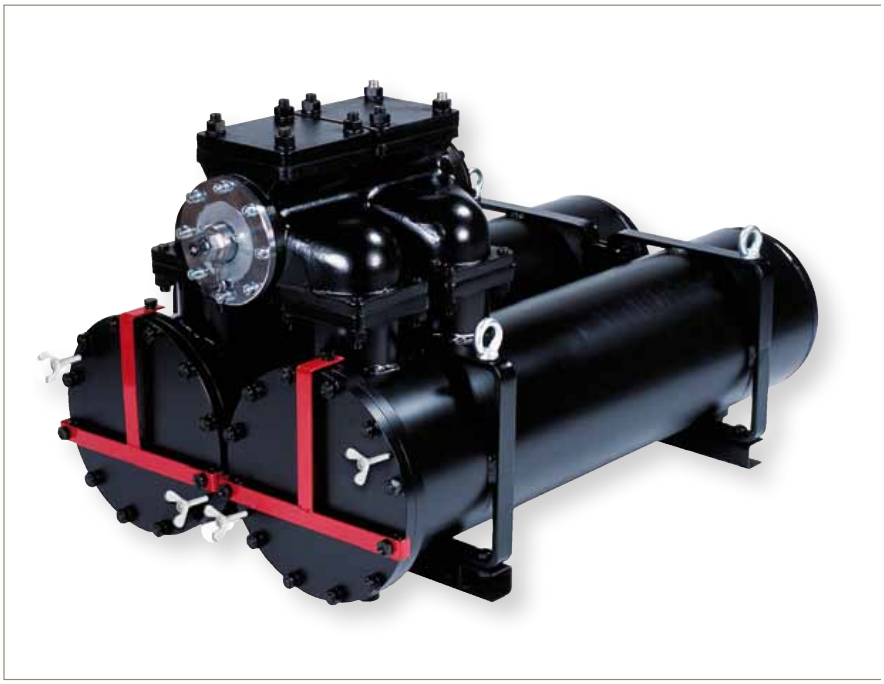

Contact Information:

Parker Hannifin
Hydraulic Filter Division Europe

European Product Information Centre
Freephone: 00800 27 27 5374
(from AT, BE, CH, CZ, DE, EE, ES, FI, FR, IE, IT, PT, SE, SK, UK)
filtrationinfo@parker.com

www.parker.com/hfde

Applications:

- Heavy duty diesel engine lubricating systems
- High flow industrial lubricating systems

Tel: +45 63 12 83 00 | Email: ps@hymatik.com | www.hymatik.com | Hvidkaervej 27a, DK-5250 Odense SV, Denmark

Specification

Duplex filter:
One reservoir can be closed for service, horizontal installation. 1300 mm (1.3 m) free space must be reserved in front of the filter for filter element removal. Filter includes 3 elements/side.
Connections:
Square flanges with port size Ø160 mm. Standard delivery includes blind counter flanges.
Maximum operating pressure:
10 bar
Seal material:
Fluoroelastomer
Operating temperature:
-20°C...+100°C with elements with Nitrile seals,
-20°C...+160°C with metal mesh elements and Fluoroelastomer seals.
Housing material:
Steel/cast iron (GJS)
Weight:
390 kg

Nominal flow rate (30 cSt):
2200 l/min (132 m³/h)
Bypass valve:
For the primary filter only, opening pressure 2.0 bar
Indicator options:
Visual, electrical or electronic indicator requires an indicator block. For details see indicator options table in product description page and catalogue section 4.
Primary filter:
- Three filter elements per reservoir
- Filtration materials
  - Resin impregnated heavy duty cellulose paper 15µm nominal
  - Glassfibre Microglass III
  - Cleanable metal mesh

Secondary filter:
- One filter element per reservoir
- Filtration material cleanable wire mesh
- Filtration degree 60µm

Fluid compatibility:
Suitable for use with regular hydraulic and lubrication oils. For other fluids consult Parker Filtration.

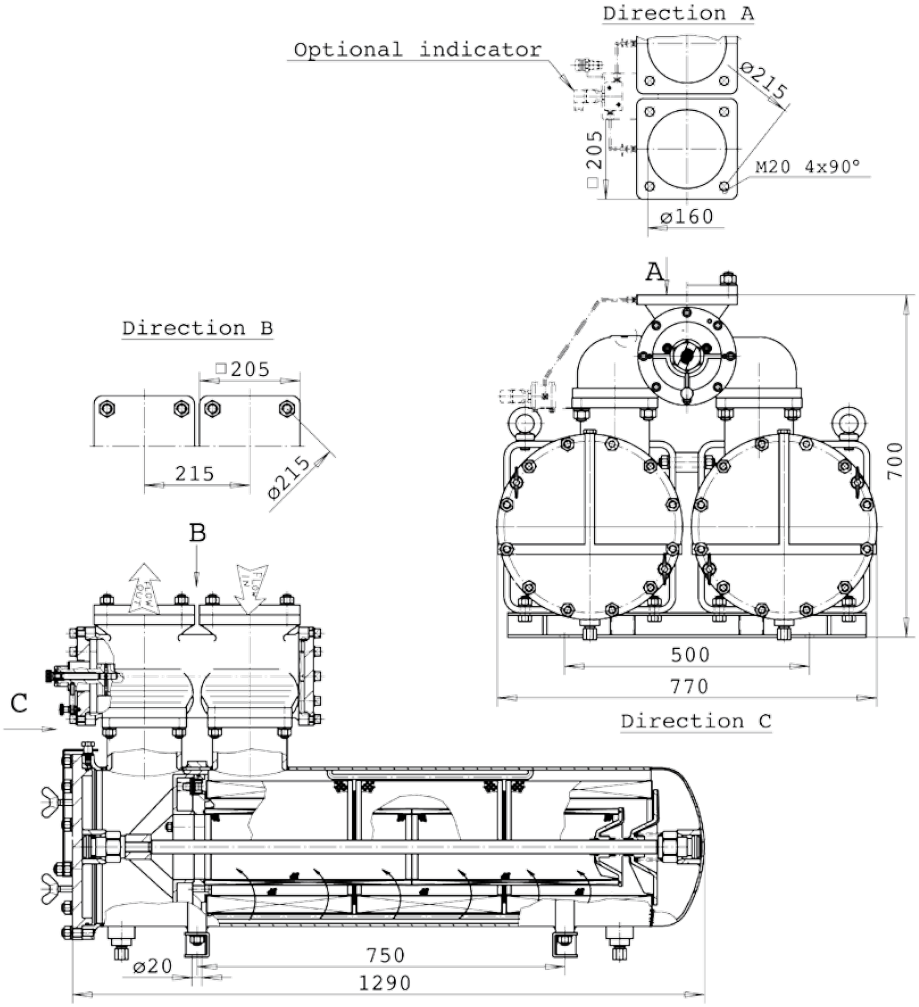

Tel: +45 63 12 83 00 | Email: ps@hymatik.com | www.hymatik.com | Hvidkaervej 27a, DK-5250 Odense SV, Denmark

DFH2060 Series

Pressure Drop Curves

$$\Delta p_{total} = \Delta p_{housing} + \Delta p_{element}$$

The recommended level of the initial pressure drop for this filter is maximum 0.5 bar.

Δ p-curves are measured at 30 cSt.

If the medium used has a viscosity different from 30 cSt, pressure drop over the element can be estimated as follows:

$$\Delta p_{total} = \Delta p_{housing} + \Delta p_{element} \times \frac{\text{working viscosity}}{30\ \text{cSt}}$$

DFH2060 housing

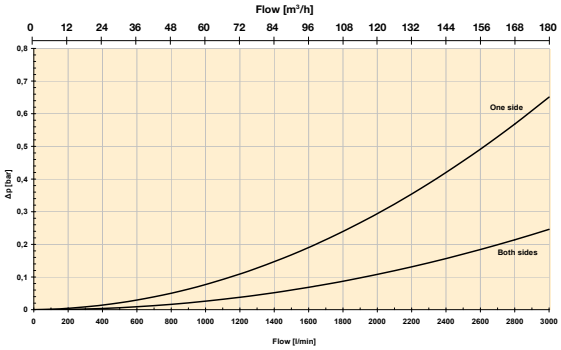

DFH2060 element pack (3 pcs)/one side in use

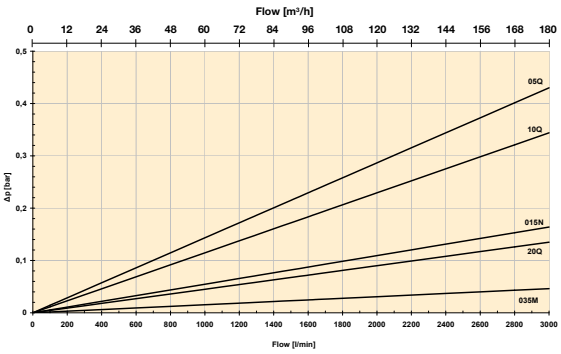

DFH2060 element pack (3 + 3 pcs)/both sides in use

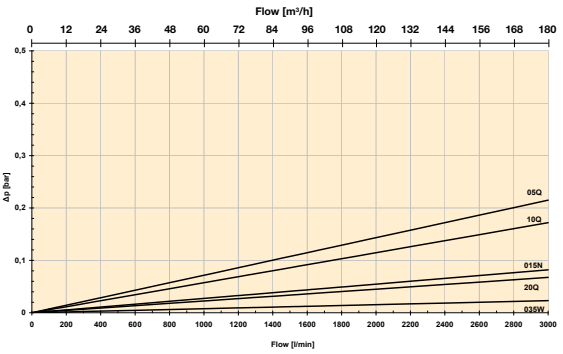

Tel: +45 63 12 83 00 | Email: ps@hymatik.com | www.hymatik.com | Hvidkaervej 27a, DK-5250 Odense SV, Denmark

Product Description for DFH2060

Complete Filter:

Table 1	Table 2	Table 3	Table 4	Table 5	Table 6	Table 7	Table 8

Table 1

FILTER TYPE	
Model	**CODE**
Duplex filter, horizontal installation	**DFH2060**

Table 2

FILTER SIZE	
Length/elements	**CODE**
3 elements/side	**3**

Table 3

DEGREE OF FILTRATION	
Element type	**CODE**
Microglass III	
Glassfibre 5 µm	05Q
Glassfibre 10 µm	**10Q**
Glassfibre 20 µm	**20Q**
Other medias	
Cellulose 15 µm (nom)	**015N**
Cleanable metal mesh 35 µm	035W
Cleanable metal mesh 60 µm	060W

Table 4

SEAL TYPE	
Seal material	**CODE**
Fluoroelastomer	**V**

Table 5

INDICATORS	
Options	**CODE**
No indicator block	**N**
Indicator port plugged	P
Visual indicator	**M3**
Electrical indicator	**T1**
Electronic indicator (PNP/N.O.)	F1
Electronic indicator (NPN/N.O.)	F2

Table 6

BYPASS VALVE	
Bypass/indicator setting	**CODE**
2.0 bar/1.5 bar	**H**

Table 7

FILTER CONNECTIONS	
Port size	**CODE**
Square flange 160 mm	**X160**

Table 8

OPTIONS	
Options	**CODE**
With bypass	**1**

REPLACEMENT ELEMENTS	
Media code / Seal type	**Order code**
Glassfibre	**Microglass III**
05Q / Nitrile	939381Q
10Q / Nitrile	**939382Q**
20Q / Nitrile	**939383Q**
Cellulose 15 µm (nom)	
015N / Nitrile	939384
Cleanable metal mesh	
035W / Fluoroelastomer	939385
060W / Fluoroelastomer	939386

SPARE PARTS	
Secondary filter element	**CODE**
Wire mesh 60 µm	939394
Seal kits	**CODE**
For valve assembly	916045064
For vessel (two kits required for complete filter)	916045066

Please note the bolded options reflect standard options with reduced lead-time.

Tel: +45 63 12 83 00 | Email: ps@hymatik.com | www.hymatik.com | Hvidkaervej 27a, DK-5250 Odense SV, Denmark

DF2070 Series

Duplex Filters
Max. 1800 l/min. 10 bar



Big and tall for high flow

Welded housing construction with cast iron change over valve section. Compact, low-depth duplex construction for vertical mounting. High flow and good dirt holding capacity combined to low pressure drop. Several media options for heavy fuel oil and lube systems.



Contact Information:

Parker Hannifin
Hydraulic Filter Division Europe

European Product Information Centre
Freephone: 00800 27 27 5374
(from AT, BE, CH, CZ, DE, EE, ES, FI, FR, IE, IT, PT, SE, SK, UK)
filtrationinfo@parker.com

www.parker.com/hfde

Applications:

- Diesel engine lubricating systems
- High flow industrial lubricating systems
- High flow heavy fuel oil systems as safety filter

Specification

Duplex filter:
One reservoir can be closed for service, vertical installation. Length 2 includes 2 elements/side and length 3 includes 3 elements/side.
Connections:
Square flanges with port size Ø160 mm. Standard delivery includes blind counter flanges.
Maximum operating pressure:
10 bar
Seal material:
Fluoroelastomer
Operating temperature:
-20°C...+100°C. For other temperatures consult Parker Filtration.
Housing material:
Steel/cast iron (GJS)
Weight:
Length 2: 310 kg
Length 3: 400 kg
Nominal flow rate (30 cSt):
Length 2: 1500 l/min (90 m³/h)
Length 3: 1800 l/min (132 m³/h)

Bypass valve:
For the primary filter only, opening pressure 2.0 bar
Indicator options:
Visual, electrical or electronic indicator requires an indicator block. For details see indicator options table in product description page and catalogue section 4.
Primary filter:
- Length 2: two filter elements per reservoir
- Length 3: three filter elements per reservoir
- Filtration materials
  - Resin impregnated heavy duty cellulose paper 15µm nominal
  - Glassfibre Microglass III
  - Cleanable metal mesh

Secondary filter:
- One filter element per reservoir
- Filtration material cleanable wire mesh
- Filtration degree 60 µm

Fluid compatibility:
Suitable for use with regular hydraulic and lubrication oils and fuel oils. For heavy fuel oil applications, please specify option P2 (see table 8 in product description) which ensures that filters are delivered with documentation according PED 97/23/EC category II. For other fluids consult Parker Filtration.

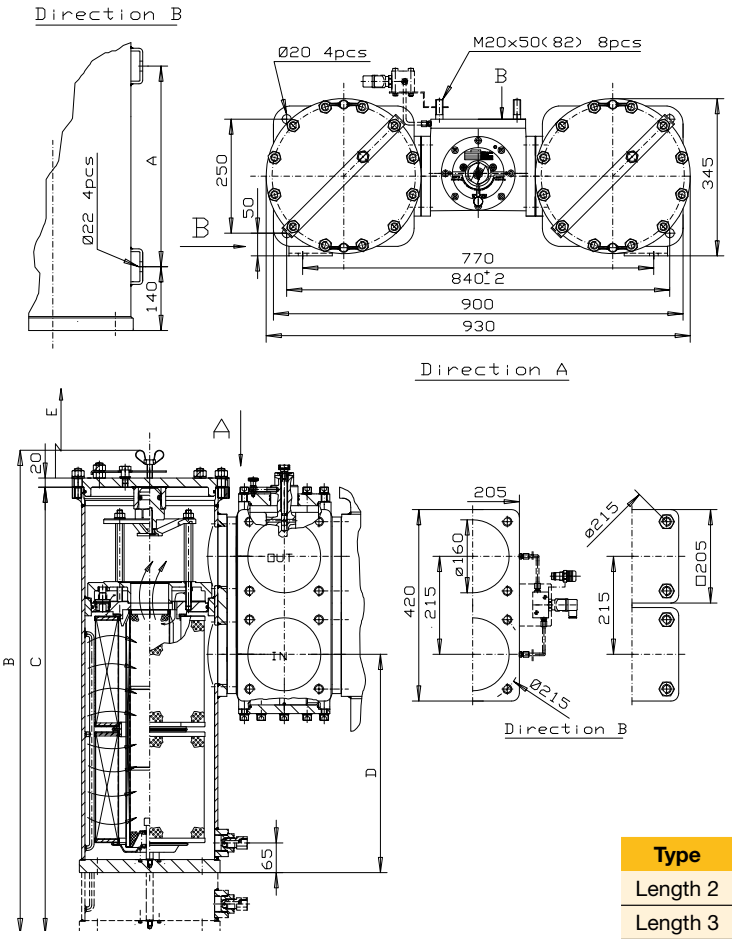

Type	A	B	C	D	E
Length 2	440	960	845	478	500
Length 3	706	1227	1112	745	560

Parker Hannifin
Hydraulic Filter Division Europe
FDHB500UK/DF2070

DF2070 Series

Pressure Drop Curves

$$\Delta p_{total} = \Delta p_{housing} + \Delta p_{element}$$

The recommended level of the initial pressure drop for this filter is maximum 0.5 bar.

Δ p-curves are measured at 30 cSt.

If the medium used has a viscosity different from 30 cSt, pressure drop over the element can be estimated as follows:

$$\Delta p_{total} = \Delta p_{housing} + \Delta p_{element} \times \frac{\text{working viscosity}}{30\ \text{cSt}}$$

DF2070 housing

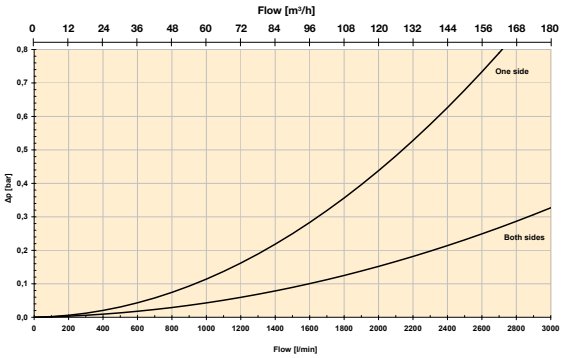

Length 2 element pack (2 pcs)/one side in use

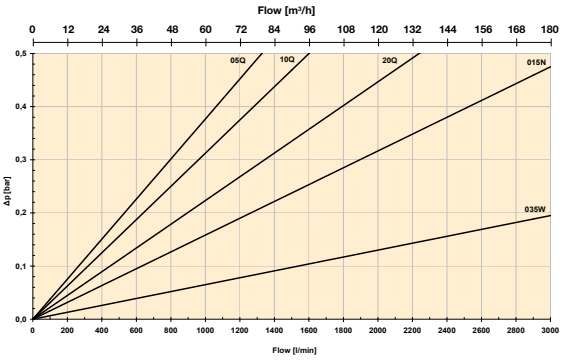

Length 2 element pack (2 + 2 pcs)/both sides in use

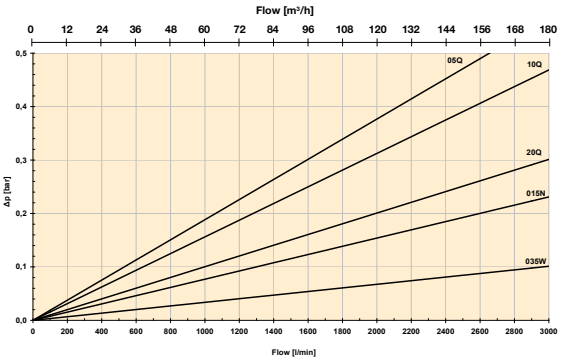

Length 3 element pack (3 pcs)/one side in use

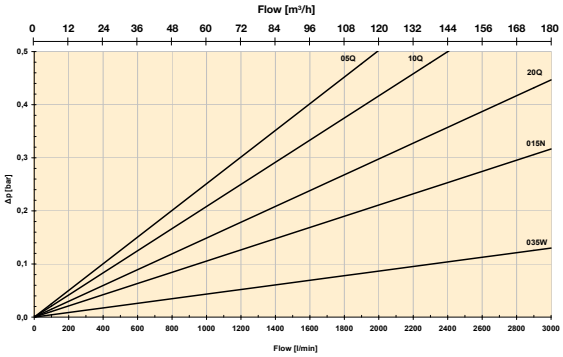

Length 3 element pack (3 + 3 pcs)/both sides in use

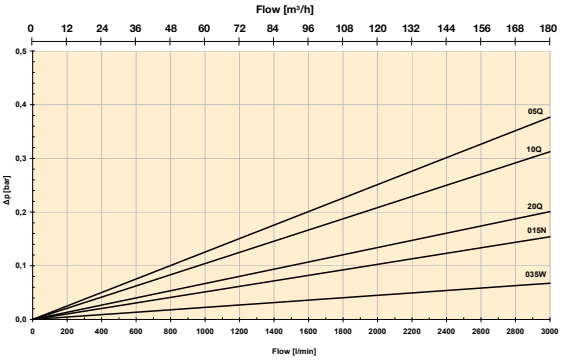

Tel: +45 63 12 83 00 | Email: ps@hymatik.com | www.hymatik.com | Hvidkaervej 27a, DK-5250 Odense SV, Denmark

Product Description for DF2070

Complete Filter:

Table 1	Table 2	Table 3	Table 4	Table 5	Table 6	Table 7	Table 8

Table 1

FILTER TYPE	
Model	**CODE**
Duplex filter	**DF2070**

Table 2

FILTER SIZE	
Length/elements	**CODE**
2 elements/side	**2**
3 elements/side	**3**

Table 3

DEGREE OF FILTRATION	
Element type	**CODE**
Microglass III	
Glassfibre 5 µm	05Q
Glassfibre 10 µm	**10Q**
Glassfibre 20 µm	**20Q**
Other medias	
Cellulose 15 µm (nom)	**015N**
Cleanable metal mesh 35 µm	035W
Cleanable metal mesh 60 µm	060W

Table 4

SEAL TYPE	
Seal material	**CODE**
Fluoroelastomer	**V**

Table 5

INDICATORS	
Options	**CODE**
No indicator block	**N**
Indicator port plugged	P
Visual indicator	**M3**
Electrical indicator	**T1**
Electronic indicator (PNP/N.O.)	F1
Electronic indicator (NPN/N.O.)	F2

Table 6

BYPASS VALVE	
Bypass/indicator setting	**CODE**
2.0 bar/1.5 bar	**H**

Table 7

FILTER CONNECTIONS	
Port size	**CODE**
Square flange 160 mm	**X160**

Table 8

OPTIONS	
Options	**CODE**
With bypass	**1**
PED category 2	P2

If several options are selected, please add the codes in order listed above.

REPLACEMENT ELEMENTS	
Media code	**Order code**
Glassfibre	**Microglass III**
05Q	939361Q
10Q	**939362Q**
20Q	**939363Q**
Cellulose 15 µm (nom)	
015N	939364
Cleanable metal mesh	
035W	939365
060W	939366

SPARE PARTS	
Secondary filter element (60 µm)	**CODE**
Length 2	939374
Length 3	939375
Seal kits	**CODE**
For valve assembly	916045064
For vessel (two kits required for complete filter)	916045067

Please note the bolded options reflect standard options with reduced lead-time.

Tel: +45 63 12 83 00 | Email: ps@hymatik.com | www.hymatik.com | Hvidkaervej 27a, DK-5250 Odense SV, Denmark



Together, we can change the course of hydraulic and lube maintenance history aboard ship and in dock.



DF40 Duplex Filters



EPF “iprotect” high pressure filter



iCountPD

Parker is the first name for filtration aboard ship, offshore and on the dock with a unique blend of marine fuel and lube filtration products and innovative customer solutions. Everything from on-deck winches and cranes, power generators to the engine room and steering hydraulics require Parker quality filtration. For predictive maintenance needs there’s the Parker Fluid Contamination Monitoring programme with particle analysers, detectors and bottle sampling models for maximum portability.

For details please visit our website.

aerospace
climate control
electromechanical
filtration
fluid & gas handling
hydraulics
pneumatics
process control
sealing & shielding

ENGINEERING YOUR SUCCESS.

Parker

Parker Hannifin
Hydraulic Filter Division Europe
FDHB500UK.

Par-Test™

Laboratory Analysis Service



System performance does not rely on luck. Best practice for reducing cost of ownership

Oil Analysis service

The Par-Test service is a complete and comprehensive laboratory analysis performed on a small quantity of fluid supplied by the customer. Contamination monitoring and reporting of fluids has never been more important as part of the predictive maintenance and system monitoring programme.



Contact Information:

Parker Hannifin
Hydraulic Filter Division Europe

European Product Information Centre
Freephone: 00800 27 27 5374
(from AT, BE, CH, CZ, DE, EE, ES, FI, FR, IE, IT, PT, SE, SK, UK)
filtrationinfo@parker.com

www.parker.com/hfde

Product Features:

- The Par-Test service is a complete laboratory analysis service.
- Analysis is performed on a small quantity of fluid supplied by the customer.
- Parker Filtration has 3 European laboratory locations.
- The resulting Par-Test report is comprehensive in its detail.

Tel: +45 63 12 83 00 | Email: ps@hymatik.com | www.hymatik.com | Hvidkaervej 27a, DK-5250 Odense SV, Denmark

Par-Test™

Laboratory Analysis Service

Changes to ISO Standards

The impact on filter performance reporting and the contamination code.

The changes to ISO contamination and filtration standards were brought about to solve accuracy, tracability, and availability issues. It is important to remember that both real world hydraulic system cleanliness levels and actual system filter performance remain unchanged.

However, the reporting of cleanliness levels and filter performance has changed due to the new particle counter calibration and multi-pass test procedures.

The actual calibration method.

ISO 11171 is the new particle counter calibration method and utilises calibration fluid made from ISO Medium Test Dust (ISO MTD) suspended in MIL-H-5606. The calibration fluid is traceable to the National Institute of Standards and Technology (NIST) and is designated by NIST as Standard Reference Material (SRM) 2806. ISO 11171 is replacing ISO 4402 which is based on obsolete AC Fine Test Dust (ACFTD)

It is important to note that the ISO 11171 calibration method is based on a distribution of particles measured by their equivalent area diameter, whereas ISO 4402 is based on distribution of particles measured by their longest chord. Also, the NIST work utilised scanning electron microscopy for particles below 10µm in size, whereas sizing distribution on ACFTD utilised optical microscopy.

The charts to the right show the approximate particle size relationship between the calibration methods.

Chart 1 - ISO Comparison

Former two-digit ISO 4406:1987 5µm / 15µm 14 / 11
Former three-digit ISO 4406:1987 2µm / 5µm / 15µm 17 / 14 / 11
New three-digit ISO 4406:1999 4µm (c) / 6µm (c) / 14µm (c) 18 / 14 / 11

Chart 2 - Particle Size Comparison

ACTFD size (per ISO 4402:1991) µm	NIST size (per ISO 11171:1999) µm (c)
1	4.2
2	4.6
3	5.1
5	6.4
7	7.7
10	9.8
15	13.6
20	17.5
25	21.2
30	24.9
40	31.7





Parker Hannifin
Hydraulic Filter Division Europe
FDHB500UK/Par-Test

Laboratory Analysis Service

The Par-Test service is a complete laboratory analysis performed on a small quantity of fluid supplied by the customer.

Provision of a sampling bottle of known cleanliness and a pre-addressed bottle container, both of which are designed to be suitable for mailing, is part of the service.

Most contaminant in hydraulic or lube oil systems are invisible

Damage causing particles range from 5 to 40 micrometers in size, but the limit of human visibility is only 40 micrometers. Harmful particulate matter is often invisible, even in very high concentration. Also, acids, water and other fluid oxidation by-products cannot be easily detected by human senses. Some other means must be used to monitor fluid conditions.

Fluid analysis is the only method to check fluid conditions

Fluid analysis services may be as simple as a sample batch comparison. Or, a full laboratory treatment may be used to indicate the sources and quantity of contamination. In either case, important test results are achieved. Parker offers both types of services to fit your specific needs.

Ordering Information

Par-Test: laboratory fluid analysis

The purchase price for the Par-Test sample kit includes the pre-cleaned and sealed sample bottle, mailing tube with a pre-addressed label, sample information data sheet to be completely filled out by the end user and the complete laboratory analysis.

Par-Test: complete laboratory analysis

Par-Test is a complete laboratory analysis, performed on a small quantity of fluid. The test results are very comprehensive, and can include the following critical analysis:

- Spectrochemical analysis of over 20 wear metals and additives.
- Particle count reported over five size ranges. The particle count is expressed as an ISO cleanliness code. It is also plotted on a graph for better comparisons.
- Viscosity at 40°C, 100°C, Viscosity Index and TAN are reported.
- Water content is expressed as a % of volume. Many hydraulic systems may tolerate up to 300 ppm (.03%) of water contamination. Some bearing or lube oil systems must strictly limit water content.
- Analysis recommendations summarises Par-Test results and indicates what action should be taken to prevent any potential problems.
- Fast turnaround—test results are mailed back to you within 24-48 hours after receiving your fluid sample. Tests including Spectro-chemical analysis allow 7 days.

Par-Test: concise and complete

The Par-Test report you receive is neatly organised. You may quickly analyse the test results — or compare them to a previous sample. Using the same “unit number” on your sample information form will allow up to four test results listed on a single Par-Test report form. Par-Test belongs in your regular maintenance program. Comprehensive and accurate fluid analysis will help you prevent major hydraulic or lube oil system problems. Order Par-Test today (see below details) and see how easy and complete—fluid analysis can be.

Par-Test laboratory analysis service - Holland (Email: filtration.netherlands@parker.com) (all options)

Option	Reference code	Sample bottle included	Scope of analysis
1	6084000001	Yes	Particle count/Membrane/Water content/Microscopic photo
2	6084000003	Yes	Particle count/Water content/Spectro-chemical
3	6084000006	Yes	Particle count/Membrane/ Spectro-chemical/ Water content/Microscopic photo
Option	Reference code	Sample bottle included	Scope of supply
	6084000000	Yes	Empty bottle kit

Please consult your local Parker Hannifin representative for ordering your fluid analysis kit.
Environmental regulations may vary among countries with respect to shipment of oil samples. For Central European countries analysis is conducted in The Netherlands. Parker has multiple laboratories to cover other regional areas like Scandinavia and the United Kingdom.
Note: Please allow 24-48 hours of laboratory time plus mailing/shipping time to receive your test results.

Tel: +45 63 12 83 00 | Email: ps@hymatik.com | www.hymatik.com | Hvidkaervej 27a, DK-5250 Odense SV, Denmark

Par-Test™ Charts

Laboratory Analysis Service

PAR :TEST Fluid Analysis

PARKER NO.	CLIENT NO.	UNIT NO.
1000.	27	4714

OTHER 295 | LOCATION **RETURN** | FILTER MANUF **PARKER** | PUMP MODEL **LINE TRUCK** | FLUID MANUF | FLUID TYPE | MICRON RATING **10NOM** | NUMBER COPIES 2 | TYPE NUMBER 2

SAMPLE DATA

LAB#	DATE TAKEN/ TESTEN	DATE FILTER SERVICE
9261	30JUN89	
	02JUL89	
9262	28JUL89	
	30JUL89	
9263	20AUG89	
	22AUG89	

SPECTROCHEMICAL ANALYSIS VALUES ARE REPORTED IN PARTS PER MILLION (PPM) BY WEIGHT

LAB#	IRON	CHROMIUM	LEAD	COPPER	TIN	ALUMINIUM	NICKEL	SILVER	MANGANESE	SILICON	BORON	SODIUM	MAGNESIUM	CALCIUM	BARIUM	PHOSPHORUS	ZINC	MOLYBDENUM	TITANIUM	VANADIUM	CADMIUM
9261	3	0	0	2	0	0	0	0	0	9	0	0	2	29	291	339	233	0	0	0	0
9262	2	0	0	2	0	0	0	0	0	9	0	0	4	24	25	156	244	0	0	0	0
9263	1	1	0	1	0	0	0	0	0	7	0	0	1	29	24	133	207	0	0	0	0

PHYSICAL PROPERTY DATA

	VIS 40°C (VIS 104 °F)	VIS 100°C (VIS 212 °F)	WATER
	32.7	N/A	0
	32.8	N/A	0
	32.3	N/A	0

LAB#	ANALYSIS RECOMMENDATIONS ISO	RATING
9261	20/	17
9262	19/	14
9263	16/	12

PARTICLES PER 100 MILLILITER GREATER THAN INDICATED SIZE

>5	>15	>25	>50	>100
667,488	67,608	15,440	872	88
315,466	12,052	2,496	296	8
41,758	2,280	664	112	16

LAB# ANALYSIS RECOMMENDATIONS

9261 EXTREME LEVELS OF CONTAMINATION INDICATE POSSIBLE WEAR PROBLEMS. HIGHER PRESSURE SYSTEMS(.1500 PSI) SHOULD RECEIVE IMMEDIATE FILTRATION ATTENTION. SAMPLE AGAIN WITHIN 30 DAYS

9262 EXTREME LEVEL OF CONTAMINATION INDICATE POSSIBLE WEAR PROBLEMS. HIGHER PRESSURE SYSTEMS (>1500 PSI) SHOULD RECEIVE IMMEDIATE FILTRATION ATTENTION. SAMPLE AGAIN WITHIN 30 DAYS

9263 CLEANLINESS LEVEL SUITABLE FOR MOST SYSTEMS. SERVO CONTROLS REQUIRE CLEANER FLUID. CONTINUE REGULAR PREVENTIVE MAINTENANCE. SAMPLE AGAIN IN 2 - 3 MONTHS.

Since remedial advice is based on test results provided by others, and since corrective action, if any is performed by others, remedial advice is rendered without warranty or liability of any kind.

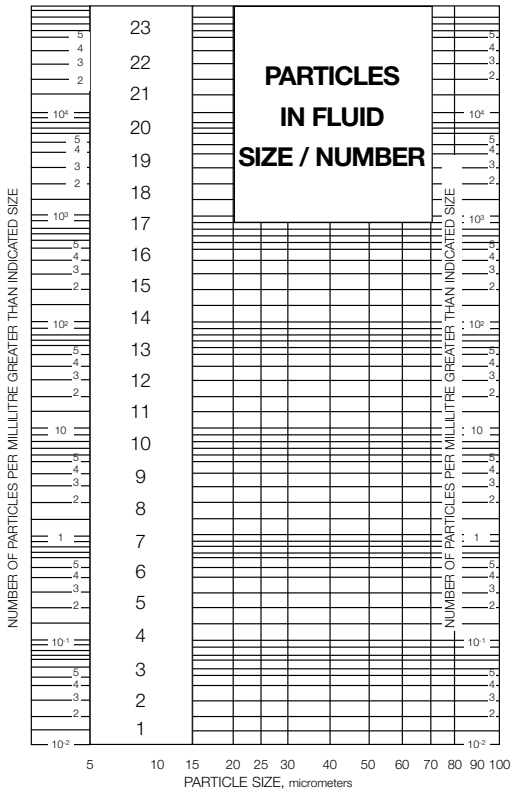

Viscosity Conversion Chart

cSt (centistrokes)	SUS (Saybolt Universal Seconds)
10	46
20	93
25	116
30	139
32.4	150
40	185
50	232
70	324
90	417

Comparisons are made at 100°F (38°C).
for other Viscosity Conversion Approximations, use the formula: $cSt = \frac{SUS}{4.635}$

Cleanliness Level Correlation Table

ISO Code	Particles/Millilitre ≥ 5 Micrometers	≥ 15 Micrometers	ACFTD Gravimetric Level, mg/L	NAS 1638 (1964)	Disavowed "SAE" Level (1963)
26/23	640,000	80,000	1000		
25/23	320,000	80,000			
23/20	80,000	10,000	100		
21/18	20,000	2,500		12	
20/18	10,000	2,500			
20/17	10,000	1,300		11	
20/16	10,000	640	10		
19/16	5,000	640	10		
18/15	2,500	320		9	6
17/14	1,300	160		8	5
16/13	640	80	1	7	4
15/12	320	40		6	3
14/12	160	20		5	2
14/11	160	20		5	2
13/10	80	10	0.1	4	1
12/9	40	5		3	0
11/8	20	2.5		2	
10/8	10	2.5			
10/7	10	1.3		1	
10/6	10	.64	0.01		

For more information: Contact Parker Filtration's Condition Monitoring Centre: Tel: +44 (0) 1842 763299.
Fax: +44 (0) 1842 756300. Email: conmoninfo@parker.com

Parker Hannifin
Hydraulic Filter Division Europe
FDHB500UK/Par-Test

Tel: +45 63 12 83 00 | Email: ps@hymatik.com | www.hymatik.com | Hvidkaervej 27a, DK-5250 Odense SV, Denmark

Guardian

Portable Hydraulic Filtration Systems
Max. 15 l/min - 3.4 bar



Making portable system cleanliness available all the time

A 'use anywhere' fluid transfer solution

The Guardian portable filtration system is designed to 'clean' new oil and deliver it to a system or carry out a clean up of used fluid to its original condition. Maximum pressure 3.4 bar. Maximum flow 15 l/min. A water removal element option is also available.



Contact Information:

Parker Hannifin
Hydraulic Filter Division Europe

European Product Information Centre
Freephone: 00800 27 27 5374
(from AT, BE, CH, CZ, DE, EE, ES, FI, FR, IE, IT, PT, SE, SK, UK)
filtrationinfo@parker.com

www.parker.com/hfde

Product Features:

- Guardian is designed to 'clean' new oil and deliver it to a system.
- Carries out a clean up of existing fluid to its original condition.
- Maximum pressure 3.4 bar. Maximum flow 15 l/min.
- Filters petroleum based oils, water emulsions and diesel fuels.

Guardian

Portable Hydraulic Filtration Systems

Features & Benefits

Features	Advantages
Portable and robust design	Guardian is designed to be used anywhere. Take it to the system or transfer new oil from the drum.
Lightweight design	Only 10.6 kg
Quick disconnect hose connections	Storage is simple. Guardian's compact design means it is easily stowed.
Visual indicator	Operational condition is constantly monitored
110VAC or 220/240VAC options	Guardian's power flexibility means it can be used anywhere.
A range of clean-up elements	A user can specify the media that will best achieve his clean up/filtering requirements.
Water removal element option	Water removal from the system is an important requirement for fluid efficiency.

Note: 15 l/min / Fluid transfer at a controlled rate

Application Example

A hydraulic system reservoir had become heavily contaminated and the hydraulic system was in danger of a catastrophic failure from particulate and water contamination. These contaminants were introduced from various points – airborne, wear and introduction of new 'dirty' fluids. The Guardian filtration system was installed into the hydraulic systems reservoir and run completely off-line for a period of time until acceptable contamination levels were achieved.

This off-line attachment allowed the hydraulic system to continue operating without costly downtimes. Additionally a Water Removal (WR) Element was also fitted to the Guardian, which radically reduced the water contamination within the entire system.

This customer will 'only now' introduce new fluids into his hydraulic application by using the Guardian filtration system and in addition utilises the Guardian off-line option to maintain and protect his system.

Contamination levels are monitored by an LCM202022 which controls the Guardians operation.

Result: reliability and complete confidence restored.

- Fluid transfer
- Offline reservoir clean-up
- Injection moulding machines
- Royal navy surface fleet systems
- Paper mills
- Industrial equipment
- Mobile equipment
- Marine system support



The Parker Filtration Guardian portable filtration systems.

Guardian is a portable filtration system with two main functions: to ensure that new 'dirty' fluid often contaminated during handling, is delivered to the system at a specific cleanliness; and to permit periodic clean up of existing fluid to original condition.

Recommended fluids: Petroleum based oils, water emulsions and diesel fuels.

Specification

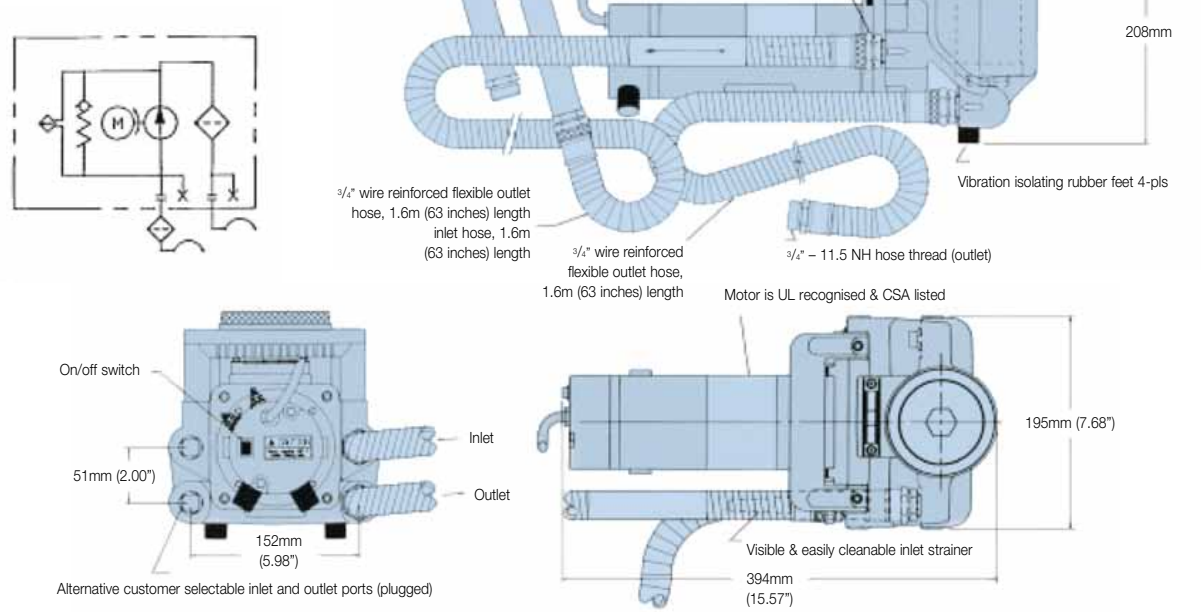



Tel: +45 63 12 83 00 | Email: ps@hymatik.com | www.hymatik.com | Hvidkaervej 27a, DK-5250 Odense SV, Denmark

Guardian

Portable Hydraulic Filtration Systems

Ordering Information and Product Configurator

Standard products table

Part number	Supersedes	Model (fluorocarbon)	Motor option	Element (µ)	Options	Plug type	Replacement element
GT4E110Q1UK	F3-GT4E-1-10Q-1-UK	GT4E	1	10Q	1	UK	**G04396Q**
GT4E110Q1EUR	F3-GT4E-1-10Q-1-EUR	GT4E	1	10Q	1	EUR	**G04396Q**
GT4E210Q1IND	F3-GT4E-2-10Q-1-IND	GT4E	2	10Q	1	IND	**G04396Q**

Note 1: Motor Options*
Option 1 = 220/240 VAC
Option 2 = 110 VAC.
Note 2: Plug Type**
IND = Industrial 110VAC UK Option.
Note 3: (Options) Quick disconnect hose connections are available. Consult Parker.
Note 4: The 24 Volt motor option is available. For details consult Parker.

Replacement elements

Guardian replacement elements to ISO16889		
Part number	**Media code**	**Media type**
G04396Q	10Q	Microglass III
G04394Q	02Q	Microglass III
G04395Q	05Q	Microglass III
G04397Q	20Q	Microglass III
G04400	25	Wire mesh
G04401	40	Wire mesh
G04402	74	Wire mesh
932019	WR	Water removal

Note 1: Part numbers featured with bold highlighted codes will ensure a 'standard' product selection.
Note 2: Alternate displayed part number selection will require you to contact Parker Filtration for availability.

Tel: +45 63 12 83 00 | Email: ps@hymatik.com | www.hymatik.com | Hvidkaervej 27a, DK-5250 Odense SV, Denmark

Filtration Unit

Hydraulic Service Equipment
Max. 15 l/min - 6 bar



Permanent and offline fluid cleaning

Reliable fluid transfer from drum to system

The Filtration unit offers both permanent and offline fluid cleaning where higher levels of contamination are expected. Maximum pressure 6 bar. Maximum flow 15 l/min. Designed to take the unit to the application for maximum efficiency in use.



Contact Information:

Parker Hannifin
Hydraulic Filter Division Europe

European Product Information Centre
Freephone: 00800 27 27 5374
(from AT, BE, CH, CZ, DE, EE, ES, FI, FR, IE, IT, PT, SE, SK, UK)
filtrationinfo@parker.com

www.parker.com/hfde

Product Features:

- Filtration unit offers both permanent and offline fluid cleaning where higher levels of contamination are expected.
- Lightweight design. Spin-on 10 micron Abs. element.
- Maximum pressure 6 bar. Maximum flow 15 l/min.
- Robust construction.

Filtration Unit

Hydraulic Service Equipment

Features & Benefits

Features	Advantages	Benefits
Single phase and three phase motor options	Flexibility of power output	End user choice dependent on application
15 l/min flow	Fluid transfer at a controlled rate	Reliable fluid transfer from drum to system
Red/green visual indicator	Clear indication of condition during operation	High visibility during operation
Robust construction	Reliability designed in	Designed to be used even in the most demanding conditions
Spin-on element	Easy change element	10 micron Abs. elements
Lightweight design	Easy to locate when and where required	Take the unit to the application. It's that easy

Typical Applications

- Fluid transfer
- Small lubrication systems
- Constant flushing loops
- Maintenance flushing
- Offline filtration in circuits where pressure and flow pulses are expected



The Parker Filtration Service Equipment.

Designed to offer both permanent and offline cleaning where higher levels of contamination are expected and portable additional clean-up capability as part of your preventative maintenance package.

Tel: +45 63 12 83 00 | Email: ps@hymatik.com | www.hymatik.com | Hvidkaervej 27a, DK-5250 Odense SV, Denmark

Specification

Electric motor

Frame Size: IEC Frame 63. Foot and flange 'D' (Flange IEC.F115). Totally enclosed fan cooled.
Windings: 380/420 volt 3 ph/50 Hz, 220 Volt 1 ph/50 Hz 110 Volt 1 ph/50 Hz.
Power: 0.18 kW (1/4 hp).
Speed: 1400 rev/min.

It is recommended that the Unit is wired independently from the main system when permanently installed, to facilitate the simple changing of the filter element without interrupting the main system.

Filtration unit description

The Parker 'Filtration Unit' consists of an electric motor directly coupled to a hydraulic pump, which has a built in bypass fitted and spin on filter element. Fluid drawn in at pump inlet is circulated through the filter element and is thus cleaned before being delivered from the outlet port. A built in bypass valve safeguards the element in the event of blockage and returns oil to the pump inlet, this ensures that all fluid output from the unit is filtered, whatever the operating conditions. A visual element condition indicator is fitted to the pump. A unit is available without electric motor for customers who prefer to supply their own. See installation notes and part numbers for ordering.

Pump and bypass valve

Pump: Lobe type for quiet running.
Flow: 15 l/min.
Connections: Inlet G1/2 (1/2" BSP).
Outlet G3/8 (3/8" BSP).
Bypass Valve: Cracks at 1.5 bar approximately. Bypassed oil is recirculated within the pump. Bypassed oil is reintroduced into the inlet port and does not pass the filter. Bypass operates when the element is contaminated and needs replacing. This condition will be made clear by the visual indicator. The Bypass Valve could also open when being used with high viscosity fluids, thus effectively reducing the unit output.

Filter and condition indicator

Filter Type: Rapid replacement spin-on can with 10µ cellulose element. Ensure that end clearance (20mm) is available to permit element withdrawal.
10µ absolute. MXR8550

Visual indicator

Has green and red zones on the dial. Needle in the green zone indicates normal operation. When the needle enters the red zone, the bypass valve will permit a flow of oil to return to the pump inlet – The element will then need to be replaced. The bypass is fully open when the needle is at the extreme of the red sector.

Sound level

The Filtration Unit under normal conditions will operate at a sound pressure level of approximately 65 dBA.

Installation Details

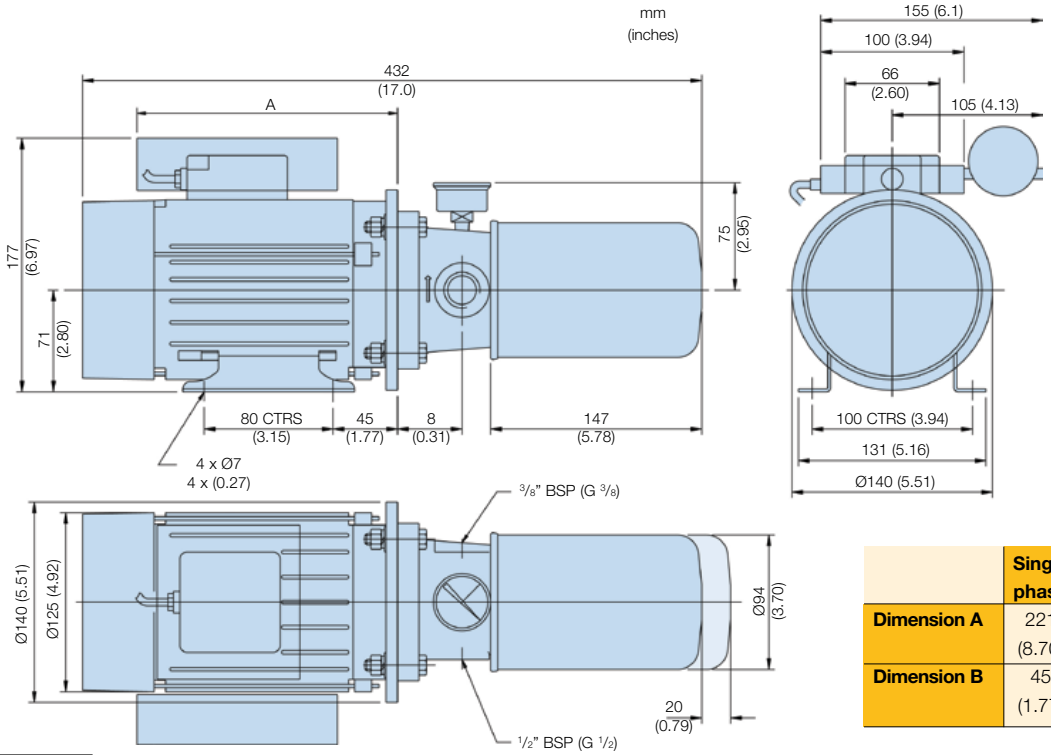

	Single phase	Three phase
Dimension A	221 (8.70)	184 (7.24)
Dimension B	45 (1.77)	25 (0.98)

Tel: +45 63 12 83 00 | Email: ps@hymatik.com | www.hymatik.com | Hvidkaervej 27a, DK-5250 Odense SV, Denmark

Filtration Unit

Hydraulic Service Equipment

Sectioned Detail

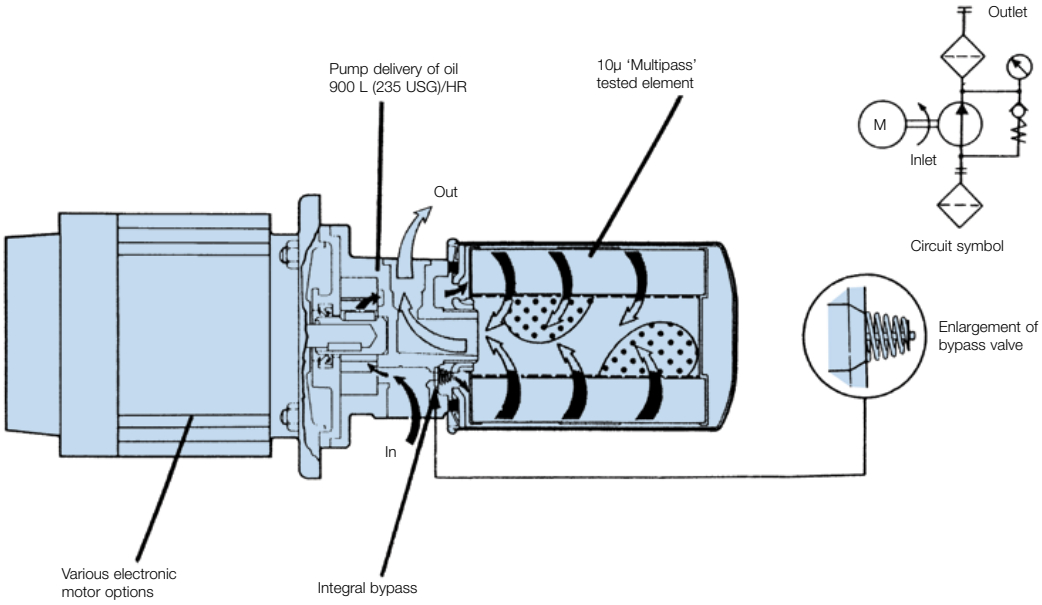

Installation and Operational Notes

The Filtration Unit is suitable for mineral based oils. Maximum viscosity at start up condition 850 centistokes-minimum viscosity 8 centistokes. Note that at 850 centistokes output will be reduced due to opening of bypass. Maximum operating temperature +90°C (194°F).

The inlet pipe should be as large and as short as convenient to reduce inlet depression to a minimum. It should not be less than 12mm (0.47") internal diameter.

Suction element SE75111110 is supplied with all assemblies and must be installed. Ensure that a minimum 75mm (2.95") head of oil is maintained above the suction element.

The outlet pipe should be as large as possible to reduce the possibility of delivery pressure exceeding the bypass valve setting. It should not be less than 10mm (0.39") internal diameter. The discharge end of this pipe should always be below the oil surface to minimise aeration. It is equally important, to ensure the ends of the inlet and outlet pipes are as far apart as possible. It is recommended that a baffle be positioned between the suction and return pipes, to give maximum circulation of oil.

Installation details – 2742

The Filtration Unit is available without an electrical motor, any type motor may be used of identical frame, flange and shaft size to that stated in the specification. Remove the key, fitted to electric motor shaft. There are four nuts and bolts M8-1.25mm thread supplied loose, the pump housing is complete with a shaft adaptor with internal drive pin.

To fit pump to electric motor simply insert drive shaft of motor into the pump drive adaptor ensuring the drive pin engages in shaft keyway and that the locating spigot are correctly engaged. Complete the assembly by fitting the four nuts, bolts and washers.

Tel: +45 63 12 83 00 | Email: ps@hymatik.com | www.hymatik.com | Hvidkaervej 27a, DK-5250 Odense SV, Denmark

Ideal Application

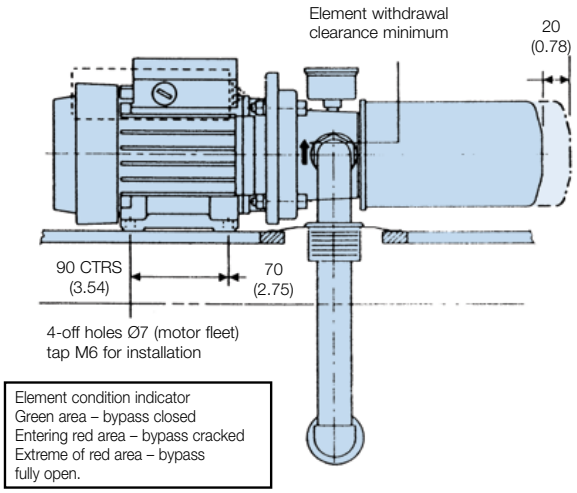

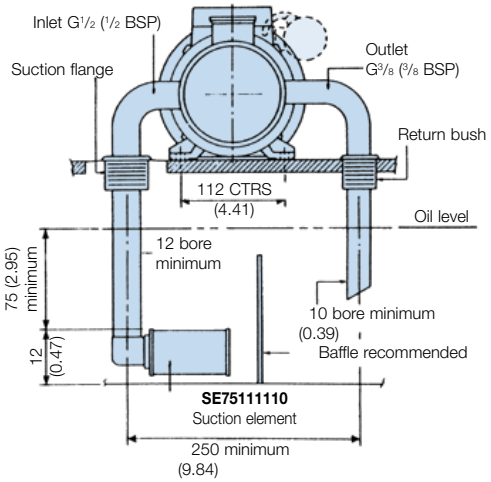

Ordering Information

Standard products table

Part number	Description	Weight	Replacement elements
2741	10µ abs. filtration pump complete with 3 phase electric motor (380/420/50 Hz H.E.F.C class F) visual indicator	5.92 Kg (13.02 lbs)	**MXR8550 (10µ abs.)**
2742	10µ abs. filtration pump without electric motor (supplied with 4 x nuts,bolts and washers) visual indicator	1.50 Kg (3.3 lbs)	
2743	10µ abs. filtration pump complete with single phase electric motor (220/50 Hz T.E.F.C class F) visual indicator	6.20 Kg (13.64 lbs)	
2744	10µ abs. filtration pump complete with single phase electric motor (110/50 Hz T.E.F.C class F) visual indicator	6.20 Kg (13.64 lbs)	

Note 1: Part numbers featured with bold highlighted codes will ensure a 'standard' product selection
Note 2: Alternate displayed part number selection will require you to contact Parker Filtration for Availability

Tel: +45 63 12 83 00 | Email: ps@hymatik.com | www.hymatik.com | Hvidkaervej 27a, DK-5250 Odense SV, Denmark

10MFP Series

with Moduflow *Plus*
Portable Filtration Trolley



The ideal way to pre-filter and transfer fluid

Transfer fluid from drums or storage tanks

Using a Parker portable filter trolley is the most economic way to protect your system from the harm that can be caused by contamination. *Option.* Consider specifying an icountPD particle detector to allow accurate detection of particulate when transferring oil.

The CE marked 10MFP filtration trolley will operate with a maximum recommended viscosity of 800 cSt.



Contact Information:

Parker Hannifin
Hydraulic Filter Division Europe

European Product Information Centre
Freephone: 00800 27 27 5374
(from AT, BE, CH, CZ, DE, EE, ES, FI, FR, IE, IT, PT, SE, SK, UK)
filtrationinfo@parker.com

www.parker.com/hfde

Product Features:

- 10MFP hydraulic trolley is the ideal way to pre-filter and transfer fluids into reservoirs or to clean up a system.
- Heavy-duty frame but still lightweight and portable.
- Maximum flow 38 l/min.
- CE marked.
- 10MFP trolley operating viscosity range - use below 800 cSt. (Note: icountPD recommended viscosity level is 108 cSt.)
- Par-Gel water removal elements available.
- icountPD particle detector with MS Moisture Sensor option.

10MFP Series

Portable Filtration Trolley

Applications for Portable Filtration Trolley

- **Filtering new fluid before putting into service**
- **Transferring fluid from drums or storage tanks to system reservoirs**
- **Conditioning fluid that is already in use**
- **Complimenting existing system filtration**
- **Removing free water from a system**
- **For use with fluids such as hydraulic, gear and lube oils**
- **Maximum viscosity is 800 cSt. The icountPD configuration with an online STI size 0 sensor allows a fluid viscosity range of 1 to 108 cSt**

Parker portable filter trolleys are the ideal way to prefilter and transfer fluids into reservoirs or to clean up existing systems.

Fluid should always be filtered before being put into use. New fluid is not necessarily clean fluid. Most new fluids (right out of the drum) are unfit for use due to high initial contamination levels. Contamination, both particulate and water, may be added to a new fluid during processing, mixing, handling and storage.

Water is removed by installing Par-Gel elements in the outlet filter. Par-Gel elements are made from a polymer which has a very high affinity for free water. Once water comes into contact with this material, it is removed from the system.

The Parker portable filter trolley uses two high capacity ModuFlow Plus filters for long element life and better system protection. The first stage (inlet) filter captures larger particles, while the second stage (outlet) filter controls finer particles or removes water. A rugged industrial quality gear pump gets the job done fast.

Using a Parker portable filter trolley is the most economical way to protect your system from the harm that can be caused by contamination.

Features	Advantages	Benefits
• Two filters instead of one w/ 2.5 times increased DHC	• Pump protection and long element life	• Element cost savings and trouble-free service
• Wide variety of particulate elements available	• Capable of getting a fluid to a desired cleanliness level	• Extends fluid life and system performance
• Par-Gel™ water removal elements available	• Removes “free water” from a system	• Gets dirt and water out of system with one process
• Heavy duty frame	• Rugged and durable	• Built to last for many years of use
• Lightweight and portable	• Easy to move from place-to-place	• One person operation
• 3.35 m hose and wand assemblies included	• Additional hardware not necessary	• Ready to use as received

Tel: +45 63 12 83 00 | Email: ps@hymatik.com | www.hymatik.com | Hvidkaervej 27a, DK-5250 Odense SV, Denmark

Features

Hose & wand assembly

- Ready to use
- Flexible hoses for tight spots
- Kink-resistant hose prevents pump cavitation

icountPD

- Independent monitoring of system contamination trends
- ISO code range 7 - 22
- Self diagnostic software
- Moisture sensor [%] RH

Service cover

- Top-accessible for easy changing of elements

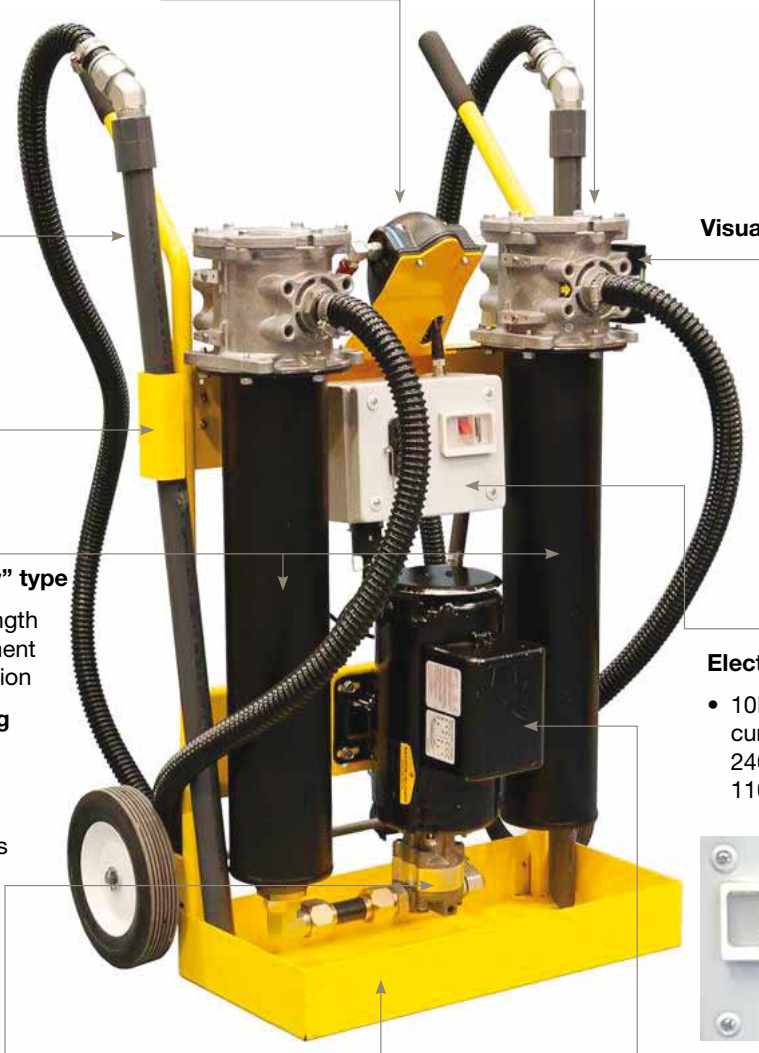

Visual indicator

Heavy Duty frame

Dual filters “Moduflow” type

- Two stage, double length filtration for long element life and pump protection

Elements (see ordering information)

- Available for both particulate and Water Removal (WR) options



Electrical Box

- 10MFP motor/pump current trip limiter set to 240V unit = 3.50 Amps 110V unit = 6.00 Amps



Gear pump

- Industrial quality
- Quiet operation
- Dependable, long life

Drip tray

- Helps keep the work area safe and clean

Technical specification

Dimensions (Approx.) (mm / inches)	A - Height : 1029mm / 40.5” B - Width : 648mm / 25.5” C - Depth : 483mm / 19”
Weight (Approx.) (Kg / lbs)	62kg / 137lbs
Principle of operation IPD	Laser diode for optical detection of actual particulates
International codes	ISO 7 - 22
icountPD calibration	By recognised online methods confirmed by the relevent ISO procedures: MTD - via a certified primary ISO 11171 automatic particle detector using ISO 11943 principles, with particle distribution reporting to ISO 4406:1996
icountPD recalibration	Every 12 months: **conmoninfo@parker.com**
Unit Ambient storage temperature	-26°C to +70°C (-79°F to + 158°F)
Unit operating environment	**DO NOT** use the filtration trolley in wet or damp environmental conditions
Recommended fluid operating viscosity	Up to 108 cSt (500 SUS) (0.85 Specific Gravity)
Filter trolley operating viscosity range	Use below 800 cSt (3880 SUS)

Pump Flow Rate	38 l/min (10 GPM)
1st stage filtration (Suction / Inlet Filter)	Micron rating specified in part number, visual indicator (Optional), 0.2 bar (3 psi) bypass preventing pump cavitation
2nd stage filtration (Pressure / Outlet Filter)	Micron rating specified in part number, visual indicator, 1.7 bar (25 psi) prevents excessive pressures
Suction / Pressure Hose	PVC (Standard, 1 metre (39”)
Suction Pressure Wand	PVC (Standard, 1 metre (39”)
Certification CE	IP22 rating EN61326-1-2006 Electrical equipment for measurement, control and laboratory EN61029-1-2009 + A11:2010 Modified Safety of transportable motor operated electric tools 2006/42/EC Machinery Directive
Construction	Cart frame = Steel Filter head = Aluminium Filter bowl = Steel Hoses = PVC (std.) Wands = PVC (std.) Steel tube
Electrical Motor	10MFP - ¾ hp@ 3450 rpm, O.D.P. Thermal overload protection.

New feature!

‘SmartCart’

A diagnostic filter trolley - the ‘SmartCart’. The icountPD particle detector can be mounted to the standard frame of the filter cart for enhanced monitoring of your hydraulic system.

Oil Type verses Recommended Kinematic Viscosity Chart for icountPD operation*.

Oil Type	Kinematic Viscosity @ 40°C in cSt	Kinematic Viscosity @ 30°C in cSt	Kinematic Viscosity @ 20°C in cSt	Kinematic Viscosity @ 10°C in cSt
ISO 7	7	9.5	13	19
ISO 10	10	14	20	32
ISO 15	15	25	35	60
ISO 22	21.6	35	60	108
ISO 32	32.2	55	90	180
ISO 46	46.3	80	140	280
ISO 68	60	120	220	450
ISO 100	96.7	280	350	800
ISO 150	147	300	550	1200
ISO 220	220	400	850	2000

* yellow boxes= the work range of 10MFP and icountPD operation

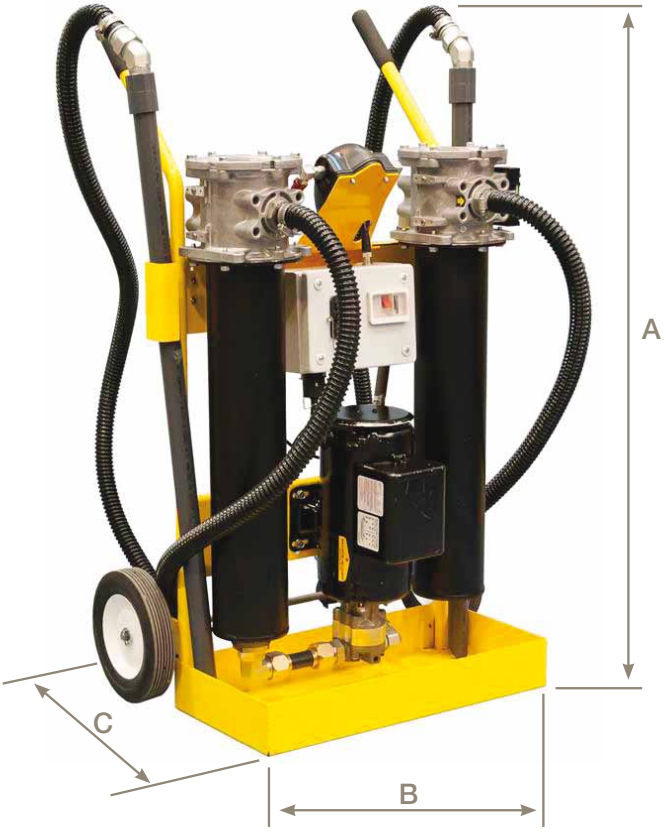

Typical Fluid Cleanliness Level Requirements

Many manufacturers of hydraulic components have established fluid cleanliness levels for their components. Using a portable filter trolley can be a very effective way to reach and maintain these cleanliness levels.

Component	ISO Cleanliness Level
Servo control valves	16/14/11
Proportional valves	17/15/12
Vane and piston pumps/motors	18/16/13
Directional and pressure control valves	18/16/13
Gear pumps/motors	19/17/14
Flow control valves cylinders	20/18/15
New fluid	20/18/15

Filter Trolley Element Performance

Media Code	Filter Media	Capacity (Grams)
40W	Woven Wire	*
40SA	Synthetic	*
20Q	Microglass III	140
10Q	Microglass III	135
05Q	Microglass III	130
02Q	Microglass III	110

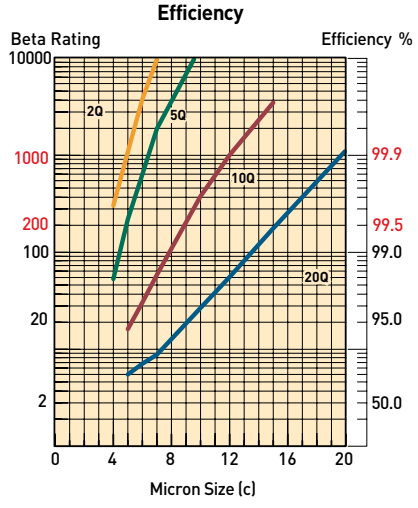

Notes: Multipass test run @ 80 l/pm to 3.5 bar terminal - 5 mg/l BUGL.

Filter Trolley Performance

Fluid cleanliness levels are a function of initial contamination levels, contamination ingression rates, reservoir size and filter element efficiency. The chart below lists approximate time requirements to achieve certain cleanliness levels based on the assumptions noted.

Reservoir Capacity (Litres)	Time Required (Hours)	Projected Cleanliness Level (ISO)
190	0.5	20/18/15
190	1.0	17/15/12
190	2.5	16/14/11
378	1.5	18/16/13
378	2.5	17/15/12
378	4.0	16/14/11
757	2.5	19/17/14
757	3.5	18/16/13
757	5.0	17/15/12

Notes:

The results in the chart are based on the following assumption:

1. Initial contamination level is 500,000 particles greater than 10 micrometers per 100 ml of fluid (10MFP trolley).
2. Inlet filter fitted with 40SA element; outlet with 20Q element.
3. System ingression rate equal to 1 X 10^6 particles greater than 10 micrometers entering the system per minute.

Par-Gel Media Water Capacity

Model	Fluid Viscosity	Capacity
10MFP	14cSt	500 ml
	43cSt	300 ml

Notes:

1. Par-Gel elements are designed to remove “free water”, which is defined as water that is above a particular fluid’s saturation level.
2. Capacity is very dependent on flow rate and viscosity. Not recommended with fluids in excess of 108 cSt (500 SUS).



Tel: +45 63 12 83 00 | Email: ps@hymatik.com | www.hymatik.com | Hvidkaervej 27a, DK-5250 Odense SV, Denmark

Assembly

1. Install hoses to inlet and outlet filters by threading the hose end with the straight thread o-ring seal fitting into the filter flange.
2. Connect the PVC tube wands to the swivel fitting on the hose end. When servicing the PVC tube wand, do not over-torque the metal fittings going into the PVC coupling. Over-torque will result in cracking the coupling. Generally, 1/4 turn beyond hand-tight is sufficient.

Operating Instructions

1. Insert the inlet wand assembly into the supply fluid receptacle (drum/reservoir). The RFP filter is the inlet filter.
2. Insert the outlet wand assembly into the clean fluid receptacle (drum/reservoir). The ILP fllter is the outlet filter.

Caution: Do not kink the hose assemblies, this may result in excessive vacuum or pressure at the pump.

3. Verify that the ON/OFF switch is OFF and plug the cord into the proper grounded power source (3 wire).
4. Turn switch to ON position and check outlet wand for oil flow. Allow 30 to 60 seconds for filters to fill with oil. If repeated attempts to obtain oil flow fail, check pump inlet fittings for tightness, remove inlet filter access cover and verify the cover sealing o-ring is in place. For very viscous fluids it may be necessary to pour 1 or 2 quarts of fluid into the RFP inlet filter housing to prime pump initially.
5. The condition of the filter element should be monitored by observing the cleanliness indicator on the outlet filter. When the indicator is in the CHANGE position, both inlet and outlet filter elements MUST be replaced to prevent fluid from going through the bypass in the filters.
6. The inlet filter element is provided with a 0.2 bar bypass spring, and prevents the pump from cavitating if the element is not changed. The outlet filter element is provided with a 2.4 bar bypass spring to prevent excessive pressure which may be harmful to personnel or to the filter trolley.

Warning: The filter bypass spring acts as a relief valve for the pump. Do not restrict the outlet hose with a shut-off valve which will defeat the function of the bypass valve, causing excessive pressure, which may be harmful to personnel or to the filter trolley.

7. The cleanliness indicator works on differential pressure and will indicate the condition of the element (CLEAN, CHANGE, or BYPASS).

NOTE: The filter trolley must be in operation for the indicator to read properly.

Maintenance Instructions

1. Turn switch to OFF position and unplug cord from electrical outlet.
2. Remove tube wands from oil to prevent siphoning.
3. Loosen hex head screws on filter cover. Turn cover to clear screws, remove cover.
4. Pull filter element from the filter head.

   a) Replace the synthetic or Microglass III elements. Verify replacement.

   b) Wire mesh elements can be cleaned. Ultrasonic cleaners provide best results.
5. Make sure element o-rings seat properly into the head, making sure that the notch on the element lines up with the notch in the head.
6. Inspect the cover o-ring and replace if necessary.
7. Relocate the cover and tighten hex head screws until they are snug. Do not over-torque these screws (Max torque is shown in maintenance leaflet). Do not interchange the inlet filter cover with the outlet filter cover. (The inlet filter has a “RFP” prefix, the outlet filter has a “ILP” prefix).
8. Contact the Parker HFDE regarding IPD calibration.
9. IPD removal: remove oil lines from the IPD at the two fittings closest to the IPD. Disconnect the two cables from the IPD. Remove IPD from trolley via two screws. The trolley can be used without the IPD as long as the sample hoses are removed from the System 20. Protect sampling connectors from contamination.

Trouble Shooting

Problem	Cause	Solution
Does not start	ON/OFF Switch	Turn switch ON, replace switch if defective
	No electrical power	Plug in cart
	Defective motor	Contact service department
No oil flow or erratic pump noise	Filter housing not filled with oil	Allow pump to run 30 to 60 seconds
	Suction leak	Check tightness of inlet fittings
		Check o-ring in inlet filter cover for nicks
		Kink or restriction in inlet hose
		Add 1 or 2 quarts of oil to inlet filter
	Defective pump	Contact service department
Indicator reads CHANGE or BYPASS	Element dirty	Replace or clean elements (both filters)
	Oil extremely cold or viscous	Change element to coarser micron rating
Indicator does not seem to move	No outlet element	Install element
	40 micron element installed in outlet filter	Check trolley model number to verify correct element. The inlet filter has a rating RFP prefix; the outlet filter has an ILP prefix

Tel: +45 63 12 83 00 | Email: ps@hymatik.com | www.hymatik.com | Hvidkaervej 27a, DK-5250 Odense SV, Denmark

Filter Trolley Spare Parts List

(For more information consult Parker)

Part No.	Description	Qty
928690	Frame	1
941468	Frame (SmartCart)	1
940980	Pipe Reducer Fitting	1
940979	Tube Fitting	1
937526	Suction Tube Assy.	1
928652	Adapter Fitting	1
928731	Pump	1
940977	Adapter Fitting	1
928650	Wheel	2
928653	Axle	1
928678	Motor 10MFP	1
937527	Discharge Tube Assy.	1
941467	Discharge Tube Top (SmartCart)	1
941466	Discharge Tube Bottom (SmartCart)	1
STI.0144.100	System 20 (SmartCart)	1
3/8-8F40HG5S	System 20 Fitting 1 (SmartCart)	2

Part No.	Description	Qty
12/8 F50X-S	System 20 Fitting 2 (SmartCart)	2
940978	Tube Fitting	1
928623	Cord Reel	1
940960	Inlet Filter – Nitrile	1
941024	Inlet Filter – Fluorocarbon	1
928784	Tube Wand Assy. – Seal Option B	2
940961	Outlet Filter – Nitrile	1
941025	Outlet Filter – Fluorocarbon	1
928663	Hose Assy. – Seal Option B	2
928651	Handle Grip	2
See Chart**	Element, (1) Inlet & (1) Outlet	2
See Chart**	Icount PD	1
ACC6NN014	Icount Cable	1
ACC6NH001	Icount Hoses	2
ACC6NW009	Icount Fitting 2	2

***Refer to chart on the ordering information page.*

Ordering Information

Standard Products Table - icount PD fitted option

Part Number	Model	Motor Option	Inlet element	Outlet element	Filter bowl length	Electrical plug type	Standard fitted elements	
							Inlet	Outlet
10MFP140SA10Q1UKPD	10MFP	1*	40 SA	10Q	1	UK	940802	937399Q
10MFP140SA10Q1EURPD	10MFP	1*	40 SA	10Q	1	EUR	940802	937399Q
10MFP240SA10Q1INDPD	10MFP	2*	40 SA	10Q	1	IND**	940802	937399Q

Standard Products Table - Standard trolley specification

Part Number	Model	Motor Option	Inlet element	Outlet element	Filter bowl length	Electrical plug type	Standard fitted elements	
							Inlet	Outlet
10MFP140SA10Q1UK	10MFP	1*	40 SA	10Q	1	UK	940802	937399Q
10MFP140SA10Q1EUR	10MFP	1*	40 SA	10Q	1	EUR	940802	937399Q
10MFP240SA10Q1IND	10MFP	2*	40 SA	10Q	1	IND**	940802	937399Q

Note 1: Motor options* Option 1 = 220/240 VAC. Option 2 = 110 VAC.
Note 2: Plug Type** IND = industrial 110 VAC UK option.
Note 3: PD = icountPD, type IPD12322230.
Note 4: Standard items (Part number shown in bold type) are in stock.

Replacement filter element part numbers

Parker Moduflow Plus inlet filter (suction) 0.2 bar bypass	Nitrile
20µ Microglass III element	940971Q
40µ synthetic element	940802
40µ stainless steel element	940803

Parker Moduflow Plus outlet filter (pressure) 2.4 bar bypass	Nitrile
2µ Microglass III element	937397Q
5µ Microglass III element	937398Q
10µ Microglass III element	937399Q
20µ Microglass III element	937400Q
Water removal element	940734

Accessory part numbers

Description	Reference	Part Number
Mains cable (UK 2m cable, 230V~)		ACC6JE001
Mains cable (EUR 2m cable, 230V~)		ACC6JE002
N72530 Filter cover 0-ring replacement (x2)		ACC6NX003

Description	Reference	Part Number
10MFP UK extension reel length 7.5m	**Contact Parker**	ACC6JE004
10MFP EUR extension reel length 7.5m	**Contact Parker**	ACC6JE005

PVS Series - Models 185, 600, 1200, 1800 and 2700

Portable Purification Systems



Reduce the catastrophic results of water contamination

Eliminate water from the hydraulic system

The PVS Series Portable Purification Systems, available in several models, is used to draw water contaminated fluid out of a system, remove the water content and return the 'clean' fluid to the reservoir. Maximum flow 170 l/min (PVS2700). Reduce the catastrophic results of water contamination.



Contact Information:

Parker Hannifin
Hydraulic Filter Division Europe

European Product Information Centre
Freephone: 00800 27 27 5374
(from AT, BE, CH, CZ, DE, EE, ES, FI, FR, IE, IT, PT, SE, SK, UK)
filtrationinfo@parker.com

www.parker.com/hfde

Product Features:

- PVS draws water contaminated fluid out of a system.
- Removes water, air and particulate content and returns the 'clean' fluid to the reservoir.
- Maximum flow 170 l/min (PSV2700).
- Reduce the catastrophic results of water contamination.

PVS Series
Portable Purification Systems

Effects of Water Contamination

Water is one of the most common and destructive contaminants in a fluid system. When water contaminates a system, it can cause serious problems such as:

- Corrosion by etching metal
- Fluid breakdown, reduction of lubricating properties, additive precipitation, and oil oxidation
- Reduced dielectric strength
- Abrasive wear in hydraulic components

Typical saturation points

Fluid type	PPM	%
Hydraulic fluid	300	.03%
Lubrication fluid	400	.04%
Transformer fluid	50	.005%

Free water occurs when oil becomes saturated and cannot hold any more water. This water is usually seen as cloudy oil or puddles of water at the bottom of an oil reservoir. Water which is absorbed into the oil is called dissolved water. At higher temperatures, oil has the ability to hold more water in the dissolved stage due to the expansion of oil molecules. As the oil cools, this ability reverses and free water will appear where not visible before. In addition to temperature, fluid type also determines the saturation point for your system (see chart above).

Effect Of Water In Oil On Bearing Life

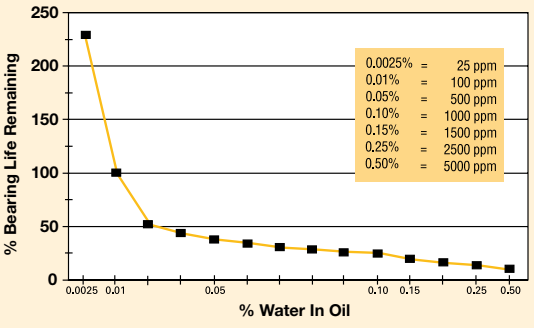

Effect of water in oil on bearing life (based on 100% life at .01% water in oil.)
Reference: "Machine Design" July 86, "How Dirt And Water Effect Bearing Life" by Timken Bearing Co.

Principles of Operation

Contaminated oil is drawn into the Parker portable purification system by a vacuum of 25 In/Hg. The oil passes through the in-line low watt density heater/s where the oil is heated to an optimum temperature of 66°C (150°F).

The oil then enters the distillation column where it is exposed to the vacuum through the use of dedicated dispersal elements. This increases the exposed surface area of the oil and converts the water to a vapor form, which is then drawn through the condenser by the vacuum pump. The vapour returns to water and drops into the condensate holding tank - this can then be drained off at a later stage.

The water-free oil falls to the bottom of the vacuum chamber and is passed through a final particulate removal filter by a heavy duty lube oil pump.

Clean dry oil re-enters the reservoir/system via the outlet port.

Tel: +45 63 12 83 00 | Email: ps@hymatik.com | www.hymatik.com | Hvidkaervej 27a, DK-5250 Odense SV, Denmark

Applications for PVS Portable Purification Systems

- **Paper mills**
  - Dryer lubrication
  - Hydraulic
  - Compressor lubrication
  - Calenders
- **Steel mills**
  - Bearing lubrication
  - Continuous casters
  - Press roll lubrication
- **Power generation**
  - Turbine oil
  - Transformer oil
  - EHC systems
- **Industrial/aerospace**
  - Test stands
  - Machine tools



Features	Advantages	Benefits
Variable flow circuit	Allows oil to heat to required temperature quickly	Starts removing water quickly
Moisture sensor	Real-time water content indication	Indicates when safe water content level is obtained
Condensate holding tank	Captures removed water/solvents Large enough to provide long service interval	Eliminate potential hazard of exhausting to atmosphere Reduced maintenance costs
Compact size	Smallest envelope in the industry Ease of portability	Fits through doorways and down narrow aisles Increased use
Forklift guides Lifting eyes	Provides safe and secure method to lift unit	Employee safety Easily transported
Programmable thermostat	Maintains oil within 1°C Prevents overheating oil	Unattended operation Increases oil life
Automatic operation	Unattended use	Reduced labour costs Increased running time
Reverse pole switch/phase fail	Change motor rotation for different power source locations	Flexibility, less maintenance Prevents incorrect rotation
High temperature safety circuit	Shuts down heater if primary contacters fail Oil can never exceed 120°C (250°F)	Prevents system damage Worker safety
Circuit breakers utilised in electrical panel	No fuses to replace Simple diagnostics	Fewer spare parts, increased uptime Reduced maintenance
Available with EPR seals and stainless steel	Phosphate ester compatible	Specifically designed for application
Solid state heater contacter	Longer more reliable service life	Reduced downtime

PVS Series

Portable Purification Systems

Potential contaminant	PVS performance
Solid particulate 14/13/10 attainable	ISO cleanliness code*
Water 80-90% of dissolved water.	Removes 100% of free water,
Air 90% of dissolved air.	Removes 100% of free air,
Gases 90% of dissolved gases.	Removes 100% of free gases,

* When utilising 2Q media

PVS (Vacuum dehydration) compared to other technologies

Centrifuge units – Removes free water only; has difficulty breaking stable emulsions; larger envelope dimensions but lower flows; higher initial and operating costs.

Desiccant units – Have limited water removal capability due to absorbing material; only removes air ingressed particles; expensive compared to the volume of water removed.

Coalescer units – Removes free water only; has difficulty breaking stable emulsions; does not work well in viscous fluids (>23cSt); much larger in size compared to PVS.

Typical Performance

Tank size	**227 litres (50 gallons)**
Run time	**62 minutes**
Parker model	**PVS 600 (37.9 l/min)**
Water content (ppm)	**Start: 10,000 PPM (1.0%)** **Stop: 50 PPM(0.005%)**
Contamination level	**Start: ISO 21/18/16** **Stop: ISO 16/14/11**



Start **Stop**

Estimated Water Removal Time
5000 ppm (0.5%) to 150 ppm (0.015%)

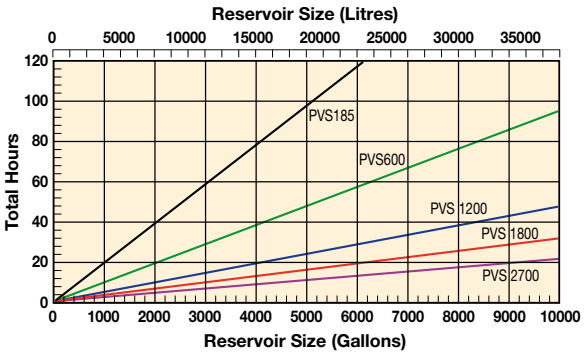

Parker Hannifin
Hydraulic Filter Division Europe
FDHB500UK/PVS

PVS 185

Portable Purification Systems

Specification

Flow rate:
19 lpm (4.2 gpm).

Height:
1651mm (65").

Width:
825.5mm (32.5").

Length:
1206.5mm (47.5").

Weight:
294.8 kg (650 lbs).

Seal material:
Fluorocarbon (EPR opt.).

Condensate tank:
15.5 ltrs (3.4 gals).

Dispersal elements:
1.

Minimum operating capacity:
18.9 ltrs (4.2 gals).

Vacuum (max):
25 In/Hg.

Viscosity (max):
108 cSt (500sus) – disposable.
460 cSt (2150 sus) – packed tower.

Outlet pressure (max):
4.1 bar (60 psi).

Ports:
3/4" JIC (male) inlet.
3/4" JIC (male) outlet.

FLA (full load amps):
15-41 amps.
(Depending on voltage used).



Replacement elements		
Standard Coreless Particulate 80CN-2		
02QE	(2 micron)	936716Q
05QE	(5 micron)	936717Q
10QE	(10 micron)	936718Q
20QE	(20 micron)	936719Q
Option Coreless Particulate IL8-3		
02QE	(2 micron)	933734Q
05QE	(5 micron)	933612Q
10QE	(10 micron)	933735Q
20QE	(20 micron)	933736Q
Dispersal		
Disposable (Coalescing)		933180
Packed tower (Cleanable)		933553

PVS 185 flow diagram

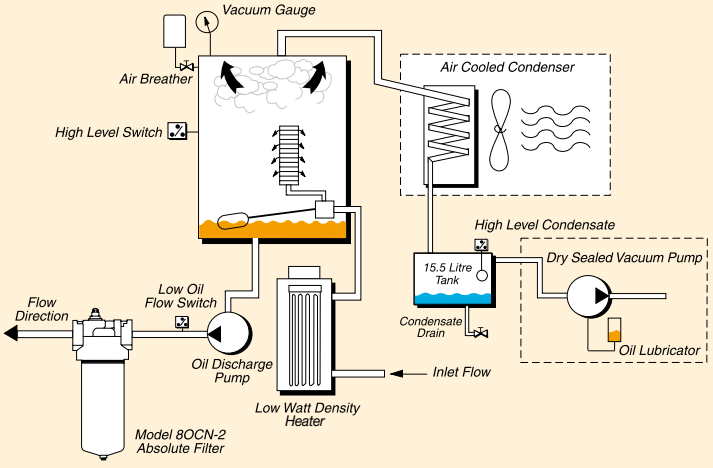

Parker Hannifin
Hydraulic Filter Division Europe
FDHB500UK/PVS

PVS 600

Portable Purification Systems

Specification

Flow rate:
38 lpm (8.3 gpm).

Height:
1638.3mm (64.5").

Width:
1117.6mm (44").

Length:
1549.4mm (61").

Weight:
408.2 kg (900 lbs).

Seal material:
Fluorocarbon (EPR opt.).

Condensate tank:
15.5 ltrs (3.4 gals).

Dispersal elements:
2.

Minimum operating capacity:
22.7 ltrs (5.0 gals).

Vacuum (max):
25 In/Hg.

Viscosity (max):
108 cSt (500sus) – disposable.
460 cSt (2150 sus) – packed tower.

Outlet pressure (max):
4.1 bar (60 psi).

Ports:
1" JIC (male) inlet.
1" JIC (male) outlet.

FLA (full load amps):
24-38 amps.
(Depending on options & voltages).



Replacement elements		
Standard Coreless Particulate 80CN-2		
02QE	(2 micron)	936716Q
05QE	(5 micron)	936717Q
10QE	(10 micron)	936718Q
20QE	(20 micron)	936719Q
Option Coreless Particulate IL8-3		
02QE	(2 micron)	933734Q
05QE	(5 micron)	933612Q
10QE	(10 micron)	933735Q
20QE	(20 micron)	933736Q
Dispersal		
Disposable (Coalescing)		933180
Packed tower (Cleanable)		933553

PVS 600 flow diagram

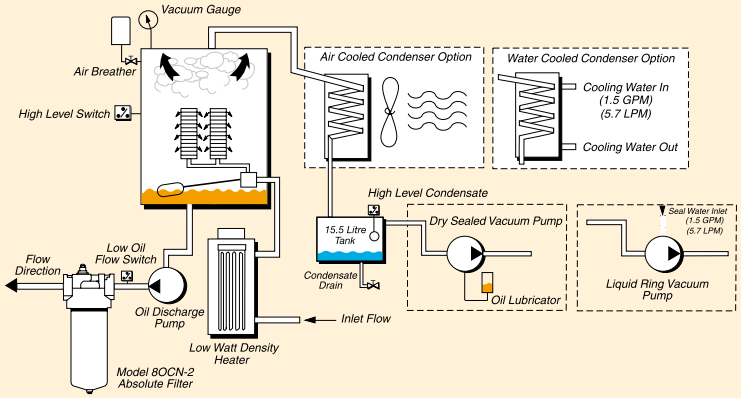

Parker Hannifin
Hydraulic Filter Division Europe
FDHB500UK/PVS

PVS 1200

Portable Purification Systems

Specification

Flow rate:
76 lpm (16.7 gpm).

Height:
1651mm (65").

Width:
1117.6mm (44").

Length:
1549.4mm (61").

Weight:
703.1 kg (1550 lbs).

Seal material:
Fluorocarbon (EPR opt.).

Condensate tank:
31.4 ltrs (6.9 gals).

Dispersal elements:
4.

Minimum operating capacity:
41.6 ltrs (9.1 gals).

Vacuum (max):
25 In/Hg.

Viscosity (max):
108 cSt (500sus) – disposable.
460 cSt (2150 sus) – packed tower.

Outlet pressure (max):
4.1 bar (60 psi).

Ports:
1 1/2" NPTF inlet.
1" JIC (male) outlet.

FLA (full load amps):
30-48 amps.
(Depending on options & voltages).



Replacement elements	
Coreless IL8-3	
02QE	933734Q
05QE	933612Q
10QE	933735Q
20QE	933736Q
Dispersal	
Disposable (coalescing)	933180
Packed tower (cleanable)	933553

PVS 1200 flow diagram

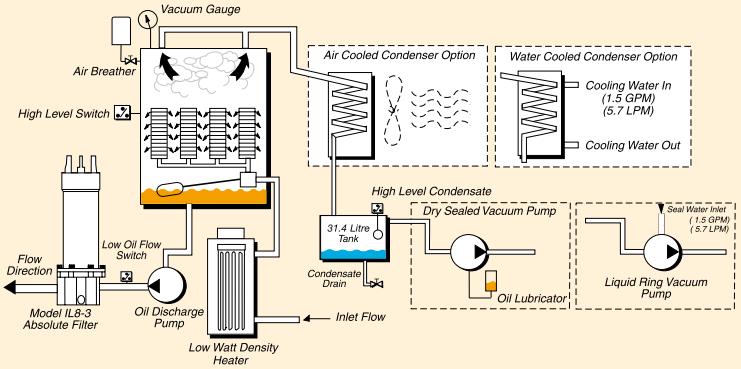

Tel: +45 63 12 83 00 | Email: ps@hymatik.com | www.hymatik.com | Hvidkaervej 27a, DK-5250 Odense SV, Denmark

PVS 1800

Portable Purification Systems

Specification

Flow rate:
114 lpm (25 gpm).

Height:
1651mm (65").

Width:
1066.8mm (42").

Length:
1943.1mm (76.5").

Weight:
1156.7 kg (2550 lbs).

Seal material:
Fluorocarbon (EPR opt.).

Condensate tank:
31.4 ltrs (6.9 gals).

Dispersal elements:
8.

Minimum operating capacity:
68.1 ltrs (14.98 gals).

Vacuum (max):
25 In/Hg.

Viscosity (max):
108 cSt (500sus) – disposable.
460 cSt (2150 sus) – packed tower.

Outlet pressure (max):
4.1 bar (60 psi).

Ports:
2" NPTF inlet.
1.5" JIC (male) outlet.

FLA (full load amps):
40-65 amps @ 460 V/60hz.



Replacement elements	
Coreless IL8-3	
02QE	933734Q
05QE	933612Q
10QE	933735Q
20QE	933736Q
Dispersal	
Disposable (coalescing)	933180
Packed tower (cleanable)	933553

PVS Specification Worksheet - Section 1

Note: The following information will be required before a PVS order can be processed.

1. Application.....

2. Fluid type..... Brand.....
   Grade ..... Specific Gravity.....

3. Viscosity Min ..... SUS/cSt @..... °F/°C
   Max..... SUS/cSt @..... °F/°C
   Normal..... SUS/cSt @..... °F/°C

4. Contamination level Current ISO level ___ /___ /___
   Desired PPM level ___ /___ /___

5. Water concentration Current ISO level.....
   Desired PPM level.....

6. Suction Head Positive/Negative ..... Ft./metres.....

7. Operating distance ..... Ft./metres .....

8. System fluid operating temperature: ..... °F/°C
   Is there a cooler?.....

9. Operating environment air temperature: (air cooled model)
   Min .....°F/°C
   Max .....°F/°C
   Normal.....°F/°C

PVS 2700

Portable Purification Systems

Specification

Flow rate:
170 lpm (37.4 gpm).

Height:
1651mm (65").

Width:
1066.8mm (42").

Length:
1943.1mm (76.5").

Weight:
1156.7 kg (2550 lbs).

Seal material:
Fluorocarbon (EPR opt.).

Condensate tank:
31.4 ltrs (6.9 gals).

Dispersal elements:
8.

Minimum operating capacity:
68.1 ltrs (14.98 gals).

Vacuum (max):
25 In/Hg.

Viscosity (max):
108 cSt (500sus) – disposable.
460 cSt (2150 sus) – packed tower.

Outlet pressure (max):
4.1 bar (60 psi).

Ports:
3" NPTF inlet.
2" NPTF outlet.

FLA (full load amps):
50-70 amps @ 460 V/60hz.



Replacement elements	
Coreless IL8-3	
02QE	933734Q
05QE	933612Q
10QE	933735Q
20QE	933736Q
Dispersal	
Disposable (coalescing)	933180
Packed tower (cleanable)	933553

PVS Specification Worksheet - Section 2

10. Water supply temperature: (liquid ring model)
    Min .....°F/°C
    Max .....°F/°C
    Normal.....°F/°C

11. Operating environment above/below sea level: ..... Ft./metres

12. Voltage Options: 230Vac, 3p, 60Hz (185,600)
    380Vac, 3p, 50Hz (185,600,1200,1800,2700)
    460Vac,3p,60Hz (185,600,1200,1800,2700)
    575vac, 3p 60Hz (185,600,1200,1800,2700)

13. Available amperage:.....

14. System volume: .....

15. Special requirements: .....
    .....
    .....

16. Any previous filtration problems with application: .....

17. PVS model selected: .....

Specification sheet must be completed before order can be entered

Tel: +45 63 12 83 00 | Email: ps@hymatik.com | www.hymatik.com | Hvidkaervej 27a, DK-5250 Odense SV, Denmark

PVS Range

Portable Purification Systems

Ordering Information

Product configurator

Select the desired symbol (in the correct position) to construct a model code.

Box 1	STD	Box 2	Box 3	Box 4	Box 5	Box 6	Box 7	Box 8	Box 9
-	PVS	600	460	DS	D	10QE	12	AC	CEPDL

Box 1

Seals	
Description	**Code**
Fluorocarbon	**None**
EPR	E8

Box 2

Flow rate	
Description	**Code**
19 lpm (4.2 gpm)	**185**
38 lpm (8.3 gpm)	**600**
76 lpm (16.7 gpm)	**1200**
114 lpm (25.0 gpm)	1800
170 lpm (37.4 gpm)	2700

Box 3

Power supply		
Model	**Description**	**Code**
185	380VAC, 3P, 50HZ	380
	460VAC, 3P, 60HZ	460
	575VAC, 3P, 60HZ	550
600	380VAC, 3P, 50HZ	380
	460VAC, 3P, 60HZ	460
	550VAC, 3P, 60HZ	550
1200	380VAC, 3P, 50HZ	380
	460VAC, 3P, 60HZ	460
	550VAC, 3P, 60HZ	550
1800	380VAC, 3P, 50HZ	380
	460VAC, 3P, 60HZ	460
	550VAC, 3P, 60HZ	550
2700	380VAC, 3P, 50HZ	380
	460VAC, 3P, 60HZ	460
	550VAC, 3P, 60HZ	550

Box 4

Vacuum pump	
Pressure setting	**Code**
Dry sealed	**DS**
Liquid ring	**LR**

Box 5

Dispersal element	
Description	**Code**
Disposable (coalescing)	**D**
Packed tower (cleanable – for use with viscious or highly contaminated fluids)	**P**

Box 6

Particulate element µm (c)	
Description	**Code**
2 micron Microglass III	02QE
5 micron Microglass III	05QE
10 micron Microglass III	10QE
20 micron Microglass III	20QE

Note: Above elements are rated for Beta 200+ (99.5% efficiency)

Box 7

Heater		
Model	**Description**	**Code**
185	12 KW (3 phase)	**12**
600	12 KW	**12**
	24 KW	24
1200	24 KW	**24**
1800	36 KW	36
2700	48 KW	48

Box 8

Condenser	
Description	**Code**
Air cooled	**AC**
Water cooled (External water)	**LC**
Air and water cooled	**BC**

Box 9

Options	
Description	**Code**
Standard	**None**
Pneumatic wheels	PNW
5" Dia. wheels	5DW
Auto condensate drain	ACD
Dirty filter light	DFL
Resetable hour meter	RHM
Sight flow indicator	SFI
Inlet control valve	ICV
CE marked	CE
Differental pressure gauge	DPG
3HP High viscosity circuit	3HP
Condensate drain counter	CDC
Cable reel	CR
Explosion Proof (Class 1, Div. 2, Zone 1&2)	EX2
Upgrade to IL8-3 coreless filter*	IL8
icountPD with LED display	PD
icountPD with LCD display	PDL

Note*: IL8 option available on 185 & 600 models and is standard on 1200 modles and larger.

Note 1: Contact parker for part number profile availability

Tel: +45 63 12 83 00 | Email: ps@hymatik.com | www.hymatik.com | Hvidkaervej 27a, DK-5250 Odense SV, Denmark

PAR◇FIT™

Hydraulic and Lubrication Interchangeable Element Range



Over 50,000 reasons to choose PAR◇FIT™

Quality interchange elements with a proven record

The Parfit range offers end users, maintenance engineers and manufacturers a range of over 50,000 Parker Parfit quality interchange elements using Microglass III and Ecoglass III media. Reduce stockholding, cut costs and ensure reliable and quality filter performance.



Contact Information:

Parker Hannifin
Hydraulic Filter Division Europe

European Product Information Centre
Freephone: 00800 27 27 5374
(from AT, BE, CH, CZ, DE, EE, ES, FI, FR, IE, IT, PT, SE, SK, UK)
filtrationinfo@parker.com

www.parker.com/hfde

Product Features:

- **PAR◇FIT**™ elements are manufactured to the same exacting standards as Parker original elements using Microglass III and Ecoglass III media.
- Quality backed by Parker's unrivalled technical resources.
- Reduce stockholding and costs by sourcing all your replacement elements from Parker.
- Interchange elements for Pall, Hydac, Mahle, Internormen, MP Filtri, Donaldson and over 300 more manufacturers.
- Cross reference information available for over 50,000 part numbers.

PAR◇FIT™

Hydraulic and Lubrication Interchangeable Element Range

Specification

Features	Advantages	Benefits
Microglass III replacement elements	Multi-layered design producing high dirt holding capacity and high efficiency	Great performance value
	Wire support reduces pleat bunching and keeps performance consistent	Reliable performance throughout element life
		Reduces downtime and maximizes element life
Coreless Ecoglass III replacement elements	No metal content in element	Environmentally friendly disposal by incineration
	Overall weight reduced by 50%	Lower element replacement costs
	Easy compaction of used elements	Lower disposal costs
	Eco adapters available	Retrofit coreless design to housings already installed
Complete performance data disclosure	All pertinent information is provided in an easy to compare format	No hidden deficiencies
		Easy selection of correct interchange part number
Elements manufactured to exacting standards of original elements	Performance guarantee as good if not better than original fit	Durable, rugged and reliable construction with high quality standards

Typical Applications

- **Industrial power units**
- **Mobile construction equipment**
- **Forestry equipment**
- **Marine power plants**
- **Agricultural equipment**
- **Lorry mounted cranes**
- **Waste management trucks**
- **Wheeled loaders**
- **Lift trucks**

There's only one solution

When it comes to replacement hydraulic and marine filter elements there is only one solution:

The **PAR◇FIT**™ interchangeable range.

With over 20,000 stocked, off the shelf variations, there's a **PAR◇FIT**™ element to fit most sizes and makes of filters on mobile, construction, agricultural and industrial plant.

Every **PAR◇FIT**™ element is manufactured in Europe to the highest standards and is backed by our unrivalled technical support and money back guarantees.

That means that you can reduce stockholdings, cut costs and be sure of the ultimate performance, with long, trouble free operating life.

PAR◇FIT™ filters are available from ParkerStores and authorised distributors throughout Europe.

www.parker.com/parfit

Hydac interchange element range

- The latest interchange elements range added are for the latest Hydac "R" type elements.
- Replacement sizes available are for Hydac: 0030, 0060, 0075, 0110, 0160, 0165, 0240, 0330 0500, 0660, 0850, 0950, 1300, 1700 and 2600.
- Featuring Fluroelastomer seals as standard for optimum performance.
- Top and bottom end caps manufactured from glass reinforced nylon.
- Top end cap includes integrated bypass assembly.
- Bottom end cap features a bayonet locking lug for use with the re-useable contamination retainer (Not supplied).
- Elements are suitable for use with the following Hydac housings: RD, RFD, RFM, RFL, RFLD, NF, NFD and oil service units as well as many OEM applications.

Tel: +45 63 12 83 00 | Email: ps@hymatik.com | www.hymatik.com | Hvidkaervej 27a, DK-5250 Odense SV, Denmark

PAR◇FIT™

Hydraulic and Lubrication Interchangeable Element Range



Part Numbers

Note: Bold and darker tint panel indicates the item is standard and available to order immediately.

Filter Element Competitor	Filter Element Competitor Part Number	Parker Part Number
Argo	Replaces P2.0620-51	PR4474
Argo	Replaces P2.0923-01	PR4473
Argo	Replaces P2.0933-01	PR4461
Argo	**Replaces P2.1217-12**	**PR4465**
Argo	**Replaces P2.1217-21**	**PR4466**
Argo	**Replaces P3.0510-00**	**PR4469**
Argo	**Replaces P3.0510-02**	**PR4475**
Argo	Replaces P3.0920-11	PR4464
Argo	**Replaces V2.1217-03**	**938194Q**
Argo	**Replaces V2.1217-08**	**PR4467**
Argo	**Replaces V2.1217-36**	**PR4468**
Argo	Replaces V3.0510-03	944074Q
Argo	Replaces V3.0510-06	944075Q
Argo	Replaces V3.0510-08	944076Q
Argo	**Replaces V3.0520-08**	**PR4476**
Argo	**Replaces V3.0607-06**	**PR4471**
Argo	**Replaces V3.0607-08**	**PR4472**
Argo	Replaces V3.0723-08	944097Q
Argo	Replaces V3.0933-08	944098Q
Donaldson	Replaces P163322	944012Q
Donaldson	Replaces P163323	944013Q
Donaldson	Replaces P163324	944014Q
Donaldson	Replaces P163405	944015Q
Donaldson	Replaces P163419	944016Q
Donaldson	Replaces P163496	944017Q
Donaldson	Replaces P164375	944022Q
Donaldson	Replaces P164378	944023Q
Donaldson	Replaces P164381	944024Q
Donaldson	Replaces P164384	944025Q
Donaldson	Replaces P164996	924732
Donaldson	Replaces P165104	924493
Donaldson	Replaces P165106	924489
Donaldson	Replaces P165114	924735
Donaldson	Replaces P165332	944027Q
Donaldson	Replaces P165335	944028Q
Donaldson	Replaces P165338	944029Q
Donaldson	Replaces P165354	944030Q
Donaldson	Replaces P165569	944035Q
Donaldson	Replaces P165659	944036Q
Donaldson	Replaces P165672	944037Q
Donaldson	Replaces P165675	944038Q
Donaldson	Replaces P165705	944039Q
Donaldson	Replaces P165786-24	922787
Donaldson	Replaces P165879	926170
Donaldson	Replaces P166204	908649
Donaldson	Replaces P169430	926541
Donaldson	Replaces P169553	924451
Donaldson	Replaces P169554	924449
Donaldson	Replaces P169555	924450
Donaldson	Replaces P169556	924452
Donaldson	Replaces P169558	924793
Donaldson	Replaces P169559	924791
Donaldson	Replaces P169560	924792
Donaldson	Replaces P170061	924467
Donaldson	Replaces P170063	908648
Donaldson	Replaces P170065	922625
Donaldson	Replaces P170066	922624

Filter Element Competitor	Filter Element Competitor Part Number	Parker Part Number
Donaldson	Replaces P170090	926372
Donaldson	Replaces P170092	926326
Donaldson	Replaces P170094	926327
Donaldson	Replaces P170095	907233
Donaldson	Replaces P170096	907234
Donaldson	Replaces P170098	924588
Donaldson	Replaces P170099	932635Q
Donaldson	Replaces P170481	930226
Donaldson	Replaces P170906	944040Q
Donaldson	Replaces P171273	944042Q
Donaldson	Replaces P171274	944043Q
Donaldson	Replaces P171275	944044Q
Donaldson	Replaces P171276	944045Q
Donaldson	Replaces P173616	909297
Donaldson	Replaces P176565	944032Q
Donaldson	Replaces P176566	944033Q
Donaldson	Replaces P176567	944047Q
Donaldson	Replaces P550251	927736
Donaldson	Replaces P551551	921999
Donaldson	Replaces P551553	925023
Donaldson	Replaces P556005	934476
Donaldson	Replaces SP0715	943999Q
Eaton Vickers	Replaces 737842	930091
Eaton Vickers	Replaces 737846	930110
Eaton Vickers	Replaces V3045B1H10	933576Q
Eaton Vickers	Replaces V3045V1H03	933577Q
Eaton Vickers	Replaces V3045V2H03	933578Q
Eaton Vickers	Replaces V3045V2H05	932620Q
Eaton Vickers	Replaces V3045V2H10	933579Q
Eaton Vickers	Replaces V30PV1C03	932622Q
Eaton Vickers	Replaces V30PV1C05	932623Q
Eaton Vickers	Replaces V30PV1C10	932624Q
Eaton Vickers	Replaces V30PV1C20	933135Q
Eaton Vickers	Replaces V30PV1H03	932625Q
Eaton Vickers	Replaces V30PV1H03	933580Q
Eaton Vickers	Replaces V30PV1H05	932626Q
Eaton Vickers	Replaces V30PV1H10	932627Q
Eaton Vickers	Replaces V30PV1H10	933581Q
Eaton Vickers	Replaces V30PV2C03	932628Q
Eaton Vickers	Replaces V30PV2C05	932629Q
Eaton Vickers	Replaces V30PV2C10	932630Q
Eaton Vickers	Replaces V30PV2C20	933136Q
Eaton Vickers	Replaces V30PV2H03	932631Q
Eaton Vickers	Replaces V30PV2H03	933582Q
Eaton Vickers	Replaces V30PV2H05	932632Q
Eaton Vickers	Replaces V30PV2H10	932633Q
Eaton Vickers	Replaces V30PV2H10	933583Q
Eaton Vickers	Replaces VCF2B1C05	924452Q
Eaton Vickers	Replaces VCF2B1C10	924453Q
Eaton Vickers	Replaces VCF2B2C10	934265Q
Eaton Vickers	Replaces VCF2V1C05	925039Q
Eaton Vickers	Replaces VCF2V1C10	925040Q
Eaton Vickers	Replaces VCF2V2C05	935534Q
Eaton Vickers	Replaces VCF2V2C10	935535Q
Eaton Vickers	Replaces VRF2B1C03	932686Q
Eaton Vickers	Replaces VRF2B1C05	932687Q
Eaton Vickers	Replaces VRF2B1C10	932688Q

PAR◇FIT™

Hydraulic and Lubrication Interchangeable Element Range

Part Numbers

Note: Bold and darker tint panel indicates the item is standard and available to order immediately.

Filter Element Competitor	Filter Element Competitor Part Number	Parker Part Number
Eaton Vickers	Replaces VRF2B1C20	933116Q
Eaton Vickers	Replaces VRF2B2C03	932692Q
Eaton Vickers	Replaces VRF2B2C05	932693Q
Eaton Vickers	Replaces VRF2B2C10	932694Q
Eaton Vickers	Replaces VRF2B2C20	933117Q
Eaton Vickers	Replaces VRF2V1C03	932689Q
Eaton Vickers	Replaces VRF2V1C05	932690Q
Eaton Vickers	Replaces VRF2V1C10	932691Q
Eaton Vickers	Replaces VRF2V1C20	933118Q
Eaton Vickers	Replaces VRF2V2C03	932695Q
Eaton Vickers	Replaces VRF2V2C05	932696Q
Eaton Vickers	Replaces VRF2V2C10	932697Q
Eaton Vickers	Replaces VRF2V2C20	933119Q
Eppensteiner	Replaces 1.0145 H6SL-A-000-P	936789Q
Eppensteiner	Replaces 1.561 H3SL-C-000-P(S)	936736Q
Eppensteiner	Replaces 1.561 H6SL-A-000-P	936869Q
Eppensteiner	Replaces 1.561 H6SL-C-000-P	936816Q
Eppensteiner	Replaces 1-0145 H3SL-A-000-P	936737Q
Eppensteiner	Replaces 2.0030 H6SL-A-000-P	938155Q
Eppensteiner	Replaces 2.0030 H6SL-B00-0-P	936784Q
Eppensteiner	Replaces 2.140H6SL-C-000-P	936787Q
Eppensteiner	Replaces 2.22 H6SL-C-000-P	936786Q
Eppensteiner	Replaces 2.56G2525-C-000-PS	936785Q
Eppensteiner	Replaces 9.05242 P25-S00-0-PX	944090Q
Filtration Products Corp	Replaces FPL1270B05G	935202
Filtration Products Corp	Replaces FPL1370B05G	935210
Filtration Products Corp	Replaces FPL2270B05G	935206
Filtration Products Corp	Replaces FPL2370B05G	935214
Fleetguard	Replaces HF7808	982131
Fleetguard	Replaces HF7809	983061
Hydac	Replaces 0015D010BN4HC	938156Q
Hydac	**Replaces 0030D003BH4HC**	**PR3035Q**
Hydac	**Replaces 0030D003BN4HC**	**PR3031Q**
Hydac	**Replaces 0030D005BH4HC**	**PR3036Q**
Hydac	**Replaces 0030D005BN4HC**	**PR3032Q**
Hydac	**Replaces 0030D010BH4HC**	**PR3037Q**
Hydac	**Replaces 0030D010BN4HC**	**PR3033Q**
Hydac	**Replaces 0030D020BH4HC**	**PR3038Q**
Hydac	**Replaces 0030D020BN4HC**	**PR3034Q**
Hydac	**Replaces 0030D025W**	**939159Q**
Hydac	**Replaces 0030R003BN4HC**	**938253Q**
Hydac	**Replaces 0030R005BN4HC**	**938254Q**
Hydac	**Replaces 0030R010BN4HC**	**938255Q**
Hydac	**Replaces 0030R020BN4HC**	**938256Q**
Hydac	**Replaces 0035D020BN4HC**	**937058Q**
Hydac	**Replaces 0060D003BH4HC**	**PR3064Q**
Hydac	**Replaces 0060D003BN4HC**	**PR3056Q**
Hydac	**Replaces 0060D005BH4HC**	**PR3065Q**
Hydac	**Replaces 0060D005BN4HC**	**PR3057Q**
Hydac	**Replaces 0060D010BH4HC**	**PR3066Q**
Hydac	**Replaces 0060D010BN4HC**	**PR3058Q**
Hydac	**Replaces 0060D020BH4HC**	**PR3067Q**
Hydac	**Replaces 0060D020BN4HC**	**PR3059Q**
Hydac	**Replaces 0060R003BN4HC**	**938257Q**
Hydac	**Replaces 0060R005BN4HC**	**938258Q**
Hydac	**Replaces 0060R010BN4HC**	**938259Q**
Hydac	**Replaces 0060R020BN4HC**	**938260Q**

Filter Element Competitor	Filter Element Competitor Part Number	Parker Part Number
Hydac	**Replaces 0075R003BN4HC**	**938261Q**
Hydac	**Replaces 0075R005BN4HC**	**938262Q**
Hydac	**Replaces 0075R010BN4HC**	**938263Q**
Hydac	**Replaces 0075R020BN4HC**	**938264Q**
Hydac	Replaces 0095D010BN4HC	938154Q
Hydac	**Replaces 0110D003BH4HC**	**PR3093Q**
Hydac	**Replaces 0110D003BN4HC**	**PR3085Q**
Hydac	**Replaces 0110D005BH4HC**	**PR3094Q**
Hydac	**Replaces 0110D005BN4HC**	**PR3086Q**
Hydac	**Replaces 0110D010BH4HC**	**PR3095Q**
Hydac	**Replaces 0110D010BN4HC**	**PR3087Q**
Hydac	**Replaces 0110D020BH4HC**	**PR3096Q**
Hydac	**Replaces 0110D020BN4HC**	**PR3088Q**
Hydac	**Replaces 0110R003BN4HC**	**938265Q**
Hydac	**Replaces 0110R005BN4HC**	**938266Q**
Hydac	**Replaces 0110R010BN4HC**	**938267Q**
Hydac	**Replaces 0110R020BN4HC**	**938268Q**
Hydac	**Replaces 0140D003BH4HC**	**937059Q**
Hydac	**Replaces 0140D003BN4HC**	**937060Q**
Hydac	**Replaces 0140D005BH4HC**	**937061Q**
Hydac	**Replaces 0140D005BN4HC**	**937062Q**
Hydac	**Replaces 0140D010BH4HC**	**937063Q**
Hydac	**Replaces 0140D010BN4HC**	**937064Q**
Hydac	**Replaces 0140D020BH4HC**	**937065Q**
Hydac	**Replaces 0140D020BN4HC**	**937066Q**
Hydac	**Replaces 0160D003BH4HC**	**PR3122Q**
Hydac	**Replaces 0160D003BN4HC**	**PR3114Q**
Hydac	**Replaces 0160D005BH4HC**	**PR3123Q**
Hydac	**Replaces 0160D005BN4HC**	**PR3115Q**
Hydac	**Replaces 0160D010BH4HC**	**PR3124Q**
Hydac	**Replaces 0160D010BN4HC**	**PR3116Q**
Hydac	**Replaces 0160D020BH4HC**	**PR3125Q**
Hydac	**Replaces 0160D020BN4HC**	**PR3117Q**
Hydac	**Replaces 0160R003BN4HC**	**938269Q**
Hydac	**Replaces 0160R005BN4HC**	**938270Q**
Hydac	**Replaces 0160R010BN4HC**	**938271Q**
Hydac	**Replaces 0160R020BN4HC**	**938272Q**
Hydac	**Replaces 0165R003BN4HC**	**938273Q**
Hydac	**Replaces 0165R005BN4HC**	**938274Q**
Hydac	**Replaces 0165R010BN4HC**	**938275Q**
Hydac	**Replaces 0165R020BN4HC**	**938276Q**
Hydac	**Replaces 0240D003BH4HC**	**PR3151Q**
Hydac	**Replaces 0240D003BN4HC**	**PR3143Q**
Hydac	**Replaces 0240D005BH4HC**	**PR3152Q**
Hydac	**Replaces 0240D005BN4HC**	**PR3144Q**
Hydac	**Replaces 0240D010BH4HC**	**PR3153Q**
Hydac	**Replaces 0240D010BN4HC**	**PR3145Q**
Hydac	**Replaces 0240D020BH4HC**	**PR3154Q**
Hydac	**Replaces 0240D020BN4HC**	**PR3146Q**
Hydac	**Replaces 0240D200WHC**	**938195Q**
Hydac	**Replaces 0240R003BN4HC**	**938277Q**
Hydac	**Replaces 0240R005BN4HC**	**938278Q**
Hydac	**Replaces 0240R010BN4HC**	**938279Q**
Hydac	**Replaces 0240R020BN4HC**	**938280Q**
Hydac	**Replaces 0330D003BH4HC**	**PR3180Q**
Hydac	**Replaces 0330D003BN4HC**	**PR3172Q**
Hydac	**Replaces 0330D005BH4HC**	**PR3181Q**

PAR◇FIT™

Hydraulic and Lubrication Interchangeable Element Range



Part Numbers

Note: Bold and darker tint panel indicates the item is standard and available to order immediately.

Filter Element Competitor	Filter Element Competitor Part Number	Parker Part Number
Hydac	**Replaces 0330D005BN4HC**	**PR3173Q**
Hydac	**Replaces 0330D010BH4HC**	**PR3182Q**
Hydac	**Replaces 0330D010BN4HC**	**PR3174Q**
Hydac	**Replaces 0330D020BH4HC**	**PR3183Q**
Hydac	**Replaces 0330D020BN4HC**	**PR3175Q**
Hydac	**Replaces 0330R003BN4HC**	**938281Q**
Hydac	**Replaces 0330R005BN4HC**	**938282Q**
Hydac	**Replaces 0330R010BN4HC**	**938283Q**
Hydac	**Replaces 0330R020BN4HC**	**938284Q**
Hydac	**Replaces 0480D003BH4HC**	**937067Q**
Hydac	**Replaces 0480D003BN4HC**	**937068Q**
Hydac	**Replaces 0480D005BH4HC**	**937069Q**
Hydac	**Replaces 0480D005BN4HC**	**937070Q**
Hydac	**Replaces 0480D010BH4HC**	**937071Q**
Hydac	**Replaces 0480D010BN4HC**	**937072Q**
Hydac	**Replaces 0480D020BH4HC**	**937073Q**
Hydac	**Replaces 0480D020BN4HC**	**937074Q**
Hydac	Replaces 0480R003BN4HC	944058Q
Hydac	Replaces 0480R005BN4HC	944059Q
Hydac	Replaces 0480R010BN4HC	944060Q
Hydac	Replaces 0480R020BN4HC	944061Q
Hydac	**Replaces 0500D003BH4HC**	**937075Q**
Hydac	**Replaces 0500D003BN4HC**	**937076Q**
Hydac	**Replaces 0500D005BH4HC**	**937077Q**
Hydac	**Replaces 0500D005BN4HC**	**937078Q**
Hydac	**Replaces 0500D010BH4HC**	**937079Q**
Hydac	**Replaces 0500D010BN4HC**	**937080Q**
Hydac	**Replaces 0500D020BH4HC**	**937081Q**
Hydac	**Replaces 0500D020BN4HC**	**937082Q**
Hydac	**Replaces 0500R003BN4HC**	**938285Q**
Hydac	**Replaces 0500R005BN4HC**	**938286Q**
Hydac	**Replaces 0500R010BN4HC**	**938287Q**
Hydac	**Replaces 0500R020BN4HC**	**938288Q**
Hydac	**Replaces 0660D003BH4HC**	**PR3209Q**
Hydac	**Replaces 0660D003BN4HC**	**PR3201Q**
Hydac	**Replaces 0660D005BH4HC**	**PR3210Q**
Hydac	**Replaces 0660D005BN4HC**	**PR3202Q**
Hydac	**Replaces 0660D010BH4HC**	**PR3211Q**
Hydac	**Replaces 0660D010BN4HC**	**PR3203Q**
Hydac	**Replaces 0660D020BH4HC**	**PR3212Q**
Hydac	**Replaces 0660D020BN4HC**	**PR3204Q**
Hydac	**Replaces 0660R003BN4HC**	**938289Q**
Hydac	**Replaces 0660R005BN4HC**	**938290Q**
Hydac	**Replaces 0660R010BN4HC**	**938291Q**
Hydac	**Replaces 0660R020BN4HC**	**938292Q**
Hydac	**Replaces 0850R003BN4HC**	**938293Q**
Hydac	**Replaces 0850R005BN4HC**	**938294Q**
Hydac	**Replaces 0850R010BN4HC**	**938295Q**
Hydac	**Replaces 0850R020BN4HC**	**938296Q**
Hydac	**Replaces 0950R003BN4HC**	**938297Q**
Hydac	**Replaces 0950R005BN4HC**	**938298Q**
Hydac	**Replaces 0950R010BN4HC**	**938299Q**
Hydac	**Replaces 0950R020BN4HC**	**938300Q**
Hydac	**Replaces 1300R003BN4HC**	**938301Q**
Hydac	**Replaces 1300R005BN4HC**	**938302Q**
Hydac	**Replaces 1300R010BN4HC**	**938303Q**
Hydac	**Replaces 1300R020BN4HC**	**938304Q**

Filter Element Competitor	Filter Element Competitor Part Number	Parker Part Number
Hydac	**Replaces 1700R003BN4HC**	**938305Q**
Hydac	**Replaces 1700R005BN4HC**	**938306Q**
Hydac	**Replaces 1700R010BN4HC**	**938307Q**
Hydac	**Replaces 1700R020BN4HC**	**938308Q**
Hydac	**Replaces 2600R003BN4HC**	**938310Q**
Hydac	**Replaces 2600R005BN4HC**	**938311Q**
Hydac	**Replaces 2600R010BN4HC**	**938312Q**
Hydac	**Replaces 2600R020BN4HC**	**938313Q**
Hydac	Replaces 0100RK010BN4HC	944091Q
Hydac	Replaces 0100RK015BN4HC	944092Q
Hydac	Replaces 1320D010BH4HC	941693
Internormen	**Replaces 01.E 170.10VG.30.E.V**	**938232Q**
Internormen	**Replaces 01.E 170.10VG.HR.E.V**	**938172Q**
Internormen	**Replaces 01.E 170.25VG.30.E.V**	**938233Q**
Internormen	**Replaces 01.E 170.25VG.HR.E.V**	**938173Q**
Internormen	Replaces 01.E 170.3VG.30.E.V	938230Q
Internormen	Replaces 01.E 170.3VG.HR.E.V	938170Q
Internormen	Replaces 01.E 170.6VG.30.E.V	938231Q
Internormen	Replaces 01.E 170.6VG.HR.E.V	938171Q
Internormen	**Replaces 01.E 210.10VG.16.S.V**	**938188Q**
Internormen	**Replaces 01.E 210.25VG.16.S.V**	**938189Q**
Internormen	Replaces 01.E 210.3VG.16.S.V	938186Q
Internormen	Replaces 01.E 210.6VG.16.S.V	938187Q
Internormen	**Replaces 01.E 30.10VG.30.E.V**	**938244Q**
Internormen	**Replaces 01.E 30.25VG.30.E.V**	**938245Q**
Internormen	Replaces 01.E 30.3VG.30.E.V	938242Q
Internormen	Replaces 01.E 30.6VG.30.E.V	938243Q
Internormen	**Replaces 01.E 320.10VG.16.S.V**	**938168Q**
Internormen	**Replaces 01.E 320.25VG.16.S.V**	**938169Q**
Internormen	Replaces 01.E 320.3VG.16.S.V	938166Q
Internormen	Replaces 01.E 320.6VG.16.S.V	938167Q
Internormen	**Replaces 01.E 360.10VG.30.E.V**	**938220Q**
Internormen	**Replaces 01.E 360.10VG.HR.E.V**	**938176Q**
Internormen	**Replaces 01.E 360.25VG.30.E.V**	**938221Q**
Internormen	**Replaces 01.E 360.25VG.HR.E.V**	**938177Q**
Internormen	Replaces 01.E 360.3VG.30.E.V	938218Q
Internormen	Replaces 01.E 360.3VG.HR.E.V	938174Q
Internormen	Replaces 01.E 360.6VG.30.E.V	938219Q
Internormen	Replaces 01.E 360.6VG.HR.E.V	938175Q
Internormen	**Replaces 01.E 425.10VG.16.E.V**	**938236Q**
Internormen	**Replaces 01.E 425.10VG.16.S.V**	**938192Q**
Internormen	**Replaces 01.E 425.25VG.16.E.V**	**938237Q**
Internormen	**Replaces 01.E 425.25VG.16.S.V**	**938193Q**
Internormen	Replaces 01.E 425.3VG.16.E.V	938234Q
Internormen	Replaces 01.E 425.6VG.16.E.V	938235Q
Internormen	**Replaces 01.E 450.10VG.30.E.V**	**938224Q**
Internormen	**Replaces 01.E 450.10VG.HR.E.V**	**938216Q**
Internormen	**Replaces 01.E 450.25VG.30.E.V**	**938225Q**
Internormen	**Replaces 01.E 450.25VG.HR.E.V**	**938217Q**
Internormen	Replaces 01.E 450.3VG.30.E.V	938222Q
Internormen	**Replaces 01.E 450.3VG.HR.E.V**	**938214Q**
Internormen	Replaces 01.E 450.6VG.30.E.V	938223Q
Internormen	Replaces 01.E 450.6VG.HR.E.V	938215Q
Internormen	**Replaces 01.E 631.10VG.16.S.V**	**938212Q**
Internormen	**Replaces 01.E 631.25VG.16.S.V**	**938213Q**
Internormen	Replaces 01.E 631.3VG.16.S.V	938210Q
Internormen	Replaces 01.E 631.6VG.16.S.V	938211Q

Tel: +45 63 12 83 00 | Email: ps@hymatik.com | www.hymatik.com | Hvidkaervej 27a, DK-5250 Odense SV, Denmark

PAR◇FIT™

Hydraulic and Lubrication Interchangeable Element Range

Part Numbers

Note: Bold and darker tint panel indicates the item is standard and available to order immediately.

Filter Element Competitor	Filter Element Competitor Part Number	Parker Part Number
Internormen	**Replaces 01.E 90.10VG.HR.E.V**	**938240Q**
Internormen	**Replaces 01.E 90.25VG.HR.E.V**	**938241Q**
Internormen	Replaces 01.E 90.3VG.HR.E.V	938238Q
Internormen	Replaces 01.E 90.6VG.HR.E.V	938239Q
Internormen	**Replaces 01.E.240.10VG.HR.E.V**	**938228Q**
Internormen	**Replaces 01.E.240.25VG.HR.E.V**	**938229Q**
Internormen	Replaces 01.E.240.3VG.HR.E.V	938226Q
Internormen	Replaces 01.E.240.6VG.HR.E.V	938227Q
Internormen	**Replaces 01.E.425.3VG.16.S.V**	**938190Q**
Internormen	Replaces 01.E.425.6VG.16.S.V	938191Q
Internormen	**Replaces 01.NBF 25-40.3VL.B.P**	**938251Q**
Internormen	**Replaces 01.NBF 55-85.3VL.B.P**	**938252Q**
Internormen	**Replaces 01.NL 100.10VG.30.E.V**	**938184Q**
Internormen	**Replaces 01.NL 100.25VG.30.E.V**	**938185Q**
Internormen	Replaces 01.NL 100.3VG.30.E.V	938182Q
Internormen	Replaces 01.NL 100.6VG.30.E.V	938183Q
Internormen	**Replaces 01.NL 63.10VG.30.E.V**	**938180Q**
Internormen	**Replaces 01.NL 63.25VG.30.E.V**	**938181Q**
Internormen	Replaces 01.NL 63.3VG.30.E.V	938178Q
Internormen	Replaces 01.NL 63.6VG.30.E.V	938179Q
Internormen	**Replaces 01.NL.40.10VG.HR.E.V**	**938248Q**
Internormen	**Replaces 01.NL.40.25VG.HR.E.V**	**938249Q**
Internormen	Replaces 01.NL.40.3VG.HR.E.V	938246Q
Internormen	Replaces 01.NL.40.6VG.HR.E.V	938247Q
Internormen	Replaces 01.E 120.25VG.16.S.V	939723Q
Internormen	Replaces 01.E 30.25VG.HR.E.V	939736Q
Internormen	Replaces 01.E 330.10VG.16.S.V	939727Q
Internormen	Replaces 01.E 41.10VG.16.S.V	939728Q
Internormen	Replaces 01.E 90.250G.HR.E.P.	939738Q
Internormen	Replaces 01.E 900.10VG.30.E.V	939734Q
Internormen	Replaces 01.E 950.10VG.10.S.V	939725Q
Internormen	Replaces 01.E 950.25P.10.S.V	939732Q
Internormen	Replaces 01.N 100.80G.16.E.V	939726Q
Internormen	Replaces 01.NL 40.25VG.30.E.V	939730Q
Internormen	Replaces 01.NL.630.25VG.30.S.V	939737Q
Internormen	Replaces 01.TS 210.25VG.B	939729Q
Mahle	**Replaces 852 126 Mic 10**	**PR4381Q**
Mahle	Replaces 852 127 Sm vst 3	937104Q
Mahle	**Replaces 852 127 SMX 10**	**937100Q**
Mahle	**Replaces 852 127 SMX 25**	**937101Q**
Mahle	Replaces 852 127 SMX 3	937102Q
Mahle	**Replaces 852 127 SMX VST 10**	**937103Q**
Mahle	Replaces 852 127 SMX VST 3	937099Q
Mahle	**Replaces 852 435 SM 10**	**PR4375Q**
Mahle	**Replaces 852 435 SM 25**	**PR4374Q**
Mahle	**Replaces 852 436 SM 10**	**PR4377Q**
Mahle	**Replaces 852 436 SM 25**	**PR4376Q**
Mahle	**Replaces 852 439 Sm 10**	**937105Q**
Mahle	**Replaces 852 519 Mic 10**	**937106Q**
Mahle	Replaces 852 519 Sm L	937107Q
Mahle	**Replaces 852 690 Sm 10**	**937108Q**
Mahle	**Replaces 852 760 Sm 10**	**937109Q**
Mahle	**Replaces 852 760 Sm 25**	**937110Q**
Mahle	Replaces 852 761 Mic 10	PR4378Q
Mahle	**Replaces 852 761 SM 10**	**PR4380Q**
Mahle	**Replaces 852 761 SM 25**	**PR4379Q**
Mahle	Replaces Pi1005Mic25	PR2829Q

Filter Element Competitor	Filter Element Competitor Part Number	Parker Part Number
Mahle	Replaces Pi1008Mic25	PR2837Q
Mahle	Replaces Pi1011Mic25	PR2845Q
Mahle	Replaces Pi1015Mic25	PR2853Q
Mahle	Replaces PI1030MIC25	PR2861Q
Mahle	Replaces Pi1045Mic25	PR2869Q
Mahle	Replaces Pi1105Mic10	PR2828Q
Mahle	Replaces Pi1108Mic10	PR2836Q
Mahle	Replaces Pi1111Mic10	PR2844Q
Mahle	Replaces Pi1115Mic10	PR2852Q
Mahle	Replaces Pi1130Mic10	PR2860Q
Mahle	Replaces Pi1145Mic10	PR2868Q
Mahle	**Replaces Pi21004DNSM-X3**	**PR4522Q**
Mahle	**Replaces Pi21006DNSM-X3**	**PR4526Q**
Mahle	**Replaces Pi21010DNSM-X3**	**PR4530Q**
Mahle	**Replaces Pi21016DNSM-X3**	**PR4534Q**
Mahle	**Replaces Pi21025DNSM-X3**	**PR4538Q**
Mahle	**Replaces Pi21040DNSM-X3**	**PR4542Q**
Mahle	Replaces Pi21040RNSM-X03	PR4508Q
Mahle	Replaces Pi2105 SMX 3	PR2830Q
Mahle	Replaces Pi21063RNSM-X03	PR4512Q
Mahle	**Replaces Pi2108SMX3**	**PR2838Q**
Mahle	Replaces Pi21100RNSM-X03	PR4516Q
Mahle	Replaces Pi2111SMX3	PR2846Q
Mahle	Replaces Pi2115SMX3	PR2854Q
Mahle	Replaces Pi2130SMX3	PR2862Q
Mahle	Replaces Pi2145SMX3	PR2870Q
Mahle	Replaces Pi22010RNSM-X06	PR4499Q
Mahle	Replaces Pi22016RNSM-X06	PR4502Q
Mahle	Replaces Pi22025RNSM-X06	PR4505Q
Mahle	**Replaces Pi22040RNSM-X06**	**PR4509Q**
Mahle	Replaces Pi2205SMXVST3	PR2833Q
Mahle	Replaces Pi22063RNSM-X06	PR4513Q
Mahle	**Replaces Pi2208SMXVST3**	**PR2841Q**
Mahle	Replaces Pi22100RNSM-X06	PR4517Q
Mahle	**Replaces Pi2211SMXVST3**	**PR2849Q**
Mahle	**Replaces Pi2215SMXVST3**	**PR2857Q**
Mahle	**Replaces Pi2230SMXVST3**	**PR2865Q**
Mahle	**Replaces Pi2245SMXVST3**	**PR2873Q**
Mahle	**Replaces Pi23004DNSM-X10**	**PR4523Q**
Mahle	**Replaces Pi23006DNSM-X10**	**PR4527Q**
Mahle	**Replaces Pi23010DNSM-X10**	**PR4531Q**
Mahle	**Replaces Pi23010RNSM-X10**	**PR4500Q**
Mahle	**Replaces Pi23016DNSM-X10**	**PR4535Q**
Mahle	**Replaces Pi23016RNSM-X10**	**PR4503Q**
Mahle	**Replaces Pi23025DNSM-X10**	**PR4539Q**
Mahle	**Replaces Pi23025RNSM-X10**	**PR4506Q**
Mahle	**Replaces Pi23040DNSM-X10**	**PR4543Q**
Mahle	**Replaces Pi23040RNSM-X10**	**PR4510Q**
Mahle	**Replaces Pi23063RNSM-X10**	**PR4514Q**
Mahle	**Replaces Pi23100RNSM-X10**	**PR4518Q**
Mahle	**Replaces Pi25010RNSM-X25**	**PR4501Q**
Mahle	**Replaces Pi25016RNSM-X25**	**PR4504Q**
Mahle	**Replaces Pi25025RNSM-X25**	**PR4507Q**
Mahle	**Replaces Pi25040RNSM-X25**	**PR4511Q**
Mahle	**Replaces Pi25063RNSM-X25**	**PR4515Q**
Mahle	**Replaces Pi25100RNSM-X25**	**PR4519Q**
Mahle	**Replaces Pi3105 SMX 10**	**PR2831Q**

PAR◇FIT™

Hydraulic and Lubrication Interchangeable Element Range



Part Numbers

Note: Bold and darker tint panel indicates the item is standard and available to order immediately.

Filter Element Competitor	Filter Element Competitor Part Number	Parker Part Number
Mahle	**Replaces Pi3108 SMX 10**	**PR2839Q**
Mahle	**Replaces Pi3111 SMX 10**	**PR2847Q**
Mahle	**Replaces Pi3115 SMX10**	**PR2855Q**
Mahle	**Replaces Pi3130 SMX10**	**PR2863Q**
Mahle	**Replaces Pi3145 SMX10**	**PR2871Q**
Mahle	**Replaces Pi3205 SMXVST10**	**PR2834Q**
Mahle	**Replaces Pi3208 SMXVST10**	**PR2842Q**
Mahle	**Replaces Pi3211 SMXVST10**	**PR2850Q**
Mahle	**Replaces Pi3215 SMXVST10**	**PR2858Q**
Mahle	**Replaces Pi3230 SMXVST10**	**PR2866Q**
Mahle	**Replaces Pi3245 SMXVST10**	**PR2874Q**
Mahle	**Replaces Pi4105 SMX25**	**PR2832Q**
Mahle	**Replaces Pi4108 SMX25**	**PR2840Q**
Mahle	**Replaces Pi4111 SMX25**	**PR2848Q**
Mahle	**Replaces Pi4115 SMX25**	**PR2856Q**
Mahle	**Replaces Pi4130 SMX25**	**PR2864Q**
Mahle	**Replaces Pi4145 SMX25**	**PR2872Q**
Mahle	**Replaces Pi4205 SMXVST25**	**PR2835Q**
Mahle	**Replaces Pi4208 SMXVST25**	**PR2843Q**
Mahle	**Replaces Pi4211 SMXVST25**	**PR2851Q**
Mahle	**Replaces Pi4215 SMXVST25**	**PR2859Q**
Mahle	**Replaces Pi4230 SMXVST25**	**PR2867Q**
Mahle	**Replaces Pi4245 SMXVST25**	**PR2875Q**
Mahle	**Replaces Pi71004DN SMXVST3**	**PR4520Q**
Mahle	**Replaces Pi71006DN SMXVST3**	**PR4524Q**
Mahle	**Replaces Pi71010DN SMXVST3**	**PR4528Q**
Mahle	**Replaces Pi71016DN SMXVST3**	**PR4532Q**
Mahle	**Replaces Pi71025DN SMXVST3**	**PR4536Q**
Mahle	**Replaces Pi71040DN SMXVST3**	**PR4540Q**
Mahle	**Replaces Pi73004DN SMXVST10**	**PR4521Q**
Mahle	**Replaces Pi73006DN SMXVST10**	**PR4525Q**
Mahle	**Replaces Pi73010DN SMXVST10**	**PR4529Q**
Mahle	**Replaces Pi73016DN SMXVST10**	**PR4533Q**
Mahle	**Replaces Pi73025DN SMXVST10**	**PR4537Q**
Mahle	**Replaces Pi73040DN SMXVST10**	**PR4541Q**
Mahle	Replaces 852 125 SMX 10	939735Q
MP Filtri	Replaces CSG-50-A10-A	928763
MP Filtri	Replaces CSG-50-A25-A	928764
MP Filtri	Replaces CU025A03VN	943793Q
MP Filtri	Replaces CU025A06VN	943794Q
MP Filtri	**Replaces CU025A10VN**	**943795Q**
MP Filtri	**Replaces CU025A25VN**	**943796Q**
MP Filtri	**Replaces CU025M25VN**	**943796Q**
MP Filtri	**Replaces CU025P10VN**	**943796Q**
MP Filtri	**Replaces CU025P25VN**	**943796Q**
MP Filtri	Replaces CU040A03VN	943797Q
MP Filtri	Replaces CU040A06VN	943798Q
MP Filtri	**Replaces CU040A10VN**	**943799Q**
MP Filtri	**Replaces CU040A25VN**	**943800Q**
MP Filtri	**Replaces CU040M25VN**	**943800Q**
MP Filtri	**Replaces CU040P10VN**	**943800Q**
MP Filtri	**Replaces CU040P25VN**	**943800Q**
MP Filtri	Replaces CU100A03VN	943801Q
MP Filtri	Replaces CU100A06VN	943802Q
MP Filtri	**Replaces CU100A10VN**	**943803Q**
MP Filtri	**Replaces CU100A25VN**	**943804Q**
MP Filtri	**Replaces CU100M25VN**	**943804Q**

Filter Element Competitor	Filter Element Competitor Part Number	Parker Part Number
MP Filtri	**Replaces CU100P10VN**	**943804Q**
MP Filtri	**Replaces CU100P25VN**	**943804Q**
MP Filtri	Replaces CU200A03VN	943805Q
MP Filtri	Replaces CU200A06VN	943806Q
MP Filtri	**Replaces CU200A10VN**	**943807Q**
MP Filtri	**Replaces CU200A25VN**	**943808Q**
MP Filtri	**Replaces CU200M25VN**	**943808Q**
MP Filtri	**Replaces CU200P10VN**	**943808Q**
MP Filtri	**Replaces CU200P25VN**	**943808Q**
MP Filtri	Replaces CU250A03VN	943809Q
MP Filtri	Replaces CU250A06VN	943810Q
MP Filtri	**Replaces CU250A10VN**	**943811Q**
MP Filtri	**Replaces CU250A25VN**	**943812Q**
MP Filtri	**Replaces CU250M25VN**	**943812Q**
MP Filtri	**Replaces CU250P10VN**	**943812Q**
MP Filtri	**Replaces CU250P25VN**	**943812Q**
MP Filtri	Replaces CU350A03VN	943813Q
MP Filtri	Replaces CU350A06VN	943814Q
MP Filtri	**Replaces CU350A10VN**	**943815Q**
MP Filtri	**Replaces CU350A25VN**	**943816Q**
MP Filtri	**Replaces CU350M25VN**	**943816Q**
MP Filtri	**Replaces CU350P10VN**	**943816Q**
MP Filtri	**Replaces CU350P25VN**	**943816Q**
MP Filtri	Replaces CU630A03VN	943817Q
MP Filtri	Replaces CU630A06VN	943818Q
MP Filtri	**Replaces CU630A10VN**	**943819Q**
MP Filtri	**Replaces CU630A25VN**	**943820Q**
MP Filtri	**Replaces CU630M25VN**	**943820Q**
MP Filtri	**Replaces CU630P10VN**	**943820Q**
MP Filtri	**Replaces CU630P25VN**	**943820Q**
MP Filtri	**Replaces CU730A03VN**	**943821Q**
MP Filtri	**Replaces CU730A06VN**	**943822Q**
MP Filtri	**Replaces CU730A10VN**	**943823Q**
MP Filtri	**Replaces CU730A25VN**	**943824Q**
MP Filtri	**Replaces CU730M25VN**	**943824Q**
MP Filtri	**Replaces CU730P10VN**	**943824Q**
MP Filtri	**Replaces CU730P25VN**	**943824Q**
MP Filtri	Replaces CU850A03VN	943825Q
MP Filtri	Replaces CU850A06VN	943826Q
MP Filtri	**Replaces CU850A10VN**	**943827Q**
MP Filtri	**Replaces CU850A25VN**	**943828Q**
MP Filtri	**Replaces CU850M25VN**	**943828Q**
MP Filtri	**Replaces CU850P10VN**	**943828Q**
MP Filtri	**Replaces CU850P25VN**	**943828Q**
MP Filtri	Replaces HP0371A03VN	938321Q
MP Filtri	Replaces HP0371A06VN	938322Q
MP Filtri	**Replaces HP0371A10VN**	**938323Q**
MP Filtri	**Replaces HP0371A25VN**	**938324Q**
MP Filtri	**Replaces HP0371M10VN**	**938324Q**
MP Filtri	**Replaces HP0371M25VN**	**938324Q**
MP Filtri	**Replaces HP0371P10VN**	**938324Q**
MP Filtri	**Replaces HP0371P25VN**	**938324Q**
MP Filtri	Replaces HP0372A03VN	938325Q
MP Filtri	Replaces HP0372A06VN	938326Q
MP Filtri	**Replaces HP0372A10VN**	**938327Q**
MP Filtri	**Replaces HP0372A25VN**	**938328Q**
MP Filtri	**Replaces HP0372M10VN**	**938328Q**

Tel: +45 63 12 83 00 | Email: ps@hymatik.com | www.hymatik.com | Hvidkaervej 27a, DK-5250 Odense SV, Denmark

PAR◇FIT™

Hydraulic and Lubrication Interchangeable Element Range

Part Numbers

Note: Bold and darker tint panel indicates the item is standard and available to order immediately.

Filter Element Competitor	Filter Element Competitor Part Number	Parker Part Number
MP Filtri	**Replaces HP0372M25VN**	**938328Q**
MP Filtri	**Replaces HP0372P10VN**	**938328Q**
MP Filtri	**Replaces HP0372P25VN**	**938328Q**
MP Filtri	Replaces HP0651A03VH	943613Q
MP Filtri	Replaces HP0651A03VN	938329Q
MP Filtri	Replaces HP0651A06VH	943614Q
MP Filtri	Replaces HP0651A06VN	938330Q
MP Filtri	**Replaces HP0651A10VH**	**943615Q**
MP Filtri	**Replaces HP0651A10VN**	**938331Q**
MP Filtri	**Replaces HP0651A25VH**	**943616Q**
MP Filtri	**Replaces HP0651A25VN**	**938332Q**
MP Filtri	**Replaces HP0651M10VH**	**943616Q**
MP Filtri	**Replaces HP0651M10VN**	**938332Q**
MP Filtri	**Replaces HP0651M25VH**	**943616Q**
MP Filtri	**Replaces HP0651M25VN**	**938332Q**
MP Filtri	**Replaces HP0651P10VN**	**938332Q**
MP Filtri	**Replaces HP0651P25VN**	**938332Q**
MP Filtri	Replaces HP0652A03VH	943617Q
MP Filtri	Replaces HP0652A03VN	938333Q
MP Filtri	Replaces HP0652A06VH	943618Q
MP Filtri	Replaces HP0652A06VN	938334Q
MP Filtri	**Replaces HP0652A10VH**	**943619Q**
MP Filtri	**Replaces HP0652A10VN**	**938335Q**
MP Filtri	**Replaces HP0652A25VH**	**943620Q**
MP Filtri	**Replaces HP0652A25VN**	**938336Q**
MP Filtri	**Replaces HP0652M10VH**	**943620Q**
MP Filtri	**Replaces HP0652M10VN**	**938336Q**
MP Filtri	**Replaces HP0652M25VH**	**943620Q**
MP Filtri	**Replaces HP0652M25VN**	**938336Q**
MP Filtri	**Replaces HP0652P10VN**	**938336Q**
MP Filtri	**Replaces HP0652P25VN**	**938336Q**
MP Filtri	Replaces HP0653A03VH	943621Q
MP Filtri	Replaces HP0653A03VN	938337Q
MP Filtri	Replaces HP0653A06VH	943622Q
MP Filtri	Replaces HP0653A06VN	938338Q
MP Filtri	**Replaces HP0653A10VH**	**943623Q**
MP Filtri	**Replaces HP0653A10VN**	**938339Q**
MP Filtri	**Replaces HP0653A25VH**	**943624Q**
MP Filtri	**Replaces HP0653A25VN**	**938340Q**
MP Filtri	**Replaces HP0653M10VH**	**943624Q**
MP Filtri	**Replaces HP0653M10VN**	**938340Q**
MP Filtri	**Replaces HP0653M25VH**	**943624Q**
MP Filtri	**Replaces HP0653M25VN**	**938340Q**
MP Filtri	**Replaces HP0653P10VN**	**938340Q**
MP Filtri	**Replaces HP0653P25VN**	**938340Q**
MP Filtri	Replaces HP1351A03VH	943625Q
MP Filtri	Replaces HP1351A03VN	938341Q
MP Filtri	Replaces HP1351A06VH	943626Q
MP Filtri	Replaces HP1351A06VN	938342Q
MP Filtri	**Replaces HP1351A10VH**	**943627Q**
MP Filtri	**Replaces HP1351A10VN**	**938343Q**
MP Filtri	**Replaces HP1351A25VH**	**943628Q**
MP Filtri	**Replaces HP1351A25VN**	**938344Q**
MP Filtri	**Replaces HP1351M10VH**	**943628Q**
MP Filtri	**Replaces HP1351M10VN**	**938344Q**
MP Filtri	**Replaces HP1351M25VH**	**943628Q**
MP Filtri	**Replaces HP1351M25VN**	**938344Q**

Filter Element Competitor	Filter Element Competitor Part Number	Parker Part Number
MP Filtri	**Replaces HP1351P10VN**	**938344Q**
MP Filtri	**Replaces HP1351P25VN**	**938344Q**
MP Filtri	Replaces HP1352A03VH	943629Q
MP Filtri	Replaces HP1352A03VN	938345Q
MP Filtri	Replaces HP1352A06VH	943630Q
MP Filtri	Replaces HP1352A06VN	938346Q
MP Filtri	**Replaces HP1352A10VH**	**943631Q**
MP Filtri	**Replaces HP1352A10VN**	**938347Q**
MP Filtri	**Replaces HP1352A25VH**	**943632Q**
MP Filtri	**Replaces HP1352A25VN**	**938348Q**
MP Filtri	**Replaces HP1352M10VH**	**943632Q**
MP Filtri	**Replaces HP1352M10VN**	**938348Q**
MP Filtri	**Replaces HP1352M25VH**	**943632Q**
MP Filtri	**Replaces HP1352M25VN**	**938348Q**
MP Filtri	**Replaces HP1352P10VN**	**938348Q**
MP Filtri	**Replaces HP1352P25VN**	**938348Q**
MP Filtri	Replaces HP1353A03VH	943633Q
MP Filtri	Replaces HP1353A03VN	938349Q
MP Filtri	Replaces HP1353A06VH	943634Q
MP Filtri	Replaces HP1353A06VN	938350Q
MP Filtri	**Replaces HP1353A10VH**	**943635Q**
MP Filtri	**Replaces HP1353A10VN**	**938351Q**
MP Filtri	**Replaces HP1353A25VH**	**943636Q**
MP Filtri	**Replaces HP1353A25VN**	**938352Q**
MP Filtri	**Replaces HP1353M10VH**	**943636Q**
MP Filtri	**Replaces HP1353M10VN**	**938352Q**
MP Filtri	**Replaces HP1353M25VH**	**943636Q**
MP Filtri	**Replaces HP1353M25VN**	**938352Q**
MP Filtri	**Replaces HP1353P10VN**	**938352Q**
MP Filtri	**Replaces HP1353P25VN**	**938352Q**
MP Filtri	Replaces HP3201A03VH	943637Q
MP Filtri	Replaces HP3201A03VN	938353Q
MP Filtri	Replaces HP3201A06VH	943638Q
MP Filtri	Replaces HP3201A06VN	938354Q
MP Filtri	**Replaces HP3201A10VH**	**943639Q**
MP Filtri	**Replaces HP3201A10VN**	**938355Q**
MP Filtri	**Replaces HP3201A25VH**	**943640Q**
MP Filtri	**Replaces HP3201A25VN**	**938356Q**
MP Filtri	**Replaces HP3201M10VH**	**943640Q**
MP Filtri	**Replaces HP3201M10VN**	**938356Q**
MP Filtri	**Replaces HP3201M25VH**	**943640Q**
MP Filtri	**Replaces HP3201M25VN**	**938356Q**
MP Filtri	**Replaces HP3201P10VN**	**938356Q**
MP Filtri	**Replaces HP3201P25VN**	**938356Q**
MP Filtri	Replaces HP3202A03VH	943641Q
MP Filtri	Replaces HP3202A03VN	938357Q
MP Filtri	Replaces HP3202A06VH	943642Q
MP Filtri	Replaces HP3202A06VN	938358Q
MP Filtri	**Replaces HP3202A10VH**	**943643Q**
MP Filtri	**Replaces HP3202A10VN**	**938359Q**
MP Filtri	**Replaces HP3202A25VH**	**943644Q**
MP Filtri	**Replaces HP3202A25VN**	**938360Q**
MP Filtri	**Replaces HP3202M10VH**	**943644Q**
MP Filtri	**Replaces HP3202M10VN**	**938360Q**
MP Filtri	**Replaces HP3202M25VH**	**943644Q**
MP Filtri	**Replaces HP3202M25VN**	**938360Q**
MP Filtri	**Replaces HP3202P10VN**	**938360Q**

PAR◇FIT™

Hydraulic and Lubrication Interchangeable Element Range



Part Numbers

Note: Bold and darker tint panel indicates the item is standard and available to order immediately.

Filter Element Competitor	Filter Element Competitor Part Number	Parker Part Number
MP Filtri	**Replaces HP3202P25VN**	**938360Q**
MP Filtri	Replaces HP3203A03VH	943645Q
MP Filtri	Replaces HP3203A03VN	943500Q
MP Filtri	Replaces HP3203A06VH	943646Q
MP Filtri	Replaces HP3203A06VN	943501Q
MP Filtri	**Replaces HP3203A10VH**	**943647Q**
MP Filtri	**Replaces HP3203A10VN**	**943502Q**
MP Filtri	**Replaces HP3203A25VH**	**943648Q**
MP Filtri	**Replaces HP3203A25VN**	**943503Q**
MP Filtri	**Replaces HP3203M10VH**	**943648Q**
MP Filtri	**Replaces HP3203M10VN**	**943503Q**
MP Filtri	**Replaces HP3203M25VH**	**943648Q**
MP Filtri	**Replaces HP3203M25VN**	**943503Q**
MP Filtri	**Replaces HP3203P10VN**	**943503Q**
MP Filtri	**Replaces HP3203P25VN**	**943503Q**
MP Filtri	Replaces HP3204A03VH	943649Q
MP Filtri	Replaces HP3204A03VN	943504Q
MP Filtri	Replaces HP3204A06VH	943650Q
MP Filtri	Replaces HP3204A06VN	943505Q
MP Filtri	**Replaces HP3204A10VH**	**943651Q**
MP Filtri	**Replaces HP3204A10VN**	**943506Q**
MP Filtri	**Replaces HP3204A25VH**	**943652Q**
MP Filtri	**Replaces HP3204A25VN**	**943507Q**
MP Filtri	**Replaces HP3204M10VH**	**943652Q**
MP Filtri	**Replaces HP3204M10VN**	**943507Q**
MP Filtri	**Replaces HP3204M25VH**	**943652Q**
MP Filtri	**Replaces HP3204M25VN**	**943507Q**
MP Filtri	**Replaces HP3204P10VN**	**943507Q**
MP Filtri	**Replaces HP3204P25VN**	**943507Q**
MP Filtri	Replaces HP5001A03VH	943653Q
MP Filtri	Replaces HP5001A03VN	943508Q
MP Filtri	Replaces HP5001A06VH	943654Q
MP Filtri	Replaces HP5001A06VN	943509Q
MP Filtri	**Replaces HP5001A10VH**	**943655Q**
MP Filtri	**Replaces HP5001A10VN**	**943510Q**
MP Filtri	**Replaces HP5001A25VH**	**943656Q**
MP Filtri	**Replaces HP5001A25VN**	**943511Q**
MP Filtri	**Replaces HP5001M10VH**	**943656Q**
MP Filtri	**Replaces HP5001M10VN**	**943511Q**
MP Filtri	**Replaces HP5001M25VH**	**943656Q**
MP Filtri	**Replaces HP5001M25VN**	**943511Q**
MP Filtri	**Replaces HP5001P10VN**	**943511Q**
MP Filtri	**Replaces HP5001P25VN**	**943511Q**
MP Filtri	Replaces HP5002A03VH	943657Q
MP Filtri	Replaces HP5002A03VN	943512Q
MP Filtri	Replaces HP5002A06VH	943658Q
MP Filtri	Replaces HP5002A06VN	943513Q
MP Filtri	**Replaces HP5002A10VH**	**943659Q**
MP Filtri	**Replaces HP5002A10VN**	**943514Q**
MP Filtri	**Replaces HP5002A25VH**	**943660Q**
MP Filtri	**Replaces HP5002A25VN**	**943515Q**
MP Filtri	**Replaces HP5002M10VH**	**943660Q**
MP Filtri	**Replaces HP5002M10VN**	**943515Q**
MP Filtri	**Replaces HP5002M25VH**	**943660Q**
MP Filtri	**Replaces HP5002M25VN**	**943515Q**
MP Filtri	**Replaces HP5002P10VN**	**943515Q**
MP Filtri	**Replaces HP5002P25VN**	**943515Q**

Filter Element Competitor	Filter Element Competitor Part Number	Parker Part Number
MP Filtri	**Replaces HP5003A03VH**	**943661Q**
MP Filtri	**Replaces HP5003A03VN**	**943516Q**
MP Filtri	**Replaces HP5003A06VH**	**943662Q**
MP Filtri	**Replaces HP5003A06VN**	**943517Q**
MP Filtri	**Replaces HP5003A10VH**	**943663Q**
MP Filtri	**Replaces HP5003A10VN**	**943518Q**
MP Filtri	**Replaces HP5003A25VH**	**943664Q**
MP Filtri	**Replaces HP5003A25VN**	**943519Q**
MP Filtri	**Replaces HP5003M10VH**	**943664Q**
MP Filtri	**Replaces HP5003M10VN**	**943519Q**
MP Filtri	**Replaces HP5003M25VH**	**943664Q**
MP Filtri	**Replaces HP5003M25VN**	**943519Q**
MP Filtri	**Replaces HP5003P10VN**	**943519Q**
MP Filtri	**Replaces HP5003P25VN**	**943519Q**
MP Filtri	Replaces HP5004A03VH	943665Q
MP Filtri	Replaces HP5004A03VN	943520Q
MP Filtri	Replaces HP5004A06VH	943666Q
MP Filtri	Replaces HP5004A06VN	943521Q
MP Filtri	**Replaces HP5004A10VH**	**943667Q**
MP Filtri	**Replaces HP5004A10VN**	**943522Q**
MP Filtri	**Replaces HP5004A25VH**	**943668Q**
MP Filtri	**Replaces HP5004A25VN**	**943523Q**
MP Filtri	**Replaces HP5004M10VH**	**943668Q**
MP Filtri	**Replaces HP5004M10VN**	**943523Q**
MP Filtri	**Replaces HP5004M25VH**	**943668Q**
MP Filtri	**Replaces HP5004M25VN**	**943523Q**
MP Filtri	**Replaces HP5004P10VN**	**943523Q**
MP Filtri	**Replaces HP5004P25VN**	**943523Q**
MP Filtri	Replaces HP5005A03VH	943669Q
MP Filtri	Replaces HP5005A03VN	943524Q
MP Filtri	Replaces HP5005A06VH	943670Q
MP Filtri	Replaces HP5005A06VN	943525Q
MP Filtri	**Replaces HP5005A10VH**	**943671Q**
MP Filtri	**Replaces HP5005A10VN**	**943526Q**
MP Filtri	**Replaces HP5005A25VH**	**943672Q**
MP Filtri	**Replaces HP5005A25VN**	**943527Q**
MP Filtri	**Replaces HP5005M10VH**	**943672Q**
MP Filtri	**Replaces HP5005M10VN**	**943527Q**
MP Filtri	**Replaces HP5005M25VH**	**943672Q**
MP Filtri	**Replaces HP5005M25VN**	**943527Q**
MP Filtri	**Replaces HP5005P10VN**	**943527Q**
MP Filtri	**Replaces HP5005P25VN**	**943527Q**
MP Filtri	Replaces MF0301A03VN	943703Q
MP Filtri	Replaces MF0301A06VN	943704Q
MP Filtri	**Replaces MF0301A10VN**	**943705Q**
MP Filtri	**Replaces MF0301A25VN**	**943706Q**
MP Filtri	**Replaces MF0301M25VN**	**943706Q**
MP Filtri	**Replaces MF0301P10VN**	**943706Q**
MP Filtri	**Replaces MF0301P25VN**	**943706Q**
MP Filtri	Replaces MF1001A03VN	943707Q
MP Filtri	Replaces MF1001A06VN	943708Q
MP Filtri	**Replaces MF1001A10VN**	**943709Q**
MP Filtri	**Replaces MF1001A25VN**	**943710Q**
MP Filtri	**Replaces MF1001M25VN**	**943710Q**
MP Filtri	**Replaces MF1001P10VN**	**943710Q**
MP Filtri	**Replaces MF1001P25VN**	**943710Q**
MP Filtri	Replaces MF1002A03VN	943711Q

Tel: +45 63 12 83 00 | Email: ps@hymatik.com | www.hymatik.com | Hvidkaervej 27a, DK-5250 Odense SV, Denmark

PAR◇FIT™

Hydraulic and Lubrication Interchangeable Element Range

Part Numbers

Note: Bold and darker tint panel indicates the item is standard and available to order immediately.

Filter Element Competitor	Filter Element Competitor Part Number	Parker Part Number
MP Filtri	Replaces MF1002A06VN	943712Q
MP Filtri	**Replaces MF1002A10VN**	**943713Q**
MP Filtri	**Replaces MF1002A25VN**	**943714Q**
MP Filtri	**Replaces MF1002M25VN**	**943714Q**
MP Filtri	**Replaces MF1002P10VN**	**943714Q**
MP Filtri	**Replaces MF1002P25VN**	**943714Q**
MP Filtri	Replaces MF1003A03VN	943715Q
MP Filtri	Replaces MF1003A06VN	943716Q
MP Filtri	**Replaces MF1003A10VN**	**943717Q**
MP Filtri	**Replaces MF1003A25VN**	**943718Q**
MP Filtri	**Replaces MF1003M25VN**	**943718Q**
MP Filtri	**Replaces MF1003P10VN**	**943718Q**
MP Filtri	**Replaces MF1003P25VN**	**943718Q**
MP Filtri	Replaces MF1801A03VN	943719Q
MP Filtri	Replaces MF1801A06VN	943720Q
MP Filtri	**Replaces MF1801A10VN**	**943721Q**
MP Filtri	**Replaces MF1801A25VN**	**943722Q**
MP Filtri	**Replaces MF1801M25VN**	**943722Q**
MP Filtri	**Replaces MF1801P10VN**	**943722Q**
MP Filtri	**Replaces MF1801P25VN**	**943722Q**
MP Filtri	Replaces MF1802A03VN	943723Q
MP Filtri	Replaces MF1802A06VN	943724Q
MP Filtri	**Replaces MF1802A10VN**	**943725Q**
MP Filtri	**Replaces MF1802A25VN**	**943726Q**
MP Filtri	**Replaces MF1802M25VN**	**943726Q**
MP Filtri	**Replaces MF1802P10VN**	**943726Q**
MP Filtri	**Replaces MF1802P25VN**	**943726Q**
MP Filtri	Replaces MF4001A03VN	943727Q
MP Filtri	Replaces MF4001A06VN	943728Q
MP Filtri	**Replaces MF4001A10VN**	**943729Q**
MP Filtri	**Replaces MF4001A25VN**	**943730Q**
MP Filtri	**Replaces MF4001M25VN**	**943730Q**
MP Filtri	**Replaces MF4001P10VN**	**943730Q**
MP Filtri	**Replaces MF4001P25VN**	**943730Q**
MP Filtri	Replaces MF4002A03VN	943731Q
MP Filtri	Replaces MF4002A06VN	943732Q
MP Filtri	**Replaces MF4002A10VN**	**943733Q**
MP Filtri	**Replaces MF4002A25VN**	**943734Q**
MP Filtri	**Replaces MF4002M25VN**	**943734Q**
MP Filtri	**Replaces MF4002P10VN**	**943734Q**
MP Filtri	**Replaces MF4002P25VN**	**943734Q**
MP Filtri	Replaces MF4003A03VN	943735Q
MP Filtri	Replaces MF4003A06VN	943736Q
MP Filtri	**Replaces MF4003A10VN**	**943737Q**
MP Filtri	**Replaces MF4003A25VN**	**943738Q**
MP Filtri	**Replaces MF4003M25VN**	**943738Q**
MP Filtri	**Replaces MF4003P10VN**	**943738Q**
MP Filtri	**Replaces MF4003P25VN**	**943738Q**
MP Filtri	Replaces MF7501A03VN	943739Q
MP Filtri	Replaces MF7501A06VN	943740Q
MP Filtri	**Replaces MF7501A10VN**	**943741Q**
MP Filtri	**Replaces MF7501A25VN**	**943742Q**
MP Filtri	**Replaces MF7501M25VN**	**943742Q**
MP Filtri	**Replaces MF7501P10VN**	**943742Q**
MP Filtri	**Replaces MF7501P25VN**	**943742Q**
MP Filtri	Replaces MR1001A03V	938318Q
MP Filtri	**Replaces MR1001A10V**	**938319Q**
MP Filtri	**Replaces MR1001A25V**	**938320Q**
MP Filtri	**Replaces MR1001M25V**	**938320Q**
MP Filtri	**Replaces MR1001P10V**	**938320Q**
MP Filtri	**Replaces MR1001P25V**	**938320Q**
MP Filtri	Replaces MR1002A03V	943879Q
MP Filtri	**Replaces MR1002A10V**	**943880Q**
MP Filtri	**Replaces MR1002A25V**	**943881Q**
MP Filtri	**Replaces MR1002M25V**	**943881Q**
MP Filtri	**Replaces MR1002P10V**	**943881Q**
MP Filtri	**Replaces MR1002P25V**	**943881Q**
MP Filtri	Replaces MR1003A03V	943887Q
MP Filtri	**Replaces MR1003A10V**	**943888Q**
MP Filtri	**Replaces MR1003A25V**	**943889Q**
MP Filtri	**Replaces MR1003M25V**	**943889Q**
MP Filtri	**Replaces MR1003P10V**	**943889Q**
MP Filtri	**Replaces MR1003P25V**	**943889Q**
MP Filtri	Replaces MR1004A03V	943895Q
MP Filtri	**Replaces MR1004A10V**	**943896Q**
MP Filtri	**Replaces MR1004A25V**	**943897Q**
MP Filtri	**Replaces MR1004M25V**	**943897Q**
MP Filtri	**Replaces MR1004P10V**	**943897Q**
MP Filtri	**Replaces MR1004P25V**	**943897Q**
MP Filtri	Replaces MR2501A03V	943903Q
MP Filtri	**Replaces MR2501A10V**	**943904Q**
MP Filtri	**Replaces MR2501A25V**	**943905Q**
MP Filtri	**Replaces MR2501M25V**	**943905Q**
MP Filtri	**Replaces MR2501P10V**	**943905Q**
MP Filtri	**Replaces MR2501P25V**	**943905Q**
MP Filtri	Replaces MR2502A03V	943911Q
MP Filtri	**Replaces MR2502A10V**	**943912Q**
MP Filtri	**Replaces MR2502A25V**	**943913Q**
MP Filtri	**Replaces MR2502M25V**	**943913Q**
MP Filtri	**Replaces MR2502P10V**	**943913Q**
MP Filtri	**Replaces MR2502P25V**	**943913Q**
MP Filtri	Replaces MR2503A03V	943919Q
MP Filtri	**Replaces MR2503A10V**	**943920Q**
MP Filtri	**Replaces MR2503A25V**	**943921Q**
MP Filtri	**Replaces MR2503M25V**	**943921Q**
MP Filtri	**Replaces MR2503P10V**	**943921Q**
MP Filtri	**Replaces MR2503P25V**	**943921Q**
MP Filtri	Replaces MR2504A03V	943927Q
MP Filtri	**Replaces MR2504A10V**	**943928Q**
MP Filtri	**Replaces MR2504A25V**	**943929Q**
MP Filtri	**Replaces MR2504M25V**	**943929Q**
MP Filtri	**Replaces MR2504P10V**	**943929Q**
MP Filtri	**Replaces MR2504P25V**	**943929Q**
MP Filtri	Replaces MR6301A03V	943935Q
MP Filtri	**Replaces MR6301A10V**	**943936Q**
MP Filtri	**Replaces MR6301A25V**	**943937Q**
MP Filtri	**Replaces MR6301M25V**	**943937Q**
MP Filtri	**Replaces MR6301P10V**	**943937Q**
MP Filtri	**Replaces MR6301P25V**	**943937Q**
MP Filtri	Replaces MR6302A03V	943943Q
MP Filtri	**Replaces MR6302A10V**	**943944Q**
MP Filtri	**Replaces MR6302A25V**	**943945Q**
MP Filtri	**Replaces MR6302M25V**	**943945Q**
MP Filtri	**Replaces MR6302P10V**	**943945Q**

Tel: +45 63 12 83 00 | Email: ps@hymatik.com | www.hymatik.com | Hvidkaervej 27a, DK-5250 Odense SV, Denmark

PAR◇FIT™

Hydraulic and Lubrication Interchangeable Element Range



Part Numbers

Note: Bold and darker tint panel indicates the item is standard and available to order immediately.

Filter Element Competitor	Filter Element Competitor Part Number	Parker Part Number
MP Filtri	**Replaces MR6302P25V**	**943945Q**
MP Filtri	Replaces MR6303A03V	943951Q
MP Filtri	**Replaces MR6303A10V**	**943952Q**
MP Filtri	**Replaces MR6303A25V**	**943953Q**
MP Filtri	**Replaces MR6303M25V**	**943953Q**
MP Filtri	**Replaces MR6303P10V**	**943953Q**
MP Filtri	**Replaces MR6303P25V**	**943953Q**
MP Filtri	Replaces MR6304A03V	943959Q
MP Filtri	**Replaces MR6304A10V**	**943960Q**
MP Filtri	**Replaces MR6304A25V**	**943961Q**
MP Filtri	**Replaces MR6304M25V**	**943961Q**
MP Filtri	**Replaces MR6304P10V**	**943961Q**
MP Filtri	**Replaces MR6304P25V**	**943961Q**
MP Filtri	Replaces MR8501A03V	943967Q
MP Filtri	**Replaces MR8501A10V**	**943968Q**
MP Filtri	**Replaces MR8501A25V**	**943969Q**
MP Filtri	**Replaces MR8501M25V**	**943969Q**
MP Filtri	**Replaces MR8501P10V**	**943969Q**
MP Filtri	**Replaces MR8501P25V**	**943969Q**
MP Filtri	Replaces MR8502A03V	943975Q
MP Filtri	**Replaces MR8502A10V**	**943976Q**
MP Filtri	**Replaces MR8502A25V**	**943977Q**
MP Filtri	**Replaces MR8502M25V**	**943977Q**
MP Filtri	**Replaces MR8502P10V**	**943977Q**
MP Filtri	**Replaces MR8502P25V**	**943977Q**
MP Filtri	Replaces MR8503A03V	943983Q
MP Filtri	**Replaces MR8503A10V**	**943984Q**
MP Filtri	**Replaces MR8503A25V**	**943985Q**
MP Filtri	**Replaces MR8503M25V**	**943985Q**
MP Filtri	**Replaces MR8503P10V**	**943985Q**
MP Filtri	**Replaces MR8503P25V**	**943985Q**
MP Filtri	Replaces MR8504A03V	943991Q
MP Filtri	**Replaces MR8504A10V**	**943992Q**
MP Filtri	**Replaces MR8504A25V**	**943993Q**
MP Filtri	**Replaces MR8504M25V**	**943993Q**
MP Filtri	**Replaces MR8504P10V**	**943993Q**
MP Filtri	**Replaces MR8504P25V**	**943993Q**
Norman Ultraporous	Replaces U-1005	MX.1518.4.10X4
Palfinger	Replaces EA1673	939724Q
Palfinger	Replaces EA2169	938309Q
Pall	Replaces HC0728FKN26H	938147Q
Pall	Replaces HC0728FKN39H	938151Q
Pall	Replaces HC0728FKP26H	938146Q
Pall	Replaces HC0728FKP39H	938150Q
Pall	Replaces HC0728FKS26H	938148Q
Pall	Replaces HC0728FKS39H	938152Q
Pall	Replaces HC0728FKT26H	938149Q
Pall	Replaces HC0728FKT39H	938153Q
Pall	Replaces HC2253FKN16H	932641Q
Pall	Replaces HC2253FKP16H	932640Q
Pall	Replaces HC2253FKS16H	932642Q
Pall	Replaces HC2254FKP16H	932643Q
Pall	Replaces HC2254FKP8H	932637Q
Pall	Replaces HC2254FKT16H	932645Q
Pall	Replaces HC2254FKT8H	932639Q
Pall	Replaces HC2618FKN18H	933912Q
Pall	Replaces HC2618FKN36H	933919Q

Filter Element Competitor	Filter Element Competitor Part Number	Parker Part Number
Pall	Replaces HC2618FKP18H	934179Q
Pall	Replaces HC2618FKP36H	934180Q
Pall	Replaces HC2618FKS18H	933913Q
Pall	Replaces HC2618FKS36H	933920Q
Pall	Replaces HC2618FKT18H	933914Q
Pall	Replaces HC2618FKT36H	933921Q
Pall	Replaces HC6200FKN8H	938159Q
Pall	Replaces HC6200FKP8H	938158Q
Pall	Replaces HC6200FKS8H	938160Q
Pall	Replaces HC6200FKT8H	938161Q
Pall	Replaces HC6300FKN13H	937112Q
Pall	Replaces HC6300FKN16H	937113Q
Pall	Replaces HC6300FKN26H	937114Q
Pall	Replaces HC6300FKN8H	937115Q
Pall	Replaces HC6300FKP13H	937116Q
Pall	Replaces HC6300FKP16H	937117Q
Pall	Replaces HC6300FKP26H	937118Q
Pall	Replaces HC6300FKP8H	937122Q
Pall	**Replaces HC6300FKS13H**	**937123Q**
Pall	**Replaces HC6300FKS16H**	**937124Q**
Pall	**Replaces HC6300FKS26H**	**937125Q**
Pall	**Replaces HC6300FKS8H**	**937126Q**
Pall	**Replaces HC6300FKT13H**	**937127Q**
Pall	**Replaces HC6300FKT16H**	**937128Q**
Pall	**Replaces HC6300FKT26H**	**937129Q**
Pall	**Replaces HC6300FKT8H**	**937130Q**
Pall	Replaces HC6400FKN13H	935140
Pall	Replaces HC6400FKN16H	935144
Pall	Replaces HC6400FKN26H	935148
Pall	Replaces HC6400FKN8H	937134Q
Pall	Replaces HC6400FKP13H	935139
Pall	Replaces HC6400FKP16H	935143
Pall	Replaces HC6400FKP26H	935147
Pall	Replaces HC6400FKP8H	937138Q
Pall	**Replaces HC6400FKS13H**	**935141**
Pall	**Replaces HC6400FKS16H**	**935145**
Pall	**Replaces HC6400FKS26H**	**935149**
Pall	**Replaces HC6400FKS8H**	**937142Q**
Pall	**Replaces HC6400FKT13H**	**935142**
Pall	**Replaces HC6400FKT16H**	**935146**
Pall	**Replaces HC6400FKT26H**	**935150**
Pall	**Replaces HC6400FKT8H**	**937146Q**
Pall	Replaces HC6500FKN13H	935152
Pall	Replaces HC6500FKN16H	935156
Pall	Replaces HC6500FKN26H	935160
Pall	Replaces HC6500FKN8H	PR4346Q
Pall	Replaces HC6500FKP13H	935151
Pall	Replaces HC6500FKP16H	935155
Pall	Replaces HC6500FKP26H	935159
Pall	Replaces HC6500FKP8H	PR4347Q
Pall	**Replaces HC6500FKS13H**	**935153**
Pall	**Replaces HC6500FKS16H**	**935157**
Pall	**Replaces HC6500FKS26H**	**935161**
Pall	**Replaces HC6500FKS8H**	**PR4345Q**
Pall	**Replaces HC6500FKT13H**	**935154**
Pall	**Replaces HC6500FKT16H**	**935158**
Pall	**Replaces HC6500FKT26H**	**935162**

PAR◇FIT™

Hydraulic and Lubrication Interchangeable Element Range

Part Numbers

Note: Bold and darker tint panel indicates the item is standard and available to order immediately.

Filter Element Competitor	Filter Element Competitor Part Number	Parker Part Number
Pall	**Replaces HC6500FKT8H**	**PR4344Q**
Pall	Replaces HC7400SKN4H	935164
Pall	Replaces HC7400SKN8H	935168
Pall	Replaces HC7400SKP4H	935163
Pall	Replaces HC7400SKP8H	935167
Pall	Replaces HC7400SKS4H	935165
Pall	Replaces HC7400SKS8H	935169
Pall	Replaces HC7400SKT4H	935166
Pall	Replaces HC7400SKT8H	935170
Pall	Replaces HC7500SKJ4H	937151Q
Pall	Replaces HC7500SKN4H	928766
Pall	Replaces HC7500SKN8H	932073
Pall	Replaces HC7500SKP4H	934200
Pall	Replaces HC7500SKS8H	929445
Pall	Replaces HC7500SKT4H	928767
Pall	Replaces HC7500SKT8H	929446
Pall	Replaces HC8200FKN13H	934472Q
Pall	Replaces HC8200FKN16H	935549Q
Pall	Replaces HC8200FKN8H	932266Q
Pall	Replaces HC8200FKP13H	934473Q
Pall	Replaces HC8200FKP16H	935548Q
Pall	Replaces HC8200FKP8H	933363Q
Pall	**Replaces HC8200FKS13H**	**934474Q**
Pall	**Replaces HC8200FKS16H**	**935550Q**
Pall	**Replaces HC8200FKS8H**	**933364Q**
Pall	**Replaces HC8200FKT13H**	**934475Q**
Pall	**Replaces HC8200FKT16H**	**935551Q**
Pall	**Replaces HC8200FKT8H**	**933365Q**
Pall	**Replaces HC8300FKN16H**	**PR2798Q**
Pall	Replaces HC8300FKN21H	937153Q
Pall	**Replaces HC8300FKN39H**	**932873Q**
Pall	**Replaces HC8300FKN8H**	**927861Q**
Pall	**Replaces HC8300FKP16H**	**PR3455Q**
Pall	**Replaces HC8300FKP39H**	**932872Q**
Pall	**Replaces HC8300FKP8H**	**927663Q**
Pall	**Replaces HC8300FKS16H**	**PR3456Q**
Pall	**Replaces HC8300FKS21H**	**937155Q**
Pall	**Replaces HC8300FKS26H**	**937156Q**
Pall	**Replaces HC8300FKS39H**	**932874Q**
Pall	**Replaces HC8300FKS8H**	**927661Q**
Pall	**Replaces HC8300FKT16H**	**933047Q**
Pall	**Replaces HC8300FKT21H**	**937157Q**
Pall	**Replaces HC8300FKT26H**	**937158Q**
Pall	**Replaces HC8300FKT39H**	**932875Q**
Pall	**Replaces HC8300FKT8H**	**929099Q**
Pall	Replaces HC8300FKZ16H	937159Q
Pall	Replaces HC8300FKZ39H	937160Q
Pall	Replaces HC8300FKZ8H	937161Q
Pall	Replaces HC8300FWT16H	937162Q
Pall	Replaces HC8300FWT39H	937163Q
Pall	Replaces HC8300FWT8H	937164Q
Pall	Replaces HC8304FKN16H	937165Q
Pall	Replaces HC8304FKN39H	937166Q
Pall	Replaces HC8304FKP16H	937167Q
Pall	Replaces HC8304FKP39H	937168Q
Pall	**Replaces HC8304FKS16H**	**937169Q**
Pall	**Replaces HC8304FKS39H**	**937170Q**

Filter Element Competitor	Filter Element Competitor Part Number	Parker Part Number
Pall	**Replaces HC8304FKT16H**	**937171Q**
Pall	**Replaces HC8304FKT39H**	**937172Q**
Pall	Replaces HC8314FKN16H	934309Q
Pall	Replaces HC8314FKN39H	934122Q
Pall	Replaces HC8314FKP16H	934308Q
Pall	Replaces HC8314FKP39H	934121Q
Pall	**Replaces HC8314FKS16H**	**934310Q**
Pall	**Replaces HC8314FKS39H**	**934123Q**
Pall	**Replaces HC8314FKT16H**	**934311Q**
Pall	**Replaces HC8314FKT39H**	**934124Q**
Pall	Replaces HC8400FKN16H	933759Q
Pall	Replaces HC8400FKN26H	933227Q
Pall	Replaces HC8400FKN39H	933090Q
Pall	Replaces HC8400FKN8H	933758Q
Pall	Replaces HC8400FKP16H	933776Q
Pall	Replaces HC8400FKP26H	933226Q
Pall	Replaces HC8400FKP39H	933089Q
Pall	Replaces HC8400FKP8H	933773Q
Pall	**Replaces HC8400FKS16H**	**933777Q**
Pall	**Replaces HC8400FKS26H**	**933228Q**
Pall	**Replaces HC8400FKS39H**	**933091Q**
Pall	**Replaces HC8400FKS8H**	**933774Q**
Pall	**Replaces HC8400FKT16H**	**933763Q**
Pall	**Replaces HC8400FKT26H**	**933229Q**
Pall	**Replaces HC8400FKT39H**	**933092Q**
Pall	**Replaces HC8400FKT8H**	**933775Q**
Pall	Replaces HC8500FKN13H	935176
Pall	Replaces HC8500FKN26H	935180
Pall	Replaces HC8500FKN8H	935172
Pall	Replaces HC8500FKP13H	935175
Pall	Replaces HC8500FKP26H	935179
Pall	Replaces HC8500FKP8H	935171
Pall	**Replaces HC8500FKS13H**	**935177**
Pall	**Replaces HC8500FKS26H**	**935181**
Pall	**Replaces HC8500FKS8H**	**935173**
Pall	**Replaces HC8500FKT13H**	**935178**
Pall	**Replaces HC8500FKT26H**	**935182**
Pall	**Replaces HC8500FKT8H**	**935174**
Pall	Replaces HC8700FKN4H	PR4454Q
Pall	Replaces HC8700FKN8H	PR4458Q
Pall	Replaces HC8700FKP4H	PR4453Q
Pall	Replaces HC8700FKP8H	PR4457Q
Pall	**Replaces HC8700FKS4H**	**PR4455Q**
Pall	**Replaces HC8700FKS8H**	**PR4459Q**
Pall	**Replaces HC8700FKT4H**	**PR4456Q**
Pall	**Replaces HC8700FKT8H**	**PR4460Q**
Pall	Replaces HC8800FKN13H	933378Q
Pall	Replaces HC8800FKN16H	933234Q
Pall	Replaces HC8800FKN8H	933377Q
Pall	Replaces HC8800FKP13H	930222Q
Pall	Replaces HC8800FKP16H	930226Q
Pall	Replaces HC8800FKP8H	930218Q
Pall	**Replaces HC8800FKS13H**	**930223Q**
Pall	**Replaces HC8800FKS16H**	**930227Q**
Pall	**Replaces HC8800FKS8H**	**930219Q**
Pall	**Replaces HC8800FKT13H**	**930224Q**
Pall	**Replaces HC8800FKT16H**	**930228Q**

PAR◇FIT™

Hydraulic and Lubrication Interchangeable Element Range



Part Numbers

Note: Bold and darker tint panel indicates the item is standard and available to order immediately.

Filter Element Competitor	Filter Element Competitor Part Number	Parker Part Number
Pall	**Replaces HC8800FKT8H**	**930220Q**
Pall	**Replaces HC8900FKN13H**	**933203Q**
Pall	**Replaces HC8900FKN16H**	**933211Q**
Pall	**Replaces HC8900FKN26H**	**933219Q**
Pall	**Replaces HC8900FKN39H**	**937180Q**
Pall	**Replaces HC8900FKN8H**	**933194Q**
Pall	**Replaces HC8900FKP13H**	**933202Q**
Pall	**Replaces HC8900FKP16H**	**933210Q**
Pall	**Replaces HC8900FKP26H**	**933218Q**
Pall	**Replaces HC8900FKP39H**	**937181Q**
Pall	**Replaces HC8900FKP8H**	**933193Q**
Pall	**Replaces HC8900FKS13H**	**933204Q**
Pall	**Replaces HC8900FKS16H**	**933212Q**
Pall	**Replaces HC8900FKS26H**	**933220Q**
Pall	**Replaces HC8900FKS39H**	**937182Q**
Pall	**Replaces HC8900FKS8H**	**933195Q**
Pall	**Replaces HC8900FKT13H**	**933205Q**
Pall	**Replaces HC8900FKT16H**	**933213Q**
Pall	**Replaces HC8900FKT26H**	**933221Q**
Pall	**Replaces HC8900FKT39H**	**937183Q**
Pall	**Replaces HC8900FKT8H**	**933196Q**
Pall	Replaces HC8904FKN13H	944067Q
Pall	Replaces HC8904FKN26H	944071Q
Pall	**Replaces HC8904FKN39H**	**938315Q**
Pall	Replaces HC8904FKN8H	944063Q
Pall	Replaces HC8904FKP13H	944066Q
Pall	Replaces HC8904FKP26H	944070Q
Pall	**Replaces HC8904FKP39H**	**938314Q**
Pall	Replaces HC8904FKP8H	944062Q
Pall	Replaces HC8904FKS13H	944068Q
Pall	Replaces HC8904FKS26H	944072Q
Pall	**Replaces HC8904FKS39H**	**938316Q**
Pall	Replaces HC8904FKS8H	944064Q
Pall	Replaces HC8904FKT13H	944069Q
Pall	Replaces HC8904FKT26H	944073Q
Pall	**Replaces HC8904FKT39H**	**938317Q**
Pall	Replaces HC8904FKT8H	944065Q
Pall	**Replaces HC9020FKN4H**	**933239Q**
Pall	**Replaces HC9020FKN8H**	**933246Q**
Pall	**Replaces HC9020FKP4H**	**925582Q**
Pall	**Replaces HC9020FKP8H**	**925602Q**
Pall	**Replaces HC9020FKS4H**	**925580Q**
Pall	**Replaces HC9020FKS8H**	**925600Q**
Pall	**Replaces HC9020FKT4H**	**PR3444Q**
Pall	**Replaces HC9020FKT8H**	**PR3446Q**
Pall	Replaces HC9020FKZ4H	937184Q
Pall	**Replaces HC9021FKP4H**	**927725Q**
Pall	**Replaces HC9021FKP8H**	**927723Q**
Pall	**Replaces HC9021FKS4H**	**927696Q**
Pall	**Replaces HC9021FKT4H**	**928642Q**
Pall	**Replaces HC9021FKT8H**	**928643Q**
Pall	Replaces HC9100FKN8H	938163Q
Pall	Replaces HC9100FKP8H	938162Q
Pall	Replaces HC9100FKS8H	938164Q
Pall	Replaces HC9100FKT8H	938165Q
Pall	Replaces HC9300FKN8H	935184
Pall	Replaces HC9300FKP8H	935183

Filter Element Competitor	Filter Element Competitor Part Number	Parker Part Number
Pall	Replaces HC9300FKS8H	935185
Pall	Replaces HC9300FKT8H	935186
Pall	Replaces HC9400FKN13H	929886Q
Pall	Replaces HC9400FKN26H	929892Q
Pall	Replaces HC9400FKN39H	933264Q
Pall	Replaces HC9400FKP13H	929884Q
Pall	Replaces HC9400FKP26H	929890Q
Pall	Replaces HC9400FKP39H	933263Q
Pall	**Replaces HC9400FKS13H**	**929885Q**
Pall	**Replaces HC9400FKS26H**	**929891Q**
Pall	**Replaces HC9400FKS39H**	**933265Q**
Pall	**Replaces HC9400FKT13H**	**933253Q**
Pall	**Replaces HC9400FKT26H**	**933258Q**
Pall	**Replaces HC9400FKT39H**	**933266Q**
Pall	**Replaces HC9600FKN13H**	**926845Q**
Pall	**Replaces HC9600FKN16H**	**926890Q**
Pall	**Replaces HC9600FKN4H**	**926841Q**
Pall	**Replaces HC9600FKN8H**	**926843Q**
Pall	**Replaces HC9600FKP13H**	**926698Q**
Pall	**Replaces HC9600FKP16H**	**926699Q**
Pall	**Replaces HC9600FKP4H**	**PR3435Q**
Pall	**Replaces HC9600FKP8H**	**PR3436Q**
Pall	**Replaces HC9600FKS13H**	**926839Q**
Pall	**Replaces HC9600FKS16H**	**926888Q**
Pall	**Replaces HC9600FKS4H**	**PR3437Q**
Pall	**Replaces HC9600FKS8H**	**PR3438Q**
Pall	**Replaces HC9600FKT13H**	**930162Q**
Pall	**Replaces HC9600FKT16H**	**930164Q**
Pall	**Replaces HC9600FKT4H**	**PR3440Q**
Pall	**Replaces HC9600FKT8H**	**PR3441Q**
Pall	Replaces HC9600FWT13H	937186Q
Pall	**Replaces HC9601FKN8H**	**934194Q**
Pall	**Replaces HC9601FKP13H**	**927182Q**
Pall	**Replaces HC9601FKP16H**	**928143Q**
Pall	**Replaces HC9601FKP4H**	**927170Q**
Pall	**Replaces HC9601FKP8H**	**927176Q**
Pall	**Replaces HC9601FKS13H**	**937187Q**
Pall	**Replaces HC9601FKS16H**	**937188Q**
Pall	**Replaces HC9601FKS4H**	**937189Q**
Pall	**Replaces HC9601FKS8H**	**937190Q**
Pall	**Replaces HC9601FKT13H**	**927181Q**
Pall	**Replaces HC9601FKT16H**	**928142Q**
Pall	**Replaces HC9601FKT4H**	**927169Q**
Pall	**Replaces HC9601FKT8H**	**927175Q**
Pall	Replaces HC9604FKN13H	937191Q
Pall	Replaces HC9604FKN16H	937192Q
Pall	Replaces HC9604FKN4H	937193Q
Pall	Replaces HC9604FKN8H	937194Q
Pall	Replaces HC9604FKP13H	937197Q
Pall	Replaces HC9604FKP16H	937198Q
Pall	Replaces HC9604FKP4H	937199Q
Pall	**Replaces HC9604FKP8H**	**937200Q**
Pall	**Replaces HC9604FKS13H**	**937201Q**
Pall	**Replaces HC9604FKS16H**	**937202Q**
Pall	**Replaces HC9604FKS4H**	**937203Q**
Pall	**Replaces HC9604FKS8H**	**937204Q**
Pall	**Replaces HC9604FKT13H**	**937205Q**

PAR◇FIT™

Hydraulic and Lubrication Interchangeable Element Range

Part Numbers

Note: Bold and darker tint panel indicates the item is standard and available to order immediately.

Filter Element Competitor	Filter Element Competitor Part Number	Parker Part Number
Pall	**Replaces HC9604FKT16H**	**937206Q**
Pall	**Replaces HC9604FKT4H**	**937207Q**
Pall	**Replaces HC9604FKT8H**	**937208Q**
Pall	**Replaces HC9650FKN13H**	**937209Q**
Pall	**Replaces HC9650FKN16H**	**926994Q**
Pall	Replaces HC9650FKN4H	937210Q
Pall	**Replaces HC9650FKN8H**	**926988Q**
Pall	Replaces HC9650FKP13H	937211Q
Pall	**Replaces HC9650FKP16H**	**926998Q**
Pall	Replaces HC9650FKP4H	937212Q
Pall	**Replaces HC9650FKP8H**	**926992Q**
Pall	**Replaces HC9650FKS13H**	**937213Q**
Pall	**Replaces HC9650FKS16H**	**926996Q**
Pall	**Replaces HC9650FKS4H**	**937214Q**
Pall	**Replaces HC9650FKS8H**	**926990Q**
Pall	**Replaces HC9650FKT13H**	**937215Q**
Pall	**Replaces HC9650FKT16H**	**933302Q**
Pall	**Replaces HC9650FKT4H**	**937216Q**
Pall	**Replaces HC9650FKT8H**	**933295Q**
Pall	Replaces HC9651FKN16H	937217Q
Pall	Replaces HC9651FKN8H	937218Q
Pall	**Replaces HC9651FKP16H**	**928156Q**
Pall	**Replaces HC9651FKP8H**	**928152Q**
Pall	**Replaces HC9651FKS16H**	**937219Q**
Pall	**Replaces HC9651FKS8H**	**937220Q**
Pall	**Replaces HC9651FKT16H**	**928154Q**
Pall	**Replaces HC9651FKT8H**	**928150Q**
Pall	Replaces HC9700FKN18H	932678Q
Pall	Replaces HC9700FKN27H	933487Q
Pall	Replaces HC9700FKN9H	932669Q
Pall	Replaces HC9700FKN9H	HF41L5VQ
Pall	Replaces HC9700FKP18H	932677Q
Pall	Replaces HC9700FKP27H	933486Q
Pall	Replaces HC9700FKP9H	932668Q
Pall	Replaces HC9700FKP9H	HF41L3VQ
Pall	**Replaces HC9700FKS18H**	**932679Q**
Pall	**Replaces HC9700FKS27H**	**933488Q**
Pall	**Replaces HC9700FKS9H**	**932670Q**
Pall	Replaces HC9700FKS9H	HF41L10VQ
Pall	**Replaces HC9700FKT18H**	**931020Q**
Pall	**Replaces HC9700FKT27H**	**933489Q**
Pall	**Replaces HC9700FKT9H**	**931018Q**
Pall	Replaces HC9700FKT9H	HF41L20VQ
Pall	**Replaces HC9800FKN13H**	**933784Q**
Pall	**Replaces HC9800FKN4H**	**930197Q**
Pall	**Replaces HC9800FKN8H**	**930198Q**
Pall	**Replaces HC9800FKP13H**	**933782Q**
Pall	**Replaces HC9800FKP4H**	**930189Q**
Pall	**Replaces HC9800FKP8H**	**930192Q**
Pall	**Replaces HC9800FKS13H**	**933786Q**
Pall	**Replaces HC9800FKS4H**	**930190Q**
Pall	**Replaces HC9800FKS8H**	**930193Q**
Pall	**Replaces HC9800FKT13H**	**933788Q**
Pall	**Replaces HC9800FKT4H**	**930191Q**
Pall	**Replaces HC9800FKT8H**	**930194Q**
Pall	**Replaces HC9801FKP13H**	**PR2759Q**
Pall	**Replaces HC9801FKP4H**	**935191Q**

Filter Element Competitor	Filter Element Competitor Part Number	Parker Part Number
Pall	**Replaces HC9801FKP8H**	**935193Q**
Pall	Replaces HC9801FKP8Z	935193
Pall	**Replaces HC9801FKS13H**	**937221Q**
Pall	**Replaces HC9801FKS4H**	**937222Q**
Pall	**Replaces HC9801FKS8H**	**937223Q**
Pall	**Replaces HC9801FKT13H**	**PR2760Q**
Pall	**Replaces HC9801FKT4H**	**935192Q**
Pall	**Replaces HC9801FKT8H**	**935194Q**
Pall	**Replaces HC9801FKT8Z**	**935194**
Pall	Replaces HC9901FKP13H	935195
Pall	Replaces HC9901FKP26H	935197
Pall	Replaces HC9901FKP39H	935199
Pall	**Replaces HC9901FKT13H**	**935196**
Pall	**Replaces HC9901FKT26H**	**935198**
Pall	**Replaces HC9901FKT39H**	**935200**
Pall	Replaces WR8900FON26H	939300Q
Pall	Replaces HC9100FKN13H	944094Q
Pall	Replaces HC9100FKP13H	944093Q
Pall	Replaces HC9100FKS13H	944095Q
Pall	Replaces HC9100FKT13H	944096Q
Pall	Replaces HC9101FKN8H	944087Q
Pall	Replaces HC9101FKP8H	944086Q
Pall	Replaces HC9101FKS8H	944088Q
Pall	Replaces HC9101FKT8H	944089Q
PTI	Replaces F4E-030-BC-B	926543
PTI	Replaces F4E-050-CC-B	926169
PTI	Replaces F4E-051-CC-B	927147
PTI	Replaces F4E-051-DC-B	927148
PTI	Replaces P83-100-EF-B	929103
PTI	Replaces P83-150-EF-B	929109
PTI	Replaces P83-250-EF-B	932006
PTI	Replaces PG-015-GH	935217
PTI	Replaces PG-015-GU	935220
PTI	Replaces PG-015-HH	935218
PTI	Replaces PG-015-HU	935221
PTI	Replaces PG-015-JH	935219
PTI	Replaces PG-015-JU	935222
PTI	Replaces PG-025-GH	935223
PTI	Replaces PG-025-GU	935226
PTI	Replaces PG-025-HH	935224
PTI	Replaces PG-025-HU	935227
PTI	Replaces PG-025-JH	935225
PTI	Replaces PG-025-JU	935228
PTI	Replaces PG-030-GH	935229
PTI	Replaces PG-030-GU	935232
PTI	Replaces PG-030-HH	935230
PTI	Replaces PG-030-HU	935233
PTI	Replaces PG-030-JH	935231
PTI	Replaces PG-030-JU	935234
PTI	Replaces PG-050-GH	935235
PTI	Replaces PG-050-GU	935238
PTI	Replaces PG-050-HH	935236
PTI	Replaces PG-050-HU	935239
PTI	Replaces PG-050-JH	935237
PTI	Replaces PG-050-JU	935240
PTI	Replaces PG-080-GH	935241
PTI	Replaces PG-080-GU	935244

Tel: +45 63 12 83 00 | Email: ps@hymatik.com | www.hymatik.com | Hvidkaervej 27a, DK-5250 Odense SV, Denmark

PAR◇FIT™

Hydraulic and Lubrication Interchangeable Element Range



Part Numbers

Note: Bold and darker tint panel indicates the item is standard and available to order immediately.

Filter Element Competitor	Filter Element Competitor Part Number	Parker Part Number
PTI	Replaces PG-080-HH	935242
PTI	Replaces PG-080-HU	935245
PTI	Replaces PG-080-JH	935243
PTI	Replaces PG-080-JU	935246
PTI	Replaces PG-120-GH	935247
PTI	Replaces PG-120-GU	935250
PTI	Replaces PG-120-HH	935248
PTI	Replaces PG-120-HU	935251
PTI	Replaces PG-120-JH	935249
PTI	Replaces PG-120-JU	935252
Schroeder	Replaces 7EZX10	936738
Schroeder	Replaces 8T10	930114
Schroeder	Replaces A10	926567
Schroeder	Replaces A25	926568
Schroeder	Replaces A3	926566
Schroeder	Replaces AAS25	935117
Schroeder	Replaces AAS7	935116
Schroeder	Replaces AAZ3	935115
Schroeder	Replaces AS25	935114
Schroeder	Replaces AZ10	935113
Schroeder	Replaces AZ3	935112
Schroeder	Replaces BBZ10	935122
Schroeder	Replaces BBZ25	935123
Schroeder	Replaces BBZ3/BBZ5	935121
Schroeder	Replaces CCZ10	935128
Schroeder	Replaces CCZ25	935129
Schroeder	Replaces CCZ3	935127
Schroeder	Replaces CCZX3	934978
Schroeder	Replaces CZ10	935125
Schroeder	Replaces CZ25	935126
Schroeder	Replaces CZ3	935124
Schroeder	Replaces DDS25	935135
Schroeder	Replaces DDS7	935134
Schroeder	Replaces DDZ3	935133
Schroeder	Replaces DS25	935132
Schroeder	Replaces DS3	935130
Schroeder	Replaces DS7	935131
Schroeder	Replaces J10	926557
Schroeder	Replaces J25	926558
Schroeder	Replaces J3	926556
Schroeder	Replaces JZ10	935137
Schroeder	Replaces JZ25	935138
Schroeder	Replaces JZ3	935136
Schroeder	Replaces K10	925520
Schroeder	Replaces K25	925773
Schroeder	Replaces K3	925772
Schroeder	Replaces KM74	925776
Schroeder	Replaces KSX3	932674Q
Schroeder	Replaces KW	930156
Schroeder	Replaces KZX10	932676Q
Schroeder	Replaces N10	936178
Schroeder	Replaces NNZX3	941461
Schroeder	Replaces SKB-1	936547
Schroeder	Replaces SKB-1 1/4	936548
Schroeder	Replaces SKB-2	936550
Schroeder	Replaces SKB-3	936551
Schroeder	Replaces 39QM150V	941697
Schroeder	Replaces 39QM60V	941698
Schroeder	Replaces 9V5Z10	941724Q
Schroeder	Replaces KM25	941723
Schroeder	Replaces NNZX25	941725Q
Separation Technologies	Replaces ST6504	929323
Separation Technologies	Replaces ST6505	929324
Separation Technologies	Replaces ST6728	929310
Separation Technologies	Replaces ST6729	929322
Separation Technologies	Replaces ST7040	925582
Separation Technologies	Replaces ST7043	925385
Separation Technologies	Replaces ST7047	925394
Separation Technologies	Replaces ST7338	925792
Separation Technologies	Replaces ST7339	925793
Separation Technologies	Replaces ST7708	901106
Separation Technologies	Replaces ST7709	901473

Filter Element Competitor	Filter Element Competitor Part Number	Parker Part Number
Separation Technologies	Replaces ST7710	901493
Separation Technologies	Replaces ST7711	901494
Separation Technologies	Replaces ST7712	901535
Separation Technologies	Replaces ST7713	901536
Separation Technologies	Replaces ST7714	901619
Separation Technologies	Replaces ST7715	901620
Separation Technologies	Replaces ST7717	901826
Separation Technologies	Replaces ST7718	901856
Separation Technologies	Replaces ST7719	901857
Separation Technologies	Replaces ST7720	906460
Separation Technologies	Replaces ST7721	906461
Separation Technologies	Replaces ST7722	907088
Separation Technologies	Replaces ST7723	907090
Separation Technologies	Replaces ST7726	908642
Separation Technologies	Replaces ST7727	908643
Separation Technologies	Replaces ST7730	909293
Separation Technologies	Replaces ST7732	909299
Separation Technologies	Replaces ST7733	920022
Separation Technologies	Replaces ST7734	920523
Separation Technologies	Replaces ST7735	921085
Separation Technologies	Replaces ST7737	922623
Separation Technologies	Replaces ST7740	922627
Separation Technologies	Replaces ST7741	922661
Separation Technologies	Replaces ST7742	922671
Separation Technologies	Replaces ST7743	922785
Separation Technologies	Replaces ST7745	922789
Separation Technologies	Replaces ST7746	922793
Separation Technologies	Replaces ST7747	922932
Separation Technologies	Replaces ST7748	922933
Separation Technologies	Replaces ST7749	922938
Separation Technologies	Replaces ST7750	922955
Separation Technologies	Replaces ST7751	922972
Separation Technologies	Replaces ST7752	922973
Separation Technologies	Replaces ST7753	922978
Separation Technologies	Replaces ST7754	922991
Separation Technologies	Replaces ST7755	922993
Separation Technologies	Replaces ST7756	923007
Separation Technologies	Replaces ST7757	923008
Separation Technologies	Replaces ST7758	923009
Separation Technologies	Replaces ST7759	923012
Separation Technologies	Replaces ST7760	923013
Separation Technologies	Replaces ST7761	923035
Separation Technologies	Replaces ST7762	923041
Separation Technologies	Replaces ST7763	923047
Separation Technologies	Replaces ST7765	924448
Separation Technologies	Replaces ST7770	924455
Separation Technologies	Replaces ST7771	924456
Separation Technologies	Replaces ST7772	924500
Separation Technologies	Replaces ST7773	924730
Separation Technologies	Replaces ST7775	924734
Separation Technologies	Replaces ST7777	924738
Separation Technologies	Replaces ST7778	924739
Separation Technologies	Replaces ST7779	924790
Separation Technologies	Replaces ST7785	924797
Separation Technologies	Replaces ST7786	924798
Separation Technologies	Replaces ST7787	925036
Separation Technologies	Replaces ST7788	925037
Separation Technologies	Replaces ST7790	925052
Separation Technologies	Replaces ST7791	925572
Separation Technologies	Replaces ST7792	925576
Separation Technologies	Replaces ST7794	925771
Separation Technologies	Replaces ST7795	925835
Separation Technologies	Replaces ST7799	926856
Separation Technologies	Replaces ST7800	927092
Separation Technologies	Replaces ST7801	927093
Separation Technologies	Replaces ST7802	927267
Separation Technologies	Replaces ST7803	927268
Separation Technologies	Replaces ST7804	927269
Separation Technologies	Replaces ST7805	927584
Separation Technologies	Replaces ST7807	932634Q
Separation Technologies	Replaces ST7809	932636Q
Separation Technologies	Replaces ST7810	987141

Marine PAR◇FIT™

Interchangeable Element Range



The marine replacement solution

New to the **PAR◇FIT**™ family is a range of Marine Parfit Elements for a number of the most popular marine element competitors. Every Marine **PAR◇FIT**™ element is manufactured in Europe to the highest standards and is backed by our unrivalled technical support.

You can reduce stockholdings, cut costs and be sure of the ultimate performance. Parfit filters are available from ParkerStores and authorised distributors throughout Europe.

www.parker.com/parfit
www.parkerhfde.com/parfit



Contact Information:

Parker Hannifin
Hydraulic Filter Division Europe

European Product Information Centre
Freephone: 00800 27 27 5374
(from AT, BE, CH, CZ, DE, EE, ES, FI, FR, IE, IT, PT, SE, SK, UK)
filtrationinfo@parker.com

www.parker.com/hfde

Typical Applications:

- Industrial power units
- Central lubrication systems
- Diesel engine lubrication
- Marine fuel systems
- Power plants
- Gearboxes
- Wind turbines

FEATURES	ADVANTAGES	BENEFITS
Microglass III replacement elements	Multi-layered design producing high dirt holding capacity and high efficiency	Great performance value
	Wire support reduces pleat bunching and keeps performance consistent	Reliable performance throughout element life
		Reduces downtime and maximizes element life
Coreless Ecoglass III replacement elements	No metal content in element	Environmentally friendly disposal by incineration
	Reduced overall weight of 50%	Lower element replacement costs
	Easy compaction of used elements	Lower disposal costs
	Eco adaptors available	Retrofit coreless design to housings already installed
Complete performance data disclosure	All pertinent information is provided in an easy to compare format	No hidden deficiencies
		Easy selection of correct interchange part number
Elements manufactured to exacting standards of original elements	Performance guarantee as good if not better than original fit	Durable, rugged and reliable construction with high quality standards



Filter Element Competitor	Filter Element Competitor Part Number	Parker Part Number
Boll and Kirch	1143103	939319Q
Boll and Kirch	1174632 (11843 GEW.300/250 h=230, 37um)	939317Q
Boll and Kirch	1174804 (11843 GEW.300/40)	939312Q
Boll and Kirch	1179995 (11844 GEW.300/40)	939311Q
Boll and Kirch	1340006 (660-63 filter candle pleated 10 um)	939307Q
Boll and Kirch	1340009 (250-40 filter candle 25 um)	939305Q
Boll and Kirch	1340079 (294-31 filter candle 34 um)	939306Q
Boll and Kirch	1940971 (11443 GEW.324/34)	939310Q
Boll and Kirch	1940990 (11513 GEW.275/34)	939309Q
Boll and Kirch	1942562 (11445 GEW.155/100)	939318Q
Boll and Kirch	1943048 (11531 GEW.205/34)	939308Q
Boll and Kirch	1945279 (11531 GEW.205/40)	939314Q
Boll and Kirch	1946344 (11445 GEW.155/40)	939313Q
Boll and Kirch	1947342 (Ø=85, h=244, 40um)	939316Q
Boll and Kirch	1949798 (Ø=85, h=195, 40um)	939315Q
Boll and Kirch	7605706 (Flushing oil element 6.61.07 GR10-15, h=508+36)	939329Q
Boll and Kirch	7608089 (Flushing oil element 6.61.07 GR20, h=760+36)	939330Q

More part numbers on the next page.

Marine PARFIT™

Filter Element Competitor	Filter Element Competitor Part Number	Parker Part Number
Mann and Hummel	BF-1018/1	939332Q
Mann and Hummel	H-1081	939321Q
Mann and Hummel	H-12178	939323Q
Mann and Hummel	H-12225	939324Q
Mann and Hummel	H-15111/2	939338Q
Mann and Hummel	H-15190	939331Q
Mann and Hummel	H-15222/2	939333Q
Mann and Hummel	H-18300	939327Q
Mann and Hummel	H-20211	939335Q
Mann and Hummel	H-25444	939334Q
Mann and Hummel	H-25595	939326Q
Mann and Hummel	H-25669	939325Q
Mann and Hummel	H-28545	939336Q
Mann and Hummel	H-601/4	939320Q
Mann and Hummel	H-930	939328Q
Mann and Hummel	P-19185	939337Q
Pall	HC8300FKN16H	PR2798Q
Pall	HC8300FKN26H	939340Q
Pall	HC8300FKN39H	932873Q
Pall	HC8300FKP16H	PR3455Q
Pall	HC8300FKP26H	939339Q
Pall	HC8300FKP39H	932872Q
Pall	HC8300FKS16H	PR3456Q
Pall	HC8300FKS26H	937156Q
Pall	HC8300FKS39H	932874Q
Pall	HC8300FKT16H	933047Q
Pall	HC8300FKT26H	937158Q
Pall	HC8300FKT39H	932875Q
Pall	HC8304FKN16H	937165Q
Pall	HC8304FKN39H	937166Q
Pall	HC8304FKP16H	937167Q
Pall	HC8304FKP39H	937168Q
Pall	HC8304FKS16H	937169Q
Pall	HC8304FKS39H	937170Q
Pall	HC8304FKT16H	937171Q
Pall	HC8304FKT39H	937172Q
Vokes	B-62982	939303Q
Vokes	B-6358174	939301Q
Vokes	C-6352910	939322Q
Vokes	C-6360352	939304Q
Vokes	C-F7	939302Q

Static control filter elements

Filtration technology improving safety and oil life time



Static-free is a promise difficult to fulfil

It is not only a filter - the overall portfolio of system components, circuit layout, oil brand and type and environmental conditions have an important influence on the electro-static process in systems and if it occurs to a level that can cause damage.

Parker Static Control Media is an effective method of reducing the overall impact of the electro-static process. **For a static free solution, the complete system and its environment needs to be considered and evaluated, not just the filter in isolation.**

Parker Filtration offers support with analysis of the system oil, wear & tear on system components and the condition of the filter elements.



Contact Information:

Parker Hannifin
Hydraulic Filter Division Europe

European Product Information Centre
Freephone: 00800 27 27 5374
(from AT, BE, CH, CZ, DE, EE, ES, FI, FR, IE, IT, PT, SE, SK, UK)
filtrationinfo@parker.com

www.parker.com/hfde

Parker Advantages:

- Parker Static Control Filter media supports the reduction of varnish sealed in an oil system.
- Parker Static Control elements typically extend the oil life time.
- Using Parker Static Control Filter elements offers end-users no compromise in efficiency, dirt holding capacity or flow pressure drop.
- No vessel modifications are required.
- A ‘drop-in’ solution for system designers and maintenance engineers.
- Available in a wide range of element configurations.

Static-electric charging of oil reduces oil and system life time

Parker is pleased to present new patent-pending solutions to eliminate the negative impact of electro-static charging. Hydraulic fluids can be sensitive to electro-static charging when being pumped through a system or flowing through a fiberous synthetic filter media structure. The particles/molecules in the hydraulic fluid can gain electro-static load. The problem is related to the negative impact of discharging this load.

Electro-static charging can result in a sudden static discharge (sparks in oil) that, as a consequence, creates local micro hot spots in the oil. Like lightning the discharge occurs in milli-seconds and is associated with very high, localised increases in the temperature of the oil. This temperature increase causes damage to the molecular structure of the oil and hence affects its performance. The process of electro-static charging can eventually cause varnishing in the system.

Example of holes burned in the filter media



Because the discharge often occurs directly downstream of the filter element, the sparks can burn holes in the filter media. This directly influences the filter efficiency.

Fluid with good conductivity

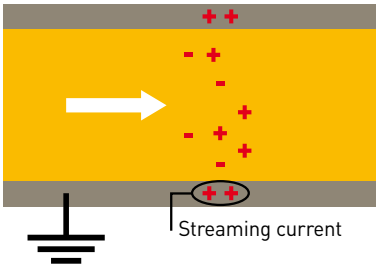

Electro-static charging can occur anywhere in the system. A conductive fluid is able to prevent the local accumulation of electro-static charge. In various components connected to earth a streaming current can be measured.

Fluid with reduced conductivity

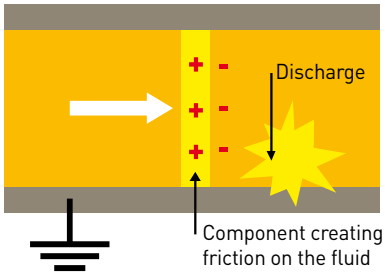

When the fluid conductivity is too low, the amount of Electro-static energy can achieve a level which is sufficient to create a sudden discharge. Just as a balloon can accumulate a specific volume of air, the lower the fluid conductivity the more electro-static energy can build up before a discharge (sparks in the oil) occurs.

Impact of oil groups

Differences amongst the base oil groups can have an impact on the presence of the electro-static discharge process in systems.

Group I oils usually apply a mixture of different hydrocarbon chains with limited or no uniformity. Typically these oils are used in basic applications.

Group II and III oils are in general more applied for demanding applications. **The lower zinc content can have a negative impact on the fluid conductivity.** Group III oils are commonly mixed with additives and positioned as synthetic or semi-synthetic oils. Oil manufacturers can decide to add additives to improve the fluid conductivity.

Group IV are more often applied for automotive and industrial applications, using chemical engineered base stocks like Polyalphaolefins (PAO's).

Group V includes Esters and Polyolesters, these are not used as base oils but added to other base oils. This influences the conductivity amongst the oils covered by this group.

Static-free is a promise difficult to fulfil

The electro-static phenomena can occur anywhere in the system. A filter can generate static electricity but other system components such as pumps, valves, hoses and piping can as well.

The parameters influencing the electro-static phenomena are mainly:

- Type of oil
- Oil temperature
- Air content of the oil
- Relaxation time of the oil in the hydraulic reservoir
- Fluid velocity in the system
- Electro-static energy created by components with rotating parts
- Conductivity & earthing of hoses and piping
- Weather conditions (not mathematically defined)

Table I: Typical element properties by oil group

	Group	I	II	III	IV	V
Element	P	+/- 0,05%	<0,05%	+/- 0,02%	Not included	Not included
Element	Zn	+/- 0,08%	<0,03%	<0,03%	Not included	Not included
Element	S	>0,03%	<0,03%	<0,03%	Not included	Not included
Viscosity Index	VI	80-120	80-120	>120	Not included	Not included
Saturation	%	<90%	>90%	>90%	Not included	Not included

Note: All given values are indicative

Parker Hannifin
Hydraulic Filter Division Europe
FDHB500UK/SCM

Tel: +45 63 12 83 00 | Email: ps@hymatik.com | www.hymatik.com | Hvidkaervej 27a, DK-5250 Odense SV, Denmark

Studies have been conducted and these suggest that varnish is formed due to the thermal degradation and oxidisation of the hydraulic oil. The discharge process in the oil can create thermal degradation of the oil. In addition to this, the discharge process can cause pitting of component surfaces.

Varnish can cause system damage and lower system productivity by:

- Varnish build-up on surfaces, blocking flow path of components like heat exchangers
- Causing sticking (servo-) valves
- Slower response of system components with moving parts
- Plugging filters

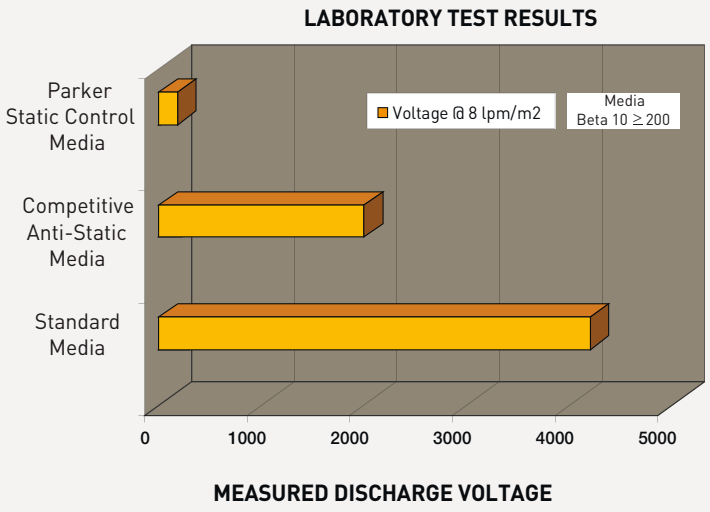

Test parameters for above results

Fluid Type:	SO 46 Ashless Hydraulic Oil
Fluid Conductivity:	< 100 pS/m
Test Temperature:	40°C
Filter Type:	In-Line T-type Pressure
Media Flow Density:	320 lpm/m^2

Varnish can block flow channels or cause 'stick-effect' in valves

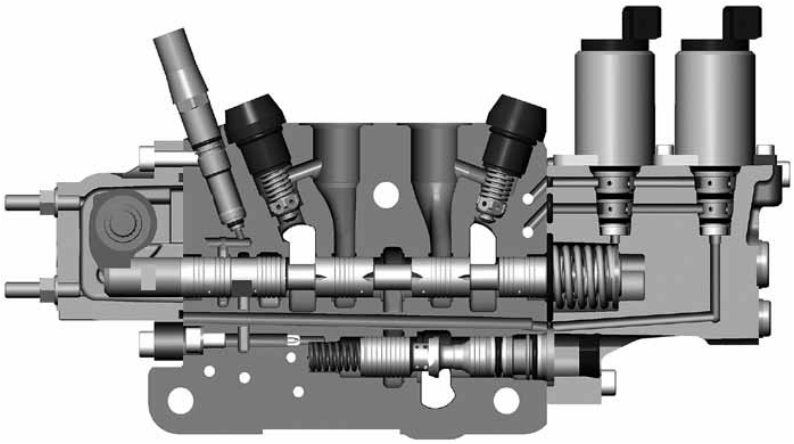

Varnish is attracted to metal surfaces, the result is an overall decrease in productivity.

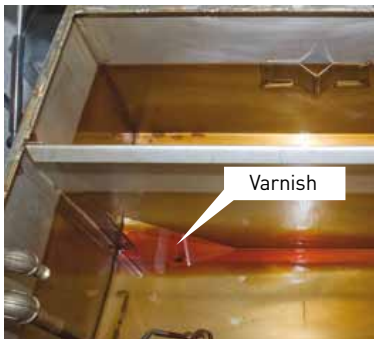

Parker filters available with static control media

TTF Series
Tanktop Mounted Return Line Filters, Max 500 l/min - 10 bar

- Aluminium filter head housing
- In-to-out flow
- ATEX certified version available
- Multiple - return ports (on request)



STF Series
Tanktop Mounted Return Line Filters, Max 500 l/min - 10 bar

- Steel filter housing
- In-to-out flow
- ATEX certified version available
- Multiple - return ports (on request)



BGT Series
Tanktop Mounted Return Line Filters, Max 2400 l/min - 10 bar

- Aluminium filter housing
- In-to-out flow
- ATEX certified version available
- Multiple - return ports (on request)



15/40/80CN Series
Medium Pressure Filters, Max 600 l/min - 70 bar

- Aluminium filter head housing
- In-to-out flow
- ATEX certified version available
- Multiple - return ports (on request)



EPF *i*protect® (Ecological Pressure Filter)
High Pressure Filters, Max 700 l/min - 450 bar

- Steel filter housing
- Patented filter element and reduction of waste typically over 50%
- Reduced surface area
- ATEX certified version available



Other filter types available on request.

Ordering Information

TTF Series

Part Number	Flow L/min	Bypass	Ports	Included Options	Micron Rating Bx(c)>200	Replacement Element Part Numbers
TTF302ABP2EG121	90	1.5 bar	G¾	None	2	937750A
TTF310ABP2EG121	90	1.5 bar	G¾	None	10	937786A
TTF602ABP2EG203	170	1.5 bar	G1¼	Diffuser type T	2	937747A
TTF610ABP2EG203	170	1.5 bar	G1¼	Diffuser type T	10	937783A
TTF802ABP2EG243	300	1.5 bar	G1¼	Diffuser type T	2	937745A
TTF810ABP2EG243	300	1.5 bar	G1¼	Diffuser type T	10	937781A
TTF1002ABP2HG24A	500	2.0 bar	G1½	Diffuser type T	2	937743A
TTF1010ABP2HG24A	500	2.0 bar	G1½	Diffuser type T	10	938010A

STF Series

Part Number	Flow L/min	Bypass	Ports	Included Options	Micron Rating Bx(c)>200	Replacement Element Part Numbers
STF802ABP2ELC24G	300	1.5 bar	1½" SAE-flange	Airtight funnel type T	2	937745A
STF810ABP2ELC24G	300	1.5 bar	1½" SAE-flange	Airtight funnel type T	10	937781A
STF1002ABP2ELC24G	500	1.5 bar	1½" SAE-flange	Airtight funnel type T	2	937743A
STF1010ABP2ELC24G	500	1.5 bar	1½" SAE-flange	Airtight funnel type T	10	938010A

Ordering Information

BGT Series

Part Number	Flow L/min	Bypass	Ports	Included Options	Micron Rating Bx(c)>200	Replacement Element Part Numbers
BGT1202ABPER323	500	1.5 bar	2" SAE-3000-PSI	Diffuser type T	2	937741A
BGT1210ABPER323	500	1.5 bar	2" SAE-3000-PSI	Diffuser type T	10	937777A
BGT1502ABPER483	1000	1.5 bar	3" SAE-3000-PSI	Diffuser type T	2	937738A
BGT1510ABPER483	1000	1.5 bar	3" SAE-3000-PSI	Diffuser type T	10	937774A
BGT1702QBPER483	2000	1.5 bar	3" SAE-3000-PSI	Diffuser type T	2	937736A
BGT1710QBPER483	2000	1.5 bar	3" SAE-3000-PSI	Diffuser type T	10	937772A

15/40/80C N Series

Part Number	Flow L/min	Bypass	Ports	Included Options	Micron Rating Bx(c)>200	Replacement Element Part Numbers
15CN102AVPKG164	50	3.5 bar	G1"	none	2	932610A
15CN110AVPKG164	50	3.5 bar	G1"	none	10	932612A
15CN202AVPKG164	100	3.5 bar	G1"	none	2	932616A
15CN210AVPKG164	100	3.5 bar	G1"	none	10	932618A
40CN102AVPKG244	180	3.5 bar	G1½"	none	2	926716A
40CN110AVPKG244	180	3.5 bar	G1½"	none	10	926836A
40CN202AVPKG244	280	3.5 bar	G1½"	none	2	926717A
40CN210AVPKG244	280	3.5 bar	G1½"	none	10	926838A
80CN102APVKG324	370	3.5 bar	G2"	none	2	932659A
80CN110APVKG324	370	3.5 bar	G2"	none	10	932661A
80CN202AVPKG324	530	3.5 bar	G2"	none	2	932665A
80CN210AVPKG324	530	3.5 bar	G2"	none	10	932667A

EPF iprotect (Ecological Pressure Filter)

Part Number	Flow L/min	Micron Rating	Bypass	Ports	Micron Rating Bx(c)>200	Replacement Element Part Numbers
EPF1102AIBPMG081	40	2	7 bar	G½"	2	944418A
EPF1110AIBPMG081	40	10	7 bar	G½"	10	944420A
EPF2202AIBPMG121	140	2	7 bar	G¾"	2	944430A
EPF2210AIBPMG121	140	10	7 bar	G¾"	10	944432A
EPF3202AIBPMG161	250	2	7 bar	G1"	2	944438A
EPF3210AIBPMG161	250	10	7 bar	G1"	10	944440A
EPF4202AIBPMG201	450	2	7 bar	G1¼"	2	944446A
EPF4210AIBPMG201	450	10	7 bar	G1¼"	10	944448A
EPF5102AIBPMG241	500	2	7 bar	G1½"	2	944450A
EPF5110AIBPMG241	500	10	7 bar	G1½"	10	944452A

⚠ WARNING

FAILURE OR IMPROPER SELECTION OR IMPROPER USE OF THE PRODUCTS AND/OR SYSTEMS DESCRIBED HEREIN OR RELATED ITEMS CAN CAUSE DEATH, PERSONAL INJURY AND PROPERTY DAMAGE.

This document and other information from Parker Hannifin Corporation, its subsidiaries and authorised distributors provide product and/or system options for further investigation by users having technical expertise. It is important that you analyse all aspects of your application, including consequences of any failure, and review the information concerning the product or system in the current product catalogue. Due to the variety of operating conditions and applications for these products or systems, the user, through their own analysis and testing, is solely responsible for making the final selection of the products and systems and assuring that all performance, safety and warning requirements of the application are met.

The products described herein, including without limitation, product features, specifications, designs, availability and pricing, are subject to change by Parker Hannifin Corporation and its subsidiaries at any time without notice. **Offer of Sale** Please contact your Parker representation for a detailed "Offer of Sale".

The Par-Gel Filter

Water Removal Filter Elements



Stopping free water causing system damage

Increases system efficiency and machine productivity

The Par-Gel filter elements are an effective tool in controlling water related problems in hydraulic power and lubrication systems. Increases system efficiency and machine productivity and reduces the chance of catastrophic system failure.



Contact Information:

Parker Hannifin
Hydraulic Filter Division Europe

European Product Information Centre
Freephone: 00800 27 27 5374
(from AT, BE, CH, CZ, DE, EE, ES, FI, FR, IE, IT, PT, SE, SK, UK)
filtrationinfo@parker.com

www.parker.com/hfde

Product Features:

- Par-Gel elements control water related problems in hydraulic power and lubrication systems.
- Helps reduce component wear and system downtime.
- Increases system efficiency and machine productivity.
- Reduces the chance of catastrophic system failure.

The Par-Gel Filter

Water Removal Filter Elements

Par-Gel filter elements are an effective tool in controlling water related problems in hydraulic power and lubrication systems.

There is more to proper fluid maintenance than just removing particulate matter. You need to remove water as well. Parker has developed Par-Gel water removal elements to be used in combination with particulate filters to provide significant benefits.

- Less component wear, consequently less component generated contaminants.
- Significant reduction of costly downtime and replacement of failed components.
- Increased efficiency of the system, thereby improving machine productivity.
- Less frequent replacement and disposal of contaminated fluid.
- Reduced chance of catastrophic failure.



Water as a contaminant.

Whether you used a mineral-base or synthetic fluid, each will have a water saturation point. Above this point, the fluid cannot dissolve or hold any more water. This excessive water is referred to as 'free' or emulsified water. As little as .03% (300 ppm) by volume can saturate an hydraulic fluid. Many mineral-base and synthetic fluids, unless specifically filtered or treated in some way, will contain levels of water above their saturation point.

Water is everywhere!

Storage and handling. Fluids are constantly exposed to water and water vapour while being handled and stored. For instance, outdoor storage of tanks and drums is common. Water settles on top of tanks and drums and infiltrates the container, or is introduced when the container is opened to add or remove fluid.
In-service. Water can get into the system via worn cylinder and actuator seals, or through reservoir openings. Water can come into contact with these entry points through water based cutting fluids or when water and/or steam are used for cleaning.

Specification



Condensation is also a prime water source. As fluid cools in a reservoir, the temperature drop condenses water vapour on interior surfaces, which in turn causes rust. Rust scale in the reservoir eventually becomes particulate contamination in the system.

Microbial growth as a contaminant.

Once water enters a system, growth of micro-organisms begins. Since water is one of the end products of the breakdown of hydrocarbon fluid, once started, the process is somewhat self-sustaining.

Slime is evidence of microbial growth, as is the apparent increase in viscosity of the fluid, obnoxious odour and discoloured fluid. The results are: short fluid life, degraded surface finish and rapid corrosion.

Water generated damage and operating problems.

- Corrosion
- Accelerated abrasive wear
- Bearing fatigue
- Additive breakdown
- Increased acid level
- Visosity variance
- Electrical conductivity
- Forms of water in fluid
- Dissolved water – below saturation point
- Free water – emulsified or in droplets*.

Water in the system creates oxides, slimes and resins. Corrosion is an obvious by-product and creates further contaminants in the system.

The effect is compounded, as you now have both particulate contaminant and water working together.

The particulate contamination can be as simple as rust flaking from reservoir walls. Anti-wear additives break down in the presence of water and form acids. The combination of water, heat and dissimilar metals encourages galvanic action. Pitted and corroded metal surfaces and finishes result.

Further complications occur as temperature drops and the fluid has less ability to hold water. As the freeze point is reached, ice crystals form, adversely affecting total system function. Operating functions may become slowed or erratic.

Electrical conductivity becomes a problem when water contamination weakens insulating properties of fluid (decreases dielectric kV strength).

Testing your fluid for water.

A simple ‘crackle test’ will tell you if there is water in your fluid. Simply take a metal dish or spoon with a small amount of fluid. Apply a flame under the container with a match. If bubbles rise and ‘crackle’ from the point of applied heat, you have free water.



ParTest fluid analysis. For complete analysis, Parker offers Par-Test fluid analysis. Your Parker representative can supply you with a fluid container, mailing carton and appropriate forms to identify your fluid and its use. An independent lab performs complete spectrometric analysis, particle counts, viscosity and water content.

Results are sent directly to the requester.

* Excessive free water must be removed from the system before filtering is attempted. In systems with gross amounts of water (1% to 2% by volume), settling or vacuum dehydration should be considered before using Par-Gel filter elements.

Tel: +45 63 12 83 00 | Email: ps@hymatik.com | www.hymatik.com | Hvidkaervej 27a, DK-5250 Odense SV, Denmark

The Par-Gel Filter

Water Removal Filter Elements

Features & Benefits

Removing water.

Using a Par-Gel water removal element is an effective way of removing free water contamination from your hydraulic system. It is highly effective at removing free water from mineral-base and synthetic fluids.

The Par-Gel filter media is a highly absorbent copolymer laminate with an affinity for water. However, hydraulic or lubrication fluid passes freely through it and the water is bonded to the filter media.



Photo above shows 'dry' Par-Gel filter media and the same media swollen with absorbed water.

Parker technology and expertise at your disposal.

Choosing the correct filters can save money and minimise problems caused by particulate and water contaminants in hydraulic and lubricating fluids. Parker provides hard data and advice on choosing from a wide range of filter configurations, flow patterns and flow pressure capabilities.

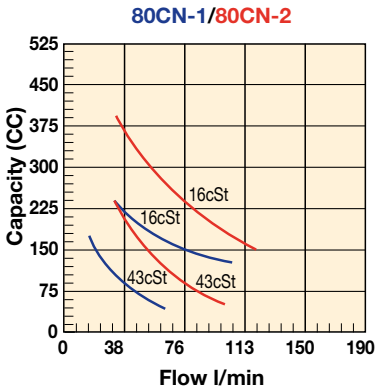

How many filter elements will I need?

Suppose you would like to remove water from contaminated oil stored in a 750 litre tank. The tank is found to have 1000 ppm of water (very contaminated). The circulation rate will be 40 lpm for the 40cSt fluid.

Example: How many single length 80CN elements will be needed to reduce the water to normal saturation levels. To find the answer, use the conversion charts and capacity curves for the 80CN-1 element.

1. 1000 ppm start – 300 ppm finish = 700 ppm removed
2. 700 ppm water x 0.0001% = .07%
   .07% x 750 litres = 0.525 litres water total
3. Capacity = 89cc at 40cSt & 40 lpm to pressure drop of 1.7 bar.
   89cc per element x 0.001 litres per cc = 0.089 litres per element
4. $\frac{\text{0.525 litres total water}}{\text{0.089 litres per element}}$ = 6 elements*

* The replacement value of this fluid may range from €1500.00 to €4500.00 (€0.50 to €1.25 litre). An estimated element cost of €150.00 each, the saving could be as much as €3600.00!

Using Par-Gel filter elements saves money in fluid and replacement component costs. Also, the frequency of fluid disposal and the problems associated with it are greatly reduced.

Filter capacity. There are no accepted and approved water capacity testing or reporting standards. Consequently, there is virtually no way to compare one element capacity with another. It is also difficult to simulate a specific application in testing... making it hard to predict field performance.

Why the discrepancies? Water removal media capacity is the result of the interplay of four variables: flow rate, viscosity, bypass setting and the media itself.

Here's an example: two identical elements, testing the same fluid, varying only the flow rate.

This is a 15% reduction in capacity, due to changing only the flow rate! Now, look at what happens when the test flow rate is the same and the viscosity is changed.

	Element A	Element A'
Flow rate:	11 lpm	38 lpm
Viscosity:	15 cSt	15 cSt
Test capacity:	425 ml	360 ml

Twice the capacity can be achieved just by manipulating the test viscosity!

	Element B	Element B'
Flow rate:	76 lpm	76 lpm
Viscosity:	40 cSt	15 cSt
Test capacity:	250 ml	550 ml

Naturally, having a lower bypass valve setting limits the capacity. Since the life of the element is measured in pressure drop, using higher bypass valve settings will increase apparent life (all other conditions equal).

We recommend 1.7 bar bypass valves to get adequate life from Par-Gel filter elements.

Capacity also depends on the media itself. That's why Parker spent two years researching the media used in Par-Gel filter elements. We tested all known media, and worked closely with our suppliers to achieve maximum water absorbency.

Tel: +45 63 12 83 00 | Email: ps@hymatik.com | www.hymatik.com | Hvidkaervej 27a, DK-5250 Odense SV, Denmark

Specification

How we report:

Our goal is to give our customers usable data. Why show test results at a lower viscosity (13cSt for example), if the typical application uses 41cSt fluid? So, we report at 41cSt to give typical field application capacity, and 15cSt for competitive comparisons. But keep in mind when comparing, you still have to consider flow rate.

What it all means:

You deserve to know how an element will work for you in your applications. So, we test and report our data in such a way that it helps you predict element performance and life.

Be wary of claims that say... “this element holds one litre (or 5 litres) of water”. What was the test flow rate? fluid viscosity? bypass valve setting? Was it run as a ‘single pass’ or ‘multipass’ test?

Rely on Parker to give you the facts and data you need. Our goal is to better protect your systems and components...and we start up-front by telling you what you need to know.

Is there any other way to do business?

Add it all up.

Broad selection, competitive prices, off-the-shelf availability, on-time delivery, high-efficiency filter media, reduced system contaminant and longer component life. When you add it all up, we think you’ll agree...

Conversion Factors

If you have:	Multiply by:	To get:
mg/l	0.00009	%
ppm	0.0001	%
ml	1.0	cc
gallons	4.54	litres

Typical Saturation Points

Fluid type	PPM	%
Hydraulic	300	0.03
Lubrication	400	0.04
Transformer	50	0.005

Parker Par-Gel water removal filter elements are available in these standard Parker filter housings:

Fluid model series	Length	Element part number
40CN-1	Single	931412
40CN-2	Double	931414
80CN-1	Single	931416
80CN-2	Double	931418
Guardian®	Single	932019
Moduflow RFP 2-2 (10MFP)	Double	940734

Ideal Applications for Par-Gel filter elements



Guardian Portable Filtration System



Filtration Trolley

Parker Hannifin
Hydraulic Filter Division Europe
FDHB500UK/Par-Gel

Tel: +45 63 12 83 00 | Email: ps@hymatik.com | www.hymatik.com | Hvidkaervej 27a, DK-5250 Odense SV, Denmark

Co-Polymer and Steel Reservoirs

Hydraulic Reservoir Solutions



Tailormade solutions for reservoirs

Supporting hydraulic system designers with reservoir solutions

Parker hydraulic tank solutions apply to a wide variety of applications. Co-Polymer tanks that provide a unique potential to be 'designed to fit' an individual application and cost saving steel reservoir solutions developed to withstand extreme conditions.



Contact Information:

Parker Hannifin
Hydraulic Filter Division Europe

European Product Information Centre
Freephone: 00800 27 27 5374
(from AT, BE, CH, CZ, DE, EE, ES, FI, FR, IE, IT, PT, SE, SK, UK)
filtrationinfo@parker.com

www.parker.com/hfde

Product Features:

- Parker hydraulic tank solutions apply to a wide variety of applications.
- Co-Polymer tank designs to meet OEM requirements.
- Cost-saving and quality steel tanks.
- On-board, integrated breathers, filters and level indicators.

Co-Polymer and Steel Reservoirs

Hydraulic Reservoir Solutions

Features & Benefits

Parker hydraulic tank solutions are applied to a wide variety of markets		
Hyd. & lube oil filtration	**Co-polymer tanks**	**Steel tanks**
Agriculture	X	X
Construction equipment	X	X
Marine		X
Material handling	X	
Mining		X
Road building equipment	X	X
Transportation	X	X
Waste management / Environmental control	X	X

An introduction to Parker Hydraulic Reservoir Solutions
Parker's experience in designing fluid power equipment will help a system designer to save costs at every stage of hydraulic system development.



Co-polymer tank example

Original Equipment Manufacturers are continually looking to reduce manufacturing costs and increase operating efficiency and it's here that Parker Hannifin's European Filtration Division offers complete solutions. Beside high quality steel tanks supplied by Parker and featured in this brochure, Parker also designs and supplies revolutionary, lightweight co-polymer reservoirs with tank top mounted or integrated filter and tank air filter options.

Both tank types can typically represent a significant contribution to cost savings. Because of the differing features and benefits between the metal and co-polymer tanks, Parker is able to offer customers the most appropriate tank concept to meet their specific requirements.

Saving costs with complete Parker Hydraulic Tank Solutions

- A partnership in supply chain management reduces costs
- An integration of reservoir functions
- Reduction of component parts
- Integrated hydraulic filter and air filter benefits
- Integrated oil level measurement benefits
- Standard & customised solutions offered
- Flexibility related to shape & dimension of each tank
- Leak-proof connections
- Parker element for guaranteed quality filtration



Steel tank example

Typical Applications

Unique tank solutions designed to meet customer needs

Today Parker steel tank solutions are typically applied to commercial vehicle applications for example waste management and the transportation market. Customers manufacturing hook-arm systems, truck manufacturing or vehicle body builders are further examples of potential customers for a complete steel tank assembly. A more common use of co-polymer tanks can be seen in materials handling equipment, agricultural and construction equipment markets. Typical applications are warehouse trucks, smaller sized wheeled loaders, telescopic handlers, dumpers, mini excavators and agricultural machinery.



with the courtesy of Grove



Specifications

Product Architecture

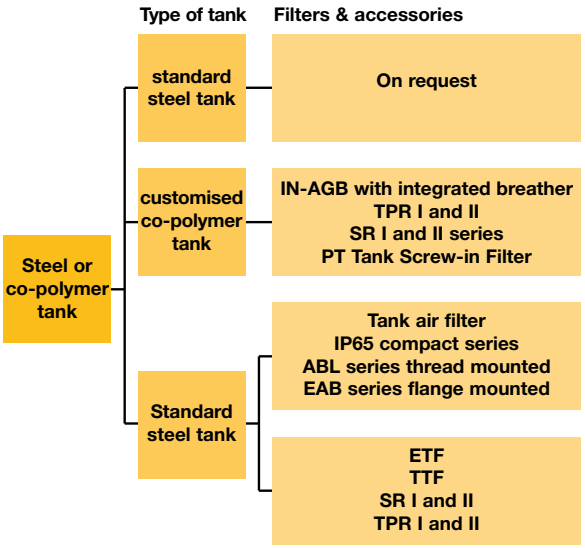



Co-polymer tank with integrated breather and IN-AGB filter



Steel tank with integrated options

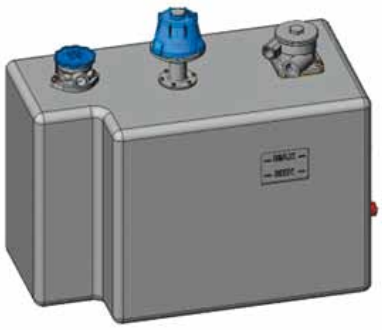

Example of co-polymer tank with top mounted filters and air filters

Design aspects	Co-polymer reservoir	Steel reservoir
Complicated shapes	X	
Styling of reservoir meets overall styling of vehicle	X	
Weight reduction	X	
Long-term temperatures Tmin< -30°C or Tmax> +120°C	(depends of material properties)	X
High mechanical load on tank (tank contributes to strength of chassis)		X
All-in-one concept	X	
High level of tank Pressurisation		X
Suitable for heavy duty equipment	X	X

Design note: All customised tanks are engineered solutions based on detailed analysis of customer requirements and specifications. Detailed knowledge of co-polymer materials, implies that customised materials can be made available to meet specific demands. Depending on technical and commercial requirements, Parker is able to advise each customer individually, about the most suitable and economical reservoir solution, made from co-polymer or steel.

Tel: +45 63 12 83 00 | Email: ps@hymatik.com | www.hymatik.com | Hvidkaervej 27a, DK-5250 Odense SV, Denmark

Co-Polymer Reservoirs

Hydraulic Reservoir Solutions

Features, Benefits & Specifications

Where a tailormade tank design is the solution
The lightweight co-polymer tank is an all-in-one solution that keeps in mind a customer's specific design requirements. Each tank is unique in terms of shape, dimensions and integrated functions. It is equipped with an integrated tank top mounted return line filter and tank air filter. All filters and air filters are supplied as standard with the patented, environmentally friendly *LEIF*® element.

Reliable connections
Reliable, leak-proof connections have always been a critical aspect for co-polymer tanks. Parker has developed a technology using metal attachment components. All metal attachment components are moulded in with the co-polymer tank wall, ensuring a reliable, leak-proof connection between the tank and the components that are attached to it.

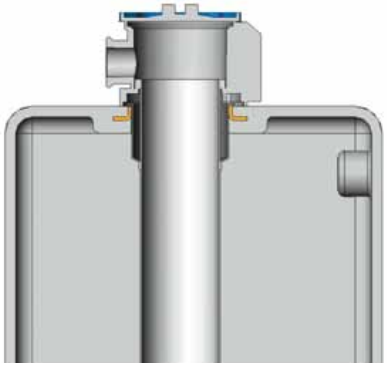

Parker Filtration has designed high tech sealing solutions for tank top mounted filters.

These attached connections (e.g. a suction connection for pumps, drains, vents, or a filler opening) can easily be achieved, as well as providing indications for minimum and maximum oil levels. Metal attachment connections can be made available for hose couplings, a flange attachment or thread attachment.

Co-polymer reservoirs are designed to meet the stringent demands of our customers. All relevant aspects are analysed, from material properties and operational conditions to dynamic load and requirements for equipment servicing.

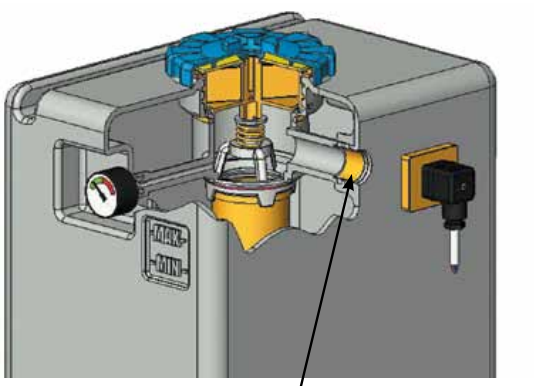

Customised integrated metal attachment
"Tank also features integrated level measurement"

Level measurement
Oil level indication can be fully integrated into the tank design. This feature eliminates the need for level glasses, which are fragile and an additional potential source of leakage when mounted incorrectly.

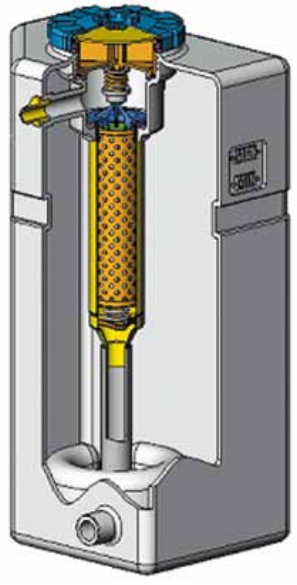

Example of customised co-polymer tank

Features, Benefits & Specifications

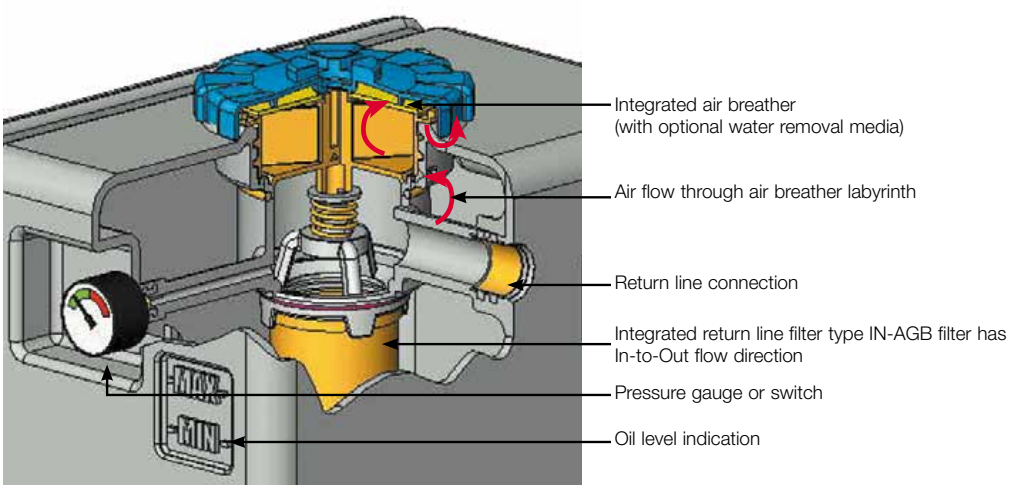

Example of a customised tank with an integrated return line filter and air filter

The ultimate all-in-one design
A more frequent use of co-polymer tanks located on the outside of mobile equipment often results in specific requirements relating to styling.

Despite the compact design of Parker tank top mounted filters and air filters, these parts can influence aspects related to styling or cabin accessibility.

This concept is ideal for applications where space is at a premium.

Parker Filtration's unique all-in-one design, where the return line filter and air filter are both located under one cover is a concept that offers great possibilities related to tank styling. The high quality of the co-polymer material ensures a long-term stability of the chosen colour.

This all-in-one design features the IN-AGB type return line and integrated air filter with labyrinth. The labyrinth prevents oil leakage through the air filter. The connection(s) for return line(s) and filler port are integrated in the tank. This avoids having to have hydraulic hoses placed on top of the tank.

Environmentally friendly
Parker considers care for the environment as a social obligation. The environmentally friendly *LEIF*® element (Low Environmental Impact Filter) is applied to the return line filters and breathers type ABL and EAB.

What makes this element so special is that the metal sleeve can be re-used. As a result, this filter element component no longer ends up in the waste disposal; only the contaminated filter medium is disposed of as chemical waste. With *LEIF*® filter elements, the disposal and processing cost may be reduced by as much as 50%.

The *LEIF*® concept safeguards the use of genuine Parker parts.

***LEIF*® elements:**
- Environmentally friendly filtration
- Re-usable steel element sleeve
- Patented elements result in guaranteed quality of filtration
- Saves element disposal costs typically by up to 50%
- Supports ISO 14001 certification



IN-AGB with LEIF® element

Cost-effective
The advantages of this co-polymer concept are obvious:

- Lightweight
- Flexibility with respect to tank shapes
- Characteristics of plastic material can be customised to meet specific requirements
- Integration of several functions limits the use of individual components
- The tank can be purchased and supplied as a complete unit

Tel: +45 63 12 83 00 | Email: ps@hymatik.com | www.hymatik.com | Hvidkaervej 27a, DK-5250 Odense SV, Denmark

Steel Reservoirs

Hydraulic Reservoir Solutions

Features, Benefits & Specifications

Parker steel reservoirs withstand extreme conditions
Standard steel tanks are often specified for commercial vehicle side mounting. Parker steel tanks are built to last in extreme conditions. Extreme weather conditions and heavy duty vehicle movements can be resisted by our tank design.

Quality design
As with co-polymer tanks, steel tanks offer leak proof connections and are vigorously tested against leakage. Additionally, they are painted with primer and topcoat to ensure maximum protection against corrosion.



To help reduce dirt build-up, our steel tanks are designed with smooth corners and the upper front part of the tank can be sloped which offers extra benefits:

- Easier service access for the filter and tank air filter
- Dirt, water, snow and ice will not adhere to the tank surface next to the breather and filter

Suction port(s), covered with anti-vortex plate(s), allow low oil levels giving the operator an increased operational capacity. Before delivery the steel tanks are thoroughly washed inside and ready for system assembly.

Diverse tank size options are available
With space at a premium in most truck chassis configurations and the need to deal with toolboxes, compressed air reservoirs and other equipment, tank dimensions are always an issue. To meet the specific environment requirements Parker Filtration offers several tank sizes.

Steel tanks are fully equipped. Our customers can choose from a wide choice of filter options. Parker considers care for the environment. The environmentally friendly *LEIF*® element is also applied to steel tank solutions. Additionally, Parker steel reservoirs are equipped with an efficient air filter, a level gauge, plugs, a suction kit and mounting brackets. The level gauge can be re-located on the other side of the tank if user visibility is an issue.

Note: For further information about Parker steel reservoir solutions, contact your local Parker Sales Company.

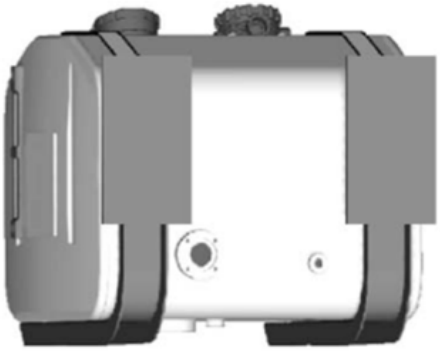

Steel tank with with customised chassis mounting straps



Detailed sectional view of Tanktopper II with integrated air filter

Tel: +45 63 12 83 00 | Email: ps@hymatik.com | www.hymatik.com | Hvidkaervej 27a, DK-5250 Odense SV, Denmark

Environmental Air Filters

Reservoir Equipment



When it comes to 'green' breathing

Ecology and Economy

EAB Series and ABL Series environmental air filters provide hydraulic system designers, OEM's and end users eco-friendly advantages for a wide range of mobile applications such as forestry equipment and industrial uses such as industrial power units.



Contact Information:

Parker Hannifin
Hydraulic Filter Division Europe

European Product Information Centre
Freephone: 00800 27 27 5374
(from AT, BE, CH, CZ, DE, EE, ES, FI, FR, IE, IT, PT, SE, SK, UK)
filtrationinfo@parker.com

www.parker.com/hfde

Product Features:

- EAB Series – air flows up to 1500 l/min. Visual gauge option.
- ABL Series – 3 micron Abs. *LEIF*® element. 2 sizes.
- 2 environmental breather options suitable for most applications.

EAB Series

Reservoir Equipment

Typical Applications



- Agricultural machines
- Articulated dump trucks
- Forestry equipment
- Wheeled loaders
- Lubricating systems
- Excavators
- Mobile cranes
- Industrial power units

Technical Data

The filter has been designed to achieve a low pressure drop and high dirt holding capacity with airflows up to 1500 l/min. A compact EAB10 with airflows up to 1000 l/min is also available.

Construction:
Glass reinforced composite housing with Eco-element.

Filter media options:
P020: High quality polyester media. 2µm (abs).
C015: Polyester media with water-resistant layer. 1.5µm (abs)
Q010: Glass fibre media. 1.0µm (abs)

Mounting options:
With 6 screws. Includes machine and plate screws, a strainer and gaskets.
External threads G¾", G1".
Internal thread G¾".

Options:
Visual gauge type vacuum/pressure indicator.
Overpressure valve, pressure setting 0.2 bar.
EAB10 cannot be specified with an overpressure valve and vacuum/pressure gauge at the same time.

Advantages of the EAB filters:
Easy maintenance.
Indicator states the need for element change.
Quick and easy element change (no tools required).

Environmentally friendly:
EAB elements contains no metal parts: therefore it can be crushed and burned minimising the volume of waste material.

Other features:
The optional indicator is located in a safe place inside the housing.
Housing includes mounting holes for a padlock, which allows you to increase the security against theft and vandalism.
Suitable for temperatures –20°C to +80°C.

Pressure Drop Curves

Δp total = Δp housing + Δp element. The recommended level of the initial pressure drop for this filter is max 0.02 bar (2.0 kPa).

EAB10 Housing Only

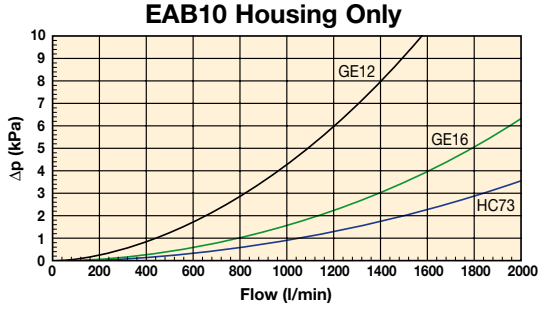

EAB10 Elements

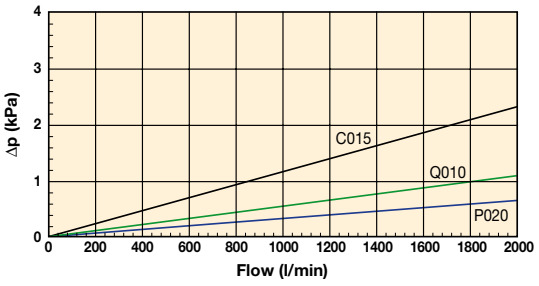

EAB20 Housing Only

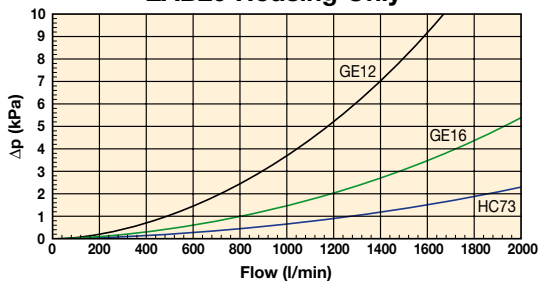

EAB20 Elements

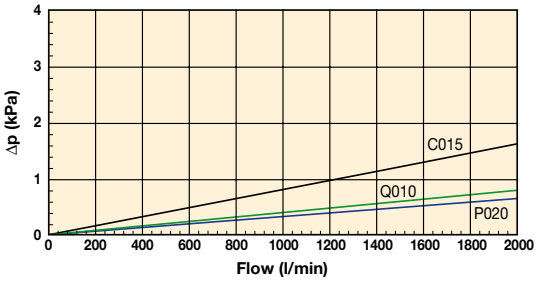

Specification

EAB10

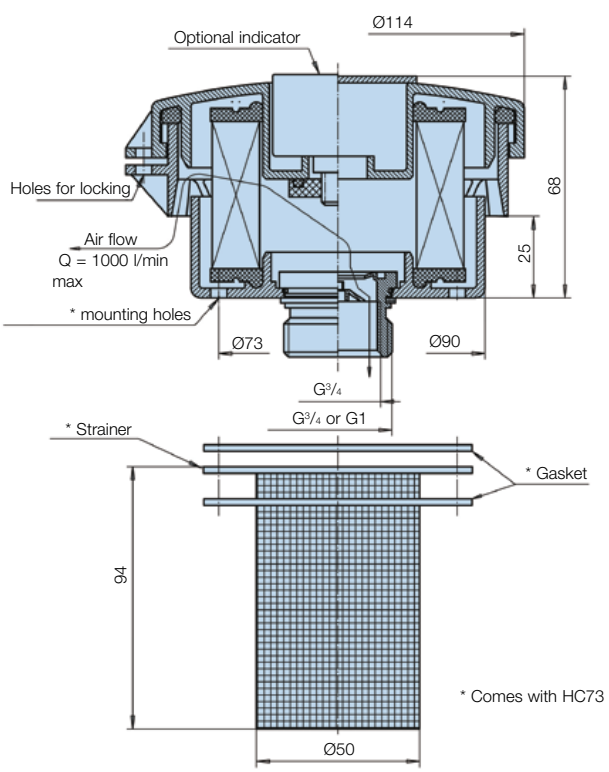

EAB20

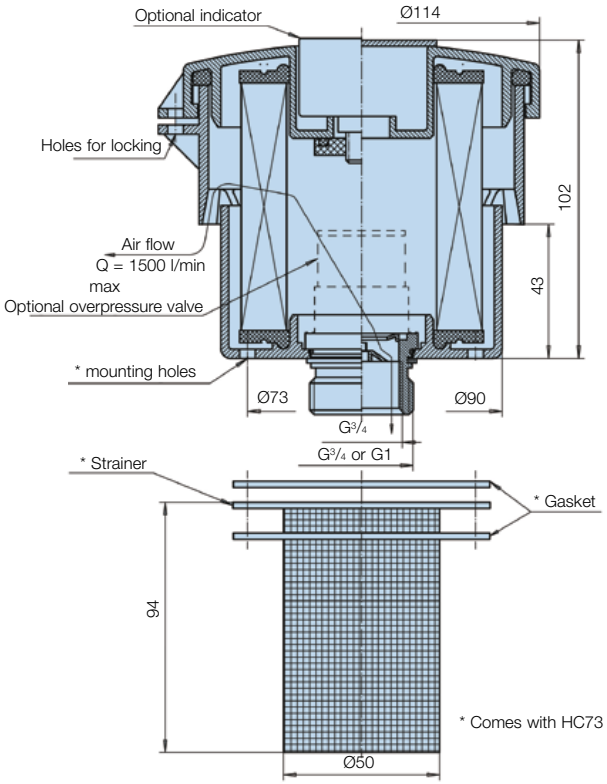

NOTICE!
Air filters are an essential part of the system and the element needs to be replaced regularly.

6 hole fixing mounting dimensions

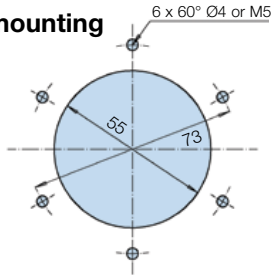

Mounting	Code
6 mounting holes	HC73
G1 external	GE16
G¾ external	GE12
G¾ internal and G1 external	GS12
M33 x 2 external	ME33

Note: Optional indicator scale –0.35/–0.2 to +0.2/+0.35 bar.
Note: C015 elements always come with the mounting holes where (in case the connection is not HC13) they not act as drain holes.
Note: The EAB with HC73 comes with a strainer, except when the EAB has an overpressure valve.

Tel: +45 63 12 83 00 | Email: ps@hymatik.com | www.hymatik.com | Hvidkaervej 27a, DK-5250 Odense SV, Denmark

EAB Series
Reservoir Equipment

Ordering Information

Standard products table

Part number	Supersedes	Model	Media	Mounting	Overpressure valve	Indicator	Replacement elements
EAB20P020HC73V2	EAB20P020HC73-V2	EAB20	P020	HC73	V2		**EAC20P020**
EAB10P020HC73	N/A	EAB10	P020	HC73			**EAC10P020**
EAB20P020HC73	N/A	EAB20	P020	HC73			**EAC20P020**
EAB20P020GE16	N/A	EAB20	P020	GE16			**EAC20P020**
EAB20P020HC73A	EAB20P020HC73-A	EAB20	P020	HC73		A	**EAC20P020**

Product configurator

Product number	Media options		Mounting options		Overpressure valve options		Indicator options	
EAB20	**P020**	2µ abs polyester	**HC73**	6 hole fixing incl. strainer		No overpressure valve		No indicator
EAB10	**C015**	1.5µ abs water resistant	GE12	G¾ external thread	V2	0.2 bar	A	Vacuum/pressure gauge
	Q010	1.0µ abs glass fibre	**GE16**	G1 external thread				
			GS12	G¾ internal and G1 external thread				
			ME33	M33 x 2 external thread				

Replacement elements

Product number	Media options	
EAC20	**P020**	2µ abs polyester
EAC10	**C015**	1.5µ abs water resistant
	Q010	1.0µ abs glass fibre

Note 1: Part numbers featured with bold highlighted codes will ensure a 'standard' product selection.
Note 2: For alternative part number options, consult Parker Filtration.

Tel: +45 63 12 83 00 | Email: ps@hymatik.com | www.hymatik.com | Hvidkaervej 27a, DK-5250 Odense SV, Denmark

ABL Series
Reservoir Equipment

Typical Applications



The Parker Filtration ABL-1 and ABL-2 Series Air Filters.

- Saw mills
- Agricultural machines
- Articulated dump trucks
- Forestry equipment
- Wheeled loaders
- Lubricating systems
- Excavators
- Industrial power units
- Mobile cranes

Technical Data

Assembly:
Tank top mounted.

Connections:
Threads G1¼ (ISO 228), 1½" (UN-16-2B).

Seal material:
Seals integrated in *LEIF*® element.

Operating temperature range:
-20° to +80°C.

Filtration media:
3 micron abs (Beta value=ß75 ≥ 3 in air).

Flow fatigue characteristics:
Filter media is supported so that the optimal fatigue life is achieved.

Vacuum indicator:
ABL-1 on request only, ABL-2 0.04 bar. Visual with latch out memory.

Breather housing:
High impact strength composite.

Filter element:
LEIF® element.

Options:
- Adaptor with filter connection.
- Single adaptor.
- Breather with integrated pressure relieve valve for pressurised tank on request only.

LEIF® elements can be used for hydraulic fluids and HEES type fluids only. For other fluids contact Parker Filtration.

Pressure Drop Curves

ABL1

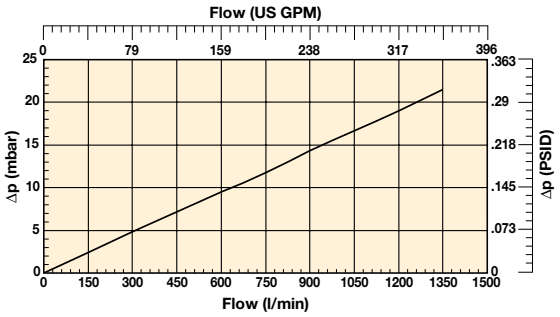

ABL2

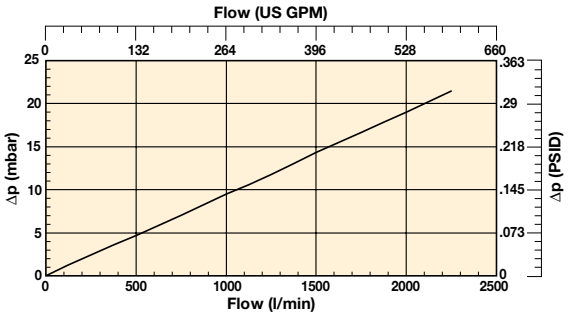

Parker Hannifin
Hydraulic Filter Division Europe
FDHB500UK/Reservoir

Tel: +45 63 12 83 00 | Email: ps@hymatik.com | www.hymatik.com | Hvidkaervej 27a, DK-5250 Odense SV, Denmark

ABL Series

Reservoir Equipment

Specification

ABL-1

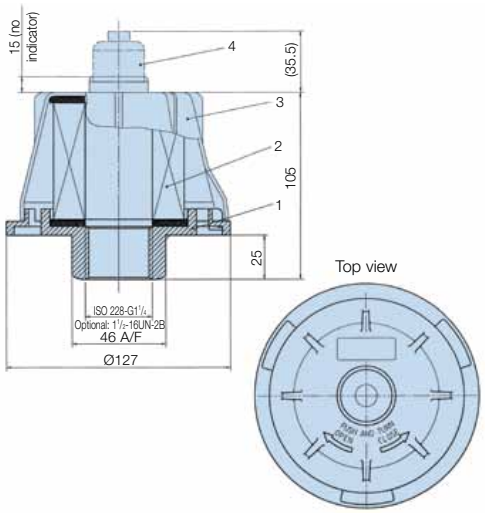

ABL-2

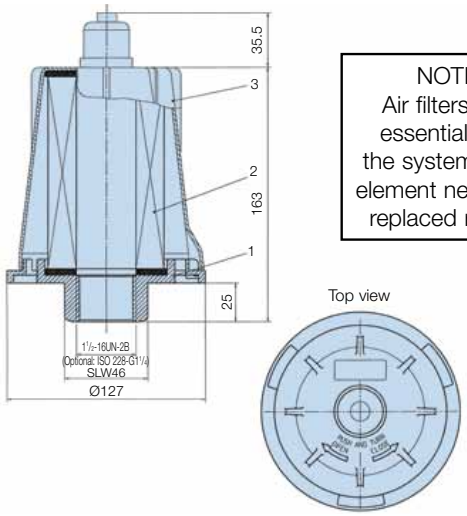

NOTICE!
Air filters are an essential part of the system and the element needs to be replaced regularly.

Extensions and filling mounting adaptors

Adaptor single

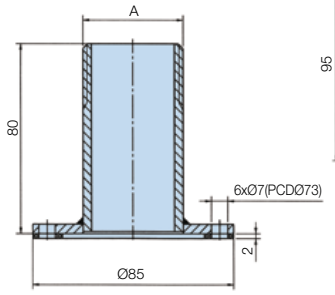

Adaptor with filler connection

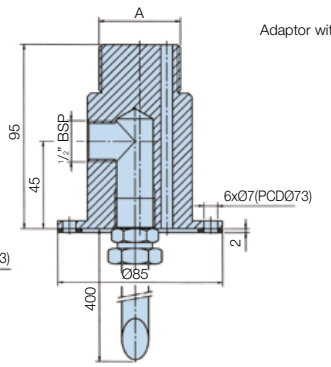

Tel: +45 63 12 83 00 | Email: ps@hymatik.com | www.hymatik.com | Hvidkaervej 27a, DK-5250 Odense SV, Denmark

Ordering Information

Standard products table

Part number	Supersedes	Replacement elements
ABL1G114QXWL3	ABL1-G1¹/₄-QXWL-3	**QXWL3**
ABL2G114QXWL13V	ABL2-G1¹/₄-QXWL-1-3-V	**QXWL13**
ABL2U112QXWL13V	ABL2-U1¹/₂-QXWL-1-3-V	**QXWL13**
ADAPTOR ABLG114FP	ADAPTOR-ABL-G1¹/₄-FP	-

Product configurator – Air Breather

Product number		Mounting options		Filtration (3µm)		Indicators		Options	
ABL1	1000 l/min	**G114**	ISO 228 - G1¹/₄ (BSP)	**QXWL3**	ABL1 Only		None		None
ABL2	2000 l/min	**U112**	1¹/₂ UN-16-2B	**QXWL13**	ABL2 Only	**V**	Visual	SNG	Single adaptor
								FP	Adaptor With Filler Connection

Product configurator – Adaptor

Product number	Mounting options		Options	
Adaptor ABL	**G114**	ISO 228 - G1¹/₄ (BSP)	**SNG**	Single Adaptor
			FP	Adaptor With Filler Connection

Replacement elements

Part number	Supersedes	Description
QXWL3	QXWL-3	3µ
QXWL13	QXWL1-3	3µ

Note 1: Part numbers featured with bold highlighted codes will ensure a 'standard' product selection.
Note 2: Alternate displayed part number selection will require you to contact Parker Filtration for availability.

Tel: +45 63 12 83 00 | Email: ps@hymatik.com | www.hymatik.com | Hvidkaervej 27a, DK-5250 Odense SV, Denmark

Triceptor

Desiccant Type Breather



Keeping water and dust out of the reservoir

A disposable air breather solution

Triceptor desiccant type breathers are easy to fit and disposable as soon as the silica gel inside turns to pink. Triceptor breathers have three main functions; besides the removal of small solid contamination they absorb water due to the high performance silica gel desiccant. The third function is to reduce oil mist leaving the reservoir and going into the atmosphere.



Contact Information:

Parker Hannifin
Hydraulic Filter Division Europe

European Product Information Centre
Freephone: 00800 27 27 5374
(from AT, BE, CH, CZ, DE, EE, ES, FI, FR, IE, IT, PT, SE, SK, UK)
filtrationinfo@parker.com

www.parker.com/hfde

Product Features:

- Triceptor desiccant type breathers remove contamination, absorb water in the fluid and reduce oil mist leaving the reservoir into the atmosphere.
- Triceptor breathers are easy to fit and disposable when the silica gel turns to pink.
- Cost effective Triceptor breathers are suitable for a wide range of mobile and industrial applications.

Breathers Desiccant Type

Reservoir Equipment

Specification

Materials:
Casing: Clarified copolymer polypropylene.
Cap: Copolymer polypropylene.
Stand pipe: PVC.

Filtration Element: Polyester, silica gel.

Operating Temperatures: -29°C (- 20°F) to 121°C (250°F).

Seals: None.

Maximum Allowable Operating Pressure (MAOP): .34 bar (5 psi).

Particle Removal Efficiency:
98.7% (beta 75) @ 3 micron
99.5% (beta 200) @ 4 micron
99.9% (beta 1000) @ 5.3 micron

Weight:

934330T	.57 kg (1.25 lbs.) each.
934331T	.79 kg (1.75 lbs.) each.
934332T	1.02 kg (2.25 lbs.) each.

Features

Foam Pads
Isolates the removal materials from contact with heavy reservoir mist and securely holds materials in place.

Filter Pads
Specially designed filter pads remove solid particulate on upstream side and then regenerate by releasing those particles when air flow reverses direction. Lower pad removes airborne contamination and second pad protects against any migration of desiccant.

Air Intakes
A total of eight air intakes may be exposed to allow air to freely flow in and out of the Triceptor.

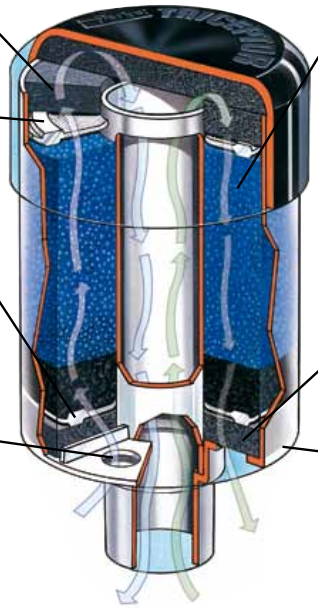

Silica Gel Desiccant
Has the highest removal capability by volume of any adsorption method. Indicates condition by changing color.

Foam pad
Insures filter pad is properly positioned and protects it from external damage.

Molded Housing
Durable shock absorbing casing provides reliable service and simple press in mounting.

Triceptor

Desiccant Type Breather

Installation

Triceptor breathers are designed for simple installation on most equipment, regardless of mounting connection. Since TriCeptor breathers are disposable, the threaded connection allows for quick and easy maintenance. Several mounting adapters (shown below) are available to provide the desired mounting. The installation/replacement process consists of four easy steps:

1. Remove from protective plastic wrap.
2. Remove 25mm blue cap from standpipe.
3. Remove foil label to expose the necessary amount of air intake holes.
4. Twist Triceptor into mounting adapter.

Servicing the Triceptor breather is also very easy. When the silica gel changes colour from blue to a pink, the breather is no longer active and needs to be replaced. Simply remove the unit and discard properly.

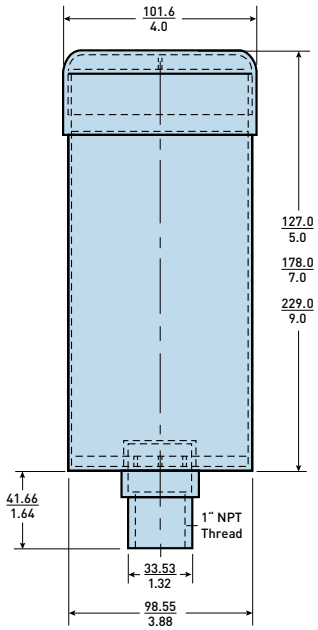

Note: Triceptor breathers comply with European REACH regulations

Linear Measurement= mm / in

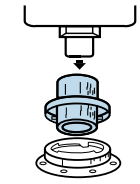

Flange Adapter

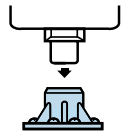

Field Adapter

Air Flow Performance

The curves below show the air flow performance of the three Triceptor breathers. To insure the longest life possible, the initial clean pressure drop should not exceed 0.103 bar.

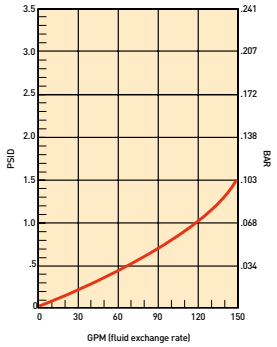

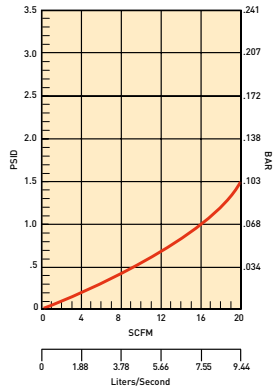

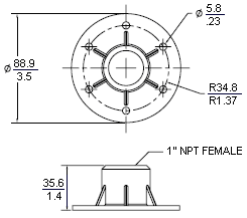

Model	Part Number	Quantity
127mm Breather	934330T	6 pcs.
178mm Breather	934331T	6 pcs.
229mm Breather	934332T	6 pcs.
Field Adapter Nylon	937546	1 pc.
Flange Adapter	937463	1 pc.

Glass-Filled Nylon and Metal Breathers

IP65 Rated, Metal, Screw-on and Lockables

Reservoir Equipment



Compact and lightweight reservoir solutions

IP65 Co-polymer breathers and metal breathers

The IP65 rated range of moulded, non-corrodible, glass-filled nylon air breathers combine strength with a lightweight design. Single hole, 6-hole, 3-hole and screw-on options are available; plus metal air breather, filler breather and lockable options are a proven range of quality reservoir solutions.



Contact Information:

Parker Hannifin
Hydraulic Filter Division Europe

European Product Information Centre
Freephone: 00800 27 27 5374
(from AT, BE, CH, CZ, DE, EE, ES, FI, FR, IE, IT, PT, SE, SK, UK)
filtrationinfo@parker.com

www.parker.com/hfde

Product Features:

- Moulded in non-corrodible, glass-filled nylon – strong and light.
- Single hole, 6 hole and 3 hole installation.
- Screw-on breather range – G½ and G¾ options.
- Compact range – G¼, G⅜, R½ and R¾ options.
- Metal filler breathers – pressurized threaded type.
- Metal filler breathers – unpressurized threaded type.
- Filter flange type.
- Lockable range for reservoir security and oil protection.

Tel: +45 63 12 83 00 | Email: ps@hymatik.com | www.hymatik.com | Hvidkaervej 27a, DK-5250 Odense SV, Denmark

IP65 Rated Filler Breathers

Reservoir Equipment

Specification for Single and 6 Hole Installation



Option 1

Construction:
Moulded in non-corrodible glass-filled nylon combining strength with a lightweight design.

Options:
(1) single (63mm dia) hole
Filler breather installation that eliminates drilled and tapped holes using self-locking clamps.
(2) 6 hole
Filler Breather Installation that uses 6 x No 10 thread forming screws.
(3) 3 hole filler breather
utilises 3 x zinc and clear chromate plated steel screws.

Strainers:
Unique design diffuses oil flow into the reservoir.
(1) Single length in polypropylene (95mm length)
(2) 2-piece telescopic in polypropylene (195mm length max.)

Filtration element:
Expanded polyurethane foam, 10 micron Absolute.

Seals:
Nitrile.

Working temperature:
-30°C to +90°C.

Pressurised filler breathers:
Available in 3 pressure options to maintain a positive pressure in a reservoir.

Pressurisation options:
0.2, 0.35 and 0.7 bar crack pressure.

Pressurisation valve:
Nylon/Nitrile.

Dipstick:
Available for use with options 1 and 2. Dipsticks are available in 2 lengths and in packs of 10.

Dipstick material:
ABS.

Hi/Lo indicators:
Acetal. Adjustable Red/Green level indicators.

Dipstick lengths:
200mm and 400mm.

Breather weight:
0.2Kg.

Anti-splash feature:
The unique design anti-splash feature is standard on all options 1 and 2 and allows for a dipstick to be fitted if required.

Option 1 Filler Breathers (Single Hole Installation)

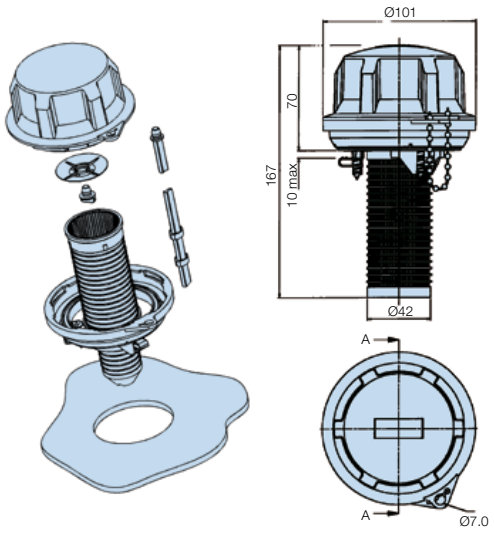

AB98XXX Pressurised Pressure Drop Curves

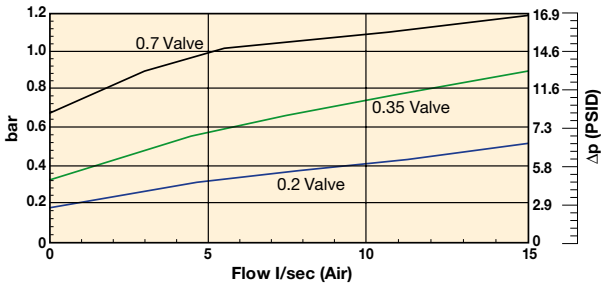

AB98XXX Non-Pressurised Pressure Drop Curves

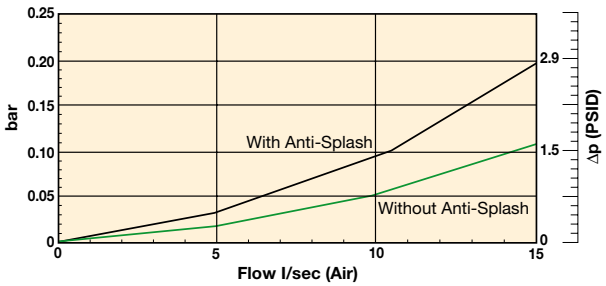

Option 1. Single Hole Filler Breathers – Pressurised

Part number	Supersedes	Description 10µ abs.
AB98212011	AB.98212011.UC	Pressurised 0.2bar with 95mm strainer
AB98213011	AB.98213011.UC	Pressurised 0.35bar with 95mm strainer
AB98212001	AB.98212001.UC	Pressurised 0.2bar without strainer
AB98212021	AB.98212021.UC	Pressurised 0.2bar with telescopic strainer
AB98213001	AB.98213001.UC	Pressurised 0.35bar without strainer
AB98213021	AB.98213021.UC	Pressurised 0.35bar with telescopic strainer
AB98217001	AB.98217001.UC	Pressurised 0.7bar without strainer
AB98217011	AB.98217011.UC	Pressurised 0.7bar with 95mm strainer
AB98217021	AB.98217021.UC	Pressurised 0.7bar with telescopic strainer

Note 1: Part numbers featured with bold highlighted codes will ensure a 'standard' product selection.
Note 2: Alternate displayed part number selection will require you to contact Parker Filtration for availability.

Option 1. Single Hole Filler Breathers – Non-Pressurised

Part number	Supersedes	Description 10µ abs.
AB98210011	AB.98210011.UC	Filler breather with 95mm strainer
AB98210021	AB.98210021.UC	Filler breather with telescopic strainer
AB98210001	AB.98210001.UC	Filler breather without strainer

Note 1: Part numbers featured with bold highlighted codes will ensure a 'standard' product selection.
Note 2: Alternate displayed part number selection will require you to contact Parker Filtration for availability.

Parker Hannifin
Hydraulic Filter Division Europe
FDHB500UK/Reservoir

Filler Breathers (6 Hole Installation)

Option 2

Note 1. Un-pressurised 6 hole fixing:

Form 6 off tank mounting holes between Ø4.0 and 4.4mm (dependent on the material and thickness – see guide below) equispaced on 70-73mm P.C.D. to suit supplied No.10 thread forming screws.

Note 2. Pressurised 6-hole fixing:

Form 6 off tank mounting holes between Ø4.0 and Ø4.4mm (dependent on the material and thickness – see guide below) equispaced on 73mm P.C.D. to suit supplied No.10 thread forming screws.

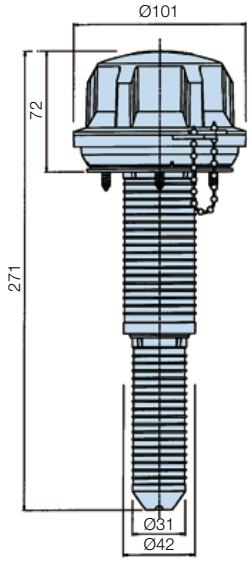

Telescopic Strainer

The telescopic strainer design is ideal, where reservoir depth allows, to increase the surface area of the strainer, improving still further its straining ability, oil flow-through and allowing for longer dipstick lengths.

Note 3. Reservoir mounting guide

Sheet thickness mm	Hole size mm
1.2	4.0
2.0	4.10
3.15	4.30
4.0	4.30
5.0	4.40

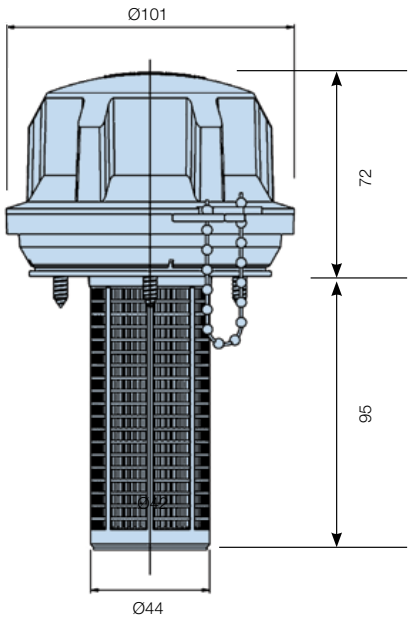

Option 2. 6 Hole Filler Breathers – Pressurised

Part number	Supersedes	Description 10µ abs
AB98817011	AB.98817011.UC	Pressurised 0.7bar with 95mm strainer
AB98812001	AB.98812001.UC	Pressurised 0.2bar without strainer
AB98812011	AB.98812011.UC	Pressurised 0.2bar with 95mm strainer
AB98812021	AB.98812021.UC	Pressurised 0.2bar with telescopic strainer
AB98813001	AB.98813001.UC	Pressurised 0.35bar without strainer
AB98813011	AB.98813011.UC	Pressurised 0.35bar with 95mm strainer
AB98813021	AB.98813021.UC	Pressurised 0.35bar with telescopic strainer
AB98817001	AB.98817001.UC	Pressurised 0.7bar without strainer
AB98817021	AB.98817021.UC	Pressurised 0.7bar with telescopic strainer

Note 1: Part numbers featured with bold highlighted codes will ensure a 'standard' product selection.
Note 2: Alternate displayed part number selection will require you to contact Parker Filtration for availability.

Option 2. 6 Hole Filler Breathers – Non-Pressurised

Part number	Supersedes	Description 10µ abs
AB98810001	AB.98810001.UC	Filler breather without strainer
AB98810011	AB.98810011.UC	Filler breather with 95mm strainer
AB98810021	AB.98810021.UC	Filler breather with telescopic strainer

Note 1: Part numbers featured with bold highlighted codes will ensure a 'standard' product selection.
Note 2: Alternate displayed part number selection will require you to contact Parker Filtration for availability.

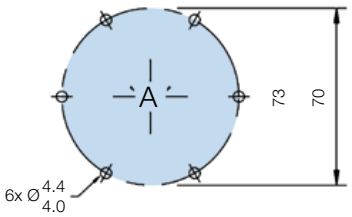

Tel: +45 63 12 83 00 | Email: ps@hymatik.com | www.hymatik.com | Hvidkaervej 27a, DK-5250 Odense SV, Denmark

Filler Breathers

Reservoir Equipment

Option 3 Filler Breathers (3 Hole Installation)



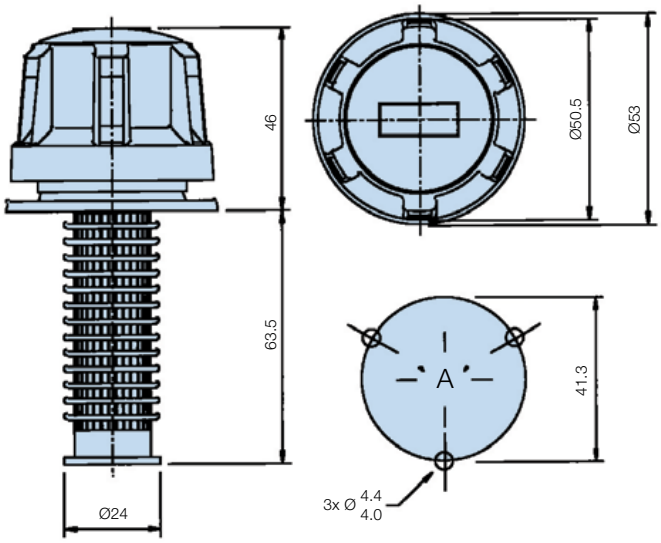

New Options Fully Tested

As part of the design development programme for the new IP65 Filler Breathers, extensive performance and endurance testing was carried out to ensure durability and efficiency.

Note: Form 3 off tank mounting holes between Ø4.0 and Ø4.4mm (dependent on the material and thickness – see chart for guide) equispaced on 41.3 P.C.D. to suit No. 10 thread forming screws supplied.

3-hole Filler Breathers (6-hole available)

Part number	Description 10µ abs
AB68110	Filler breather without strainer
AB68118	Filler breather with 95mm strainer

Note 1: Part numbers featured with bold highlighted codes will ensure a 'standard' product selection.
Note 2: Alternate displayed part number selection will require you to contact Parker Filtration for availability.
Note 3: Not suitable for use with B.68206/207
Note 4: 6-hole AB.68910/AB.68918 option available.

Dipstick Options

Dipstick Ordering

Part number	Supersedes	Description
B68206	DIP.206	10 x 200mm Dipsticks
B68207	DIP.207	10 x 400mm Dipsticks

Note 1: Part numbers featured with bold highlighted codes will ensure a 'standard' product selection.
Note 2: Alternate displayed part number selection will require you to contact Parker Filtration for availability.

Dipsticks

The dipstick, available in 2 lengths – 200mm and 400mm, can be cut to the required length or left as it is and the Hi/Lo indicators moved and positioned on the dipstick itself by squeezing the sides of the indicator and repositioning along the dipstick.

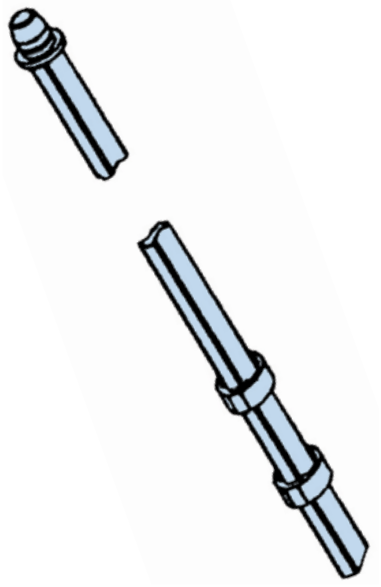

Tel: +45 63 12 83 00 | Email: ps@hymatik.com | www.hymatik.com | Hvidkaervej 27a, DK-5250 Odense SV, Denmark

Screw-On Type Air Breathers

Reservoir Equipment

Standard Screw-On Breathers - Specification



Option 1– G1/2 and G3/4 (Ø101)

Construction:
Moulded in non-corrodible glass-filled nylon combining strength with a lightweight design.

Option 1:
2 screw on type air breathers are available – G1/2 or G3/4 threaded base models.

Filtration element:
Expanded polyurethane foam, 10 micron absolute.

Seals:
Nitrile.

Working temperature:
-30°C to +90°C.

Pressurised air breathers:
Available in 3 pressure options to maintain a positive pressure in a reservoir.

Pressurisation options:
0.2, 0.35 and 0.7 bar crack pressure.

Pressurisation valve:
Nylon/Nitrile.

Dipstick:
Available for use with all options. Dipsticks are available in 2 lengths and in packs of 10.

Dipstick material:
ABS.

Hi/Lo indicators:
Acetal. Adjustable red/green level indicators.

Dipstick lengths:
200mm and 400mm.

Breather weight:
0.2Kg.

Anti-splash feature:
The unique design anti-splash feature is standard on option 1 and allows for a dipstick to be fitted if required.

Pressure Drop Flow Curve

AB98XXX Screw-on Non-Pressurised Pressure Drop Curves

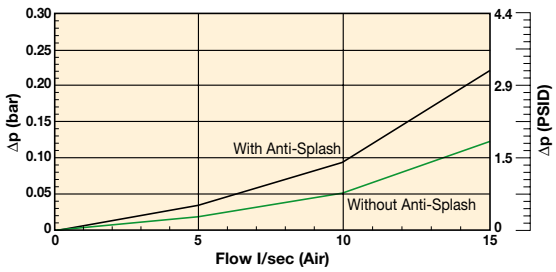

Note: For pressure drop information on the Option 1. Pressurised consult Parker Filtration.

Option 1 – G1/2 or G3/4

Part number	Supersedes	Description 10µ nom Abs.
AB98610101	AB.98610101.UC	G1/2 Un-pressurised
AB98612101	AB.98612101.UC	G1/2 pressurised 0.2 bar
AB98613101	AB.98613101.UC	G1/2 pressurised 0.35 bar
AB98617101	AB.98617101.UC	G1/2 pressurised 0.7 bar
AB98410101	AB.98410101.UC	G3/4 Un-pressurised
AB98412101	AB.98412101.UC	G3/4 pressurised 0.2 bar
AB98413101	AB.98413101.UC	G3/4 pressurised 0.35 bar
AB98417101	AB.98417101.UC	G3/4 pressurised 0.7 bar

Note 1: Part numbers featured with bold highlighted codes will ensure a 'standard' product selection.
Note 2: Alternate displayed part number selection will require you to contact Parker Filtration for availability.

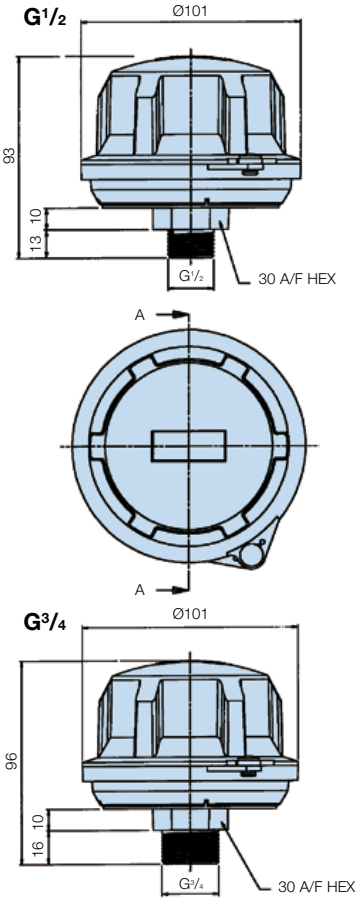

Parker Hannifin
Hydraulic Filter Division Europe
FDHB500UK/Reservoir

Tel: +45 63 12 83 00 | Email: ps@hymatik.com | www.hymatik.com | Hvidkaervej 27a, DK-5250 Odense SV, Denmark

Screw-On Type Air Breathers

Reservoir Equipment

Compact Screw-On Breathers - Specification

Option 2 – G1/4, G3/8, R1/2 and R3/4 (Ø40)

Construction:
G1/4, G3/8, R1/2 and R3/4 cap and base plate mouldings in nylon 66.

Element:
Expanded Polyurethane foam, 10 micron absolute.

Dipstick:
Available for use with R1/2 and R3/4.

Dipstick material:
ABS.

Hi/Lo indicators:
Acetal adjustable red/green level indicators.

Dipstick lengths:
200mm and 400mm (packs of 10).

Breather weights:
0.028Kg

Pressure Drop Flow Curve

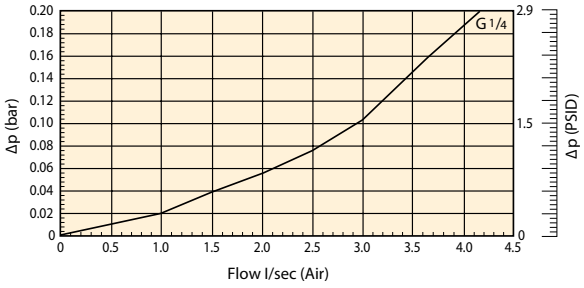

Note: For pressure drop information on G3/8, R1/2 and R3/4, consult Parker Filtration.

Ordering Information

Option 2 – G1/4, G3/8, R1/2 and R3/4 (Packs of 10 only)

Part number	Supersedes	Description 10µ abs
AB683101	AB.683101.UC	G1/4 Un-pressurised
AB68X101	AB.68X101.UC	G3/8 Un-pressurised
AB68Y101	AB.68Y101.UC	R1/2 Un-pressurised
AB68Z101	AB.68Z101.UC	R3/4 Un-pressurised

Note 1: Part numbers featured with bold highlighted codes will ensure a 'standard' product selection.
Note 2: Alternate displayed part number selection will require you to contact Parker Filtration for availability.

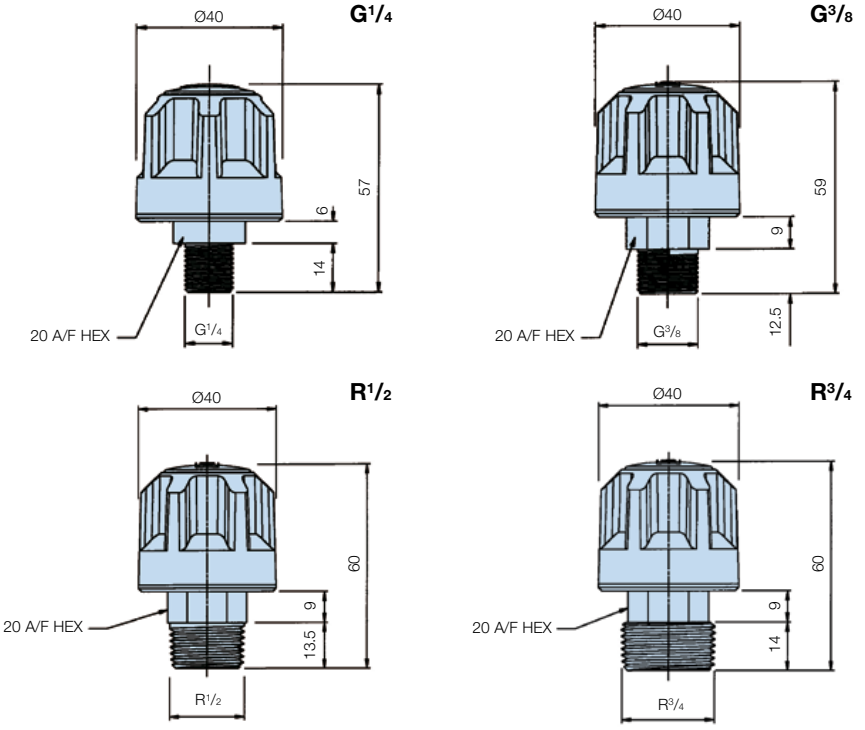

Parker Hannifin
Hydraulic Filter Division Europe
FDHB500UK/Reservoir

Screw-On Type Air Breathers - Specification

Option 3 – G3/8, G1/2 and G3/4 (Ø70)

Construction:
Mouldings in glass-filled nylon and glass coupled polypropylene.

Element:
Expanded Polyurethane foam, 10 micron absolute.

Seals:
Nitrile.

Pressurised air breathers:
Available G3/8, G1/2 and G3/4,
3 pressure options to maintain a positive pressure in a reservoir.

Pressurisation options:
0.2, 0.35 and 0.7 bar crack pressure.

Pressurisation valve:
Nylon.

Dipstick:
Available for use with G3/8, G1/2 and G3/4.

Dipstick material:
Mini-series in brass.

Hi/Lo indicators:
Acetal adjustable red/green level indicators.

Dipstick lengths:
200mm and 400mm (packs of 10).

Breather weights:
0.075Kg, Mini-series – 0.019Kg.

Pressure Drop Flow Curve

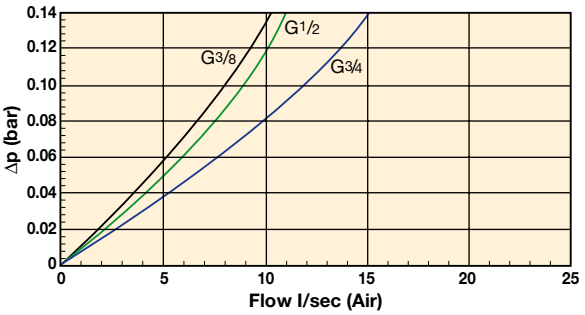

Ordering Information

Option 3 – G3/8, G1/2 and G3/4

Part number	Supersedes	Description 10µ abs
AB685101	SAB.5101	G3/8 Un-pressurised
AB687101	SAB.7101	G3/4 Un-pressurised
AB686101	SAB.6101	G1/2 Un-pressurised

Note 1: Part numbers featured with bold highlighted codes will ensure a 'standard' product selection.
Note 2: Alternate displayed part number selection will require you to contact Parker Filtration for availability.

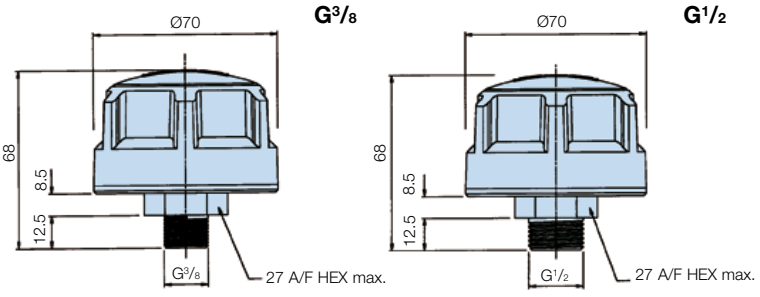

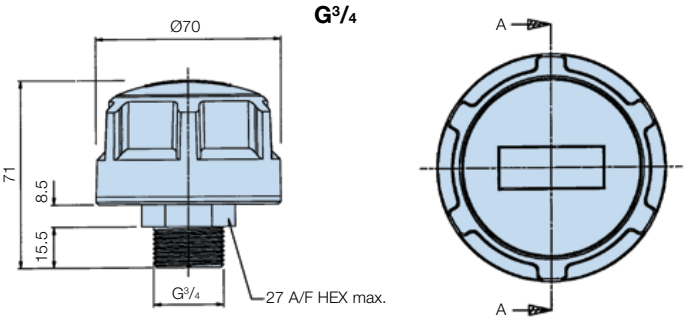

Tel: +45 63 12 83 00 | Email: ps@hymatik.com | www.hymatik.com | Hvidkaervej 27a, DK-5250 Odense SV, Denmark

Filler Breathers (Metal)

Reservoir Equipment

Metal Airbreather/Filler breather Specification



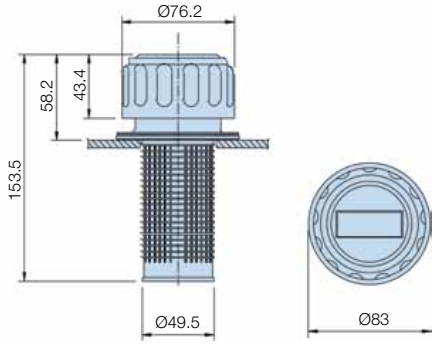

Locking lug option (5561)

For added security, certain Parker Filtration Metal Filler Breather Filters can be specified with a locking lug option.

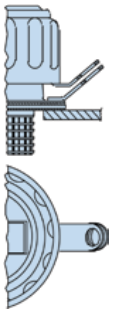

Note: Dimensions relate to 1163 and 1730 options.
Note: Max. operating temperature = +90°C.

Ordering Information

Standard products table

Part number	Supersedes	Replacement cap	Supersedes	Displacement l/min	Crack pressure	Micron rating	Air flow m³/min	Thread	Weight
Threaded airbreather (unpressurised)									
SAB156210	SAB.1562.10	N/A	N/A	430	N/A	10µ abs	0.45	G¾	0.20kg
SAB156310	SAB.1563.10	N/A	N/A	135	N/A	10µ abs	0.15	G¼	0.06kg
Filler breather - filter flange type (unpressurised)									
AB116310	AB.1163.10	CAP.116310	CAP.1163.10	430	N/A	10µ abs	0.45	N/A	0.24kg
AB138010	AB.1380.10	CAP.138010	CAP.1380.10	135	N/A	10µ abs	0.15	N/A	0.08kg
5561	N/A	N/A	N/A	430	N/A	10µ abs	0.45	N/A	0.24kg
Filler breather - filter flange type (pressurised)									
PAB1730105	PAB.1730.10.5	CAP.1730105	CAP.1730.10.5	430	0.35 bar	10µ abs	0.45	N/A	0.27kg
PAB17301010	PAB.1730.10.10	CAP.17301010	CAP.1730.10.10	430	0.70 bar	10µ abs	0.45	N/A	0.27kg
Air breather - threaded type (pressurised)									
SPA1731105	SPA.1731.10.5	N/A	N/A	430	0.35 bar	10µ abs	0.45	G¾	0.20kg
SPA17311010	SPA.1731.10.10	N/A	N/A	430	0.70 bar	10µ abs	0.45	G¾	0.20kg

Note 1: Part numbers featured with bold highlighted codes will ensure a 'standard' product selection.
Note 2: Alternate displayed part number selection will require you to contact Parker Filtration for availability.

1731 - (Pressurised) - 1562 (Un-pressurised) - Threaded type

Displacement:
430 l/min.

Micron rating:
10µ abs

Air flow:
0.45m³/min.

Weight:
0.2 Kg.

Thread:
G¾.

Valve crack-pressure 1731:
0.35 and
0.7 bar.

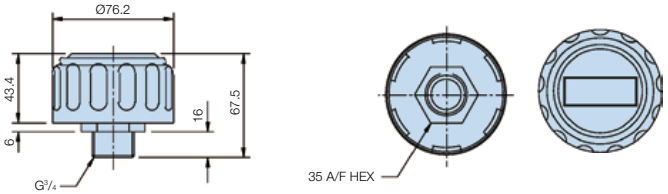

1563 - Threaded type (Un-pressurised)

Displacement:
1562 = 430 l/min.
1563 = 135 l/min.

Micron rating:
10µ abs

Air flow:
1562 = 0.45m³/min.
1563 = 0.15m³/min.

Weight:
1562 = 0.20 Kg.
1563 = 0.06 Kg.

Thread:
1562 = G¾.
1563 = G¼.

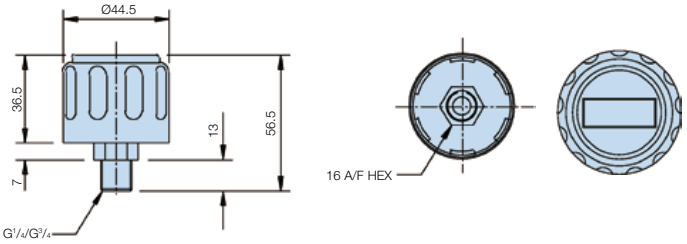

1380 - Filter flange type

Displacement:
135 l/min.

Micron rating:
10µ abs

Air flow:
0.15m³/min.

Weight:
0.08 Kg.

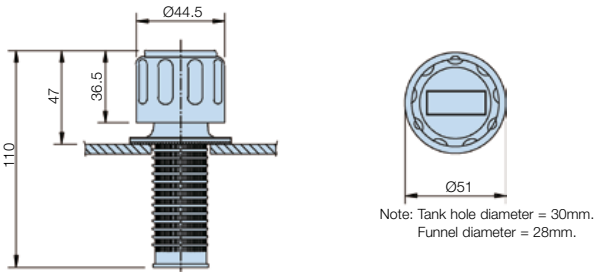

Note: Tank hole diameter = 30mm.
Funnel diameter = 28mm.

Tank installation notes

1. Un-pressurised 6 hole fixing (Type 1163)
Form off tank mounting holes between Ø4.0 and Ø4.4 (dependant on the material and thickness, consult Parker Filtration) equispaced on 70.0-73.0 P.C.D. to suit No. 10 thread forming screws supplied.

2. Pressurised 6 hole fixing (Type 1730)
Form 6 off mounting holes between Ø4.0 and Ø4.4 equispaced on 73.0 P.C.D. to suit
No. 10 thread forming screws supplied.

3. Un-pressurised 3 hole fixing (Type 1380)
Form 3 off tank mounting holes between Ø5.25 – 5.35 mm equispaced on 41.3 P.C.D. to suit
No. 10 thread forming screws supplied.

Breather Units

Small Breather Specification

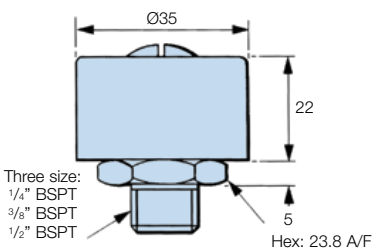

Ordering Information

Part number	Supersedes	Description
H00279001	H00279-001	Small breather ¼ BSPT thread
H00279002	H00279-002	Small breather ⅜ BSPT thread
H00279003	H00279-003	Small breather ½ BSPT thread

Tel: +45 63 12 83 00 | Email: ps@hymatik.com | www.hymatik.com | Hvidkaervej 27a, DK-5250 Odense SV, Denmark

Lockable Filler Breather

Reservoir Equipment

Installation Details



Tank Mounting

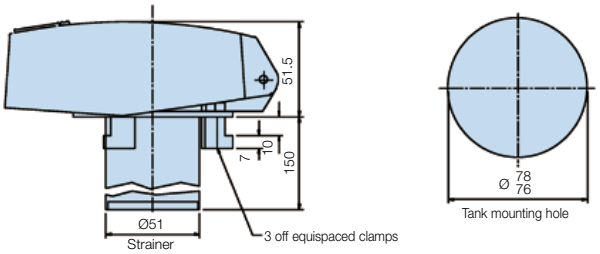

Stand Pipe Mounting

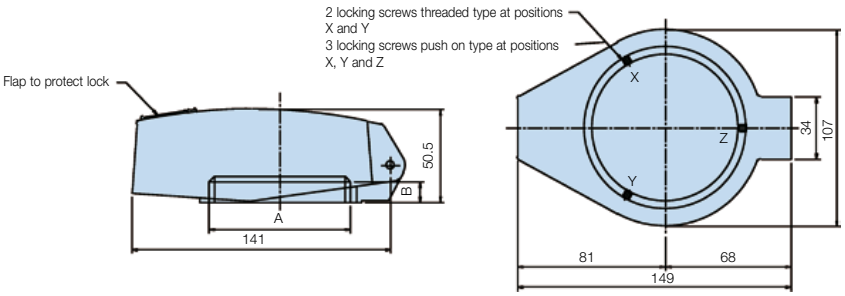

Lockable Filler Breather Selection

Total assembly pressure drop flow curve – 10µ elements

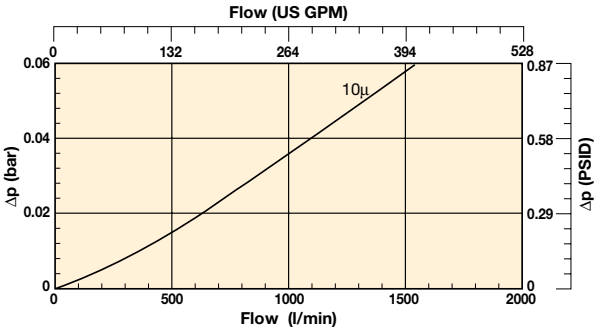

Ordering Information

Part number	Description
LFC622142	Non-breathing (No element) Clamp mounting with strainer
LFC622212	10µ nom element, G2 thread with strainer
LFC622242	10µ nom element, clamp mounting with strainer
LFC622432	10µ nom vented (air in) push on mounting with strainer
LFC622122	Non-breathing (No element) 2½" BSP thread with strainer
LFC622222	10µ nom element, G2½ thread with strainer
LFC622411	10µ nom vented (air in) G2 thread without strainer

Note 1: Part numbers featured with bold highlighted codes will ensure a 'standard' product selection.
Note 2: Alternate displayed part number selection will require you to contact Parker Filtration for availability.

Spin-On Air Breathers

Reservoir Equipment



High capacity air breathers

Ideal for high flow heavy contamination systems

Spin-on air filters for tank mounted breathing solutions offer high capacity, disposable air breathers to remove airborne contamination. 2 x 5 micron models are available – 700 l/min and 1500 l/min ideal for high flow heavy contamination systems.



Contact Information:

Parker Hannifin
Hydraulic Filter Division Europe

European Product Information Centre
Freephone: 00800 27 27 5374
(from AT, BE, CH, CZ, DE, EE, ES, FI, FR, IE, IT, PT, SE, SK, UK)
filtrationinfo@parker.com

www.parker.com/hfde

Product Features:

- High capacity air breathers to remove airborne contamination.
- Disposable, 5 micron nominal quality elements.
- Models – 700, 1500, 1700 and 3000 l/min.
- Ideal for high flow heavy contamination systems.

Spin-On Air Breathers

Reservoir Equipment

Specification



- High capacity air breathers designed for the removal of airborne contamination in hydraulic systems to support environmental maintenance.
- Ideal for high flow systems and heavily contaminated environments.
- Disposable spin-on elements quickly and easily replaced.
- 5 micron nominal quality filtration elements.
- 2 models available – 700 l/min and 1500 l/min.
- Available with a pressurised valve in the mounting adaptor.

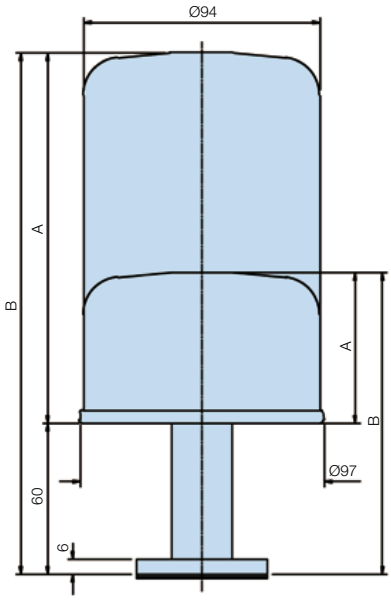

Standard spin-on air breather stem

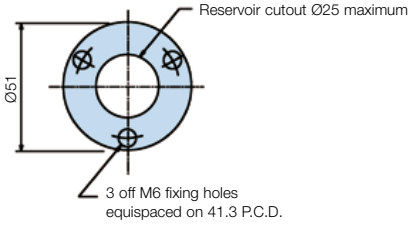



Circuit symbol
(standard)

Pressurised spin-on air breather stem

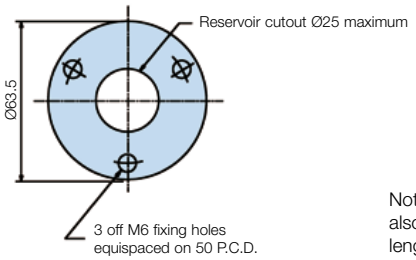

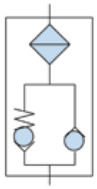

Circuit symbol
(pressurised)

Note: Spin-on air breather elements can also be mounted directly on to any suitable length of 3/4" BSP threaded pipe.

Ordering Information

5µ Spin-on air breathers

Part number	Supersedes	Air flow	Valve crack pressure	A mm	B mm	Weight	Replacement element
S340056	N/A	700 l/min	Unpressurised	60	120	0.6Kg	**4930**
S340052	N/A	1500 l/min	Unpressurised	148	208	0.75Kg	**588410**
S340058	*S.340058	700 l/min	0.35 Bar	60	120	0.69Kg	**4930**
S340059	**S.340059	700 l/min	0.70 Bar	60	120	0.69Kg	**4930**
S340054	*S.340054	1500 l/min	0.35 Bar	148	208	0.8Kg	**588410**
S340055	**S.340055	1500 l/min	0.70 Bar	148	208	0.8Kg	**588410**

Note 1: Part numbers featured with bold highlighted codes will ensure a 'standard' product selection.
Note 2: Alternate displayed part number selection will require you to contact Parker Filtration for availability.
Note 3: Reservoir must be capable of withstanding pressurisation.



Mounting face for standard and large breather

- High capacity air breathers and filler/breathers designed for the removal of airborne contamination in hydraulic systems to support environmental maintenance.
- Ideal for high flow systems and heavily contaminated environments.
- Disposable spin-on elements quickly and easily replaced.
- 3 micron absolute quality filtration elements.
- Models available – 1700 l/min and 3000 l/min.

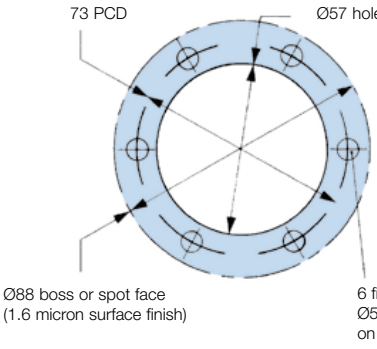

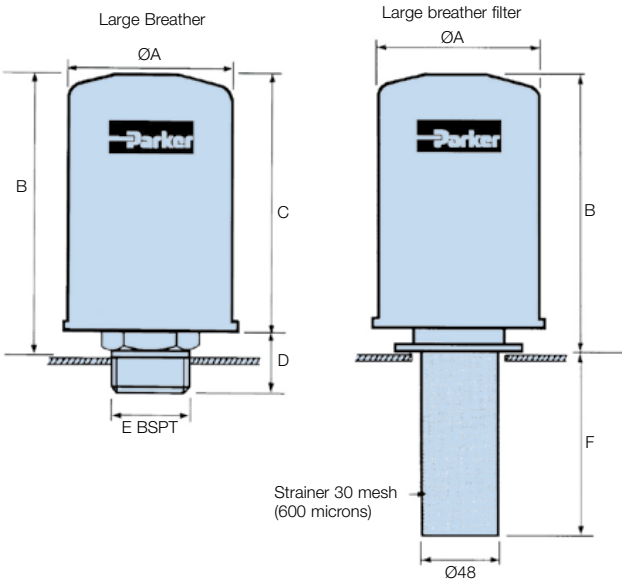

Specification

Maximum operating temperature:
-20°C to +90°C.

Construction materials:
Epoxy coated steel components to resist corrosion. resistant paint finish on large breathers.

Fluid compatibility:
Suitable for use with mineral oils and water oil emulsions.

Weights:
Large: H00834001 1.0 Kg
H00834002 1.65 Kg
H00834003 1.90 Kg
Each breather filler is supplied with mounting gaskets and self-tapping screws.

Ordering Information

Large breather dimensions

Part number	Supersedes	Air flow l/min	Dimensions (mm)				Ports
			A	B	C	D	E
H00834004	H00834-004	1700	97	147	135	30	¾
H00834005	H00834-005	3000	134	198	180	36	1¼

Note 1: Part numbers featured with bold highlighted codes will ensure a 'standard' product selection.
Note 2: Alternate displayed part number selection will require you to contact Parker Filtration for availability.

Large breather filler dimensions

Part number	Supersedes	Air flow l/min	Dimensions (mm)			Replacement element complete with bayonet	Supersedes
			A	B	F		
H00834001	H00834-001	1700	97	165	114	H00834006	H00834-006
H00834002	H00834-002	3000	134	204	114	H00834007	H00834-007
H00834003	H00834-003	3000	134	204	203	H00834007	H00834-007

Tel: +45 63 12 83 00 | Email: ps@hymatik.com | www.hymatik.com | Hvidkaervej 27a, DK-5250 Odense SV, Denmark

Fluid Level Measurement
Fluid Level/Temperature Gauges
Reservoir Equipment



A proven solution for tank oil level measurement

Universal fixing designed for front or rear tank mounting

Fluid level/temperature gauges are available in 3 sizes each with 2-hole mounting at 76mm, 127mm and 254mm mounting centres. The high-visibility viewing lens is a one-piece design for added security, moulded in shatterproof, transparent polyamide.



Contact Information:

Parker Hannifin
Hydraulic Filter Division Europe

European Product Information Centre
Freephone: 00800 27 27 5374
(from AT, BE, CH, CZ, DE, EE, ES, FI, FR, IE, IT, PT, SE, SK, UK)
filtrationinfo@parker.com

www.parker.com/hfde

Product Features:

- 3 sizes of fluid level/temperature gauge. 2 hole mounting.
- 76mm, 127mm and 254mm mounting centres.
- A one-piece design, high-visibility viewing lens for added security.
- Moulded in shatterproof, transparent polyamide.

Specification



Construction:
Lens Transparent polyamide.
Lens base Nylon 66.
Shroud High impact polystyrene. No aluminium content.

Bolts:
Steel.

Seals:
Nitrile.

Maximum working pressure:
1 bar.

Working temperature:
-30°C to +90°C.

Fluid compatibility:
Mineral and petroleum based oils.

Note:
A 500mm model with metal shroud finished in black available.

Recommended bolt tightening torque:
10 Nm maximum.

Thermometer scale range:
+30°C to +90°C.

Temperature Indicator:
Blue alcohol.

Note:
1. Locate seals in mounting recess before fitting.
2. Select the size required by studying the installation details to determine a part number.

Size 1 Installation Details

For 'through hole' mounting:

	–Thread–	
Hole size	M10	M12
Preferred	11.0	13.0
Maximum	13.0	14.0
	Torque = 10Nm max	

For tapped holes:

Holes to be tapped square to mounting face.
Tolerance on hole centres: +0.5
-0.2

For welded back nuts:

The above details should be combined.

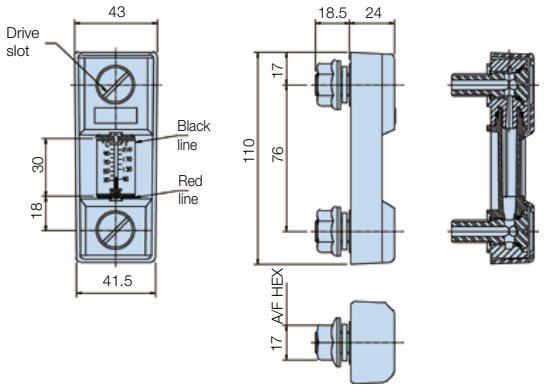

Installation and Application Information

Simple to Install

The universal fixing is designed for either front or rear fixing. Just two holes in the tank – threaded for front fixing – and the gauge is ready to install. After positioning the gauge the bolts are simply tightened to provide a secure seal. There is no fear of leakage with the square section seals and the two-point mounting system eliminates problems with tank distortion. M10 and M12 bolt thread options are available.

Easy to Read

The high-visibility lens is one-piece for added security and moulded in shatterproof, transparent polyamide for an accurate and clear oil level and temperature indication. Further gauge protection is provided by a specially designed shroud moulded in high-impact, black polystyrene.

Size 1 Ordering Information

Standard products table

Part number	Supersedes	Desciption	Centres	Thread	Max temp	Weight
FL69121	FLT.121	Fluid level/temp	76mm	M10	90°C	0.13Kg
FL69123	FLT.123	Fluid level/temp	76mm	M12	90°C	0.13Kg
FL69111	FL.111	Fluid level	76mm	M10	90°C	0.13Kg
FL69113	FL.113	Fluid level	76mm	M12	90°C	0.13Kg

Note 1: Part numbers featured with bold highlighted codes will ensure a 'standard' product selection.
Note 2: Alternate displayed part number selection will require you to contact Parker Filtration for availability.

Tel: +45 63 12 83 00 | Email: ps@hymatik.com | www.hymatik.com | Hvidkaervej 27a, DK-5250 Odense SV, Denmark

Fluid Level/Temperature Gauges

Reservoir Equipment

Size 2 Installation Details

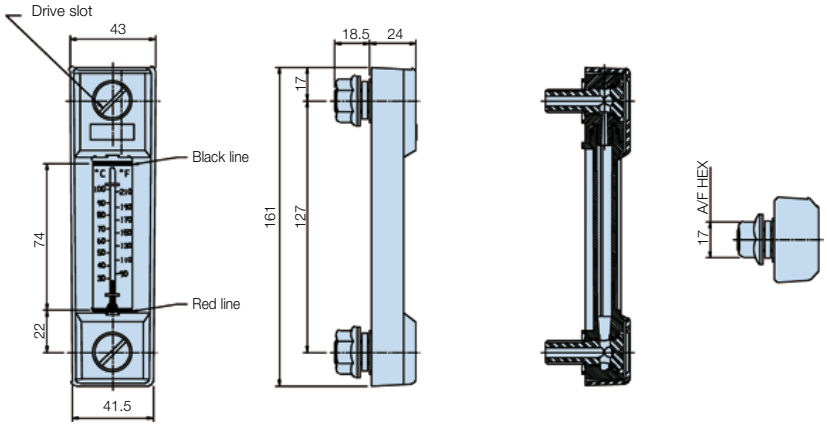

Size 2 Ordering Information

Standard products table

Part number	Supersedes	Desciption	Centres	Thread	Max temp	Weight
FL69221	FLT.221	Fluid level/temp	127mm	M10	90°C	0.15Kg
FL69223	FLT.223	Fluid level/temp	127mm	M12	90°C	0.15Kg
FL69211	FL.211	Fluid level	127mm	M10	90°C	0.15Kg
FL69213	FL.213	Fluid level	127mm	M12	90°C	0.15Kg

Note 1: Part numbers featured with bold highlighted codes will ensure a 'standard' product selection.
Note 2: Alternate displayed part number selection will require you to contact Parker Filtration for availability.

Size 3 Installation Details

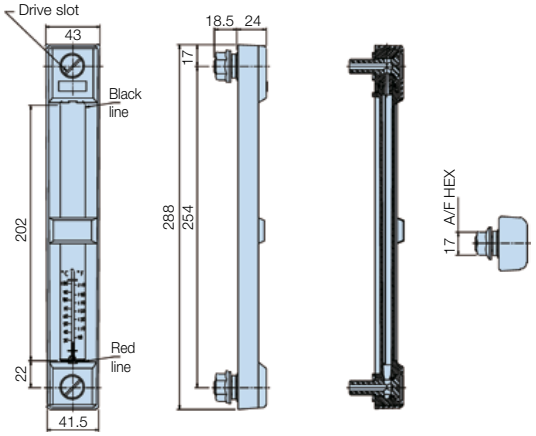

Size 3 Ordering Information

Standard products table

Part number	Supersedes	Desciption	Centres	Thread	Max temp	Weight
FL69321	FLT.321	Fluid level/temp	254mm	M10	90°C	0.23Kg
FL69323	FLT.323	Fluid level/temp	254mm	M12	90°C	0.23Kg
FL69311	FL.311	Fluid level	254mm	M10	90°C	0.23Kg
FL69313	FL.313	Fluid level	254mm	M12	90°C	0.23Kg

Note 1: Part numbers featured with bold highlighted codes will ensure a 'standard' product selection.
Note 2: Alternate displayed part number selection will require you to contact Parker Filtration for availability.

Reservoir Float & Level Switches

Reservoir Equipment



Cost effective reservoir solution

Float switches designed for on-site adjustment

A range of high quality, adjustable float switches. A reliable design using reed switches and available in 3 lengths – 500mm, 1000mm and 1500mm. additionally a capacitive level switch is available designed to detect the loss of fluid below its position in the tank.



Contact Information:

Parker Hannifin
Hydraulic Filter Division Europe

European Product Information Centre
Freephone: 00800 27 27 5374
(from AT, BE, CH, CZ, DE, EE, ES, FI, FR, IE, IT, PT, SE, SK, UK)
filtrationinfo@parker.com

www.parker.com/hfde

Product Features:

- Adjustable float switches – 3 lengths available.
- Capacitive level switch designed to give a low level alarm.
- High quality, adjustable float switches available in 3 lengths – 500mm, 1000mm and 1500mm.
- Capacitive level switch – rugged construction, simple to install and with no moving components.
- Cost effective reservoir solutions with many applications.

FL Series

Adjustable Float Switch
Reservoir Equipment

Features & Benefits



Float Switch Features Include:

- Float switches can be adjusted on site
- Reliable design using reed switches
- 3 lengths available, 500mm, 1000mm and 1500mm

The **FL Series** is a range of vertically mounted, single float level switches operating on the proven reed switch and magnet principle.

The **FL Series** float switch can be tailored by the user for a particular application, by adjusting the length of the float switch tube. It is also possible for the user to select the switching configuration by inverting the float, giving either open on rise or close on rise operation.

The unit is supplied part assembled, with detailed instructions for the user to complete assembly to the specifications of the application and to install the unit.

The **FL Series** is designed to be adjusted by the user to fit their tank. The unit consists of a stem with the reed switch and float already set in position. The customer can cut the stem to fit their tank, and assemble it to the header. The unit is then ready to be fitted to the tank.

The unit has a factory set “Open On Rise” switching configuration, but this can be changed by reversing the float.

Note: FL Series switches supplied as loose parts so no IP class applies. If assembled correctly by the customer, the IP class is IP67.

Typical Specification

Installation

Mounting:	1” BSP threaded header
Gasket:	2.0mm thick sealing washer
Length:	Adjustable up to 1500mm

Electrical specification

Supply voltage:	240 Vac maximum 300 Vdc maximum
Switching current:	0.5A

Material specification

Header:	Brass	Stem:	Brass
Float:	Polypropylene	Gasket:	Klingersil grade C4324 to BS7531 grade Y

Other parameters

Fluid types:	Any liquids compatible with brass and polypropylene

Installation Drawing

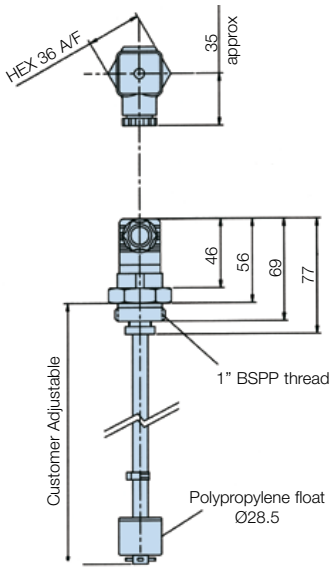

Ordering Information

Standard products table

Part number	Supersedes	Desciption
FL050010R	FL-0500-1-0R	500mm long float level switch
FL100010R	FL-1000-1-0R	1000mm long float level switch
FL150010R	FL-1500-1-0R	1500mm long float level switch

Note 1: Part numbers featured with bold highlighted codes will ensure a ‘standard’ product selection.
Note 2: Alternate displayed part number selection will require you to contact Parker Filtration for availability.

CLS46

Capacitive Level Switch
Reservoir Equipment

Features & Benefits



The **CLS46 Liquid Level Switch** is an active device which is designed to give an alarm signal if fluid falls below a preset level. It will only give an output signal after a few seconds of low level to eliminate false alarms due to turbulence. The fact that the **CLS46 Series** has no moving parts and incorporates a built in delay means that it is ideal in applications where mechanically operated switches mis-trigger due to vibration and fluid turbulence.

Features Include:

- Rugged construction
- Simple to install
- Delay circuitry prevents false alarms
- Purely electronic, no moving components
- Integrated test feature

The **CLS46 Capacitive Level Switch** is designed to detect the loss of fluid below its position in the tank.

The **CLS46 Series** has no moving parts and it is therefore suitable for all applications, particularly where space and access inside a vessel is at a minimum.

The **CLS46 Series** compliments the existing range of level measurement instrumentation supplied by Parker Hannifin.

Technical Specification

Dimensions: See drawing

Electrical rating:
Supply voltage: 7-40 Vdc
Max. load current: 1.0A
Supply current: 3.0mA
Alarm delay time: 10.0 seconds

Connections:
V+: Positive power supply
GND: Negative power supply or GND
Output: Transistor switched to GND on alarm
Test: Ground to operate
Body: Connected to ground

Fluid types:
Mineral oils, typically used in engines or hydraulic actuators compatible with brass, PTFE and NBR.

Construction:
Body: Brass
Probe: PTFE
Terminals: SAE CA210 brass, tin plated
Seals: NBR
Connector: 30% glass filled nylon 6

Environmental ratings
Max. pressure: 5.0 bar (72 PSI)
Temp. ranges: Fluid: -40°C to +130°C
Ambient: -40°C to +100°C
Storage: -50°C to +140°C
Sealing: IP67
Vibration: 6g 10-50Hz (600-3000rpm)
Shock: 50g, 6.3mS
Weight: 53g

Installation Details

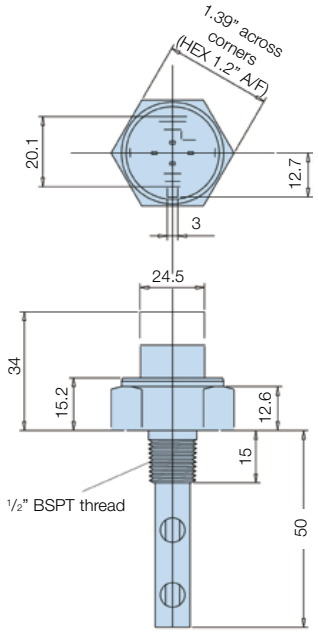

Ordering Information

Standard products table

Part number	Desciption
CLS46	Capacitive fluid level sensor
CLS46Connector	Capacitive fluid level sensor connector

Note 1: Part numbers featured with bold highlighted codes will ensure a 'standard' product selection.
Note 2: Alternate displayed part number selection will require you to contact Parker Filtration for availability.
Note 3: CLS46 does not include the connector.

Tel: +45 63 12 83 00 | Email: ps@hymatik.com | www.hymatik.com | Hvidkaervej 27a, DK-5250 Odense SV, Denmark

Suction Elements

Reservoir Equipment



Proven solutions for oil reservoir efficiency

A range of quality fluid power products for reservoir and system application

A high quality range of products designed to complete a reservoir installation including in-tank suction strainers and oil diffusers, metal and polyester in-line filters and drive couplings with nylon sleeve and sintered steel couplings.
Inline check valves, single station gauge isolator valve and 63mm/100mm pressure gauges are also available.



Contact Information:

Parker Hannifin
Hydraulic Filter Division Europe

European Product Information Centre
Freephone: 00800 27 27 5374
(from AT, BE, CH, CZ, DE, EE, ES, FI, FR, IE, IT, PT, SE, SK, UK)
filtrationinfo@parker.com

www.parker.com/hfde

Product Features:

- In-tank suction strainers and oil diffusers.
- Metal and polyester in-line filters and drive couplings.
- Inline check valves.
- Gauge isolator valves and 63mm/100mm pressure gauges.

Tel: +45 63 12 83 00 | Email: ps@hymatik.com | www.hymatik.com | Hvidkaervej 27a, DK-5250 Odense SV, Denmark

Suction Elements

Reservoir Equipment

Specification



Construction:
Stainless steel media 30% glass filled nylon head. Zintec centre tube. Polyurethane adhesives.

Maximum working temperature:
-30ºC to 90ºC.

Maximum clear element pressure drop:
0.03 bar.

Filtration media:
125 micron*.

Flow range:
15-500 l/min (for 30cst).

Bypass rating:
0.17 bar.

Mounting threads:
G1/2 up to G3.

* Non-standard elements are available to order. Consult Parker Filtration.

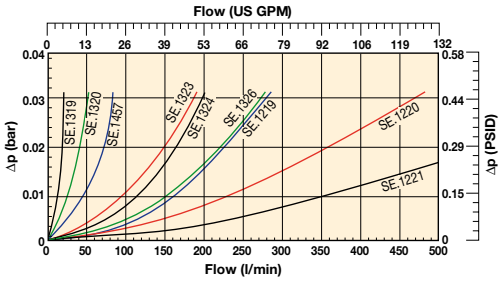

Installation - Suction Elements Without Bypass

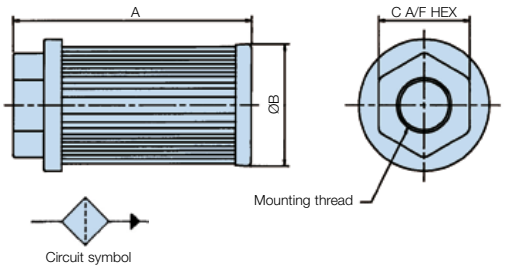

Installation - Suction Elements with Bypass

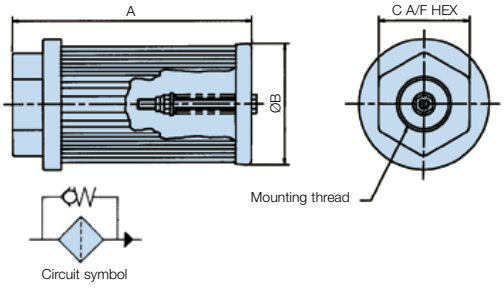

Ordering Information - Without Bypass

Standard products table

Part number	Supersedes	Flow l/min	Ports BSP	Micron rating	Dimensions (mm)			Weight	Bypass rating
					A	B	C		
SE75111110	SE.1319	15	1/2	125	105.5	46	36	0.08	N/A
SE75221110	SE.1320	25	3/4	125	109.5	64	46	0.15	N/A
SE75231210	SE.1457	50	1	125	139.5	64	55	0.17	N/A
SE75351210	SE.1323	95	1 1/2	125	140	86	65	0.28	N/A
SE75351310	SE.1324	130	1 1/2	125	200	86	65	0.33	N/A
SE75361410	SE.1326	180	2	125	260	86	75	0.40	N/A
SE75461210	SE.1219	225	2	125	150	150	70	0.64	N/A
SE75471310	SE.1220	350	2 1/2	125	212	150	90	0.72	N/A
SE75481410	SE.1221	500	3	125	272	150	100	0.92	N/A

Note 1: Part numbers featured with bold highlighted codes will ensure a 'standard' product selection.
Note 2: Alternate displayed part number selection will require you to contact Parker Filtration for availability.

Ordering Information - With Bypass

Standard products table

Part number	Supersedes	Flow l/min	Ports BSP	Micron rating	Dimensions (mm)			Weight	Bypass rating
					A	B	C		
SE75111111	SE.5100	15	1/2	125	105.5	46	36	0.08	0.17 bar
SE75221111	SE.5101	25	3/4	125	109.5	64	46	0.15	0.17 bar
SE75231211	SE.5102	50	1	125	139.5	64	55	0.17	0.17 bar
SE75351211	SE.5103	95	1 1/2	125	140	86	65	0.28	0.17 bar
SE75351311	SE.5104	130	1 1/2	125	200	86	65	0.33	0.17 bar
SE75361411	SE.5105	180	2	125	260	86	75	0.40	0.17 bar
SE75461211	SE.5106	225	2	125	150	150	70	0.64	0.17 bar
SE75471311	SE.5107	350	2 1/2	125	212	150	90	0.72	0.17 bar
SE75481411	SE.5108	500	3	125	272	150	100	0.92	0.17 bar

Note 1: Part numbers featured with bold highlighted codes will ensure a 'standard' product selection.
Note 2: Alternate displayed part number selection will require you to contact Parker Filtration for availability.

Diffusers

Reservoir Equipment

Installation Details



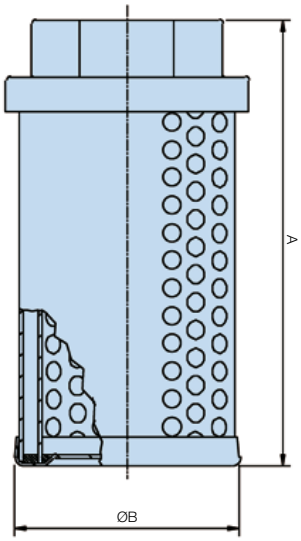

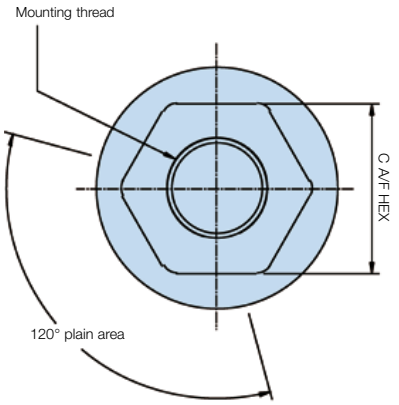

Specification

Construction:
Zintec body.
30% glass-filled nylon head.
Zintec end cap.
Polyurethane adhesives.

Flow range:
50 l/min up to 454 l/min (For 30cSt).

Mounting threads:
G3/4 up to G2.

Working Temperature:
-30°C to + 90°C

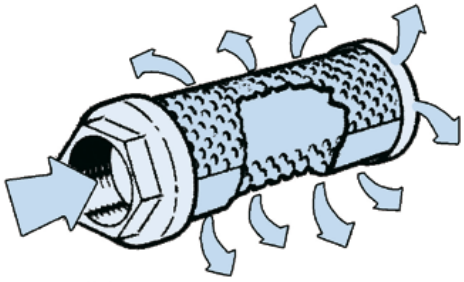

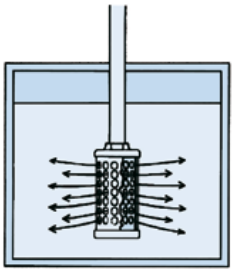

The effect of fitting a diffuser

Note: When installing a diffuser the plain area on the outside must be facing the pump inlet.
Note: For information relating to maximum differential pressure over the diffuser, consult Parker Filtration.

The benefits of specifying a Parker Filtration Diffuser

Installing a Parker Filtration Diffuser in a hydraulic reservoir is a simple operation that can make a big difference to system efficiency.

With its special concentric tubes designed with discharge holes 180° opposed fluid aeration, foaming and reservoir noise are reduced and pump life extended by reducing cavitation to the pump inlet.

Diffusers manufactured to customer specifications and other sizes of diffusers are available.

Ordering Information

Standard products table

Part number	Flow l/min	Ports BSP	Dimensions (mm)			Weight
			A	B	C	
2201	114	1	127	86	55	0.42
2202	227	1 1/2	178	86	65	0.56
2210	50	3/4	120	62	46	0.27
2203	454	2	242	86	75	0.69

Note 1: Part numbers featured with bold highlighted codes will ensure a 'standard' product selection.
Note 2: Alternate displayed part number selection will require you to contact Parker Filtration for availability.

Parker Hannifin
Hydraulic Filter Division Europe
FDHB500UK/Reservoir

Inline Filters

Reservoir Equipment

Metal Inline Filter - Specification



Construction:
Head – zinc.
Bowl – Aluminium
BS1470/1050A. 1987.

Element:
Zintec/Stainless steel.
125 micron*.

Max. flow:
90 l/min.

Max working pressure:
7 bar.

Thread:
G1.

Working temperature:
-30°C to +80°C.

Seal:
Nitrile.

Bowl tightening torque:
12 Nm.

Flow direction:
From outside to inside.

Weight:
1.5 Kg.

*Alternative media can be specified.

Installation Details

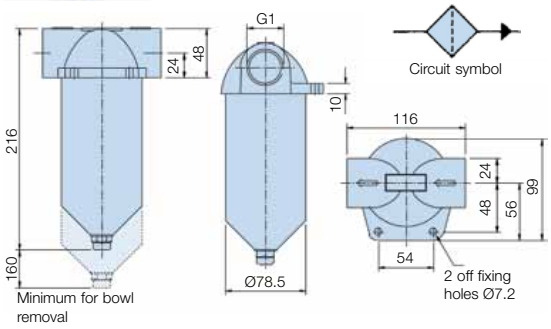

Filter Selection

Total assembly pressure drop flow curve
Oil Viscosity 30 cSt Relative density 0.856

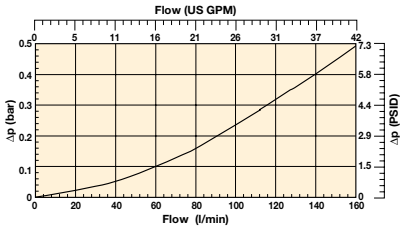

Ordering Information

Standard products table

Part number	Flow l/ min	Thread BSP	Micron rating	Replacement element	Supersedes
IL1115	90	G1	125	**EIL1115**	E.IL.1115

Note 1: Part numbers featured with bold highlighted codes will ensure a 'standard' product selection.
Note 2: Alternate displayed part number selection will require you to contact Parker Filtration for availability.

Non-Corrodible Inline Filter - Specification



Construction:
Housing and bowl moulded in polyester.

Element:
Stainless steel mesh.
125 micron*.

Max. flow:
120 l/min.

Max working pressure:
7 bar.

Thread:
G1.

*For alternative media consult Parker Filtration
Note: When using with water, protect from freezing.

Working temperature:
-30°C to +80°C.
(+60°C water).

Seal:
Nitrile.

Bowl tightening torque:
12 Nm.

Bowl tightening note:
A box or ring spanner is recommended.

Flow direction:
From outside to inside.

Weight:
0.5 Kg.

Installation Details

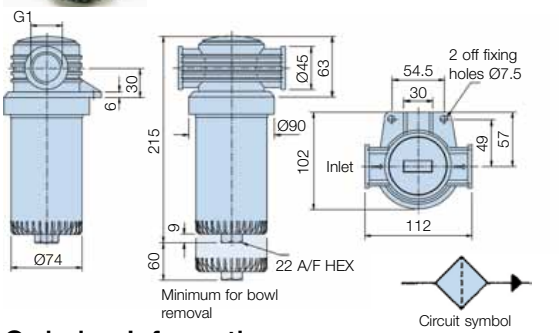

Total assembly pressure drop flow curve
Oil Viscosity 30 cSt Relative density 0.856

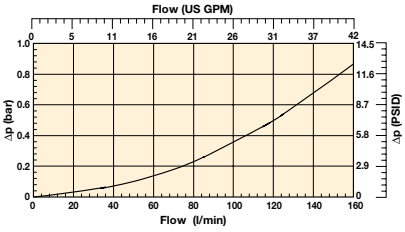

Ordering Information

Standard products table

Part number	Supersedes	Thread BSP	Appliance	Micron rating	Weight	Replacement element
IL761151	IL.1151	1	Oil	125	0.5	**R.76115**
IL761251	IL.1251	1	Water	125	0.5	**R.76125**

Note 1: Part numbers featured with bold highlighted codes will ensure a 'standard' product selection.
Note 2: Alternate displayed part number selection will require you to contact Parker Filtration for availability.

Parker Hannifin
Hydraulic Filter Division Europe
FDHB500UK/Reservoir

Tel: +45 63 12 83 00 | Email: ps@hymatik.com | www.hymatik.com | Hvidkaervej 27a, DK-5250 Odense SV, Denmark

Drive Couplings

Reservoir Equipment

Technical Data



Materials

Coupling halves
Sintered Steel

Sleeve
Nylon 66

Max temp sleeve
83°C

To select coupling model check application to establish running load condition.
Check chart for factor (F) and apply factor (F) to *Rating of coupling formulae. This answer you now apply to *Rating/100 rev/min below.
It is advisable always to check shaft sizes being used on application and check with dimension 'H'.

Application	Factor (F) Electric motor	Petrol/diesel engine
Uniform load	1.00	1.20
Medium shock	1.25	1.50
Heavy shock	1.75	2.00

$$\text{*Rating of coupling} = \frac{\text{HP of application x 100 x F}}{\text{rev/min of application}}$$

Installation Details

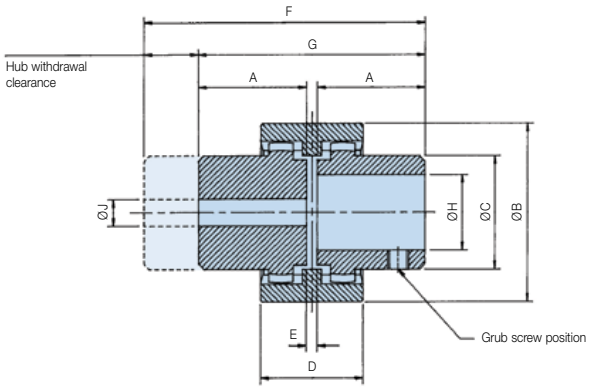

Sectioned detail

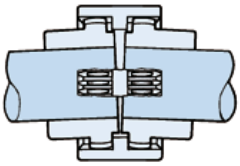

Part number prefix	Max speed rev/min	*Rating/ 100 rev/min kW	hp	Weight	A mm	B mm	C mm	D mm	E mm	F mm	G mm	max bore	–H– min bore	J pilot bore
DC28*	5000	0.75	1.00	0.4	40.0	66.0	44.5	38.0	4.0	104.0	84.0	28.0	10.0	7.5
DC42*	5000	1.32	1.75	0.75	42.0	90.0	60.0	42.0	4.0	115.0	88.0	42.0	14.0	10.5
DC55*	4000	6.00	8.00	2.05	59.0	125.0	83.0	65.0	4.0	158.0	122.0	55.0	19.0	16.0 min 38.1 max

Height of keyway from base of bore

	Metric	Imperial
Standard bore	BS 4500, (1985)	BS 1916, Part 1, (1985)
Standard keyway	BS 4325, Part 1 (1980)	BS 46, Part 1, (1985)

Assembly data
1. Maximum angular misalignment is ±2°. Maximum radial misalignment is ±0.4mm.
2. Ensure that the Parker Filtration drive coupling gear hubs are an easy fit to their respective shafts. Do not use heavy blows to force the hubs on.
3. When in position, the hubs should have a gap of 4mm as denoted by 'E' dimension.
4. Tighten grub screws to locate both gear hubs on to their respective shafts.

Ordering Examples

Parker Filtration drive coupling components are ordered separately. Here are three examples of complete assemblies ordered this way.

1. Complete assembly – **DC28M14B04K**
   Made up of a **DC28M14**
   DC28B04K
   DC28S (Sleeve)

Complete model **DC28** drive coupling: One gear hub has 14mm bore with 5mm wide keyway and other hub has a 1/2" bore with 0.125" wide keyway.
Both hubs supplied with locating grub screw.

2. Complete assembly – **DCR42PBPB**
   Made up of 2x **DCR42PB's**
   DC42S (Sleeve)

Complete model DC42 drive coupling: Both gear hubs have pilot bore of 10.5mm. Not supplied with grub screws.

3. Complete assembly – **DCR55PBB12K**
   Made up of a **DCR55PB**
   DC55B12K
   DC55S (Sleeve)

Complete model **DC55** drive coupling: One gear hub pilot bored 5/8", the other hub pilot bored 1 1/2". Latter only supplied with grub screw.

Tel: +45 63 12 83 00 | Email: ps@hymatik.com | www.hymatik.com | Hvidkaervej 27a, DK-5250 Odense SV, Denmark

Drive Couplings

Reservoir Equipment

Ordering Information

Model DC.28

Part number	Supersedes	Ø Bore (mm)	Keyway		Weight
			Width (mm)	Height (mm)	
DC28M16	DC.28.M16	16.0mm	5.0mm	18.4mm	Range from 0.259Kg to 0.411Kg
DC28M19	DC.28.M19	19.0mm	6.0mm	21.9mm	
DC28M20	DC.28.M20	20.0mm	6.0mm	22.9mm	
DC28M22	DC.28.M22	22.0mm	6.0mm	24.9mm	
DC28M24	DC.28.M24	24.0mm	8.0mm	27.5mm	
DC28M25	DC.28.M25	25.0mm	8.0mm	28.5mm	
DC28M28	DC.28.M28	28.0mm	8.0mm	31.5mm	
DCR28PB	DCR.28.PB	7.5mm	N/A	N/A	
DC28S	DC.28.S	N/A	N/A	N/A	
DC28M10	DC.28.M10	10.0mm	3.0mm	11.5mm	
DC28M11	DC.28.M11	11.0mm	4.0mm	12.9mm	
DC28M14	DC.28.M14	14.0mm	5.0mm	16.4mm	
DC28M18	DC.28.M18	18.0mm	6.0mm	20.9mm	
DC28B03K	DC.28.B03K	7/16	0.125 ins	0.50 ins	
DC28B04K	DC.28.B04K	1/2	0.125 ins	0.57 ins	
DC28B05K	DC.28.B05K	5/8	0.188 ins	0.72 ins	
DC28B06K	DC.28.B06K	3/4	0.188 ins	0.84 ins	
DC28B07K	DC.28.B07K	7/8	0.250 ins	0.99 ins	
DC28B08K	DC.28.B08K	1	0.250 ins	1.12 ins	
DC28B09K	DC.28.B09K	1 1/8	0.313 ins	1.24 ins	

Model DC.42

Part number	Supersedes	Ø Bore (mm)	Keyway		Weight
			Width (mm)	Height (mm)	
DC42M25	DC.42.M25	25.0mm	8.0mm	28.5mm	Range from 0.436Kg to 0.753Kg
DC42M28	DC.42.M28	28.0mm	8.0mm	31.5mm	
DC42M30	DC.42.M30	30.0mm	8.0mm	33.5mm	
DC42M35	DC.42.M35	35.0mm	10.0mm	38.5mm	
DC42M38	DC.42.M38	38.0mm	10.0mm	41.5mm	
DC42M42	DC.42.M42	42.0mm	12.0mm	45.5mm	
DCR42PB	DCR.42.PB	10.5mm	N/A	N/A	
DC42S	DC.42.S	N/A	N/A	N/A	
DC42M18	DC.42.M18	18.0mm	6.0mm	20.9mm	
DC42M19	DC.42.M19	19.0mm	6.0mm	21.9mm	
DC42M20	DC.42.M20	20.0mm	6.0mm	22.9mm	
DC42M22	DC.42.M22	22.0mm	6.0mm	24.9mm	
DC42M24	DC.42.M24	24.0mm	8.0mm	27.5mm	
DC42M32	DC.42.M32	32.0mm	10.0mm	35.5mm	
DC42B05K	DC.42.B05K	5/8	0.188 ins	0.72 ins	
DC42B06K	DC.42.B06K	3/4	0.188 ins	0.84 ins	
DC42B07K	DC.42.B07K	7/8	0.250 ins	0.99 ins	
DC42B08K	DC.42.B08K	1	0.250 ins	1.12 ins	
DC42B09K	DC.42.B09K	1 1/8	0.313 ins	1.24 ins	
DC42B10K	DC.42.B10K	1 1/4	0.313 ins	1.37 ins	
DC42B11K	DC.42.B11K	1 3/8	0.375 ins	1.49 ins	
DC42B12K	DC.42.B12K	1 1/2	0.375 ins	1.61 ins	
DC42B13K	DC.42.B13K	1 5/8	0.439 ins	1.76 ins	

Model DC.55

Part number	Supersedes	Ø Bore (mm)	Keyway		Weight
			Width (mm)	Height (mm)	
DCR55PB	DCR.55.PB	16.0mm	N/A	N/A	Range from 1.248 Kg – 2.046 Kg
DC55S	DC.55.S	N/A	N/A	N/A	
DC55M25	DC.55.M25	25.0mm	8.0mm	28.5mm	
DC55M30	DC.55.M30	30.0mm	8.0mm	33.5mm	
DC55M32	DC.55.M32	32.0mm	10.0mm	35.5mm	
DC55M35	DC.55.M35	35.0mm	10.0mm	38.5mm	
DC55M38	DC.55.M38	38.0mm	10.0mm	41.5mm	
DC55M42	DC.55.M42	42.0mm	12.0mm	45.5mm	
DC55M55	DC.55.M55	55.0mm	16.0mm	59.5mm	
DC55B10K	DC.55.B10K	1 1/4	0.313 ins	1.37 ins	
DC55B12K	DC.55.B12K	1 1/2	0.375 ins	1.61 ins	
DC55B15K	DC.55.B15K	1 7/8	0.501 ins	2.01 ins	
DC55B16K	DC.55.B16K	2	0.501 ins	2.13 ins	

Note 1: Part numbers featured with bold highlighted codes will ensure a 'standard' product selection.
Note 2: Alternate displayed part number selection will require you to contact Parker Filtration for availability.
Note 3:* Width and height apply to dimensions of the **Keyway**.

Tel: +45 63 12 83 00 | Email: ps@hymatik.com | www.hymatik.com | Hvidkaervej 27a, DK-5250 Odense SV, Denmark

Multiclamp

Pipe Clamp System



A 'fit for purpose' pipe clamping system

Leak free, noise free and vibration free pipe clamping

Multiclamp is a system of components, each one engineered to a high standard – that together build to provide effective, all-purpose pipe work clamping. Available as single clamp, double clamp, 12 or 16 hole Multiclamp, there is a complete range of split bushes to accept pipe or hose diameters from 6mm up to 50mm from 3 x Series of Multiclamp.

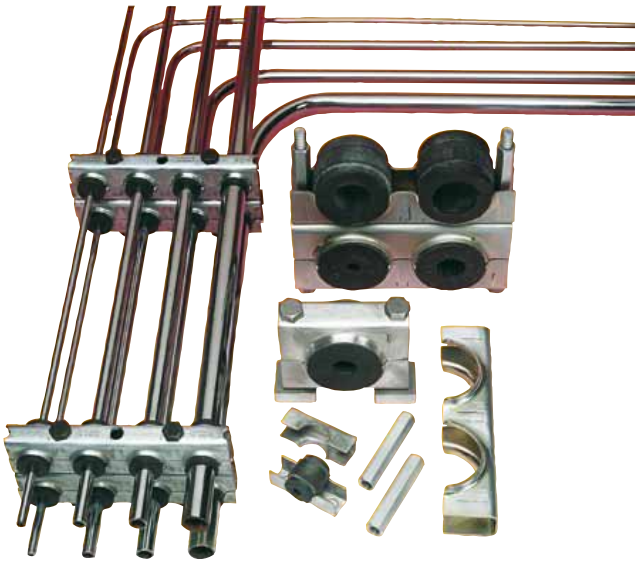

Contact Information:

Parker Hannifin
Hydraulic Filter Division Europe

European Product Information Centre
Freephone: 00800 27 27 5374
(from AT, BE, CH, CZ, DE, EE, ES, FI, FR, IE, IT, PT, SE, SK, UK)
filtrationinfo@parker.com

www.parker.com/hfde

Product Features:

- High quality pipe clamping system in 3 ranges - Series 10, 16 or 32.
- Pipe or hose diameters from 6mm up to 50mm.
- 26 different diameter, high quality split rubber bushes.
- Zinc plated steel construction with anti-corrosive, full passivate.
- Stainless Steel clamp available.



When only the best Clamping System will do ....specify Multiclamp

Multiclamp is a system. A system of components, each one engineered to a high standard – that together build to provide effective, all-purpose pipework clamping. Multiclamp offers creative and cost-effective environmental benefits to the system designer and installer. Creating accurate runs of varying diameter tubes, pipes, hoses and cables in all industries.

Secure Multiclamp installations ensure a leak free, noise free and vibration free system.

The neat design of pipe line runs offers easy maintenance of machinery and plant equipment. Visual planning of line runs is straightforward with Multiclamp – accurate installations can be achieved without skilled labour – keeping costs down and quality up.

Planning with Multiclamp

These notes have been compiled to assist in planning your Multiclamp system.

Multiclamp offers considerable flexibility. For example, it can fit in with a factory installation that is being built in phases.

Should a last minute change in pipe diameter occur during installation, an alternative rubber bush is likely to be all that is required. Not a complete and expensive re-think of the installation.

Multiclamp metal components can be sprayed to match a vehicle livery or plant installation and, if installed properly, should require no maintenance.

Installation is simple and requires no experience

Anyone can use Multiclamp and only the basic, everyday tools are required.

From one pipe to almost any number – because each Multiclamp 'position' can be visually sighted and its position adjusted – an almost guaranteed straight run can be obtained. Equally, changes of plane or direction can be achieved simply and securely.

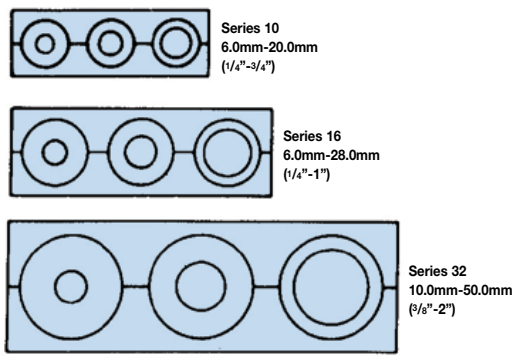

Your maximum pipe size will determine the series to use. There is a degree of versatility provided by the rubber bushes. You choose from single or multistacked Multiclamp, whichever suits your particular installation requirements.

Group pipe sizes together to obtain the most economical use of three basic Multiclamp Series.

Some sites will require all pipes mounted in one single plane – either vertical or horizontal.

When stacked modules are preferred, the only work to be done on the Multiclamp is to saw off the desired length.

If a large number of pipe lines are to be run, it is recommended that the upper clamping unit is simply cut into two lines only, and progressively assembled by securing two pipes at a time. It will be recognised that most odd lengths on site will be used, and one man can easily cope with a large number of pipe lines by this simple progressive build up. This assembly will provide easy access for servicing and replacing pipes. This method also reduces the quantity of Stacking Nuts and Studs by 50%.

If a factory installation is being built in phases, it would be wise to leave the first phase with a lower clamping unit and Stacking Nuts in position ready to receive pipe runs for the next building phase.

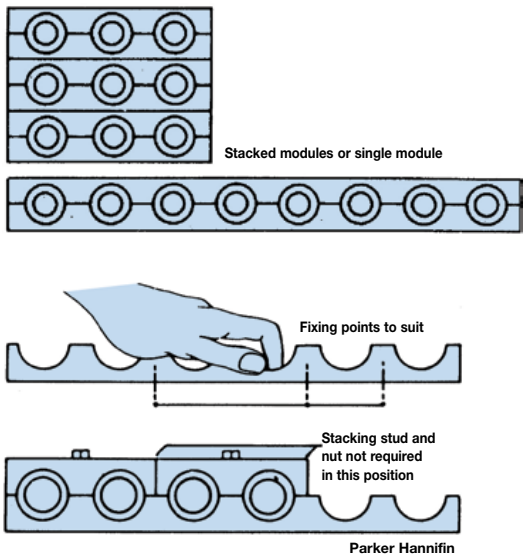

Parker

Parker Hannifin
Hydraulic Filter Division Europe
FDHB500UK/Reservoir

Multiclamp

Pipe Clamp System

Specification

Dimension details supplied in product configurator

Single Clamp

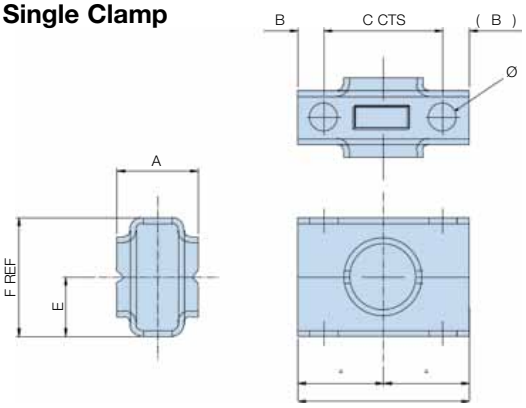

Double Clamp

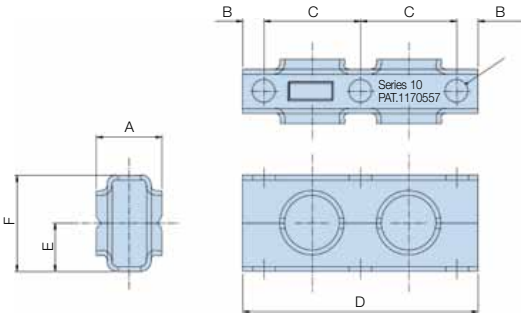

Multiclamp – 12 or 16 holes

1 box of clamping units = 1 pair

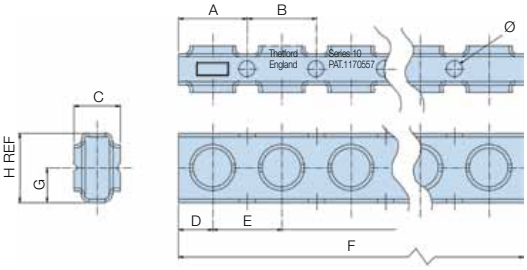

Split Bushes

Split bushes are ordered in sets only
i.e. 1 box of bushes = 10 bushes of one size

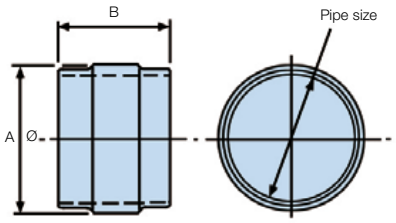

Material Specifications

Zinc plated steel with anti-corrosive, full passivate. Multiclamp can also be multi-stacked using stacking studs and nuts. Series 10 and 16 clamp is supplied in lengths of 603mm and Series 32 in lengths of 1206mm. These can be simply cut to the required lengths for installation.

Note 1: For stainless steel version please consult Parker.
Note 2: Where appropiate a 'set' has been redefined as a 'box'.

Series 10 will accept pipe or hose diameters from 6mm up to 20mm maximum. Series 16 from 6mm up to 28mm and Series 32 from 10mm up to 50mm. Across the 3 Series, there are 26 different high-quality split rubber bushes to select from to cope with any combination and number of different pipe and hose diameters in the same run.

Stacking Nuts

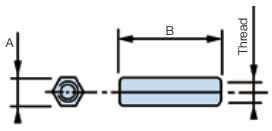

Stacking nuts are ordered in multiples of 50 stacking nuts of one size only.

Stacking Studs

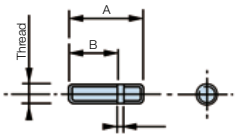

Stacking studs are ordered in multiples of 50 stacking studs of one size only.

Mounting Adaptors

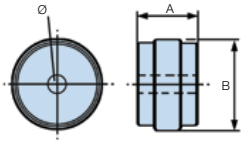

Mounting adaptors are not ordered in multiples . i.e. 1 off mounting adaptors = 1 single piece.

Weld Plate

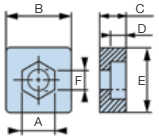

Weld plates are ordered in multiples of 10 weld plates only.

Tel: +45 63 12 83 00 | Email: ps@hymatik.com | www.hymatik.com | Hvidkaervej 27a, DK-5250 Odense SV, Denmark

Ordering Information - Series 10

Product configurator

Part number	Supersedes	Description	Pack quantity	Dimensions (mm)									Thread	Pack weight
				A	B	C	D	E	F	G	H	Ø		
MC101	MC.10.1	Single clamp	10 pairs	25.0	8.5	38.1	55.0	19.0	38.0			9.0		0.60 Kg
MC102	MC.10.2	Double clamp	10 pairs	25.0	8.5	38.1	93.0	19.0	38.0			9.0		1.00 Kg
MC1016	MC.10.16	16 bay clamp	2 pairs	34.0	38.1	25.0	15.0	38.1	601.5	19.0	38.0	9.0		1.60 Kg
MCN10	MC.N.10	Stacking nut	50	11.0	33.0								M8 x 1.25	0.80 Kg
MCS10	MC.S.10	Stacking stud	50	32.0	21.0	2.6							M8 x 1.25	0.50 Kg
MCWP10	MC.WP.10	Weld plate	10	13.3	25.0	10.0	6.3	25.0	8.5					0.35 Kg
MCSB10	MC.SB.10	Standard bolt	50	27.0									M8 x 1.25	0.55 Kg
MCB10MO	MC.B.10.MO	Mounting adaptor	1		25.0							8.7		0.02 Kg

Part number	Supersedes	Description	Pack quantity	Dimensions (mm)		Pipe size		Pack weight
				A	B	(mm)	OD	
MCG105	MC.G.10.5	Split bush	10	25.5	27.0	8	5/16	0.13 Kg
MCG106	MC.G.10.6	Split bush	10	25.5	27.0	10	3/8	0.12 Kg
MCG108	MC.G.10.8	Split bush	10	25.5	27.0	12-14	1/2	0.12 Kg
MCG1010	MC.G.10.10	Split bush	10	25.5	27.0	15-16	5/8	0.10 Kg
MCG1012	MC.G.10.12	Split bush	10	25.5	27.0	18-20	3/4	0.90 Kg
MCG104	MC.G.10.4	Split bush	10	25.5	27.0	6	1/4	0.13 Kg

Note 1: Part numbers featured with bold highlighted codes will ensure a 'standard' product selection.
Note 2: Alternate displayed part number selection will require you to contact Parker Filtration for availability.

Ordering Information - Series 16

Product configurator

Part number	Supersedes	Description	Pack quantity	Dimensions (mm)									Thread	Pack weight
				A	B	C	D	E	F	G	H	Ø		
MC161	MC.16.1	Single clamp	10 pairs	25.0	7.0	50.8	65.0	23.8	47.6			9.0		0.80 Kg
MC162	MC.16.2	Double clamp	10 pairs	25.0	7.0	50.8	116.0	23.8	47.6			9.0		1.60 Kg
MC1612	MC.16.12	12 bay clamp	2 pairs	47.0	50.8	25.0	21.0	50.8	608.8	25.0	47.6	9.0		2.00 Kg
MCN16	MC.N.16	Stacking nut	50	11.0	44.0								M8 x 1.25	1.06 Kg
MCS10	MC.S.10	Stacking stud	50	32.0	21.0	2.6							M8 x 1.25	0.50 Kg
MCWP10	MC.WP.10	Weld plate	10	13.3	25.0	10.0	6.3	25.0	8.5					0.35 Kg
MCSB10	MC.SB.10	Standard bolt	50										M8 x 1.25	0.55 Kg
MCB16MO	MC.B.16.MO	Mounting adaptor	1	27.0	36.0							8.7		0.06 Kg

Part number	Supersedes	Description	Pack quantity	Dimensions (mm)		Pipe size		Pack weight
				A	B	(mm)	OD	
MCG165	MC.G.16.5	Split bush	10	35.4	27.0	8	5/16	0.28 Kg
MCG166	MC.G.16.6	Split bush	10	35.4	27.0	10	3/8	0.28 Kg
MCG168	MC.G.16.8	Split bush	10	35.4	27.0	12-14	1/2	0.26 Kg
MCG1610	MC.G.16.10	Split bush	10	35.4	27.0	15-16	5/8	0.22 Kg
MCG1612	MC.G.16.12	Split bush	10	35.4	27.0	18-20	3/4	0.20 Kg
MCG1614	MC.G.16.14	Split bush	10	35.4	27.0	22.0	7/8	0.18 Kg
MCG1616	MC.G.16.16	Split bush	10	35.4	27.0	25.0	1	0.14 Kg
MCG1618	MC.G.16.18	Split bush	10	35.4	27.0	28.0		0.16 Kg
MCG164	MC.G.16.4	Split bush	10	35.4	27.0	6	1/4	0.28 Kg

Note 1: Part numbers featured with bold highlighted codes will ensure a 'standard' product selection.
Note 2: Alternate displayed part number selection will require you to contact Parker Filtration for availability.

Tel: +45 63 12 83 00 | Email: ps@hymatik.com | www.hymatik.com | Hvidkaervej 27a, DK-5250 Odense SV, Denmark

Multiclamp

Pipe Clamp System

Ordering Information - Series 32

Product configurator

Part number	Supersedes	Description	Pack quantity	Dimensions (mm)									Thread	Pack weight
				A	B	C	D	E	F	G	H	Ø		
MC321	MC.32.1	Single clamp	10 pairs	40.0	9.4	76.2	95.0	38.0	76.2			11.1		2.25 Kg
MC322	MC.32.2	Double clamp	10 pairs	41.0	9.4	76.2	171.0	38.0	76.2			11.1		3.82 Kg
MC3216	MC.32.16	16 bay clamp	2 pairs	72.0	76.2	40.0	34.0	76.2	1211.0	38.5	77.0	11.0		7.60 Kg
MCN32	MC.N.32	Stacking nut	50	13.0	71.5								M10 x 1.5	1.99 Kg
MCS32	MC.S.32	Stacking stud	50	38.0	22.0	4.0							M10 x 1.5	0.90 Kg
MCWP32	MC.WP.32	Weld plate	10	17.5	32.0	12.0	8.0	32.0	11.0					0.70 Kg
MCSB32	MC.SB.32	Standard bolt	50										M10 x 1.5	1.30 Kg
MCB32MO	MC.B.32.MO	Mounting adaptor	1	40.0	58.0							10.7		0.26 Kg

Part number	Supersedes	Description	Pack quantity	Dimensions (mm)		Pipe size		Pack weight
				A	B	(mm)	OD	
MCG3210	MC.G.32.10	Split bush	10	59.0	44.5	15-16	5/8	1.10 Kg
MCG3212	MC.G.32.12	Split bush	10	59.0	44.5	18-20	3/4	1.10 Kg
MCG3216	MC.G.32.16	Split bush	10	59.0	44.5	25	1	1.00 Kg
MCG3218	MC.G.32.18	Split bush	10	59.0	44.5	28-30		1.00 Kg
MCG3220	MC.G.32.20	Split bush	10	59.0	44.5	32-34	1 1/4	0.80 Kg
MCG3224	MC.G.32.24	Split bush	10	59.0	44.5	35-38	1 1/4	0.80 Kg
MCG3232	MC.G.32.32	Split bush	10	59.0	44.5	50	2	0.40 Kg
MCG326	MC.G.32.6	Split bush	10	59.0	44.5	10	3/8	1.30 Kg
MCG328	MC.G.32.8	Split bush	10	59.0	44.5	12-14	1/2	1.20 Kg
MCG3214	MC.G.32.14	Split bush	10	59.0	44.5	22	7/8	1.00 Kg
MCG3226	MC.G.32.26	Split bush	10	59.0	44.5	42		0.60 Kg

Note 1: Part numbers featured with bold highlighted codes will ensure a 'standard' product selection.
Note 2: Alternate displayed part number selection will require you to contact Parker Filtration for availability.

How to 'build' Multiclamp



















Inline Check Valves

Reservoir Equipment

Specification



Construction:
Steel UNI 5105.

Ball and spring:
Chrome finished steel.

Retainer:
Nylon.

Flow rates:
From 20 l/min to 150 l/min.

Max. working pressure:
350 bar.

Valve crack pressures:
0.35 and 4.5 bar.

Max. operating temp:
120°C.

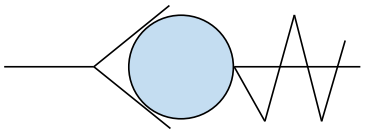

Circuit symbol

Installation Details

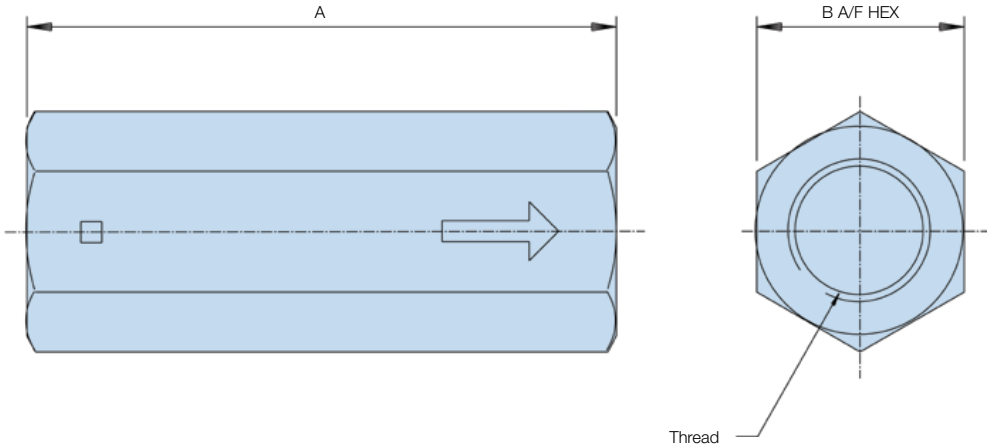

Technical Data

Pressure Drop Flow Curves

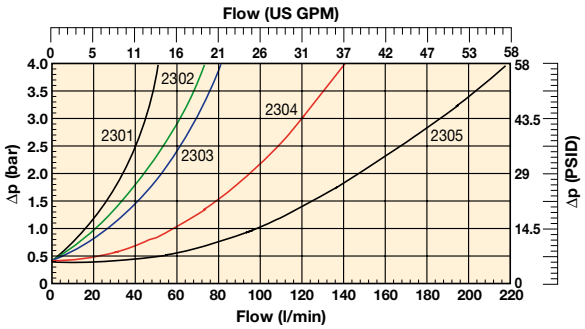

Ordering Information

Standard products table

Part number	Flow l/min	Cracking pressure bar	Thread G	A mm	B mm	Weight Kg
2301	20	0.35	1/4	54	19	0.09
2302	30	0.35	3/8	66	24	0.17
2303	50	0.35	1/2	77	30	0.32
2304	100	0.35	3/4	88	36	0.48
2305	150	0.35	1	108	46	0.99
2311	20	4.50	1/4	54	19	0.09
2312	30	4.50	3/8	65	24	0.17
2313	50	4.50	1/2	77	30	0.32
2314	100	4.50	3/4	88	36	0.48
2315	150	4.50	1	108	46	0.99

Tel: +45 63 12 83 00 | Email: ps@hymatik.com | www.hymatik.com | Hvidkaervej 27a, DK-5250 Odense SV, Denmark

Single Station Gauge Isolator Valves

Reservoir Equipment

Specification



Construction:
Single Station: Cast iron and steel. Knurled plastic knob with 'Push to read' plus 'Twist to lock' or 'Push to read' only type.

Max. working pressure:
350 bar.

Port size:
Single Station: G1/4.

Weight:
Single Station: 0.90 Kg.

Single Station Installation Details

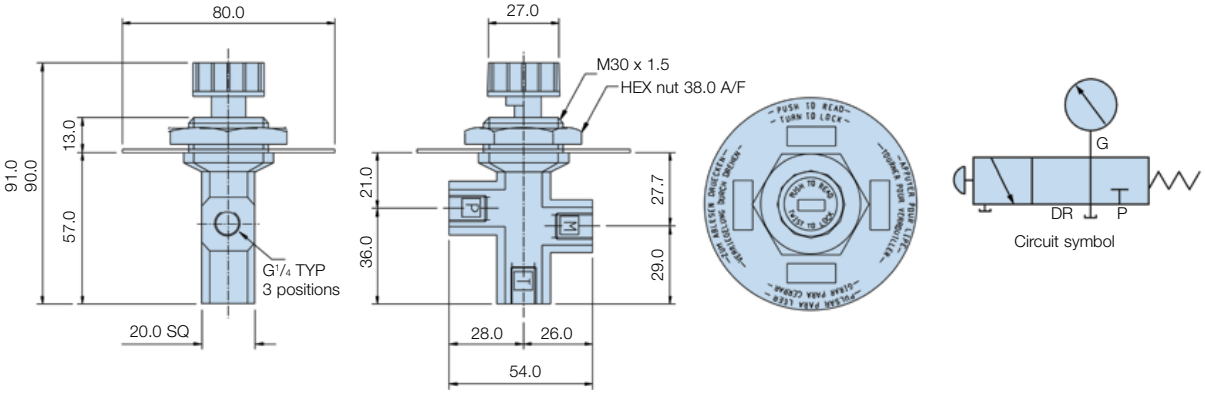

Operation Details

Single Station

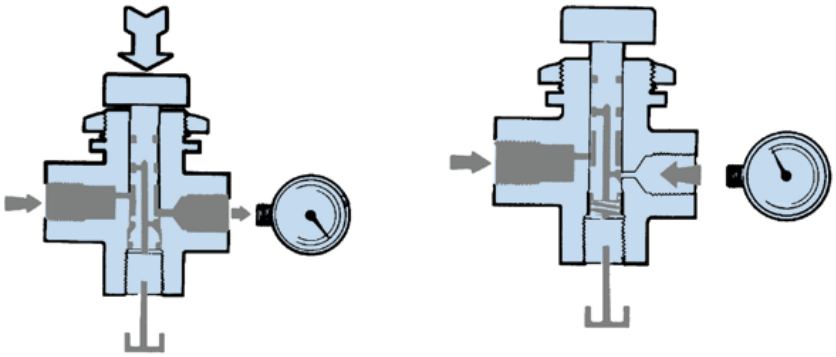

Ordering Information

Standard products table

Part number	Description	Weight
GI1486	Single station gauge isolator "Push to read" plus "twist to lock" type	0.90 Kg
GI1414	Single station gauge isolator "push to read" only type	0.90 Kg

63mm Dia. Pressure Gauges

Reservoir Equipment

Specification



Construction:
Case: Natural finish stainless steel.
Window: Non-splintering clear acrylic glass.
Movement: Cu alloy.
Dial: White plastic, with pointer stop pin.
Pointer: Black plastic.

Liquid filling:
Glycerine 99.7%.

Working pressure:
Max 75% of the full scale value.

Process temperature range:
0°C to 60°C maximum.

Accuracy:
1.6% FSD.

Wetted parts connector:
Copper alloy.

Bourdon tube:
< 60 bar = Cu alloy, C-type, soft soldered.
> 60 bar = Cu alloy, helical type, soft soldered.

IP Class:
IP65.

Mounting Stem Detail

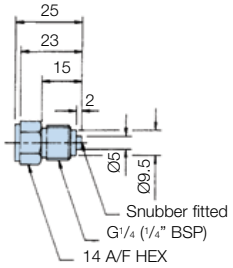


Symbol

Note: It is recommended that all glycerine gauges should be mounted in the vertical position with gauge case relief valve uppermost. Pressure range up to 1000 bar available.

Installation Details

Bottom Connection

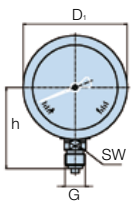

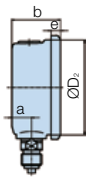

Panel Mounting (Centre Back)

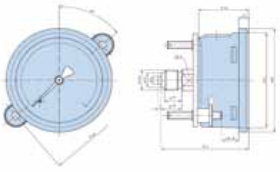

Dimensions (mm) **Bottom Connection**

a b ±0.5	D1	D2	e	G	h ±1	SW	Weight Kg	
13	32	68	62	6.5	G1/4	54	14	0.21

Dimensions (mm) **Panel Mounting (Lower Back)**

b b2 ±0.5±1	D1	D2	e	G	SW	Weight Kg	
32	56	68	62	6.5	G1/4	14	0.21

Note 1: Panel cut-out 64.5 ±0.5
Note 2: 13mm on the outside radius required to allow for fixing clamp.

Panel Mounted (3-hole flange)

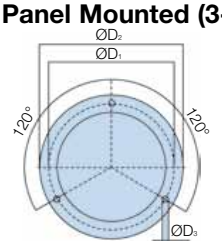

Note 1: Gauge dimensions as for panel mounting option above with flange as shown below.
Note 2: Panel cut-out for 3-hole mounting 67±0.3.

Dimensions (mm)

D1	D2	D3	
75	85	3.6	

Ordering Information

Bottom Connection

Part number	Supersedes	Pressure range	Connector type
PGB0631010	PGB.0631.010	0-10 bar	G1/4 Bottom
PGB0631016	PGB.0631.016	0-16 bar	G1/4 Bottom
PGB0631025	PGB.0631.025	0-25 bar	G1/4 Bottom
PGB0631040	PGB.0631.040	0-40 bar	G1/4 Bottom
PGB0631060	PGB.0631.060	0-60 bar	G1/4 Bottom
PGB0631100	PGB.0631.100	0-100 bar	G1/4 Bottom
PGB0631160	PGB.0631.160	0-160 bar	G1/4 Bottom
PGB0631250	PGB.0631.250	0-250 bar	G1/4 Bottom
PGB0631400	PGB.0631.400	0-400 bar	G1/4 Bottom
PGB0631600	PGB.0631.600	0-600 bar	G1/4 Bottom
PGB0631004	PGB.0631.004	0-4 bar	G1/4 Bottom

Panel Mounting

Part number	Supersedes	Pressure range	Connector type
PGC0631010	PGC.0631.010	0-10 bar	G1/4 Panel
PGC0631016	PGC.0631.016	0-16 bar	G1/4 Panel
PGC0631025	PGC.0631.025	0-25 bar	G1/4 Panel
PGC0631040	PGC.0631.040	0-40 bar	G1/4 Panel
PGC0631060	PGC.0631.060	0-60 bar	G1/4 Panel
PGC0631100	PGC.0631.100	0-100 bar	G1/4 Panel
PGC0631160	PGC.0631.160	0-160 bar	G1/4 Panel
PGC0631250	PGC.0631.250	0-250 bar	G1/4 Panel
PGC0631400	PGC.0631.400	0-400 bar	G1/4 Panel
PGC0631004	PGC.0631.004	0-4 bar	G1/4 Panel
PGC0631600	PGC.0631.600	0-600 bar	G1/4 Panel

Panel Mounted (3-hole flange)

Part number	Supersedes	Pressure range	Connector type
PGF0631060	PGF.0631.060	0-60 bar	G1/4 Panel Flange
PGF0631100	PGF.0631.100	0-100 bar	G1/4 Panel Flange
PGF0631160	PGF.0631.160	0-160 bar	G1/4 Panel Flange
PGF0631250	PGF.0631.250	0-250 bar	G1/4 Panel Flange
PGF0631400	PGF.0631.400	0-400 bar	G1/4 Panel Flange
PGF0631004	PGF.0631.004	0-4 bar	G1/4 Panel Flange
PGF0631010	PGF.0631.010	0-10 bar	G1/4 Panel Flange
PGF0631016	PGF.0631.016	0-16 bar	G1/4 Panel Flange
PGF0631025	PGF.0631.025	0-25 bar	G1/4 Panel Flange
PGF0631040	PGF.0631.040	0-40 bar	G1/4 Panel Flange
PGF0631600	PGF.0631.600	0-600 bar	G1/4 Panel Flange

Note 1: Part numbers featured with bold highlighted codes will ensure a 'standard' product selection.
Note 2: Alternate displayed part number selection will require you to contact Parker Filtration for availability.
*Note 3: Any subsequent changes to gauge accuracy will be notified.

Tel: +45 63 12 83 00 | Email: ps@hymatik.com | www.hymatik.com | Hvidkaervej 27a, DK-5250 Odense SV, Denmark

100mm Dia. Pressure Gauges

Reservoir Equipment

Specification



Construction:
Case: BS 304 S15 stainless steel.
Window: Acrylic.
Movement: Brass.
Dial: White aluminium.
Pointer: Black aluminium.

Liquid filling:
Glycerine 98%.

Working pressure:
Full scale value.

Process temperature range:
–20°C to +60°C maximum.

Accuracy:
1.0% FSD.

Wetted parts connector:
Copper alloy.

Bourdon tube:
< 100 bar = Cu alloy, c-type, soft soldered.
> 100 bar = stainless steel 1.4571, helical type, brazed.

IP Class:
IP65.

Mounting Stem Detail

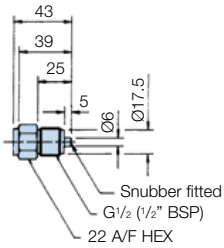



Note: It is recommended that all glycerine gauges should be mounted in the vertical position with gauge case relief valve uppermost.

Installation Details

Bottom Connection

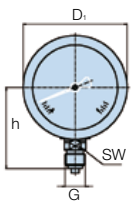

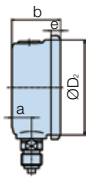

Panel Mounting (Lower Back)

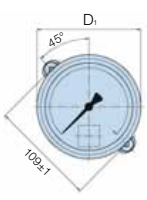

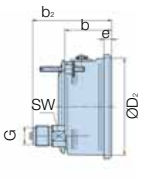

Dimensions (mm) Bottom Connection

a b ±0.5	D1	D2	e	G	h ±1	SW	Weight Kg	
15.5	48	107	100	8	G1/2	87	22	0.80

Dimensions (mm) Panel Mounting (Lower Back)

b b2 ±0.5	D1 ±1	D2	e	G	SW	Weight	Kg
48	81.5	107	100	8	G1/2	22	0.80

Note 1: Panel cut-out 102 ±1.0
Note 2: 13mm on the outside radius required to allow for fixing clamp.

Panel Mounted (3-hole flange)

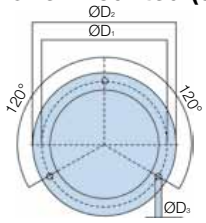

Note 1: Gauge dimensions as for panel mounting option above with flange as shown below.
Note 2: Panel cut-out for 3-hole mounting 104±0.5.

Dimensions (mm)

D1	D2	D3
116	132	4.8

Ordering Information

Bottom Connection

Part number	Supersedes	Pressure range	Connector type
PGB1001250	PGB.1001.250	0-250 bar	G1/2 Bottom
PGB1001400	PGB.1001.400	0-400 bar	G1/2 Bottom
PGB1001010	PGB.1001.010	0-10 bar	G1/2 Bottom
PGB1001016	PGB.1001.016	0-16 bar	G1/2 Bottom
PGB1001025	PGB.1001.025	0-25 bar	G1/2 Bottom
PGB1001040	PGB.1001.040	0-40 bar	G1/2 Bottom
PGB1001060	PGB.1001.060	0-60 bar	G1/2 Bottom
PGB1001100	PGB.1001.100	0-100 bar	G1/2 Bottom
PGB1001160	PGB.1001.160	0-160 bar	G1/2 Bottom
PGB1001600	PGB.1001.600	0-600 bar	G1/2 Bottom
PGB10011000	PGB.1001.1000	0-1000 bar	G1/2 Bottom

Panel Mounting

Part number	Supersedes	Pressure range	Connector type
PGE1001010	PGE.1001.010	0-10 bar	G1/2 Panel
PGE1001016	PGE.1001.016	0-16 bar	G1/2 Panel
PGE1001025	PGE.1001.025	0-25 bar	G1/2 Panel
PGE1001040	PGE.1001.040	0-40 bar	G1/2 Panel
PGE1001060	PGE.1001.060	0-60 bar	G1/2 Panel
PGE1001100	PGE.1001.100	0-100 bar	G1/2 Panel
PGE1001160	PGE.1001.160	0-160 bar	G1/2 Panel
PGE1001250	PGE.1001.250	0-250 bar	G1/2 Panel
PGE1001400	PGE.1001.400	0-400 bar	G1/2 Panel
PGE1001600	PGE.1001.600	0-600 bar	G1/2 Panel
PGE10011000	PGE.1001.1000	0-1000 bar	G1/2 Panel

Panel Mounted (3-hole flange)

Part number	Supersedes	Pressure range	Connector type
PGF1001250	PGF.1001.250	0-250 bar	G1/2 Panel Flange
PGF1001400	PGF.1001.400	0-400 bar	G1/2 Panel Flange
PGF1001010	PGF.1001.010	0-10 bar	G1/2 Panel Flange
PGF1001016	PGF.1001.016	0-16 bar	G1/2 Panel Flange
PGF1001025	PGF.1001.025	0-25 bar	G1/2 Panel Flange
PGF1001040	PGF.1001.040	0-40 bar	G1/2 Panel Flange
PGF1001060	PGF.1001.060	0-60 bar	G1/2 Panel Flange
PGF1001100	PGF.1001.100	0-100 bar	G1/2 Panel Flange
PGF1001160	PGF.1001.160	0-160 bar	G1/2 Panel Flange
PGF1001600	PGF.1001.600	0-600 bar	G1/2 Panel Flange
PGF10011000	PGF.1001.1000	0-1000 bar	G1/2 Panel Flange

Note 1: Part numbers featured with bold highlighted codes will ensure a 'standard' product selection.
Note 2: Alternate displayed part number selection will require you to contact Parker Filtration for availability.
*Note 3: Any subsequent changes to gauge accuracy will be notified.

Tel: +45 63 12 83 00 | Email: ps@hymatik.com | www.hymatik.com | Hvidkaervej 27a, DK-5250 Odense SV, Denmark

icountLaserCM20
Fluid Condition Monitoring
Portable Particle Counter



A 2-minute contamination test procedure:

A portable particle counter designed to be used in the field

icountLCM20 is a proven answer to fluid system contamination monitoring offering a 2-minute test procedure. Multi-standard ISO and NAS cleanliness reporting, data entry, data graphing and integral printing are all standard on this world proven contamination monitor.



Contact Information:

Parker Hannifin
Hydraulic Filter Division Europe

European Product Information Centre
Freephone: 00800 27 27 5374
(from AT, BE, CH, CZ, DE, EE, ES, FI, FR, IE, IT, PT, SE, SK, UK)
filtrationinfo@parker.com

www.parker.com/hfde

Product Features:

- icountLCM20 is a proven answer to fluid system contamination monitoring.
- 2-minute test procedure.
- Multi-standard ISO, NAS and AS4059 cleanliness reporting.
- Data entry, data graphing and integral printer.
- 420 bar rated maximum pressure.
- Supported by the offline UBS and online SPS accessories.

icountLaserCM20

Portable Particle Counter

Features & Benefits

Test time:	2 minutes
Particle counts:	MTD 4+, 6+, 14+, 21+, 38+ and 70+ microns(c) ACFTD 2+, 5+, 15+, 25+, 50+ and 100+ microns
International codes:	ISO 7-22, NAS 0-12
Data retrieval:	Memory access gives test search facility
Max. working pressure:	420 bar
Max. flow rate:	400 l/min when used with system 20 Sensors. Higher with single point sampler (see page 404)
Working conditions:	LaserCM will operate with the system working normally
Computer compatibility:	Interface via RS232 connection @ 9600 baud rate.

- Special 'diagnostics' are incorporated into the icountLaserCM microprocessor control to ensure effective testing.
- Routine contamination monitoring of oil systems with icountLaserCM saves time and saves money.
- Contamination monitoring is now possible during applicaton operation - icountLaserCM saves on production downtime.
- Data entry allows individual equipment test log details to be recorded.
- Data retrieval of test results from memory via hand set display.
- Automatic test cycle logging of up to 300 tests can be selected via hand set display.
- Totally portable, can be used as easily in the field as in the laboratory.
- Automatic calibration reminder.
- Instant, accurate results achieved with a 2 minute test cycle.
- Data entry allows individual equipment footprint record.
- Data graphing selectable via the integral printer.
- Auto 300-test cycle logging via LCD handset input.
- RS232 to USB computer interface.
- Limit level output to control peripheral equipment such as off-line filtration via internal relay limit switches.
- Auto-testing allows for the conducting of automatic sequencing tests on flushing systems for example.
- Optional bar code swipe wand to allow handset data loading.
- Worldwide service and technical support.
- Re-calibration - Annual certification by an approved Parker Service Centre.

Typical Applications

- Construction machinery
- Industrial plant
- Hydraulic equipment & system manufacturers
- Research & testing institutes
- Offshore & power generation
- Marine
- Military equipment applications

Parker LaserCM Portable Particle Counter.

With 20 years experience in manufacturing the world's best selling 'white light' portable particle counter – CM20, the progression to the icountLaserCM with its opto-mechanical, continuous wave single point source laser (SPSL) is both a natural and customer driven development.



Parker Hannifin
Hydraulic Filter Division Europe
FDHB500UK/icountLCM20

Tel: +45 63 12 83 00 | Email: ps@hymatik.com | www.hymatik.com | Hvidkaervej 27a, DK-5250 Odense SV, Denmark

Specification

Automatic Particle Counters (APC's), have been widely used for many years in condition monitoring of hydraulic fluids. However, it is only recently that APC's have become flexible enough to enable the instruments to be taken out of the laboratory and used on-line in order to obtain the most credible form of results.

Unusually, the move from fixed laboratory use, to portable field use has not been at the expense of accuracy or user flexibility, but has actually enabled the instruments to be used over a wider range of applications and situations.

The most common monitoring technique used in APC's is that of light obscuration or light blockage. Here, a focused light source is projected through a moving column of oil, (in which the contaminants being measured are contained), causing an image of the contaminant to be projected on to a photo diode cell, (changing light intensity to an electrical output).

The electrical output of the photo diode cell will vary in accordance with the size of the particles contained in the column of oil; the larger the particle, the bigger the change in the photo diode electrical output.

On-line APC's must be able to test the oil sample at whatever cleanliness it is delivered to the machine. Parker therefore had to develop technology to ensure the on-line APC was able to test a sample without the conventional laboratory technique which requires dilution - a practice that would have been simply impossible with a portable unit.

By careful design and window sizing, gravimetric levels as high as 310mg of dirt per litre, (equivalent to up to 4 million particles >6 micron per 100 ml), can be achieved without making the instrument susceptible to counter saturation.

These high saturation point on-line APC's, whilst losing none of the accuracy of their laboratory counterparts, enable particle counting to be carried out quickly and accurately.



A focused light source is projected through a moving column of oil.

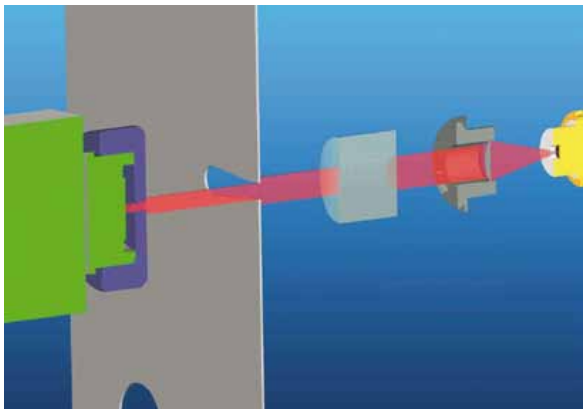

Laser Optical Sensing

Core technology that proves itself in icountLaserCM

The icountLaserCM portable particle counter features microprocessor controlled optical scanning for accurate contaminant measurement with a calibration range from ISO 7 to ISO 22 with no counter saturation.

How does icountLaserCM work?

- The particles are measured by a photo diode that converts light intensity to a voltage output which is recorded against time.
- As the particle moves across the window the amount of light lost is proportional to the size of the particle. This reduction in voltage is measured and recorded.
- This "voltage" lost relates directly to the area of the particle measured, is changed into a "positive" voltage and then in turn changed into a capacitance value.
- This value is counted and stored in the icountLaserCM computer in one of 6 channels according to particle size.
- Readouts are displayed on the hand-held LCD in the accepted ISO and NAS standards ready for hard copy printing or RS232 computer download.
- The on-board computer allows storage of up to 300 test results.

Tel: +45 63 12 83 00 | Email: ps@hymatik.com | www.hymatik.com | Hvidkaervej 27a, DK-5250 Odense SV, Denmark

icountLaserCM20

Portable Particle Counter

Specification

Description	LaserCM (LCM20 20 22)	LaserCM (LCM20 20 62)
ABS structural foam and injection moulded case	●	●
ABS handheld display	●	●
Mechanical composition – Brass, plated steel, stainless steel and aluminium	●	●
Fluorocarbon seals	●	
Perfluoroelastomer seals		●
Nylon hoses (kevlar braided microbore)	●	●
Stainless steel armoured hose ends	●	●
1.2m fluid connection hose	●	●
Rechargeable battery pack	●	●
12Vdc power supply	●	●
Fast blow fuse	●	●
Unique optical scanning system	●	●
Bonded glass optical window enclosed in SS plate	●	●
Micron channels analysis (Six)	●	●
Analysis range ISO 7 to 22 incl. (NAS 0 to 12)	●	●
32 character dot matrix LCD. Alpha numeric keypad	●	●
Data retrieval	●	●
Calibration to ISO standards*	●	●
Viscosity range 2 to 100 cSt. 500 cSt.with SPS	●	●
Operating temp.+5 to +80°C	●	●
Ambient temp.+5 to +40°C	●	●
2 minute test completion time	●	●
Memory store – 300 test memory	●	●
Battery operated 6 x 1.5 D cells	●	●
Phosphate Ester group compatibility		●
Mineral oil & petroleum based fluid compatibility	●	●
Up to 420 bar (6000 psi)	●	●
Integral 16 column printer	●	●
RS232 to USB computer interface	●	●
Astra board case weight – (Kg)	5	5
Unit weight – (Kg)	8	8
ParSmart software and cable link pack	●	●
Weather protector cover	●	
CE certified	●	●
Auto logging	●	●

*Note: In compliance with international standards, all Parker portable particle counters can meet the ISO Medium test dust standards. The icountLaserCM's, in addition to the complete range of Condition Monitoring products, are capable of achieving certification to ISO 4406:1999 and with traceability to ISO 11171 for SRM 2806, via ISO 11943.

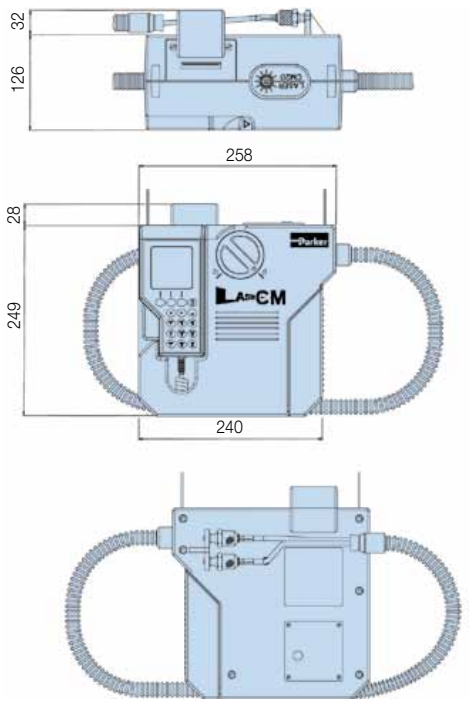

Commissioning Kit

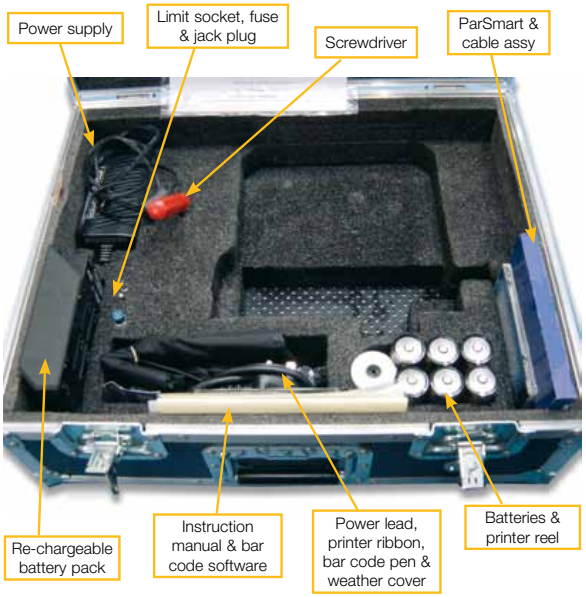

Operation





Operating the Parker icountLaserCM is as simple as pressing the start button and turning the dial. The test procedure is automatic and in the case of the icountLaserCM takes no more than 2 minutes to complete.

icountLCM20 makes the difference in industry

Fully accredited to BS EN 60825:1992 and IEC 60825-1 (safety of laser products) Standards, accredited to USA Standards and achieving full ISO certification. icountLaserCM offers users advanced laser technology, a fast, dynamic and on-line 2 minute system test cycle. An icountLaserCM Aggressive Fluids model is also available, suitable for monitoring corrosive fluids such as phosphate ester based lubricants used in commercial aviation.

MTD calibration

icountLaserCM MTD Calibration variants are certified via a primary ISO 11171 calibrated automatic particle counter. All MTD Laser CM20's achieve ISO 4406:1999 criteria, via ISO 11943.

icountLCM20 Using SPS



Understanding MTD

ACFTD (Air Cleaner Fine Test Dust) was formatted in the 1960's, but is no longer being produced. The obsolescence of this dust has led to the adoption of a new dust MTD.

MTD (Medium Test Dust) having a particle size distribution close to ACFTD was selected as a replacement. However, MTD produced results somewhat different to ACFTD, so the NIST (National Institute of Standards & Technology) undertook a project to certify the particle size distribution of ISO MTD.

The result was particle sizes below 10µm were greater than previously measured.

Particles sizes reported based on NIST would be represented as µm (c), with "c" referring to "certified". Therefore the icountLCM20 reported sizes are as follows:

ACFTD	MTD
2µ	4µ (c)
5µ	6µ (c)
15µ	14µ (c)
25µ	21µ (c)
50µ	38µ (c)
100µ	70µ (c)

MTD offers true traceability, improved particle size accuracy and better batch to batch reproduction.

Tel: +45 63 12 83 00 | Email: ps@hymatik.com | www.hymatik.com | Hvidkaervej 27a, DK-5250 Odense SV, Denmark

icountLaserCM20

Portable Particle Counter

Why On-Site Fluid Contamination Monitoring?

- Certification of fluid cleanliness levels.
- Early warning instrument to help prevent catastrophic failure in critical systems.
- Immediate results with laboratory accuracy.
- To comply with customer cleanliness requirements and specifications.
- New equipment warranty compliance.
- New oil cleanliness testing.



Data Download Management

Dedicated software, provides the link between an icountLaserCM20 and the H_2Oil - Water in Oil monitor and your computer management system.





16-column printer for hard copy data. A feature of the icountLaserCM is the on-board printout data graphing option developed to support predictive maintenance procedures.

icountLaserCM Test

ON LINE TEST

TEST NUMBER 022

	D M Y
Date	04-03-10
Time	15-52
ISO:	20/15/09

Count / 100ml

>4µ (c)	820721
>6µ (c)	31564
>14µ (c)	314
>21µ (c)	64
>38µ (c)	14
>70µ (c)	0

NOTES

ISO 4406 - 1999

icountLaserCM Test

ON LINE TEST

TEST NUMBER 022

	D M Y
Date	04-03-10
Time	15-52
NAS CLASS:	7

Count / 100ml

4/6µ (c)	789157
6/14µ (c)	31250
NAS CLASS	7
14/21µ (c)	250
NAS CLASS	3
21/38µ (c)	50
NAS CLASS	3
38/70µ (c)	14
NAS CLASS	4
>70µ (c)	0
NAS CLASS	0

NOTES

Correlation to NAS 1638

Tel: +45 63 12 83 00 | Email: ps@hymatik.com | www.hymatik.com | Hvidkaervej 27a, DK-5250 Odense SV, Denmark

Introducing the new icountLCM ‘Classic’

There is a new addition to the proven range – the icountLCM ‘Classic’. Only available from Parker, the ‘Classic’ retains all the technology that made the icountLaserCM one of the most accurate, reliable and popular portable particle counters available.

Our design engineers have re-configured the icountLaserCM specification in a way that has reduced our manufacturing costs. These savings have been passed onto icountLCM ‘Classic’ customers.

How have we done this?

Parker listened to our existing customers and then to the engineers and maintenance operatives to find out the features that make the icountLaserCM a unique predictive maintenance instrument.

Then, we removed peripheral items such as the aluminium case and all the accessories, so a customer receives the icountLCM, with a CD user guide, professionally and securely boxed. One thing that has not altered is the icountLCM accuracy and icountLCM reliability. Our in-house software engineers have re-configured the EPROM, removing Data programming, User ID, Automatic Testing, Data retrieval, Alarm level settings, the barcode pen and Graph printing functions to reduce costs still further without in any way reducing the efficiency of the icountLCM. The icountLCM ‘Classic’ remains an instrument to be proud of.



Ordering Information (icountLaserCM and ‘Classic’ icountLaserCM)

Standard products table

Part number	Supersedes	Description
LCM202022	LCM20.2022	icountLCM20 (MTD calibrated)
LCM202026	LCM20.2026	icountLCM20 ‘classic’ (MTD calibrated)
ACC6NE015	B84702	Printer roll x 5
ACC6NE014	P.843702	Printer ribbon
ACC6NE013	B84609	Re-chargeable battery pack
ACC6ND002	P849603	Weather protector cover
ACC6ND000	B84703	USB to RS232 Download Cable

Note 1: Part numbers featured with bold highlighted codes will ensure a ‘standard’ product selection.
Note 2: Alternate displayed part number selection will require you to contact Parker Filtration for availability.

Product configurator

Model	Fluid type		Options	
LCM2020	**2**	Hydraulic mineral	**1**	icountLCM20 (ACFTD calibrated)
	6	Skydrol	**2**	icountLCM20 (MTD calibrated)
			5	icountLCM20 ‘classic’ (ACFTD calibrated)
			6	icountLCM20 ‘classic’ (MTD calibrated)
			7	icountLCM20 with CMP (ACFTD calibrated)
			8	icountLCM20 with CMP (MTD calibrated)

Note 1: Part numbers featured with bold highlighted codes will ensure a ‘standard’ product selection.
Note 2: Alternate displayed part number selection will require you to contact Parker Filtration for availability.
Note 3: Option 7 and 8 with CMP (Case mounted pump).

Universal Bottle Sampler

Simple and efficient offline oil sampling



Clean and contamination free sampling

Ideal for batch oil sampling and laboratory testing

The UBS provides the dynamic link to portable particle and water counters. The UBS off-line sampler has microprocessor technology to recognise and adjust to the connecting monitor including the icountLCM20 and H_2Oil water in oil monitor.



Contact Information:

Parker Hannifin
Hydraulic Filter Division Europe

European Product Information Centre
Freephone: 00800 27 27 5374
(from AT, BE, CH, CZ, DE, EE, ES, FI, FR, IE, IT, PT, SE, SK, UK)
filtrationinfo@parker.com

www.parker.com/hfde

Product Features:

- Simple operation
- Efficient testing procedure
- Clean and contamination free sampling
- Available for both mineral based and aggressive fluids
- Further advances the LCM20's flexibility into laboratory bottle sampling environments
- Can accept various different sized bottles
- Minimal working parts
- Internal auto setting fuse for overload protection
- Simple maintenance procedures

Specification

Description	UBS offline
Viscosity range 2 to 250 cSt	●
Operating temp +5 to +80°C	●
Test time 2m15s / 4m15s (Flush 2m)	●
12 Vdc power supply	●
Extruded aluminium construction	●
Unit weight - (Kg)	4
Mineral oil and petroleum based compatibility	Fluorocarbon seal
Phosphate Ester group compatibility	EPDM seals
CE certified	●
Military approved	●
Manual operation	●
Bottle pack	●
De-gassing chamber	●
Manual	●
Sample tube pack	●
Interface cable to LCM20, H_2Oil etc.	●

Installation Details

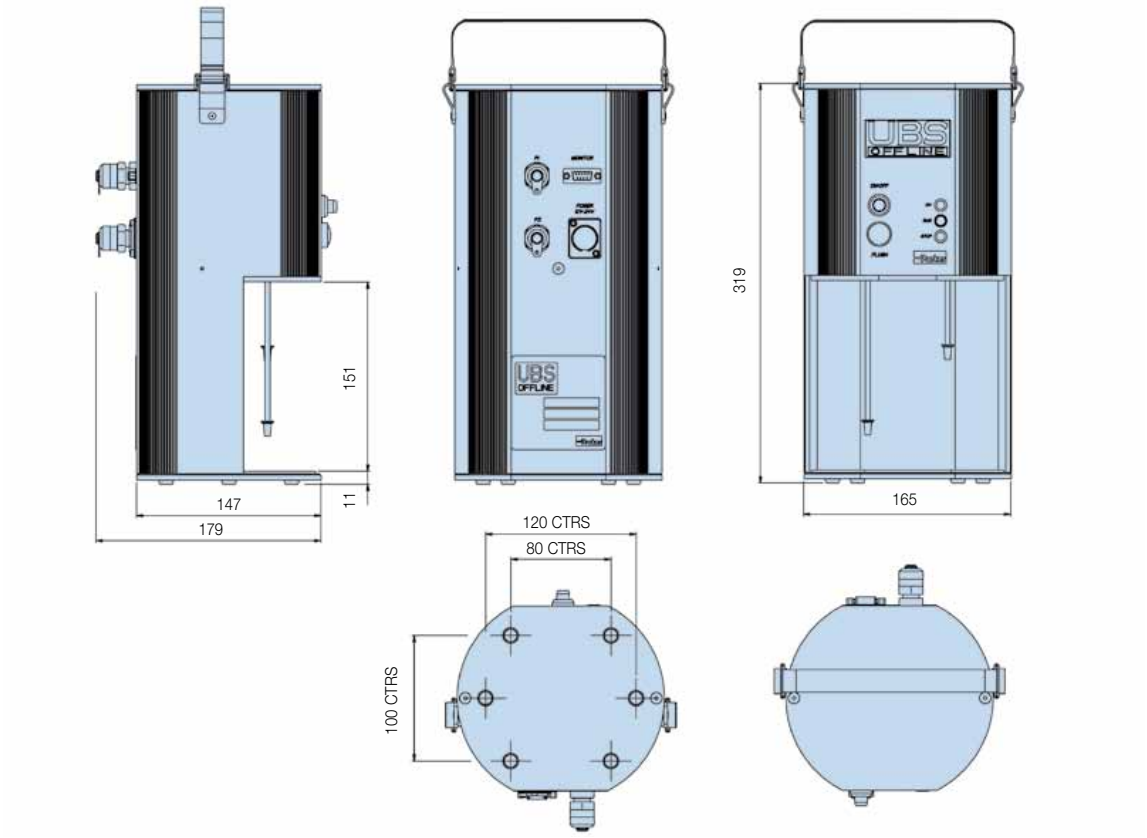

Universal Bottle Sampler

Simple and efficient offline oil sampling

System Flow Rate

Samples are best taken from a point in the system where the flow is TURBULENT (Reynolds No. greater than 4000). The turbulent flow creates a mixing action. Where flow is streamline or LAMINAR, larger particulate may tend to settle toward the lower pipe surface and not be sampled.

System Condition Changes

Changes in the system operating condition, flow, temperature, pressure or vibration, can result in previously sedimented contaminant being retrained into the flowing oil. It is also possible that these changes may cause partially contaminated filter elements to shed particulate into the system. Samples should, therefore, be extracted when the system is in a steady state condition and the result less likely to be distorted by contaminant peaks.

There are a number of proprietary sampling valves available which adhere to good theoretical principles. However, they do tend to generate a level of precision and cost which is unnecessary for trend monitoring.

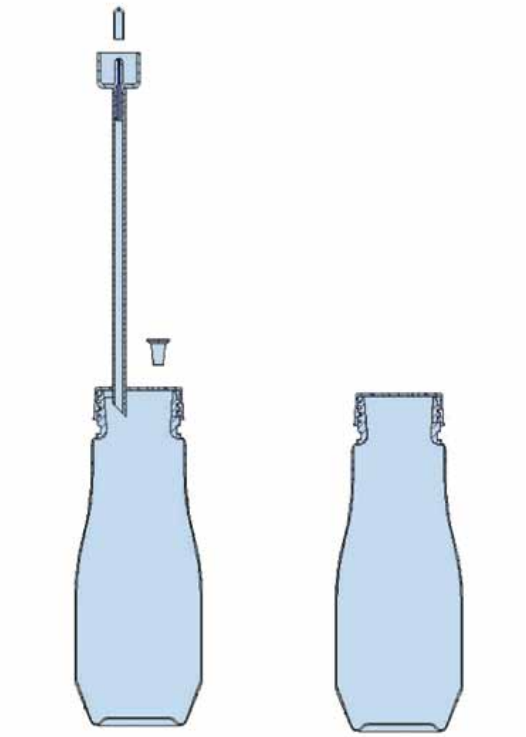

ACC6NW001 x 50 = ACC6NW002

ACC6NK001



Sampling points should enable extraction of a sample without changing the system's condition. Fine control needle valves are not desirable, as they have a tendency to silt up under some operating conditions, causing the distribution of contaminants in the fluid to be changed. The sampling port should be protected to maintain cleanliness and thoroughly flushed before collecting the sample for analysis. Allow sufficient airspace in the bottle to enable 80% fill.

Bottle Cleanliness

It is preferable that bottles have sealing screw caps and both parts are cleaned to a suitable level in accordance with ISO3722.

The bottle should not contain more than one tenth the number of particles per 100ml than are expected to be monitored. Standard Parker bottles ae supplied clean to ISO13/11 (NAS Class 4) and should not be used to accurately count oils cleaner than ISO 15/12 (NAS Class 6) although they may be used for "trend mlonitoring" at lower levels.

The bottle should remain capped until time of sample filling and re-capped immediately afterwards.

Sample Mixing

Sedimentation of contaminant in a sample will occur, the rate of which is dependent upon both fluid and particle characteristics.

Samples should be analysed, without delay, once agitated and de-glassed.

Tel: +45 63 12 83 00 | Email: ps@hymatik.com | www.hymatik.com | Hvidkaervej 27a, DK-5250 Odense SV, Denmark



Ordering Information

Standard products table

Part number	Description
UBS9002	Universal bottle sampler (includes aluminium case and accessories)
UBS9003	Universal bottle sampler
UBS9004	Aggressive universal bottle sampler
UBS9005	Aggressive universal bottle sampler (Includes aluminium case and accessories)

Accessories

Part number	Supersedes	Description
ACC6NK001	B89907	Sample bottle pair with cap, without tube
ACC6NW001	B89911	Sample bottle pair with extraction hose
ACC6NW002	B89910	100 Sample bottle pack (50 x ACC6NW001)
ACC6NK002	S840054	UBS Power supply
ACC6NK003	S890005	UBS De-gassing chamber and pump
ACC6NK004	B89603	UBS De-gassing chamber only
ACC6NK005	B89902	Cable and adaptor

Note 1: Part numbers featured with bold highlighted codes will ensure a 'standard' product selection.
Note 2: Alternate displayed part number selection will require you to contact Parker Filtration for availability.

Typical Applications

- Batch sampling
- Aircraft rig certification
- Oil research
- Laboratory testing
- Transfer line monitoring





Simple To Use UBS

The oil sample is drawn into the UBS Off-line where it is secured, free from further contamination, in a bottle together with a clean waste bottle by a peristaltic, self-priming pump. Simple operation and efficient testing are assured once the UBS Off-line is connected to any of the CM monitors, and powered up using it's own power source. The oil sample requires agitation and de-gassing before carrying out the contamination test. A de-gassing kit option is available and consists of a vacuum chamber and pump. (Standard with UBS9002)

Notes

Tel: +45 63 12 83 00 | Email: ps@hymatik.com | www.hymatik.com | Hvidkaervej 27a, DK-5250 Odense SV, Denmark

icountBSplus

Bottle Sampler



In the lab or in the field monitoring

Parker Filtration's CE compliant icountBSplus is a unique and complete solution providing customers with laboratory fluid bottle sampling using proven on-board, laser based technology. icountBSplus is a next generation product from Parker's fluid particle analysis and monitoring programme and provides an effective alternative to external laboratory services.



Contact Information:

Parker Hannifin
Hydraulic Filtration

European Product Information Centre
Freephone: 00800 27 27 5374
(from AT, BE, CH, CZ, DE, EE, ES, FI, FR, IE, IT, PT, SE, SK, UK)
filtrationinfo@parker.com

www.parker.com/hfde

Product Features:

- Quick sample bottle analysis with variable test time options from 15 seconds and volume capacities from 25ml.
- Repeatable and re-producible result performance to ISO4406:1999, NAS1638 AS4509E and GOST 17216:2001 (Differential and Cumulative) particle count distributions.
- On-board compressor and 'shop' air capability.
- Environmentally controlled front-loading bottle chamber.
- Selectable 12-language instruction manual menu.
- Analysis of fluid moisture and temperature capability.
- icounBSplus has the capability for on-line fluid measurement configuration as well as off-line fluid sampling.
- Design concept allowing for portability. DC and rechargeable battery pack power option built in.
- CE compliant
- Fluid resistant touch type screen panel.
- On-board thermal printer.
- 500 test memory (fully downloadable).

icount Bottle Sampler: Advanced contamination testing

The revolutionary icountBSplus is an advanced, fully contained bottle sampling system that ensures fast, accurate and repeatable detection of contamination in hydraulic oils and hydrocarbon fuels.

Compact and portable, the icountBSplus is ideal for use in the laboratory and in on-line and off-line applications.

The system is fully accredited to all particle counting standards - ISO, NAS, AS and GOST - including the latest ISO medium dust certification and is backed by Parker Hannifin's global customer support network.

The icountBSplus uses proven laser particle detection technology, with intuitive touch screen control, integrated long life rechargeable battery and a robust easy to clean enclosure, to deliver exceptional product quality and performance.

The icountBSplus is quick to setup and use, delivers rapid test results and offers a wide range of features to help you improve the reliability, productivity and profitability of your production equipment.





The icountBSplus features a backlit 256 colour, high resolution touch screen and uses Windows® CE based menus.



Parker Hannifin
Hydraulic Filter Division Europe
FDHB500UK/icountBSplus

Wherever, whenever you need to be 100% sure of oil and fuel quality

The icountBSplus has been developed using the latest industrial design and manufacturing techniques, creating a system that integrates state of the art technology with dependable and precise measurement and analysis processes. Built by engineers, for engineers, the icountBSplus gives you a valuable and extremely effective tool for use in many different applications.



Agriculture: Designed for a wide range of agricultural machinery monitoring and testing procedures to ensure reduced downtime.



Defence: Designed for use in defence airfield fuel supply and storage points, military laboratories and equipment maintenance zones.



Aerospace: Monitoring of hydraulic ground support equipment, airframe laboratories and aerospace testing facilities.



Oil and Gas: Ideal for use in fuel refineries (DEF STAN 9191), fuel farm storage, fuel laboratories and airport fuel transfer.



Construction: Ideal for use in construction machinery development and test laboratories



Marine: Suitable for shipyard and dockyard diagnostic centres and marine service environments.



Power Generation: Suitable for monitoring hydraulic gearbox (wind energy pitch and braking systems) quality as part of a planned maintenance programme.



Industrial: Test rigs, hydraulic benches and hydraulic controlled production lines, as well as hydraulic system test laboratories, all benefit from the IBSplus.

Parker

Parker Hannifin
Hydraulic Filter Division Europe
FDHB500UK/icountBSplus

How the icountBSplus works

Our design, manufacturing and applications engineers have over 20 years experience working with advanced contamination and particle detection technologies. As a result, the latest version of the icountBSplus has been developed to meet the needs of customers throughout industry, both today and in the future.

Precision and repeatability



The icountBSplus is capable of entrapped gas suppression and automatically ensures that each oil sample is carefully regulated prior to test.

Every sample is degassed using suppressed, cleaned air and then delivered to the measurement cell through a fixed displacement pumping system.

This eliminates many of the variables associated with traditional methods of contamination monitoring. Control and accuracy is further enhanced with an easy to use interactive touch screen display.

The backlit 256 colour high resolution screen uses intuitive Windows® CE based menus for quick and simple stylus operation, with the stylus being stored neatly in the base of the icountBSplus.



Fig 4. icountBSplus test procedure schematic

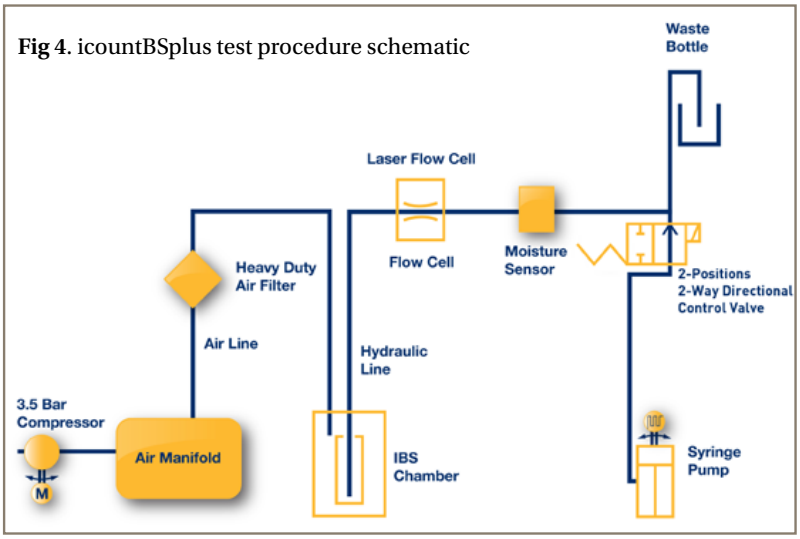

Laser power

At the heart of the system is a sophisticated laser detector, using a light obscuration flow cell, providing continuous measurement of fluid flow passing through a sample tube.

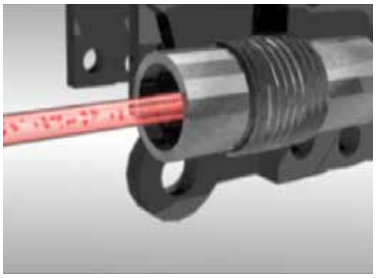

Fig 1. A controlled column of contaminated fluid enters the laser optical scanning chamber, which is designed to ensure balanced flow and fluid distribution for consistent results.

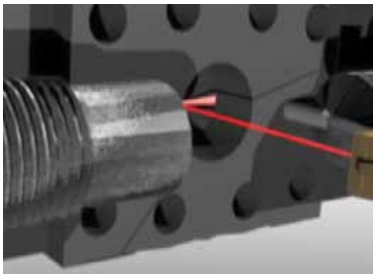

Fig 2. The laser is projected through the oil column onto a highly sensitive photo diode cell.



Fig 3. The shadow cast on the photo diode by contaminants in the oil creates a measurable change in the light intensity.

Parker Hannifin
Hydraulic Filter Division Europe
FDHB500UK/icountBSplus

Tough and reliable

The icountBSplus is built to ensure a long and trouble free operating life. Its robust moulded enclosure will withstand constant use and is easy to clean.



Fig 4. The IBSplus oil sampling probe automatically lowers into the bottle once the test begins.

For optimum operational flexibility the icountBSplus can be powered either via an internal rechargeable lithium ion battery, or direct from a mains supply.

Internally, a high filtration air line filter removes impurities from air supply, while vane-type deflectors and drain valves improve efficiency still further.



Fig 5. IBSplus' high filtration air filter.

The integrated 12VDC compressor pressurises the sampling and measurement chambers quickly, with a compact syringe pump providing consistent oil or fuel samples.



Fig 6. IBSplus' intregrated 12VDC compresser.

Benefits

- Low cost solution for monitoring fluid life and reducing machine downtime
- Easy to set up and use this CE compliant instrument
- Selectable 12 language instruction manual menu
- Optional on-line fluid measurement capability
- Independent monitoring of contamination
- Calibration to ISO procedures

Contamination Standards Table

MTD	ACFTD
ISO 4406 : 1999	ISO 4406 : 1987
NAS 1638	ISO 4406 : 1991
AS4059E (Differential)	NAS 1638
AS4059E (Cumulative)	AS4059E (Differential)
Jet Fuel (contact Parker)	AS4059E (Cumulative)
	GOST 17216 : 2001

- 8 fixed channel size analysis
- Integrated relative humidity moisture sensor
- Selectable test sample sizes: 25, 50, 75 and 100ml
- Selectable flush sample sizes: 10, 15, 20, 25, 50, 75 and 100ml
- Selectable number of samples taken in one time: 1, 2, 3, 4 or 5 tests
- Mineral fluid/fuel compatible construction
- Percentage saturation reporting (for the moisture sensor option)
- Testing capability of up to 500 continuous tests (override auto warning option available)
- Data exporting method to USB (in XML format)
- Modular design for easy servicing
- On-board high quality pump and motor configuration
- High resolution colour touch-screen panel and the IBSplus comes complete with its own stylus
- Integrated printer (selectable on/off feature)
- Self-diagnostic software
- Power-saving sleep mode with integrated wake up/power button
- On- and off-line pressure capability: see Ordering Information for options
- Integration package into the Parker MiniLab Environment: see Ordering Information for options

Features that boost your productivity



1 Wake up switch

Power button wake up switch: momentary LED illuminated switch, battery charger indicator.

2 Printer access

Internal thermal printer which uses a thermal printer paper reel.

3 Stylus holder

Plastic stylus in holder.

4 Pressure chamber

Front door with polycarbonate window.

5 High resolution touch screen

Intuitive touch screen display backlight 256 colour STN transmissive resolution – 302x3 (R.G.B) (H) X 240 (W) dots with active display area 115 (H) X 86 (W) mm. IBSplus operates on Windows® CE system.

6 Power supply

Long life regulated 12 VDC power supply, with an M12, 4 pin connector, plus a rechargeable Lithium ion battery unit for use onsite or in remote locations.

7 Body panels

Body panels are made of resin composite.

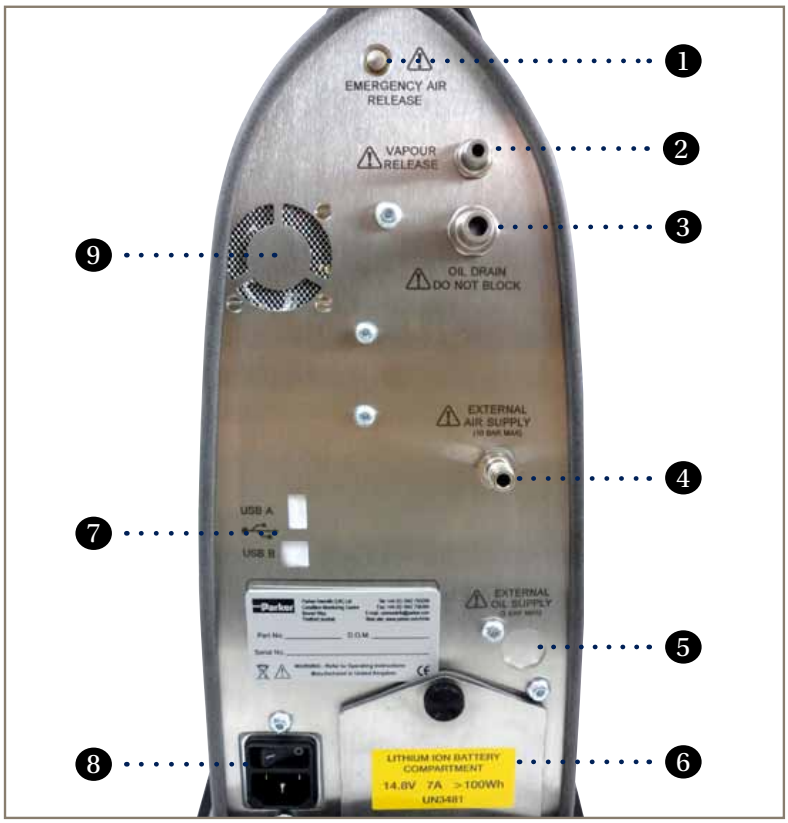

Control Panel

KEY

1. Emergency air release
2. 4mm vapour release port
3. 6mm oil drain port
4. External air supply
5. External on-line oil supply (if fitted)
6. Long life Lithium Ion battery
7. USB connections A and B
8. Mains on/off and power socket
9. Ventilation fan (DO NOT BLOCK)

Product Specification

Dimensions are given in mm (inches)



Parker Hannifin
Hydraulic Filter Division Europe
FDHB500UK/icountBSplus

Sample handling and preparation

Bottle cleanliness

Bottles should have sealing screw caps, with both parts cleaned to a suitable level in accordance with ISO3722.
Standard Parker Hannifin bottles (supplied in pairs as part number ACC6NW001) are supplied clean to ISO 13/11 or better in a Class 10,000 Clean Room. The bottle should remain capped until the time of sample filling and be re-capped immediately afterwards.



Sample mixing

Sedimentation of contaminant in a sample will occur, the rate of which is dependent upon both the fluid and particle characteristics.

Other methods of sample agitation have not been provided, as they are likely inconsistently to distort the analysis of results. Where facilities are available, mixing can be achieved using 'paint shakers' and/or an ultrasonic bath. Take care when using ultrasonic baths to avoid distortion of the result by prolonged use, which could cause the breakdown of contaminants.

Bottle samples can be sufficiently stirred by swirling and tumbling by hand, end-over-end. Samples should be analysed, without delay, once agitated.

Results

The first result from a bottle sample should be disregarded, as it could be distorted by fluid from a previous sample. Samples from different parts of a system will give different results.

Consideration should be given to what monitoring is desired and where to extract samples from for suitable trend monitoring to be performed.

It is important that whatever practices you adopt, you must perform them consistently.

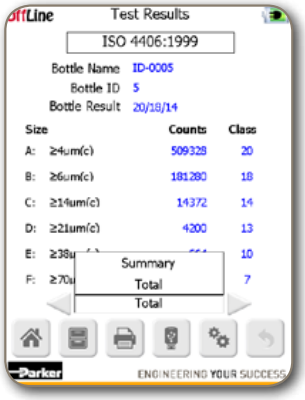

CMC Service Centres: Global Support for CMC products

Parker's fluid Condition Monitoring Service Centres can be found in ten locations around the globe, on almost every continent. Our experience and expertise in fluid condition monitoring and analysis ensure we are the authority within our industry.

Each location offers first class aftermarket support for condition monitoring products giving:

- Direct contact for end users.
- Quick and confident technical support to help you maintain an efficient and trouble free monitoring process.
- Faster turn around for annual calibration verifiation, eliminating the need for product to be returned to the country of manufacture.

Important Information

WARNING-USER RESPONSIBILITY

FAILURE OR IMPROPER SELECTION OR IMPROPER USE OF THE PRODUCTS DESCRIBED HEREIN OR RELATED ITEMS CAN CAUSE DEATH, PERSONAL INJURY AND PROPERTY DAMAGE.

- This document and other information from Parker Hannifin Corporation, its subsidiaries and authorized distributors provide product or system options for further investigation by users having technical expertise.
- The user, through their own analysis and testing, is solely responsible for making the final selection of the system and components and assuring that all performance, endurance, maintenance, safety and warning requirements of the applications are met.
- The user must analyse all aspects of the application, follow applicable industry standards, and follow the information concerning the product in the current product catalogue and in any other materials provided from Parker or its subsidiaries or authorised distributors.
- To the extent that Parker or its subsidiaries or authorized distributors provide component or system options based upon data or specifications provided by the user, the user is responsible for determining that such data and specifications are suitable and sufficient for all applications and reasonably foreseeable uses of the components or systems. The operation of the products described here in is subject to the operating and safety procedures details of which are available upon request.

Sales conditions

The items described in this document are available for sale by Parker Hannifin Corporation, its subsidiaries or its authorized distributors. Any sale contract entered into by Parker will be governed by the provisions stated in Parker's standard terms and conditions of sale (copy available upon request).

Viewing/Exporting test results



Select **Browse Tests** from the main **Test Set-up** screen.



List of **Saved Tests** is shown.



Select individual results and show date. You can double-click the test name to view that test result.



Click **Browse Tests** to view more test results.

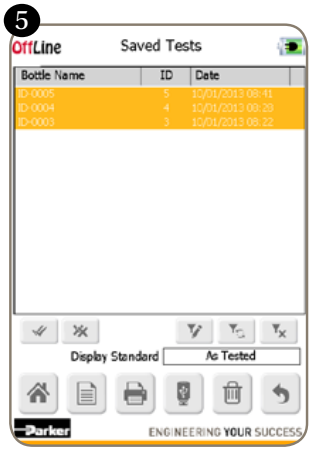

Export results: Highlight the test result(s) you would like to export using the stylus.



Plug in USB in the back of the icountBSplus.



Press **Export**. The **Export Complete** message confirms a successful export.

Test results (Importing data)

You can import the test results from the bottle sampler into a spreadsheet.

Please Note: The example shown is for Microsoft Excel®. Other spreadsheet software is available. Please contact Parker Hannifin for advice.



Plug USB drive from IBSplus into your PC.

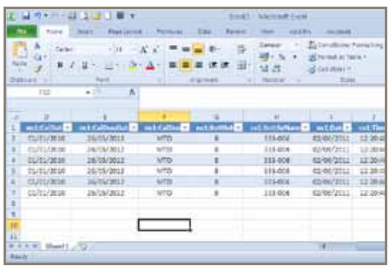

Open your PC speadsheet programme (for example Microsoft Excel®).

Tel: +45 63 12 83 00 | Email: ps@hymatik.com | www.hymatik.com | Hvidkaervej 27a, DK-5250 Odense SV, Denmark

Technical Specifications

Feature	Specification
Principle of operation	Laser diode optical detection of actual particulates
Dimensions	H 530mm x W 210mm x D 410mm
Weight	Approx 18kg
Operating temperature and humidity	+5°C to +60°C (-41°F to +140°F) 20-85% RH (tested at 30°C (86°F), non-condensing)
Storage temperature and humidity	-40°C to +90°C (-40°F to +194°F) 10-90% RH (tested at 30°C (86°F), non-condensing)
Moisture sensor calibration	±5% RH (over a compensated temperature range of +10°C to +80°C (+50°F to +176°F)
Moisture sensor stability	±2% RH typical at 50% RH in one year
International codes	ISO 7 to 21, NAS 0 to 12, AS 0 to 12
Contamination standards	Refer to Parker 'Guide to Contamination Standards' (DD0000015) on CD **MTD :** ISO 4406:1999; NAS 1638; AS4059E (Differential); AS4509E (Cumulative) **ACFTD :** ISO 4406:1987; ISO4406:1991; NAS 1638; AS4509E (Differential); AS4509E (Cumulative); GOST 17216 : 2001
Channel sizes	**Channel Sizes: MTD µm(c)** **ISO 4406:1999** / **NAS 1638** / **AS4059E (cum)** / **AS4059E (diff)** / **MTD 8 Channel** >4 µm (c) / 4-6 µm (c) / <4 µm (c) / 4-6 µm (c) / >4 µm (c) >6 µm (c) / 6-14 µm (c) / <6 µm (c) / 6-14 µm (c) / >6 µm (c) >14 µm (c) / 14-21 µm (c) / <14 µm (c) / 14-21 µm (c) / >14 µm (c) >21 µm (c) / 21-38 µm (c) / <21 µm (c) / 21-28 µm (c) / >21 µm (c) >38 µm (c) / 38-70 µm (c) / <38 µm (c) / 38-70 µm (c) / >25 µm (c) >70 µm (c) / >70 µm (c) / <70 µm (c) / >70 µm (c) / >30 µm (c) >38 µm (c) >70 µm (c) **Channel Sizes: ACFTD µm** **ISO 4406:1987** / **NAS 1638** / **AS4059E (cum)** / **AS4059E (diff)** / **GOST 17216:2001** >2 µm / 2-5 µm / >2-5 µm >5 µm / 5-15 µm / <5 µm / 5-15 µm / >5-10 µm >15 µm / 15-25 µm / <15 µm / 15-25 µm / >10-25 µm >25 µm / 25-50 µm / <25 µm / 25-50 µm / >25-50 µm >50 µm / 50-100 µm / <50 µm / 50-100 µm / >50-100 µm >100 µm / >100 µm / <100 µm / >100 µm / >100-200 µm
Calibration	**MTD :** via a certified primary ISO 11171 automatic particle detector using ISO 11943 principles, with particle distribution reporting to ISO 4406:1996 **ACFTD :** fully traceable to gravimetric first principles
Recalibration	Contact Parker Hannifin for advice
Fluid compatibility	Mineral-based oils and petroleum-based fuel - Contact Parker Hannifin for advice
Fluid management	Selectable on screen between 10 to 100ml
Viscosity range	1 to 300cSt
Working pressure	3 bar maximum input pressure, if used on-line. Contact Parker Hannifin for further advice
Flow range through icountBSplus	Test: 60ml/min
Connection interface (On Line)	INLET: 6mm push-fit, DRAIN: 4mm push-fit
Fluid operating temperature (Oil)	+5°C to +70°C (-41°F to 176°F)
Fluid operating temperature (Fuel)	+20°C to +70°C (-4°F to 158°F)
Sample bottle size	See Parker ACC Spares list. Contact Parker Hannifin for advice
Flush sample size	Selectable option within the icountBS Software: 10ml to 100ml
Memory storage	500 tests (Integrated Warning Level)
Printer	Thermal dot line printer - see ACC spares list for replacement paper
Battery type	Polymer Lithium Ion Battery pack (ACC6NW032)
Power requirements	Intergrated supply into the icountBSplus unit
Certification	CE Certified. Supplied with EC Declaration of Conformity Certificate

Tel: +45 63 12 83 00 | Email: ps@hymatik.com | www.hymatik.com | Hvidkaervej 27a, DK-5250 Odense SV, Denmark

Ordering Information

The icountBSplus is supplied with the following components:

- 250ml Bottle Kit (x2)
- Vapour/Waste Bottle (1000ml)
- 4mm and 6mm Blanking Plug
- CD manual
- UK, US and EUR Power Leads
- Spare Printer Roll
- Stylus Pen
- Battery with battery compartment panel
- Drip Tray

Key	Version		Options		Region	Part number
IBS	plus	3	Online	000	Global	IBS3000
IBS	plus	3	Offline	100	Global	IBS3100

Accessory Part Numbers

Description	Part number
Power pack (UK 2m cable)	ACC6NW023
Power pack (US 2m cable)	ACC6NW024
Power pack (EUR 2m cable)	ACC6NW025



250ml Sample bottle kit (x2)	ACC6NW001
250ml Sample bottle kit (x50)	ACC6NW002



Vapour / waste bottle ACC6NW003



Printer paper reel ACC6NW005



On-line adaptor kit* ACC6NW022

*The icountBSplus is supplied configured for on-line fluid measurement but if this is a requirement, the on-line adaptor kit option will be required.

Description	Part number
icountBSplus manual on CD	ACC6NW012



Verification Fluid SER.MISC.049



Battery Pack ACC6NW032



Pen Drive ACC6NW011



Transit Case ACC6NW020

A robust plastic storage/ presentation case is available to order as an optional accessory. *Supplied as standard with IBS3000 and IBS3100.



Tel: +45 63 12 83 00 | Email: ps@hymatik.com | www.hymatik.com | Hvidkaervej 27a, DK-5250 Odense SV, Denmark

Introducing the icount ‘Mini-lab’ – The effective way of utilising your icountBSplus

How clean is your hydraulic system?

Contamination Control is only an oil sample away with our easy, 3-Step fluid analysis service.

Step 1 **Obtain your sample of hydraulic oil.**

Step 2 **Take the 2 minute off-line oil sample test.**

Step 3 **View your results and run a report immediately.**









Kit comprises: icountBSplus. Flat-pack trolley. 30 sample bottles. Optional Laptop/software/printer and cables

Parker

Parker Hannifin
Hydraulic Filter Division Europe
FDHB500UK/icountBSplus

CMC Service Centres

Global Support for CMC products

Improving aftermarket support for condition monitoring products.

Parker's fluid Condition Monitoring Service Centres can be found currently in 12 locations around the globe, on almost every continent. Our experience and expertise in fluid condition monitoring and analysis ensure we are THE authority within our industry.

Each location offers first class aftermarket support for Condition Monitoring products, giving:

- Direct Contact for End Users.
- Quick and confident technical support to assist you in maintaining an efficient and trouble free monitoring process.
- Faster turn around for annual calibration verification, resulting in the product not having to come back to the country of manufacture.

Parker also offers on the icountACM20 laboratory unit:

- A six monthly field use verification sample for confident product performance.
- An extended two year warranty, giving confidence in product readiness.

Visit **www.parkerhfde.com/condition/service/** to find your nearest location and contact details.







Parker returns policy and calibration procedure

Each product returned to an approved Parker Service Centre will have the following:

- **A visual inspection of all case components.**

If any components from the support case require replacing, please notify the Service Centre at the time of return.

Parker holds no responsibility for case contents and will only replace parts if required or deemed necessary.

- **An external inspection of the complete assembly.**

The particle counter will be thoroughly checked for signs of damage or misuse and if necessary an estimate of the cost of repair will be provided.

- **Full functionality test.**

This includes visual inspection of internal parts and their operation.

- **Replacement of any defective or damaged parts.**

No corrective work will be carried out on the product returned without the authorization from the end user.

- **Recalibration (with a Certificate valid for 12 months).**

Each unit is calibrated to the relevant ISO standards.

The recalibration procedure does not include the replacement of any damaged components that have been deemed defective through negligence or misuse.

Single Point Sampler

Online Sampling



Lightweight and compact connection

The effective link to ensure accurate contamination monitoring

The SPS (Single Point Sampler) is a lightweight, compact and easy to use online sampling unit that connects an icountLCM20 or H_2Oil to a single pressure test point in a fluid system. Suitable for use with mineral and biodegradable oils, petroleum based and phosphate ester fluids, the SPS offers fingertip operated control even at high pressures - 420 bar (6000 PSI) rated maximum pressure.



Contact Information:

Parker Hannifin
Hydraulic Filter Division Europe

European Product Information Centre
Freephone: 00800 27 27 5374
(from AT, BE, CH, CZ, DE, EE, ES, FI, FR, IE, IT, PT, SE, SK, UK)
filtrationinfo@parker.com

www.parker.com/hfde

Product Features:

- Lightweight, compact and easy to use online sampling unit.
- Connects an icountLCM20 or H_2Oil to a single pressure test point in a fluid system.
- Suitable for use with mineral and biodegradable oils, petroleum based and phosphate ester fluids.
- 420 bar (6000 PSI) rated maximum pressure

Single Point Sampler

Online Sampling

Features & Benefits

The Single Point Sampler provides a means to connect an icountLCM20 or H_2Oil to a single pressure test point and balance the differential pressure across the system, to provide a controlled flow of oil into the icountLCM20 or H_2Oil and away into a waste oil receptacle.

- Lightweight, compact and easy to use design
- Fingertip operated control valve even at high pressures
- 420 bar (6,000PSI) rated
- Facilitates testing from large diameter pipework
- Capability to test up to 500cSt viscosity oils (pressure permitting)
- Pressure compensated flow control mechanism
- Possible to control the valve with the same level of accuracy whether the device is operating at high or low pressure
- Capable of allowing a flow rate in excess of 10ml/min when operating at any viscosity within the product specification
- Suitable for fluid temperatures from +5°C to +80°C (+41°F to +176°F)
- High quality polished finish. (stainless steel/ aircraft grade aluminium)
- Capable of working with an icountLCM20 or H_2Oil connected into a system via the standard one metre extension hose kit
- Suitable for use with mineral and biodegradable oils, petroleum based and phosphate ester fluids
- Phosphate ester version utilises the $^5/_8$" BSF HSP style fitting
- Designed so that it meets the lowest possible level of magnetic permeability
- Supplied with accessories kit
- It will maintain the set flow rate between upper and lower limits within a 100 bar inline pressure change
- Clear product identification to ensure that it is connected correctly. (i.e. downstream of the icountLCM20 or H_2Oil)



Connection Instructions

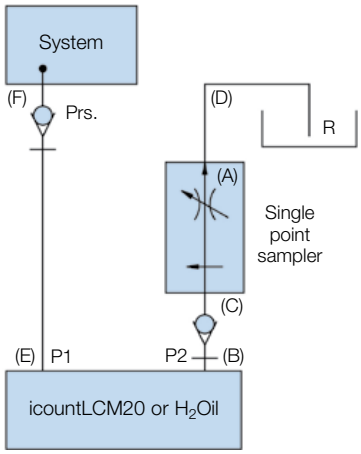

1. Ensure valve is closed (A).
2. Connect P2 on icountLCM20 or H_2Oil (B) to P2 on Single Point Sampler (SPS) (C).
3. Connect drain line on SPS (D).
4. Connect P1 of icountLCM20 or H_2Oil (E) to the system (F).
5. The SPS is ready to operate.
6. Open valve (A) slowly until the oil flows continuously from the drainline (D) into a reservoir or recepticale (R).
7. Switch on monitor and begin testing.

icountLCM20 Only

Carry out flow test as shown in the manual. If test is showing below Δt 3.6°C then carry out test as normal. If, however, test is above Δt 3.6°C then increase oil flow by turning valve (A) anticlockwise and then carry out flow test. Do this until Δt is below 3.6°C and carry out test as normal once achieved.

WARNING! Ensure that SPS valve is closed and icountLCM20 or H_2Oil is connected to the SPS BEFORE connection to system.

Parker Hannifin
Hydraulic Filter Division Europe
FDHB500UK/SPS

Specification

Fluid compatibility:
Mineral oil and petroleum based fluids (standard version). Aggressive fluid (dual seal version) for other fluids consult Parker Hannifin.

Seals:
Fluorocarbon or Perfluoroelastomer.

Maximum working pressure:
420 bar (6000 psi).

Weight:
500 grams max. (Not including hoses).

Packaging standard:
Cardboard carton (military usage - plastic carry case).

Unit size:
45mm dia x 123mm long. (1.77in dia x 4.8in long).

System connection:
Standard - M16 (G1/4" BSP) with cap,
Aggressive - 5/8" BSF HSP.

Operating temp range:
+5°C to +80°C (+41°F to +176°F).

Storage temperature range:
-26°C to +80°C (-15°F to +176°F).

Construction:
Body: Aluminium BS 1470 – pressurised end stainless steel.
Finish: Anodised blue (standard version) - Mineral Oil.
Anodised red (dual seal version) - Aggressive Oil.

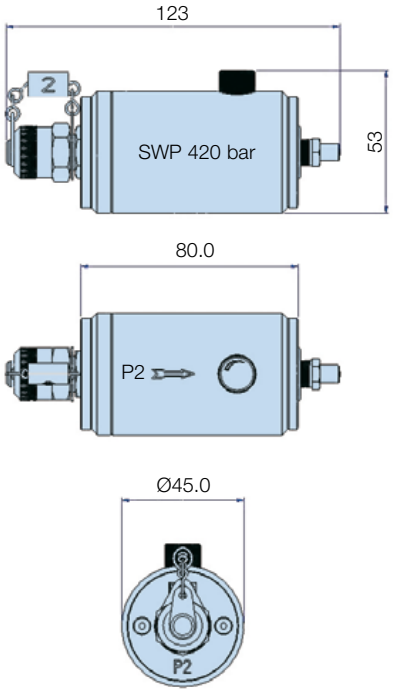

Ordering Information

Standard products table

Part number	Supersedes	Description
SPS2021	SPS.2021	Single point sampler (Mineral Oil fluids)
SPS2061	SPS.2061	Single point sampler (Aggressive/phosphate ester fluids
ACC6NW003	B84784	Waste bottle (Universal)
ACC6NH001	B84224	Extension hose/coupling (Mineral fluids)
ACC6NH002	B84225	Extension hose/coupling (Aggressive/phosphate ester fluids)
ACC6NH003	B84788	Waste hose (Mineral Oil)
ACC6NH004	B84787	Waste hose (Aggressive/phosphate ester fluids)

Note 1: Part numbers featured with bold highlighted codes will ensure a 'standard' product selection.
Note 2: Alternate displayed part number selection will require you to contact Parker Filtration for availability.

Tel: +45 63 12 83 00 | Email: ps@hymatik.com | www.hymatik.com | Hvidkaervej 27a, DK-5250 Odense SV, Denmark

System20

Inline Sensors & Monitors



A proven method of accurate condition monitoring of a system

Effective inline sensors and monitors for fluid condition monitoring

Inline System20 sensors and hand-held monitors designed to give accurate and instant fluid system readings of flow, pressure and temperature. 3 sizes of inline System20 sensor for pressures up to 420 bar, an analogue monitor that utilizes 3 day-glow gauges with protective cover. EM20 electronic monitor with full digital display and 300 test memory.



Contact Information:

Parker Hannifin
Hydraulic Filter Division Europe

European Product Information Centre
Freephone: 00800 27 27 5374
(from AT, BE, CH, CZ, DE, EE, ES, FI, FR, IE, IT, PT, SE, SK, UK)
filtrationinfo@parker.com

www.parker.com/hfde

Product Features:

- 2 types of System20 sensor are available.
  STI=industrial with reverse flow capability.
  STS=Mobile without reverse flow capability.
- 3 sizes of industrial inline System20 sensor for pressures up to 420 bar. 2 sizes of Mobile System20 sensor.
- Analogue monitor utilizes 3 day-glow gauges with protective cover.
- EM20 electronic monitor with full digital display and 300 test memory.
- For use with all mineral oils, water and oil/water emulsions.

System20

Inline Sensors & Monitors

Features & Benefits

Covering a wide range of flow rates, fluid types and applications, Parker's System 20 sensors are designed to be used with System 20 electronic or analogue monitors, icountLCM, icountPD and the H_2Oil. Specially developed System20 sensors are available for use with aggressive fluids. (EPDM Seals)

- System20 monitors, combined with the inline sensor, give the user accurate and instant readings of flow, pressure and temperature without the need for costly system downtime.
- For use with all mineral oils, water and water/oil emulsions.

Analogue Monitor

- Utilises 3 Day-Glo dial gauges with a protective hinged cover.
- Calibrated up to 380 l/min with dual scale bar/ PSI & °C/°F. (USGPM also available)

EM20 Electronic Monitor

- Gives a full digital display.
- Automatically calibrated for all 3 sizes of sensor.
- Indicates line, differential and rising peak pressure.
- Easily scrolled from metric to US.
- 300 test memory.
- Capable of downloading saved data to download software.

Typical Applications

- Drilling equipment
- Mining
- Grinding and conveying
- Industrial hydraulics
- Mobile applications

Hydraulic system users need to ensure that lost production is kept to the absolute minimum. To ensure this, predictive maintenance utilising routine condition monitoring of hydraulic systems is essential.

System20 inline sensors remain at the heart of condition and contamination monitoring. Whether you're mining the coal, building the new bypass, harvesting the crops, crossing the oceans or drilling offshore – whatever your industry, System20 represents the premier system monitoring available today.





2 sizes of System20 Inline Mobile Sensors are available

Tel: +45 63 12 83 00 | Email: ps@hymatik.com | www.hymatik.com | Hvidkaervej 27a, DK-5250 Odense SV, Denmark

System20

Inline Sensors & Monitors

Specification: Sensors

Construction:
Industrial: (STI)
Body: S/Steel 303
Internal components: S/Steel and Brass
Mobile: (STS)
Body: S/Steel 303
Internal components: Cast Aluminium and S/Steel

Flow capacities:
All suitable for use with oil, water and oil/water emulsion
Size 0: 6-25 l/min (1.58 - 6.6 US GPM)
Size 1: 20-100 l/min (5.28 - 26.41 US GPM)
Size 2: 80-380 l/min (21.13 - 100.38 US GPM)

Max. working pressure:
420 bar (6000PSI)

Capability:
Reverse flow (STI only)

Pressure drop:
At max. rated flow, Δp is 1.1 bar (mineral oil fluid at 30 cSt 140 SSU).

Ports:
Size 0: G3/8
Size 1: G¾
Size 2: G1¼

Repeatability:
±1% FSD

Accuracy:
Flow ±2.5% full scale deflection*

Weight:
Size 0: 0.5kg (1.2lbs)
Size 1: 3.5kg (8.4lbs)
Size 2: 4.4kg (9lbs)

Aggressive Fluid Applications:
EPDM internal/external seals



Dimensions (mm)

	Size	Model	AØ	B	C
Industrial	0	STI	30	95	56
	1	STI	41	137	66.5
	2	STI	66.7	231.3	73.5
Mobile	1	STS	41	105	79
	2	STS	60	165	97

System20 Saving £50,000 Pump Damage

Installing System 20 was part of a major restructuring plan to improve mining effectiveness and profitability. Machine operator training and oil storage operative training were essential elements of the plan. Prior to this investment, pump terminal damage could cost £10,000 for a replacement, over £1000 service costs and up to £39,000 in lost production. Add to this the difficulties of the mine's geography and it's easy to see the problems that have now been overcome.

System20 reduces the cost of lost Production

The mining industry puts a considerable demand on hydraulics and there are others such as agricultural machinery, harvesters or tractors and, for example, cement manufacturing plants that are equally demanding of hydraulic efficiency.

A grinding and conveying plant processes in excess of 1000 tons of ore per day in the manufacture of cement products. A days lost production costs £000's. After one year of operation the Plant Engineers decided to invest in System20 equipment, strategically placed to allow the Engineers to 'fault-find' the major components quickly and easily. The result is that downtime and loss of production have been reduced by 80%.

Ordering Information

Standard products table

Product number	Supersedes	Size	Flow range l/min	Fluid type	Port threads	Reverse Flow capability
STI0144100	STI.0144.100	0	6-25	Mineral	3/8	Yes
STI1144100	STI.1144.100	1	20-100	Mineral	3/4	Yes
STI2144100	STI.2144.100	2	80-380	Mineral	1 1/4	Yes
STI0148100	STI.0148.100	0	6-25	Aggressive	3/8	Yes
STI1148100	STI.1148.100	1	20-100	Aggressive	3/4	Yes
STI2148100	STI.2148.100	2	80-380	Aggressive	1 1/4	Yes
STS5117210	STS.5117.210	1	20-100	Mineral	3/4	No
STS5217210	STS.5217.210	2	80-380	Mineral	1 1/4	No

Note 1: Part numbers featured with bold highlighted codes will ensure a 'standard' product selection.
Note 2: Alternate displayed part number selection will require you to contact Parker Filtration for availability.
Note 3: Mobile Sensors are also available - Contact Parker
Note 4: *Accuracy 5.5% > 95 L/min. (Applies to STI1144100 and STI1148100 only)

Tel: +45 63 12 83 00 | Email: ps@hymatik.com | www.hymatik.com | Hvidkaervej 27a, DK-5250 Odense SV, Denmark

System20

EM20 Electronic Monitor

Electronic Monitor Specification

Construction:
A sealed assembly requiring no routine maintenance or adjustment. Body moulding in Acrylonitrile Butadene Styrene (ABS). Key pad moulded in silicon rubber. The monitor is suitable for use with all mineral oils, water and oil/water emulsions.

LCD details

Flow section:
The analogue flow scale has reverse flow and overflow indication and provides a percentage reading of the digital full scale display automatically calibrated for all sizes of System 20 Sensor.

Pressure section:
Designed to indicate line pressure, differential pressure and rising peak pressure. Connected to a System 20 Sensor it will monitor pressure up to 420 bar (6000 psi) with an accuracy of ±1% FSD.

Temperature section:
Temperature reading between -10°C and +110°C (14°F to 230°F).

Weight:
1.4kg (3lbs).

Data logging:
Each test logs the following data:
Test number; time & date; sensor size; media tested; flow rate, pressure & temperature.

Data download:
The System 20 electronic monitor is capable of downloading saved test data to a compatible PC via an RS232 connection using datum.

Batteries:
6 x AA batteries.

Re-calibration:
Annual certification by an approved Parker Service Centre.

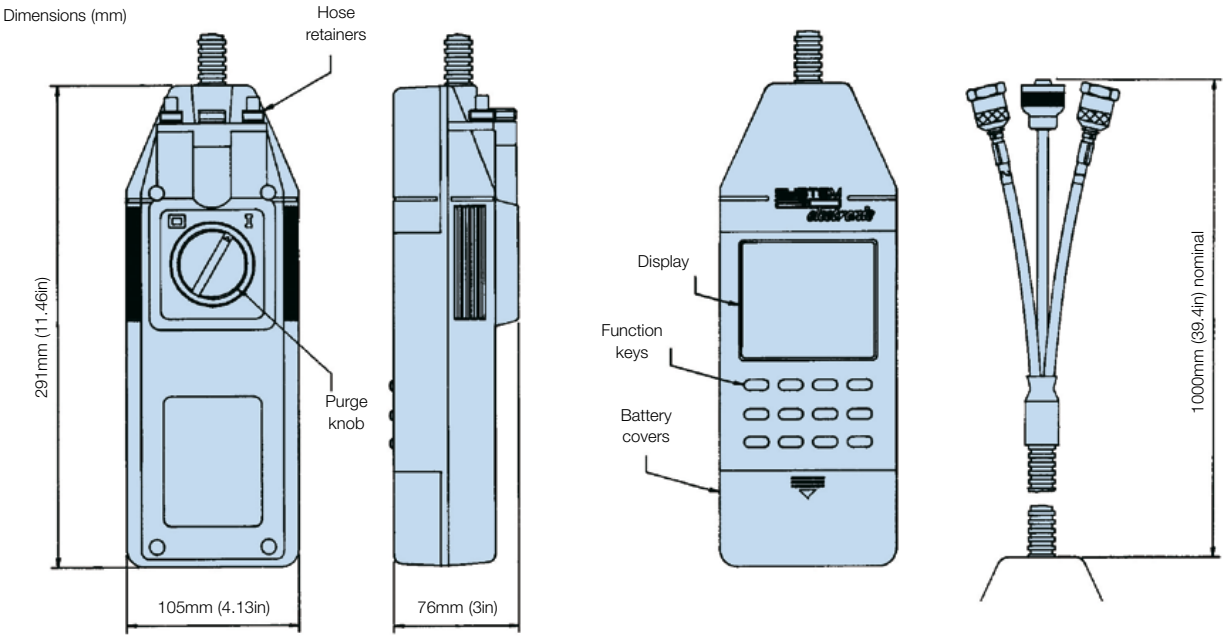

Ordering Information

Standard products table

Product number	Supersedes	Description
EM209000	EM20.9000	System 20 electronic monitor
ACC6NJ000	P653607	Transit case
ACC6NJ001	B85617	Dongle and cable assembly

Note 1: Part numbers featured with bold highlighted codes will ensure a 'standard' product selection.
Note 2: Alternate displayed part number selection will require you to contact Parker Filtration for availability.

System20
Analogue Monitor

Analogue Monitor Specification

Construction:
A sealed assembly requiring no routine maintenance or adjustment. Body moulding in Acrylonitrile Butadene Styrene (ABS). The monitor is suitable for use with all mineral oils, water and oil/water emulsions. The monitor has 3 dayglo dial gauges and features a protective hinged cover.

Gauge details

Flow section:
The flow scale has double scales for size 1 and 2 sensors only. Calibrated up to 100 l/min (26 US GPM) and 380 l/min (100 US GPM). The flow dial has excess-flow indication.

When the system is in reverse flow or when the high pressure lines to the sensor have been transposed, a 'below zero' indication is given.

Note: For measuring size Ø sensors - contact Parker

Pressure section:
Dial readings in both bar and psi up to 420 bar (6000psi).

Temperature section:
The temperature dial gives readings between -10°C and +110°C (14°F to 230°F).

Weight:
1.4kg (3lbs).

A viscosity chart is provided for mineral oil applications where monitoring is required at variable viscosities (cSt).

Dimensions (mm)

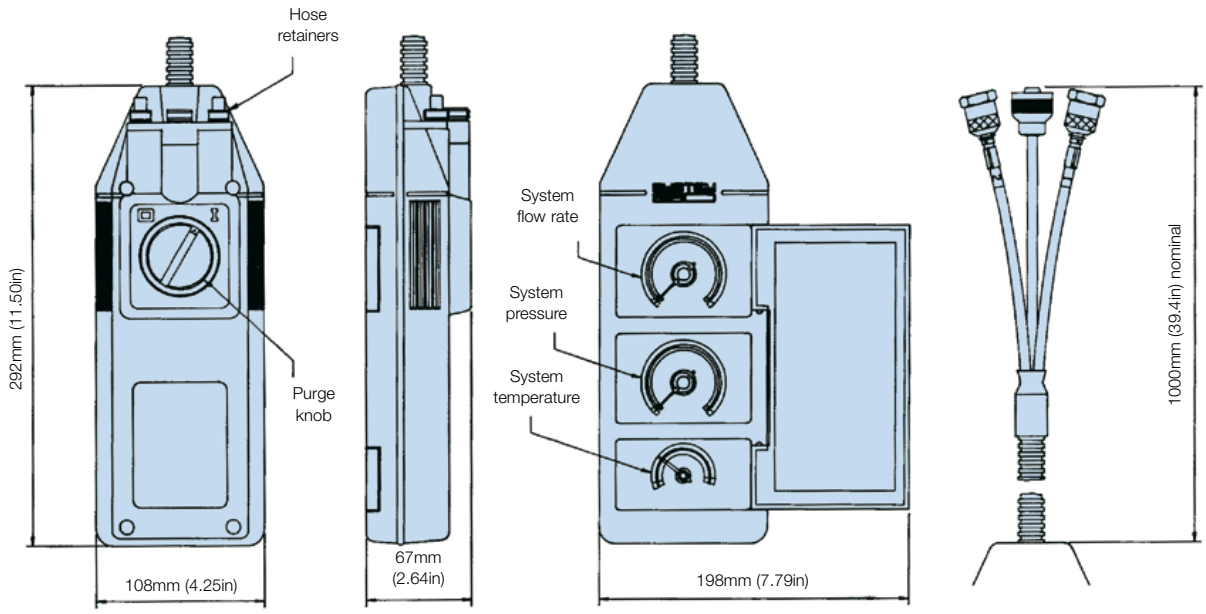

Ordering Information

Standard products table

Product number	Supersedes	Media type	Flow readings	Pressure readings	Temperature readings
STM6211110	STM.6211.110	Oil	l/min	Dual scale bar/PSI	Dual scale °C/°F
STM6611110	STM.6611.110	Oil	US GPM	Dual scale bar/PSI	Dual scale °C/°F
STM6211120	STM.6211.120	Water	l/min	Dual scale bar/PSI	Dual scale °C/°F
STM6611120	STM.6611.120	Water	US GPM	Dual scale bar/PSI	Dual scale °C/°F

Note 1: Part numbers featured with bold highlighted codes will ensure a 'standard' product selection.
Note 2: Alternate displayed part number selection will require you to contact Parker Filtration for availability.

Accessories

Product number	Supersedes	Description
ACC6NJ000	P653607	Transit case
ACC6NJ002	P653106	Metal sensor protective cap

Parker Hannifin
Hydraulic Filter Division Europe
FDHB500UK/System20

MCM20

Autoremote Particle Counter



Permanent installation ensures 24/7 monitoring of systems

Online continuous particle counting to protect fluid systems

MCM20 online continuous particle counting ensures constant system monitoring within defined parameters. PC/PLC controlled, it can be pre-set to carry out tests at specific intervals and connects permanently to a System20 sensor via a 2-metre hose assembly.



Contact Information:

Parker Hannifin
Hydraulic Filter Division Europe

European Product Information Centre
Freephone: 00800 27 27 5374
(from AT, BE, CH, CZ, DE, EE, ES, FI, FR, IE, IT, PT, SE, SK, UK)
filtrationinfo@parker.com

www.parker.com/hfde

Product Features:

- MCM20 online continuous particle counting ensures constant system monitoring within defined parameters.
- Calibration carried out to ISO11171 via ISO11943 principles. Multi-standard ISO and NAS reporting including full count/100 ml. detection at size ranges.
- Interactive handset options available for direct test sequencing, change test parameters and last test results.
- PC/PLC controlled.
- Can be pre-set to carry out tests at specific intervals.
- Connects permanently to System20 sensors via 2 metre hose assembly.

MCM20

Autoremote Particle Counter

Features & Benefits

- The MCM20 is an online continuous particle counter ensuring constant system monitoring within defined parameters.
- PC/PLC controlled
- Ensures constant system monitoring.
- Can be pre-set to carry out tests at specific intervals.
- Can be set up via optional detachable Handset.
- Enclosed in a metal casing, with internal workings on a removable chassis for ease of service and calibration.
- Connects permanently to System20 sensors via 2 metre hose assembly (supplied).
- Simple data formatting programme for trend analysis.



Typical Applications

- Test rigs
- Construction machinery
- Industrial plant
- Hydraulic equipment & system manufacturers
- Paper processing
- Steel rolling mills
- Military equipment application

The Parker MCM20

Using proven portable particle counting technology (icountLCM20), the MCM20 and its principles are available to users where continuous, permanent installed monitoring is required.

The MCM20 utilises the latest laser diode method of particle counting. The unit is enclosed in a metal casing with access to the hydraulic connection, DC input power, fuse holder and PC/PLC connection ports located on the front panel.

The internal workings are manufactured onto a removable chassis for ease of service and calibration.

Test cycle time:
Variable between 30 seconds and 3 minutes.

Repeat test time:
Continuous Mode or between 30 seconds and 1440 minutes (24 Hours).

Principle of operation:
Optical scanning analysis and measurement of actual particles.

Particle counts:
6 channels either ACFTD or MTD calibrated.

International codes:
ISO 7-22, NAS 0-12.

Storage temperature:
-40°C to +80°C (104°F to 176°F).

Operating temperature:
+5°C to +60°C (41°F to 140°F) (hydraulic oil temperature).

Unit control connection:
Terminal protocol via RS 232 or optional handset.

Data retrieval:
Local PC / PLC program or by optional handset.

Calibration:
By accepted on-line methods confirmed by relevant International Standard Organisation procedures.

Re-calibration:
Annual certification by an approved Parker Service Centre.

Max. working pressure:
420 bar (6000 PSI).

Minimum working pressure:
2 bar (29 PSI).

Fluid compatibility:
Mineral oil or petroleum based fluids.
Aggressive fluid version also available.

Sample requirements:
0.3 – 1.5 DP bar (differential pressure) via approved inline sampling concept.

System connection:
Via System 20 inline sensors / single point sampler

Computer compatibility:
Interface via RS 232 connection @ 9600 baud rate.

Weight:
8.75kg.

Power requirement:
12 Vdc input. (1.25A (T) fuse). Regulated.

Installation:
Back/base M6x1.0 mounting inserts (see annotated diagrams).

Software:
LabView demonstration software.

Dimensions (mm)

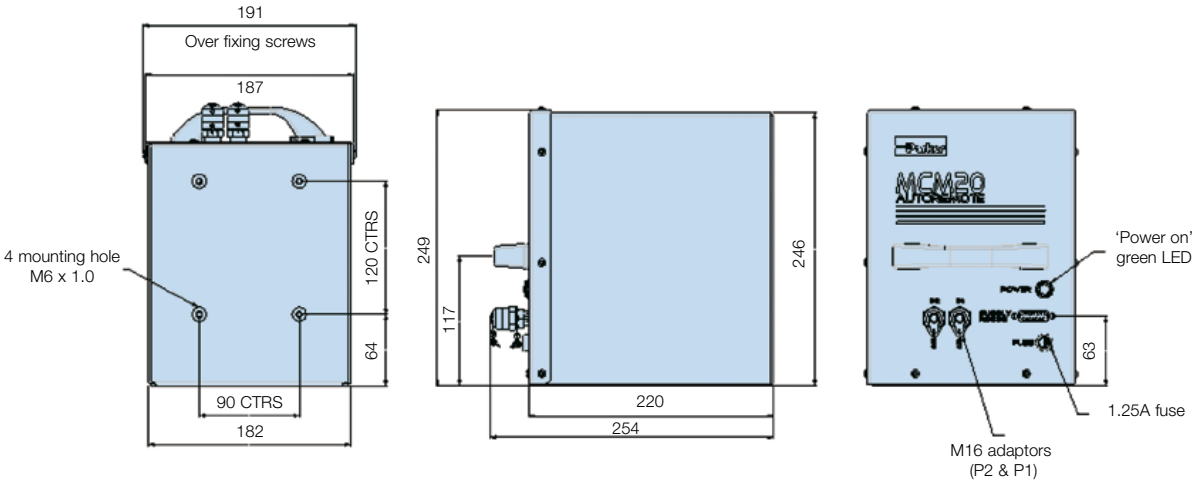

Tel: +45 63 12 83 00 | Email: ps@hymatik.com | www.hymatik.com | Hvidkaervej 27a, DK-5250 Odense SV, Denmark

MCM20

Autoremote Particle Counter

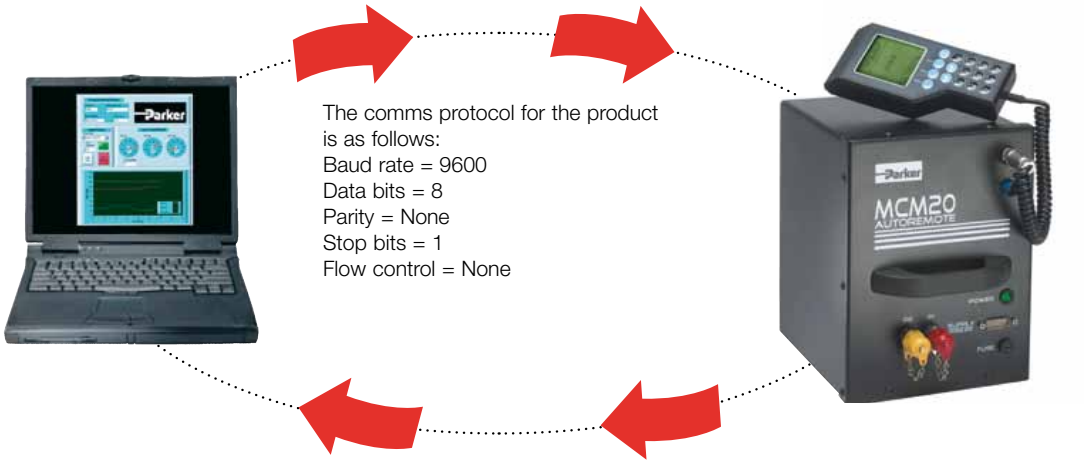

Labview



- Customised demonstration/software for MCM operation.
- Full graphic display.
- Visual indication of limit parameters.

Optional Remote Handset



Optional remote handset for direct interface control. Please consult Parker for more information.

Standard products table

Product number	Supersedes	Description
MCM202022	MCM20.2022	A/remote particle counter for mineral fluids (MTD calibrated)
MCM202022HS	MCM20.2022.HS	A/remote particle counter for mineral fluids (MTD calibrated) with Handset
MCM202021	MCM202021	A/remote particle counter for mineral fluids (ACFTD calibrated)
MCM202021HS	MCM202021HS	A/remote particle counter for mineral fluids (ACFTD calibrated) with handset
MCM202061	MCM202061	A/remote particle counter for mineral fluids (ACFTD calibrated)
MCM202061HS	MCM202062	A/remote particle counter for mineral fluids (ACFTD calibrated) with handset
MCM202062	MCM202061HS	A/remote particle counter for mineral fluids (MTD calibrated)
MCM202062HS	MCM202062HS	A/remote particle counter for mineral fluids (MTD calibrated) with handset
ACC6NB001	B94106	Handset (Blue keypad) mineral fluids
ACC6NB002	B94107	Handset (Red keypad) agressive fluids
ACC6NN003	B94802	2 meter mineral hose assembly
ACC6NN004	B94801	2 meter aggressive hose assembly

Note 1: Part numbers featured with bold highlighted codes will ensure a 'standard' product selection.
Note 2: Alternate displayed part number selection will require you to contact Parker Filtration for availability.

Tel: +45 63 12 83 00 | Email: ps@hymatik.com | www.hymatik.com | Hvidkaervej 27a, DK-5250 Odense SV, Denmark

icountPD

Online Particle Detector

For mineral oil, aggressive fluids or fuels

(ATEX approved version available. See page 476)



Independent monitoring of system contamination trends

The icountPD Particle Detector from Parker represents the most up to date technology in particle detection. The design dynamics, attention to detail and moulding compactness of the permanently mounted, on-line particle detector module, combined with on-board, laser based, leading-edge technology, brings to all industries a truly revolutionary, particle detector as a remarkable cost effective market solution to fluid management and contamination control.



icountPD for mineral oil applications

Contact Information:

Parker Hannifin
Hydraulic Filter Division Europe

European Product Information Centre
Freephone: 00800 27 27 5374
(from AT, BE, CH, CZ, DE, EE, ES, FI, FR, IE, IT, PT, SE, SK, UK)
filtrationinfo@parker.com

www.parker.com/hfde

Product Features:

- Independent monitoring of system contamination trends.
- Warning LED or digital display indicators for Low, Medium and High contamination levels.
- Visual indicators with power and alarm output warnings.
- Moisture %RH indicator (optional).
- Cost effective solution to prolong fluid life and reduce machine downtime.
- MI2 8 pin or Deutsch Connector options.
- Continuous performance for prolonged analysis.
- Fuel, Hydraulic and phosphate Ester fluid compatible construction.
- Self diagnostic software.
- Full PC/PLC integration technology such as:- RS232 and 0-5Volt, 4-20mA, CAN(J1939) (Contact Parker for other options).
- Set up and Data logging support software included.

icountPD

Online Particle Detector

Features & Benefits

Diagnostic Self Check Start-up Time:
Customer selectable 5-900 seconds
Measurement Period:
5 to 180 seconds
Reporting interval through RS232:
0 to 3600 seconds
Digital -/LED display update time:
Every second
Limit Relay Output:
Changes occur +/- 1 ISO code at set limit (Hysteresis ON) or customer set (Hysteresis OFF)
Particle / % RH Output Signal:
Continuous
Principle of operation:
Laser diode optical detection of actual particulates
International Codes:
ISO 7 – 22, NAS 0 – 12
Calibration:
By recognised online methods confirmed by the relevant ISO procedures
MTD – Via a certified primary ISO 11171 automatic particle detector using ISO 11943 principles, with particle distribution reporting to ISO 4406:1996
ACFTD – Conforming to ISO 4402 principles with particle distribution reporting to ISO 4406:1996
Recalibration:
Contact Parker Hannifin
Performance:
+/- 1 ISO Code (Dependant on stability of flow)
Reproducibility / Repeatability:
Better than 1 ISO Code
Power Requirement:
Regulated 9 to 40Vdc
Current Rating:
Typically 120mA
Hydraulic Connection:
Mineral M16x2 test Points
Aggressive: 5/8" BSF test Points
Fuel: No test Points 1/8 BSP (Female) Ports (Plugged)
Required Flow Range through the icountPD:
40 to 140 ml/min (Optimum Flow = 60ml/min)

Online Flow Range via System 20 Inline Sensors (Hydraulic systems only):
Size 0 = 6 to 25 l/min - (Optimum Flow = 15 l/min)
Size 1 = 24 to 100 l/min - (Optimum Flow = 70 l/min)
Size 2 = 170 to 380 l/min - (Optimum Flow = 250 l/min)
Required Differential Pressure across Inline Sensors:
0.4 bar (Minimum)
Viscosity Range:
1-500 cSt
Temperature:

Ambient storage temperature	-20°C to +40°C (-4°F to +104°F)
Environment operating temperature	+5°C to +60°C (+41°F to +140°F)
Fluid operating temperature	+5°C to +80°C (+41°F to +176°F)

Working pressure:
2 to 420 bar (30-6000 PSI)
Moisture sensor calibration (Not offered with the fuel version):
±5% RH (over compensated temperature range of +10°C to +80°C) (+50°F to +176°F)
Operating humidity range:
5% RH to 100% RH
Moisture sensor stability:
±0.2% RH typical at 50% RH in one year
Certification:
IP66 rated. Refer to the EC Declaration of Conformity.
EMC/RFI – EN61000-6-2:2001
EN61000-6-3:2001
Materials:
User friendly Abs construction.
Stainless Steel hydraulic block.
Dimensions:
182mm x 155mm x 86mm (7.2" x 6.1" x 3.4")
Weight:
1.3kg (2.9lb)
Seals:
Mineral: Fluorocarbon. Aggressive: EPDM. Fuel: Fluorocarbon.
Computer Compability:
Parker recommends the use of a 9-way D-type connector. This can be connected to a USB port using a USB-serial adaptor. Note that these connectors/adaptors are **NOT** supplied with icountPD units: contact Parker Hannifin for advice.

icountPD for use with aviation fuels
Field Data - Major International Airport

First 3 measurements represent fuel from a previous cargo followed by a regular clean delivery, thus demonstrating the range of fuel cleanliness being experienced at this particular location.

	>4µ	>6µ	>14µ	>21µ		>4µ	>6µ	>14µ	>21µ
Test 1	81058.3	62126.1	17817.6	6066.2	**Test 5**	1226.1	261.5	2.4	0.4
Test 2	87834.5	74763.0	35454.1	18044.4	**Test 6**	1085.7	210.9	1.3	0.1
Test 3	51383.4	32796.9	4424.8	1213.4	**Test 7**	1037.9	198.7	1.3	0.1
Test 4	1593.3	422.7	9.6	1.7					

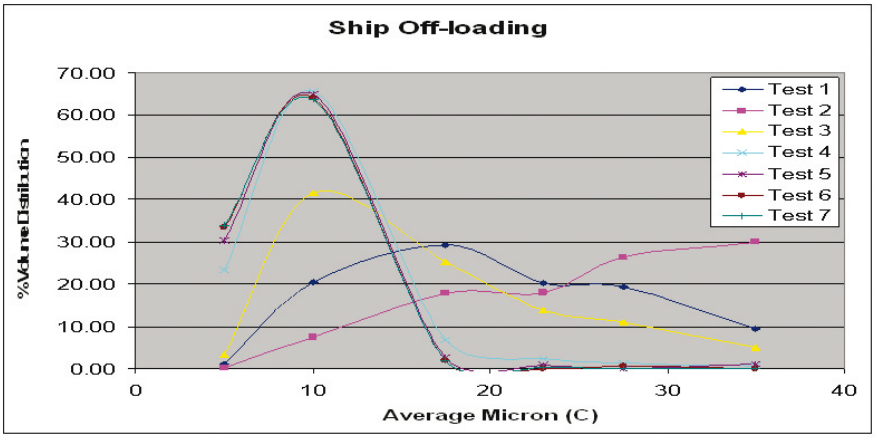



icountPD for use with aviation fuels

Tel: +45 63 12 83 00 | Email: ps@hymatik.com | www.hymatik.com | Hvidkaervej 27a, DK-5250 Odense SV, Denmark

Dimensions / Installation Details

mm
(inches)

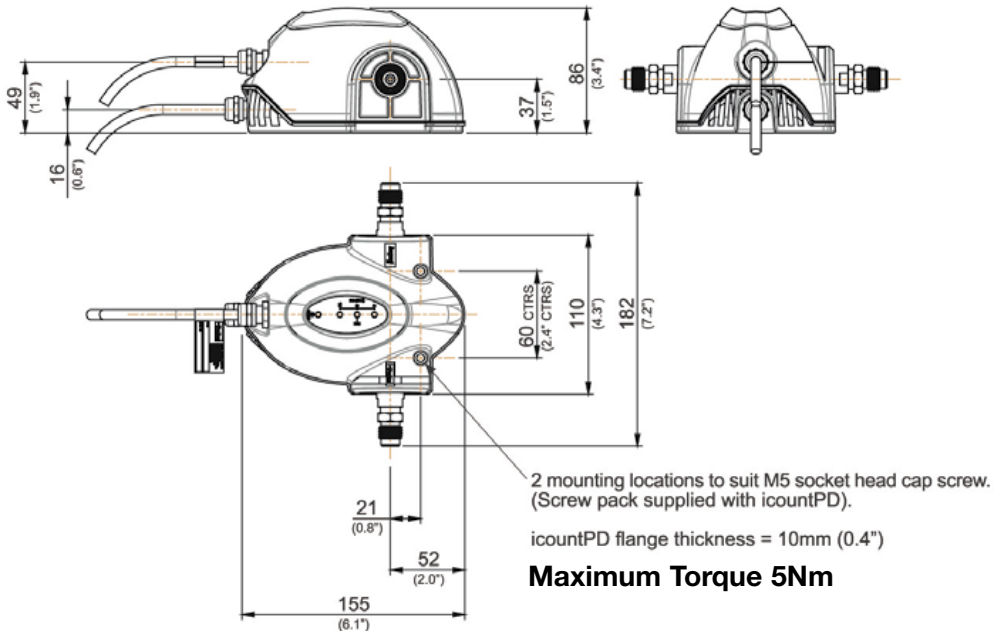

Typical Applications

- **Mobile Equipment**
  - o Earth Moving Machinery
  - o Harvesting
  - o Forestry
  - o Agriculture

Monitoring of the hydraulics, enabling the vehicles to function to their best capability under load conditions through pistons, servo valves, control rams and gear pumps.

- **Industrial Equipment**
  - o Production Plants
  - o Fluid Transfers
  - o Pulp & Paper
  - o Refineries

To monitor the cleanliness of the equipment throughout the production line, from the machine tool controlled hydraulics through to contamination of fluid transfer. Ensuring the integrity of the fluid is maintained throughout the refining process.

- **Power Generation**
  - o Wind Turbines
  - o Gearboxes
  - o Lubrication Systems

With continuous monitoring the optimum level is achieved in the least amount of time.

- **Maintenance**
  - o Test Rigs
  - o Flushing Stands

To increase efficiency of your equipment by continuously monitoring the cleanliness level of the hydraulic fluid.

- **Fuel Contamination Detection**
  - o Fuel Storage Tanks
  - o Vehicle fuel tanks
  - o Uploading fuel into an aircraft

24/7 detection of particulate levels in most fuels including aviation fuel - Jet A-1 fuel specification.

Tel: +45 63 12 83 00 | Email: ps@hymatik.com | www.hymatik.com | Hvidkaervej 27a, DK-5250 Odense SV, Denmark

Variable mA output settings

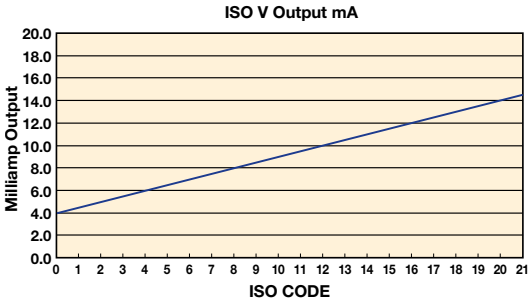

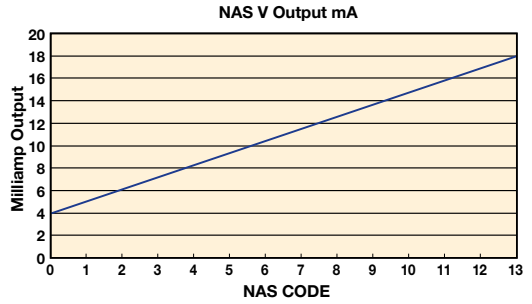

The following table can be used to equate the analogue output to an ISO or NAS Code.

Example ISO code 12 is equal to 10mA

mA	ISO
4.0	0
4.5	1
5.0	2
5.5	3
6.0	4
6.5	5
7.0	6
7.5	7
8.0	8
8.5	9
9.0	10
9.5	11
10.0	12
10.5	13
11.0	14
11.5	15
12.0	16
12.5	17
13.0	18
13.5	19
14.0	20
14.5	21
15.0	**
15.5	**
16.0	**
16.5	**
17.0	**
17.5	**
18.0	**
18.5	**
19.0	OVERRANGE
19.5	OVERRANGE
20.0	ERROR

mA	NAS
4	00
5	0
6	1
7	2
8	3
9	4
10	5
11	6
12	7
13	8
14	9
15	10
16	11
17	12
18	**
19	**
20	ERROR

The following table can be used to equate the analogue output to an ISO or NAS Code.

Example ISO code 12 is equal to 10mA

4-20mA output settings

ISO Setting

mA current = (ISO Code / 2) +4 eg. 10mA = (ISO 12 / 2) +4

or

ISO Code = (mA current - 4) *2 eg. ISO 12 = (10mA -4) *2

NAS Setting

mA current = NAS Code +5 eg. 15mA = NAS 10 +5

or

NAS Code = mA current -5 eg. NAS 10 = 15mA – 5

Variable voltage output settings

The variable voltage output option has the capability of two different voltage ranges: a 0–5Vdc range as standard, and a user-selectable 0–3Vdc range. The ‘Full list of commands’ on how to change the voltage output, are available from Parker.

The following tables can be used to relate the analogue ouptut to an ISO or NAS code.

For example, in a 0–5Vdc range, ISO code 16 is equal to an output of 3.5Vdc. In a 0–3Vdc range, ISO code 8 is equal to an output of 1.0Vdc.

Table relating ISO codes to Voltage output

ISO	Err	0	1	2	3	4	5	6	7	8	9	10	11	>
0–5Vdc	<0.2	0.3	0.5	0.7	0.9	1.1	1.3	1.5	1.7	1.9	2.1	2.3	2.5	
0–3Vdc	<0.15	0.2	0.3	0.4	0.5	0.6	0.7	0.8	0.9	1.0	1.1	1.2	1.3	

cont.

ISO	12	13	14	15	16	17	18	19	20	21	22	Err
0–5Vdc	2.7	2.9	3.1	3.3	3.5	3.7	3.9	4.1	4.3	4.5	4.7	>4.8
0–3Vdc	1.4	1.5	1.6	1.7	1.8	1.9	2.0	2.1	2.2	2.3	2.4	>2.45

Table relating NAS codes to Voltage output

NAS	Err	00	0	1	2	3	4	5	6	7	8	9	10	11	12	Err
0–5Vdc	<0.4	0.6	0.9	1.2	1.5	1.8	2.1	2.4	2.7	3.0	3.3	3.6	3.9	4.2	4.5	>4.6
0–3Vdc	<0.2	N.S.	0.3	0.5	0.7	0.9	1.1	1.3	1.5	1.7	1.9	2.1	2.3	2.5	2.7	>2.8

Tel: +45 63 12 83 00 | Email: ps@hymatik.com | www.hymatik.com | Hvidkaervej 27a, DK-5250 Odense SV, Denmark

icountPD

Online Particle Detector

Digital display parameters (ISO 4406/NAS 1638)

Start up

1. Once the icountPD has been connected to a regulated power supply, the product logo is displayed for approximately five seconds as the icountPD performs a self system diagnostic check.
2. The icountPD then automatically starts monitoring using factory default test parameters.



Digital display indication

The digital display will show the actual measured codes, the channel (µ) size and the user definable limits. Note that the channel size and limits are displayed alternately.

The Moisture Sensor reading (%RH) will also be shown – if the Moisture Sensor option is fitted.

The order of trigger for both the codes and Moisture Sensor option is:

- Solid digit(s) = code(s) that are at or below the set point (limit)
- Flashing digit(s) = code(s) that are above the set point (limit)

The display for ISO4406 and NAS1638 are identical.

Error detection:

In the unlikely event of a error occurring, the digital display on the icountPD will simply display the actual error code only – i.e. ERROR 13 (A full list of error codes are detailed in the icountPD User Manual).

Moisture sensor output settings

The Moisture Sensor is an option that can be included when ordering the icountPD.
The Moisture Sensor reports on the saturation levels of the fluid passing through the icountPD sensing cell.
The output is a linear scale, reporting within the range of 5% saturation to 100% saturation.

Table relating Saturation levels in the sensing cell to icountPD outputs

Saturation	4–20mA	0–3Vdc	0–5Vdc
5%	4.8	0.15	0.25
25%	8	0.75	1.25
50%	12	1.50	2.50
75%	16	2.25	3.75
100%	20	3.00	5.00

Flow control ACC6NN019

A pressure compensated, flow control device (Parker Hannifin part number ACC6NN019) has been develop to give the icount PD greater flexibility.

The flow control device enables testing where flow ranges are out side the icountPD specification i.e. (40 – 140 ml/min), or where pipe diameters do not allow the icountPD to be installed.

The flow control device fits onto the downstream (outlet) side of the icountPD. A 06L EO 24 deg cone and hydraulic adaptor is supplied which enables connection directly to the icountPD. Alternatively the flow control device can be fitted further down stream.

The compact design requires no setting up or further user intervention as long as the system conditions remain within the recommended pressure and viscosity ranges as below.



P/N ACC6NN019

Working pressure range	10 to 300 bar
Differential pressure range	10 to 300 bar
Working viscosity range	10 to 150 Cst

icountOS – Oil Sampler (IOS)

- New and under development in the detection of contaminates distribution in various Aviation fuels.
- Portable monitoring tool providing fluid qualification to ISO 4406:1999 standards.
- Supplements the icount LCM20 and ACM20 product portfolio.
- Quick, simple to use monitoring tool for sampling fluids from containers, fuel bunkers and holding tanks.
- Field solution to Laboratory methods for the detection of solid contamination and free water inference.



icountPD

Online Particle Detector

Hydraulic Connection Diagram

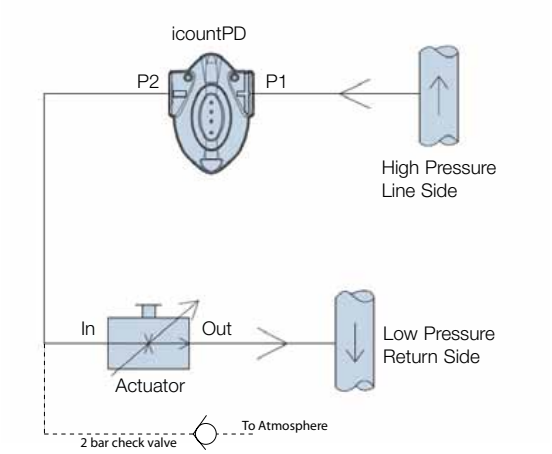

Dimensions

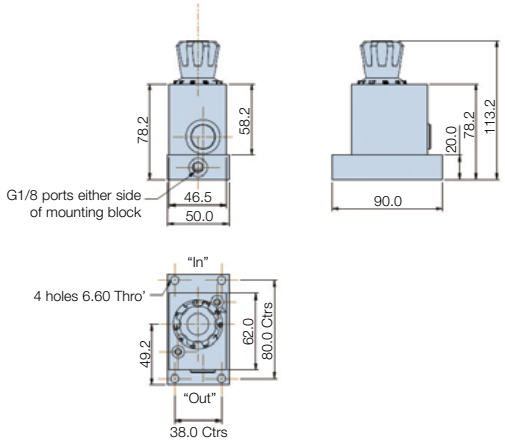

Flow Control Actuator Specification (P/N S840074)

Operation	Manual flow rate adjustable via control knob
Mounting Type	4 off mounting holes to suit M6 screws (not supplied)
Mounting position	Any
Weight	1.7kg (3.7lb)
Fluid Temperature	5°C to +80°C (+41°F to 176°F)
Ambient storage temperature	-20°C to +40°C (-4°F to +104°F)
Viscosity range	20cSt to 500cSt (If lower than 20cSt contact Parker)
Differential pressure range	5 to 315 bar
Maximum pressure	315 bar
Flow direction	'IN' to 'OUT' flow control function
Port thread detail	1/8" BSPP (test points not supplied)
Internal Seals	Fluoroelastomer



This application shows uploading fuel into an aircraft with the icountPD in use to monitor as a 'go/no go' device.

Communication Options

The icountPD may be configured using the icountPD Setup Utility. For more direct control of the device using its communications protocol, you may also use the Microsoft Windows® HyperTerminal program, but note that this program is not currently supplied with the Windows Vista™ operating system. These two ways of communicating with icountPD are described in the following section.

icountPD Setup Utility software (supplied)

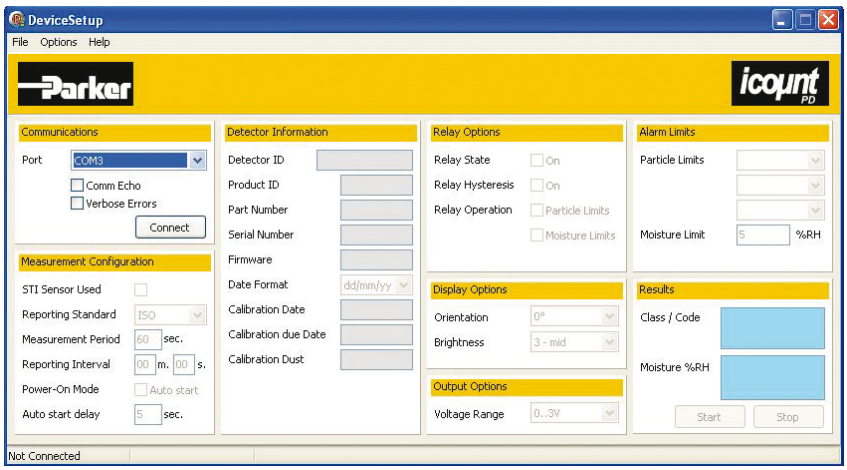

Communication Protocol

The Communication protocol for the serial communication link is to be used with **Microsoft Windows HyperTerminal**. The settings are as follows:

Baud rate	9600
Data bits	8
Parity	None
Stop bits	1
Flowcontrol	None

The commands used with this product are made up of Read, Set and Start / Stop commands.

- Set commands allow the value or values of parameters to be set
- Read commands allow the value or values or parameters to be read
- Start/Stop allows the user to start and stop tests.

Example:

[SDF dd/mm/yy] - sets the date format.

[RDF] - reads the product date format.

All commands are sent in ASCII characters, and the protocol accepts both upper and lower case characters as the examples below:

SDF

SdF

Note: A full list of commands are detailed in the user manual

Tel: +45 63 12 83 00 | Email: ps@hymatik.com | www.hymatik.com | Hvidkaervej 27a, DK-5250 Odense SV, Denmark

icountPD

Online Particle Detector

Ordering Information

Standard Products Table

Part number	Fluid type	Calibration	Display	Limit relay	Communication	Moisture	Cable connector kit
IPD12222130	Mineral	MTD	LED	YES	RS232 / 4 - 20mA	NO	M12, 8 pin plug connector
IPD12222230	Mineral	MTD	LED	YES	RS232 / 4 - 20mA	YES	M12, 8 pin plug connector
IPD12223130	Mineral	MTD	LED	YES	RS232 / 0 - 5V	NO	M12, 8 pin plug connector
IPD12223230	Mineral	MTD	LED	YES	RS232 / 0 - 5V	YES	M12, 8 pin plug connector
IPD12322130	Mineral	MTD	Digital	YES	RS232 / 4 - 20mA	NO	M12, 8 pin plug connector
IPD12322230	Mineral	MTD	Digital	YES	RS232 / 4 - 20mA	YES	M12, 8 pin plug connector
IPD12323130	Mineral	MTD	Digital	YES	RS232 / 0 - 5V	NO	M12, 8 pin plug connector
IPD12323230	Mineral	MTD	Digital	YES	RS232 / 0 - 5V	YES	M12, 8 pin plug connector

Product Configurator

Key	Fluid type	Calibration	Display	Limit relay	Communication	Moisture	Cable connector kit
IPD	**1 Mineral**	**2 MTD**	2 LED	**2 Yes**	**2 RS232 / 4-20mA**	1 No	10 Deutsch 12-pin DT Series connector
	2 Phosphate ester		3 Digital		**3 RS232 / 0-5V**	**2 Yes**	**30 M12, 8 pin plug connector**
	3 Aviation fuel (4 channel)				5 RS232/CAN-bus (J1939)		

Note - Aviation Fuel option can also be used for Diesel fluids
Note - RS485 option - communication up to 5000 Meters - Contact Parker
Note - Wireless communication (GPRS - LAN - WiFi - Sat) - Contact Parker

Accessories

Part number		Description
Mineral fluids	Aggressive fluids	
ACC6NE003	ACC6NN002	1 metre hose length
ACC6NN003	ACC6NN004	2 metre hose length
ACC6NN005	ACC6NN006	5 metre hose length
ACC6NN007	ACC6NN008	1/4" BSP fitting
ACC6NN009	ACC6NN010	1/8" BSP fitting
ACC6NN011	ACC6NN012	1/8" BNPT fitting
SPS2021	SPS2061	Single point sampler
S840074	Contact Parker	Flow control device
ACC6NN019	Contact Parker	Flow control valve
ACC6NN013		12 volt regulated power supply
ACC6NN014	Contact Parker	2 x 5 metre M12 - 8 pin cable kit*
ACC6NN016		Deutsch Connector Kit
ACC6NN017		RS232 To USB cable kit
ACC6NN018		M12 - 8 pin to RS232 engineers tool

* M12 Cable kit consists of two 5 metre cables to enable all output options (Communications cable and Relay/Power Supply cable)
* * Note that the aggressive fluid hoses are provided as a single hose, not in pairs.
Note: For details on the icountPD Z2 ATEX approved particle detector see page 457.

Part number	Supersedes	Size	Flow range l/min	Fluid type	Port threads	Reverse Flow capability
STI0144100	STI.0144.100	0	6-25	Mineral	3/8	Yes
STI1144100	STI.1144.100	1	20-100	Mineral	3/4	Yes
STI2144100	STI.2144.100	2	80-380	Mineral	1 1/4	Yes
STI0148100	STI.0148.100	0	6-25	Aggressive	3/8	Yes
STI1148100	STI.1148.100	1	20-100	Aggressive	3/4	Yes
STI2148100	STI.2148.100	2	80-380	Aggressive	1 1/4	Yes
STS5117210	STS.5117.210	1	20-100	Mineral	3/4	No
STS5217210	STS.5217.210	2	80-380	Mineral	1 1/4	No

icountPDR

Robust Online Particle Detector



Customer Value Proposition

The icountPDR Robust Particle Detector from Parker represents the most up to date technology in particle detection. The design dynamics, attention to detail and moulding compactness of the permanently mounted, on-line particle detector module, combined with on-board, laser based, leading-edge technology, brings to all industries a truly revolutionary, particle detector as a remarkable cost effective market solution to fluid management and contamination control.



icountPDR for mineral oil applications

Contact Information:

Parker Hannifin
Hydraulic Filter Division Europe

European Product Information Centre
Freephone: 00800 27 27 5374
(from AT, BE, CH, CZ, DE, EE, ES, FI, FR, IE, IT, PT, SE, SK, UK)
filtrationinfo@parker.com

www.parker.com/hfde

Product Features:

- Independent monitoring of system contamination trends.
- Rugged design ensures protection against environmental exposure.
- Small and compact device constructed in SS.
- Moisture %RH indicator (optional).
- Cost effective solution to prolong fluid life and reduce machine downtime.
- Continuous performance for prolonged analysis.
- Fuel, Hydraulic and phosphate Ester fluid compatible construction.
- Self diagnostic software.
- Full PC/PLC integration technology such as:- RS232 and 0-5Volt, 4-20mA, CAN(J1939) (Contact Parker for other options).
- Set up and Data logging support software included.

icountPDR

Robust Online Particle Detector

Feature	Specification
Product start-up time	5 seconds minimum
Measurement Period	5 to 180 seconds
Reporting interval	0 to 3600 seconds via RS232 communication
Principle of operation	Laser diode optical detection of actual particulates
International Codes	ISO 7 – 22, NAS 0 – 12
Calibration	By recognised online methods confirmed by the relevant ISO procedures: **MTD** – Via a certified primary ISO 11171 automatic particle detector using ISO 11943 principles, with particle distribution reporting to ISO 4406:1996
Recalibration	Contact Parker Hannifin
Working pressure	2 to 420 bar (30-6000 PSI)
Flow Range through the icountPDR	**Note:** Flow may be bi-directional 40 to 140 ml/min (Optimum Flow 60ml/min) (0.01 – 0.04 USGPM (optimum flow 0.016 USGPM))
Online Flow Range via System 20 Sensors	Size 0 = 6 to 25 l/min (2-7 USGPM) Size 1 = 24 to 100 l/min (6-26 USGPM) Size 2 = 170 to 380 l/min (45-100 USGPM)
Ambient storage temperature	-40°C to +80°C (-40°F to +176°F)
Environment operating temperature	-30°C to +60°C (-22°F to +140°F)
Fluid operating temperature	+5°C to +80°C (+41°F to +176°F)
Computer Compability	Parker recommends the use of a 9-way D-type connector. This can be connected to a USB port using a USB-serial adaptor. Note that these connectors/adaptors are **NOT** supplied with icountPDR units: contact Parker Hannifin for advice.
Moisture sensor calibration	±5% RH (over compensated temperature range of +10°C to +80°C; (+50°F to +176°F)
Operating humidity range	5% RH to 100% RH
Moisture sensor stability	±0.2% RH typical at 50% RH in one year
Power Requirement	Regulated 9 to 40Vdc
Current Rating	Typically 120mA
Certification	IP69K rating. EC Declaration of Conformity

Analogue output options (specified when ordering)

Variable current	4–20mA
Variable voltage	0–5Vdc, 0–3Vdc (user selectable)
CAN-bus	to SAE J1939 (e.g. Parker IQAN)
Moisture sensor	Linear scale within the range 5% RH to 100% RH

Flow control

LOW TO MEDIUM VISCOSITY FLOW CONTROL OPTION

A pressure compensated, flow control device (Parker Hannifin part number ACC6NN023) has been developed to give the icountPDR user greater flexibility. The flow control device enables testing where flow ranges are outside the icountPDR specifications (i.e. 40–140 ml/min), or where pipe diameters do not allow the icountPDR to be installed.

The flow control device fits onto the downstream (outlet) side of the icountPDR. A 06L EO 24deg cone end hydraulic adaptor is supplied which enables connection directly to the icountPDR. Alternatively the flow control device can be fitted further down stream.



The compact design requires no setting up or further user intervention as long as the system conditions remain within the recommended pressure and viscosity ranges as below.

Working pressure range	10 to 300bar
Differential pressure range	10 to 300bar
Working viscosity range	10 to 150 Cst

Tel: +45 63 12 83 00 | Email: ps@hymatik.com | www.hymatik.com | Hvidkaervej 27a, DK-5250 Odense SV, Denmark

Dimensions / Installation Details

Dimensions are given in mm (inches)

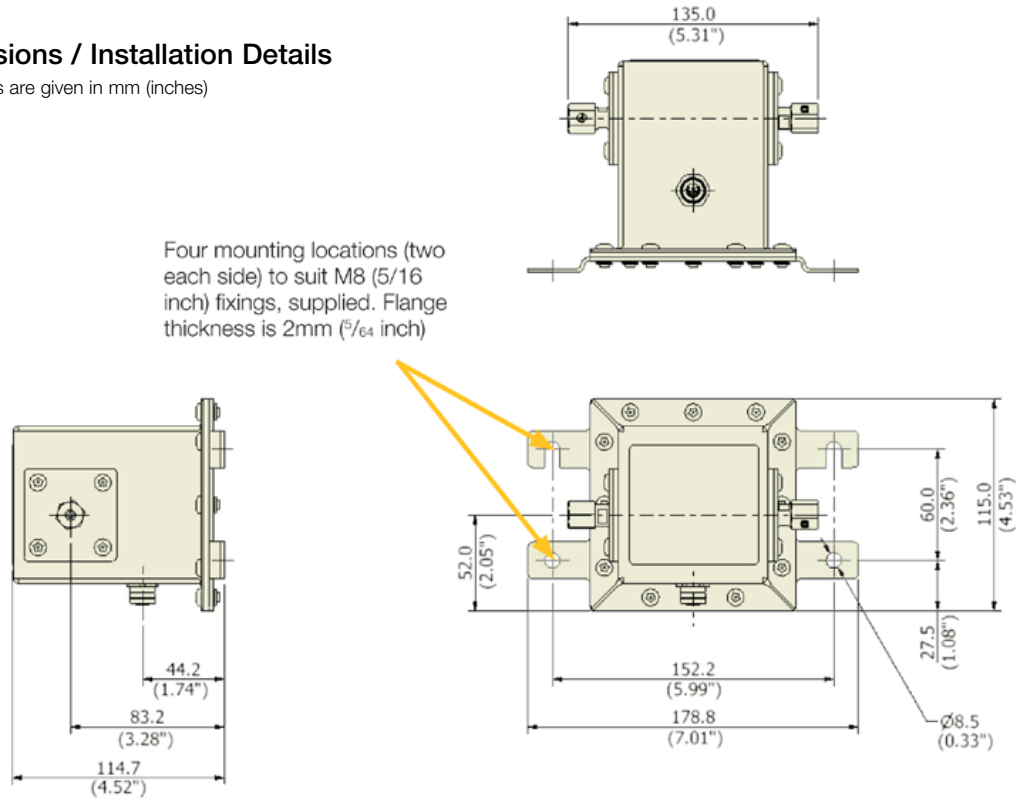

Typical Applications

- **Mobile Equipment**
  - o Earth Moving Machinery
  - o Harvesting
  - o Forestry
  - o Agriculture

Monitoring of the hydraulics, enabling the vehicles to function to their best capability under load conditions through pistons, servo valves, control rams and gear pumps.

- **Industrial Equipment**
  - o Production Plants
  - o Fluid Transfers
  - o Pulp & Paper
  - o Refineries

To monitor the cleanliness of the equipment throughout the production line, from the machine tool controlled hydraulics through to contamination of fluid transfer. Ensuring the integrity of the fluid is maintained throughout the refining process.

- **Power Generation**
  - o Wind Turbines
  - o Gearboxes
  - o Lubrication Systems

With continuous monitoring the optimum level is achieved in the least amount of time.

- **Maintenance**
  - o Test Rigs
  - o Flushing Stands

To increase efficiency of your equipment by continuously monitoring the cleanliness level of the hydraulic fluid.

- **Fuel Contamination Detection**
  - o Fuel Storage Tanks
  - o Vehicle fuel tanks
  - o Uploading fuel into an aircraft

24/7 detection of particulate levels in most fuels including aviation fuel - Jet A-1 fuel specification.

Tel: +45 63 12 83 00 | Email: ps@hymatik.com | www.hymatik.com | Hvidkaervej 27a, DK-5250 Odense SV, Denmark

icountPDR

Robust Online Particle Detector

Connections

Variable current output settings

See page 440 (icountPD) for tables and graphs that can be used to relate an analogue output (in mA) to an ISO and NAS code.

Variable voltage output settings

See page 440 (icountPD) for tables that can be used to relate the analogue output to an ISO and NAS code.

Ordering Information

Product Configurator

Key	Fluid type		Calibration		Display		Limit Relay		Communication		Moisture sensor		Cable connector kit	
IPDR	1	Mineral	2	MTD	1	None	1	No	2	RS232 / 4-20mA	1	No	40	M12, 12 pin plug connector
	3	Aviation fuel (4 channel)							3	RS232 / 0-5V	2	Yes	10	Deutsch 12-pin DT series connector
									5	RS232/CAN-bus				

Standard Products Table

Part number	Fluid type	Calibration	Display	Limit relay	Communication	Moisture	Cable connector kit
IPDR12112140	Mineral	MTD	None	No	RS232 / 4 - 20mA	No	M12, 12 pin plug connector
IPDR12112240	Mineral	MTD	None	No	RS232 / 4 - 20mA	Yes	M12, 12 pin plug connector
IPDR12113140	Mineral	MTD	None	No	RS232 / 0 - 5V	No	M12, 12 pin plug connector
IPDR12113240	Minera	MTD	None	No	RS232 / 0 - 5V	Yes	M12, 12 pin plug connector

Accessories

Part number	Description
ACC6NN013	12Volt regulated power supply EUR, UK, USA Set
ACC6NN023	Flow control valve, industrial fittings tube 06L-G1/8A-M16 connector
ACC6NN017	1m RS232 TO USB CABLE KIT
ACC6NN024	5m M12 - 12 PIN CABLE FEMALE
ACC6NN035	M12 12 PIN - 12 PIN Deutsche cable

icountOS

Oil Sampler



Portable condition monitoring for hydraulic oil and fuel systems

The icountOS (Oil Sampler) from Parker offers users a compact, lightweight, robust and truly portable oil and fuel sampling and analysis solution that is both quick to use and accurate in its results. Utilising on-board, laser based, leading-edge technology, the IOS brings to all industries a truly innovative portable oil sampler as a remarkable, cost effective market solution to fluid management and contamination control.



Contact Information:

Parker Hannifin
Hydraulic Filtration

European Product Information Centre
Freephone: 00800 27 27 5374
(from AT, BE, CH, CZ, DE, EE, ES, FI, FR, IE, IT, PT, SE, SK, UK)
filtrationinfo@parker.com

www.parker.com/hfde

Product Features:

- Fluid viscosity as high as 300cSt (usable range) will be able to pass through the detector at the proper flow rate.
- Quick connections for testing hydraulic fluid online and offline.
- Reporting Standards ISO4406:1999, NAS1638 and RH% moisture sensor display in high intensity OLED format.
- Data Storage up to 250,000 test points of information.
- Compact, lightweight and robust, truly portable IOS makes field analysis simple, quick and easy.
- Able to sample directly from a hydraulic reservoir, barrel and vehicle fuel tank or from a high pressure, online hydraulic system with the addition of a pressure reducing adaptor.
- Completely self contained, with laser detection particle counter (icountPD), rechargeable battery and flow management pump.
- No special software needed. Embedded web page generator for data download onto any PC or laptop via a universal RJ45 connection interface.
- Fast detection of the presence of contamination with a sampling period from 5 seconds to 999 seconds.

Accurate condition monitoring made quick, simple and cost effective

The icountOS (IOS) is an innovative solution to the challenge of measuring the quality of hydraulic oils and hydrocarbon fuels in many different applications: from renewable energy, marine and offshore, to manufacturing, mobile, agriculture, military and aerospace.

Compact, lightweight and robust, the truly portable IOS makes field analysis simple, quick and easy.

Able to sample directly from a hydraulic reservoir, barrel, vehicle fuel tank or from a high pressure online hydraulic system with the addition of a pressure reducing adaptor; the IOS is undoubtedly the most adaptable contamination service tool available today.

The system is completely self contained, with laser detection particle counter, battery and pump plus memory with web page generator for data download onto any PC or laptop - combined into a single unit.

The IOS uses Parker's proven laser detection technology, which delivers precise, repeatable, reproducible results, in real time detection of both particulates, down to 4 microns (c) and dissolved water.

Just as importantly, the IOS has been developed to offer a wealth of features, combined with simplicity and ease of use, at a cost that is far lower than competing systems, and which fits within most maintenance budgets.





Powerful and easy to use



Lightweight and portable

Wherever, whenever you need to be 100% sure of oil and fuel quality

With its robust carrying case, sealed to IP67, and proven laser and diagnostics technologies, the IOS is the perfect tool for maintenance and plant engineers to use with all fixed and mobile plant and machinery.

IOS technology is proven in many different applications, under the most demanding conditions, and is used by leading companies around the world.



In the construction and mining sector, IOS is ideally suited to service and fluid monitoring of essential equipment and services.



Dans l'industrie de la défense, l'IOS fournit un soutien de contrôle d'état essentiel pour les chars de combat destinés à opérer sur la ligne de front et des véhicules militaires en missions critiques.



The IOS is the primary diagnostic instrument to help automotive manufacturers develop predictive monitoring programmes.



Ease of on-site use, light weight and portability are key IOS features for monitoring fuel quality in military bulk fuel installations in theatre.



Accuracy and speed of use make the IOS ideal for wind turbine engineers, for both routine maintenance and emergency repairs, flushing and commissioning.



In the aviation sector, the ability to meet strict quality controls makes the IOS the ideal choice for ground handling support companies, ensuring clean and dry fuel deliverance.

How the IOS works

The IOS quality condition monitor for hydraulic oils and hydrocarbon fuels uses advanced technology to produce extremely repeatable results.

At the heart of the system is a sophisticated laser detector, using a light obscuration flow cell, providing continuous measurement of fluid flow passing through a sample tube.

Measurements are taken every second as standard, although measurement intervals and test period can be defined by the user, with results being reported immediately and updated in real time.

Data is displayed on a built-in OLED digital display and can also be stored for subsequent upload via the embedded icount's web page interface connecting through an RJ45 cable.



Hydraulic circuit

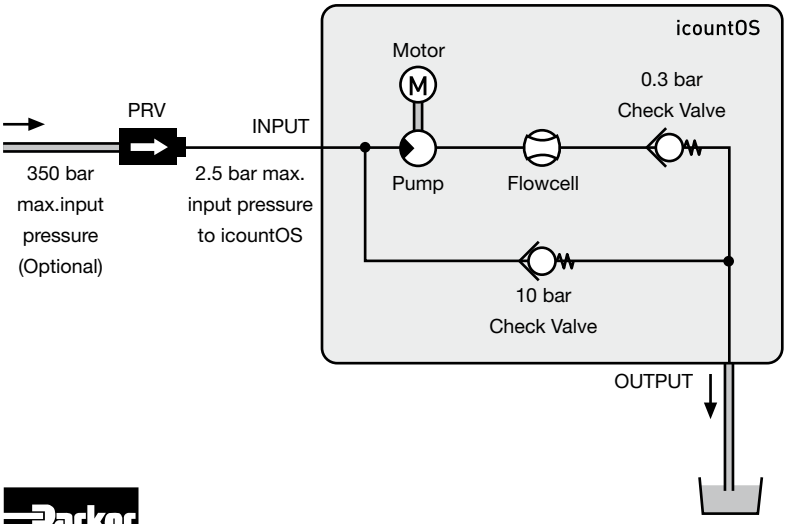

Proven laser detection technology

Parker's experience in developing laser light obscuration or blockage and applying that technology in portable particle counting and detection is what makes Parker's range of contamination analysers so very special.

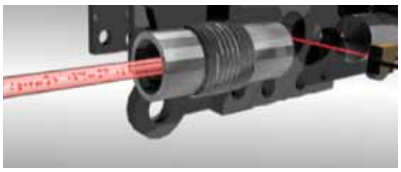

Fig 1. In simple terms a controlled column of contaminated fluid enters the laser optical scanner chamber. This design maintains contamination distribution within the fluid.

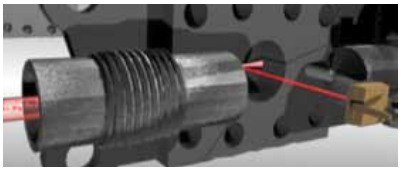

Fig 2. On reaching the photo diode cell, the highly accurate laser light is applied and projected through that oil column. The laser diode projects an image of the sample onto a photo diode cell.

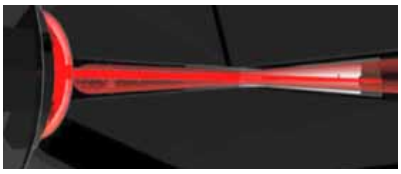

Fig 3. A cast image or shadow created by the contaminant in the oil creates a measurable change in the light intensity.

Features that boost your productivity



Proven laser detection technology

The IOS uses light obscuration, light blockage technology. A light source is projected through a moving column of oil or fuel. Contaminants in the fluid interrupt the light beam, casting images on a photo diode cell, where the resulting change in light intensity produces a directly proportional change in electrical output.

High onboard test data storage capacity

Class leading onboard memory provides storage capacity for up to 250,000 sets of test results. Data is displayed instantly, stored or downloaded to a PC or laptop for analysis via a standard IP68 RJ 45 patch cord connection; a 2m cable is supplied as standard. (File types - text/CSV or XMI)

Tough storm casing

The robust waterproof IP54 (When open) case and fully sealed impact resistant brushed stainless steel front panel provide excellent protection in the most demanding of applications. The combined unit weighs under 5.5kg, making it an ideal 'first use' diagnostic service tool.

Fast contamination detection

The IOS provides fast detection of the presence of contaminants, with the results being shown on the front panel mounted, high visibility OLED digital display. This provides easy identification of fluid condition, showing measured codes, the sizes per channel in
microns (c), the user definable limits and moisture sensor readings
as a % of relative humidity..

Quick connection

Connecting the IOS is quick and reliable. The fluid connectors are on the front panel, with two secure push fittings: 6mm diameter inlet and 4mm diameter outlet/drain. Parker can supply dedicated hoses and fittings for use with most hydraulic and hydrocarbon fluids.

Long life remote operation

The IOS uses a long life regulated 12 Vdc power supply, with an M12, 4 pin connector, plus a rechargeable NiMH detector battery unit for use onsite or in remote locations.

Complies with the latest standards

The IOS is designed in accordance with the latest global standards including:

- CE marking
- EC Declaration of Conformity
- Machinery Directive
- EMC EN61000-6-3:2001
- EMC EN61000-6-2:2001
- EN 61010-1:2001

Fluid and pressure control

The IOS automatically adjusts flow rates, to an optimum level of 60ml/min. Total flow range is between 40 and 140ml/min, with maximum online operating pressure being 2.5Bar (36psi). An optional inlet reduction valve is also available for high pressure applications.



Results are viewed in the OLED digital display window

Pressure reducing valve (PRV)

A pressure compensated PRV device (Parker Hannifin part number ACC6NN027) has been developed to enable testing where flow pressures in the hose exceeds 2.5 bar, up to a maximum of 350 bar.



Parameter	Value
Working pressure range	0 to 2.5 bar
Working pressure with PRV	2.5 to 350 bar
Working viscosity	1 to 300 cSt



High Pressure Connection

Manual Connection: Press the Pressure Reducing Valve firmly into the **INLET** port



Low Pressure Connection

Connect **INLET** (Ø 6mm) hose

IOS Technical Specifications

Dimensions

Dimensions are given in mm (inches)

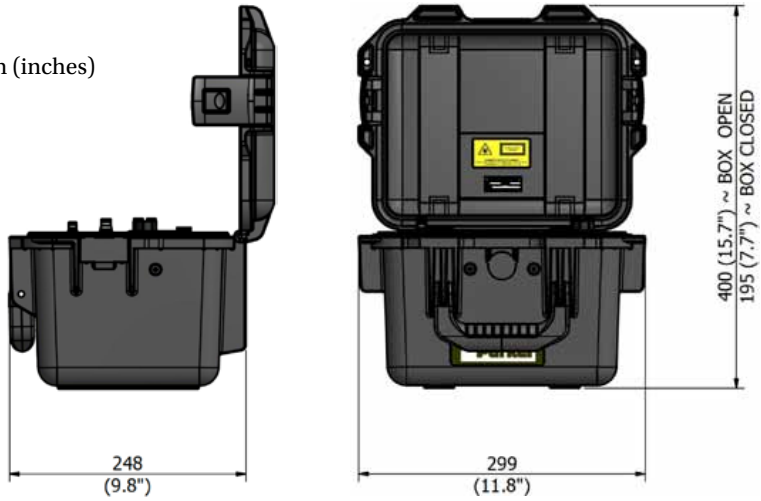

Low pressure connection setup

We recommend that the IOS is positioned in a safe, stable area, as close as possible to the system output and only the hose fittings provided are used.

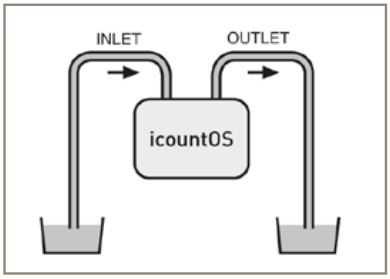

Option 1

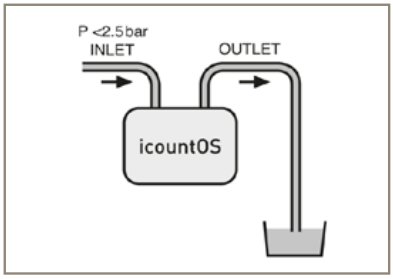

Option 2

High pressure connection setup (Optional equipment needed)

(High pressure is defined for this unit as more than 2.5 bar, with a maximum of 350 bar)

We recommend that the IOS is positioned in a safe, stable area, as close as possible to the system output and only the hose fittings provided are used. For pressure systems (more than 2.5 bar) one high pressure hose assemblies: ACC6NN034, and a Pressure Reducing Valve (PRV) ACC6NN027 are required.

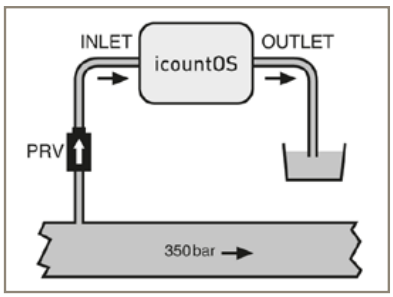



Attach **OUTLET** (Ø 4mm) hose



To remove the PRV, press down on the removal tool at the same time as lifting PRV off.

The IOS web interface

The IOS is a unique product in that it has its own web page generator which means that the stored data can be downloaded or viewed on any PC or laptop.

Utilising a computer's Internet Explorer utility, simply plug in the supplied network cable, open Explorer and enter the IOS's unique IP/MAC address.

Home page

KEY

1. Product description
2. Key features
3. Register the product at **www.parker.com/unlock**

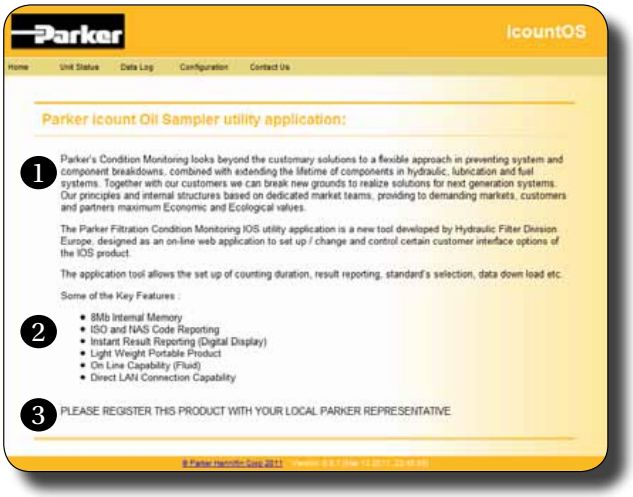

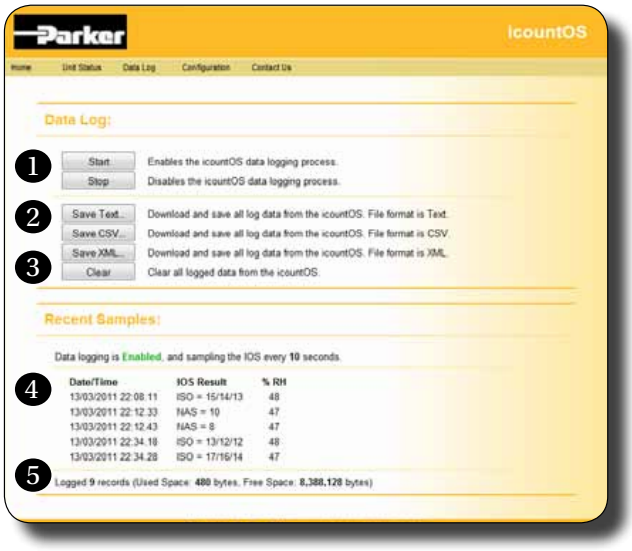

Data log page

KEY

1. Start and Stop data logging
2. Save data in one of three date formats:
   - TXT format
   - CSV (Comma Separated Variables)
   - XML (eXtended Markup Language)
3. Clear data logging memory
4. List of the five last samples taken
5. Memory usage

Unit status page

KEY

1. The Unit Status page is a list of current values for various parameters for the connected IOS unit.

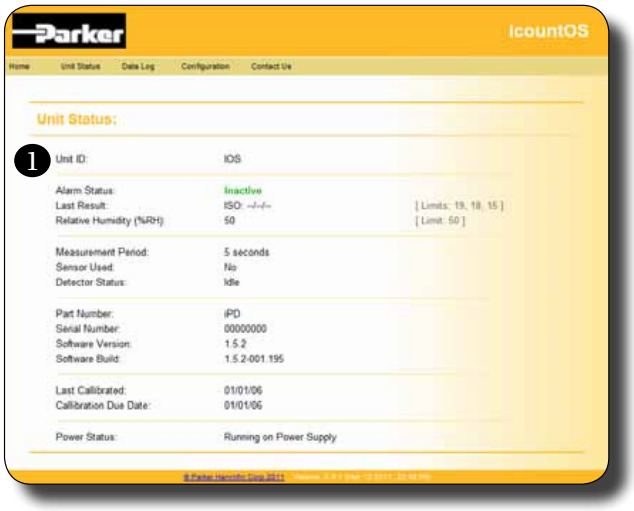



Configuration page

KEY

1. Alarm limit settings for:
   - 4µm channel (c)
   - 6µm channel (c)
   - 14µm channel (c)
2. Alarm limit setting for Relative Humidity
3. Measurement period
4. Data logging interval
5. Unit name
6. Unit location

Configuration: set report standard page

KEY

1. Select either the ISO4406:1999 or NAS1638 standard
2. Confirm the selected standard

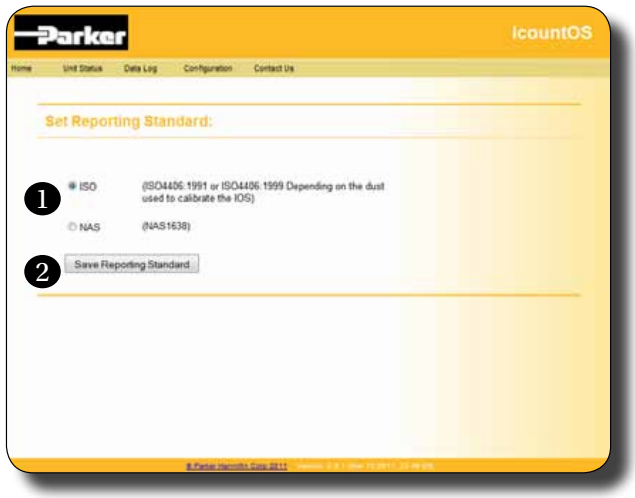

Tel: +45 63 12 83 00 | Email: ps@hymatik.com | www.hymatik.com | Hvidkaervej 27a, DK-5250 Odense SV, Denmark

Technical Specifications

Feature	Specification
Product start-up time	10 seconds minimum
Measurement period	Default 30 seconds run time; 15 seconds data logging time
Reporting interval	Onboard data storage every second. Output via RJ45 connection
Principle of operation	Laser diode optical detection of actual particulates
International codes range	Up to ISO 22 (+/- 1 ISO code) NAS 0-12
Calibration	Calibration by recognised online methods confirmed by the relevant ISO procedures. MTD – via a certified primary ISO 11171 automatic particle detector using ISO 11943 principles. Particle distribution reporting to ISO 4406:1999
Recalibration and Servicing	Recommended every 12 months
Working pressure	2.5–350 bar (35–5000psi) Pressures above 2.5 bar require the use of a Parker Pressure Reducing Valve (PRV) – ACC6NN027
Working viscosity	1-300 cSt
Flow range through IOS	40–140ml/minute; controlled at 60ml/min by IOS's internal pump
Fluid connection interface	INLET: 6mm push-fit. DRAIN: 4mm push-fit
Ambient storage temperature for unit	–40°C to +80°C; –40°F to +176°F
Operating temperature for unit	–30°C to +80°C; –22°F to +176°F
Operating humidity range	5%RH to 100%RH
Fluid operating temperature (Oil)	+5°C to +80°C; +41°F to +176°F
Fluid operating temperature (Fuel)	–20°C to +70°C; –4°F to +158°F
Moisture sensor	Linear scale within the range 5%RH to 100%RH
Computer compatibility	IP68-rated RJ45 connection that may be connected to a laptop computer's RJ45 LAN port using the 2m cable supplied
Power requirement	Regulated power supply supplied with the unit
Certification	IP54 rating (unit open) IP67 rating (unit closed) EC Declaration of Conformity Machinery Directive EMC EN61000-6-3:2001 EMC EN61000-6-2:2001 EMC EN61010-1:2001 CE Certified

What is included?	
Offline IOS 1210 EUR/UK/US	**Online IOS 1220 EUR/UK/US**
1x IOS Oil Sampler Unit	1x IOS Oil Sampler Unit
+ 1x Power Supply	+ 1x Power Supply
+ 1x RJ45 LAN Cable	+ 1x RJ45 LAN Cable
+ Low Pressure Hoses	+ 1x Low Pressure Hose
	+ 1x PRV
	+ 1x High Pressure Hose

Important Information

WARNING-USER RESPONSIBILITY

FAILURE OR IMPROPER SELECTION OR IMPROPER USE OF THE PRODUCTS DESCRIBED HEREIN OR RELATED ITEMS CAN CAUSE DEATH, PERSONAL INJURY AND PROPERTY DAMAGE.

– This document and other information from Parker-Hannifin Corporation, its subsidiaries and authorized distributors provide product or system options for further investigation by users having technical expertise.

– The user, through their own analysis and testing, is solely responsible for making the final selection of the system and components and assuring that all performance, endurance, maintenance, safety and warning requirements of the applications are met.

– The user must analyse all aspects of the application, follow applicable industry standards, and follow the information concerning the product in the current product catalogue and in any other materials provided from Parker or its subsidiaries or authorised distributors.

– To the extent that Parker or its subsidiaries or authorized distributors provide component or system options based upon data or specifications provided by the user, the user is responsible for determining that such data and specifications are suitable and sufficient for all applications and reasonably foreseeable uses of the components or systems. The operation of the products described here in is subject to the operating and safety procedures details of which are available upon request.

Sales conditions

The items described in this document are available for sale by Parker Hannifin Corporation, its subsidiaries or its authorized distributors. Any sale contract entered into by Parker will be governed by the provisions stated in Parker's standard terms and conditions of sale (copy available upon request).

Parker Hannifin
Hydraulic Filter Division Europe
FDHB500UK/icountOS

Ordering Information

Key	Fluid type	Calibration	Connection	Options
IOS1220EUR	Mineral	MTD	Online	No options
IOS1210EUR	Mineral	MTD	Offline	No options

Key		Fluid type		Calibration		Connection		Options	Region
IOS	1	**Mineral**	2	MTD	1	Offline	**0**	**No options**	**UK**
	3	Aviation fuel (4 channels*)			2	**Online**			**EUR**
									USA

*Fluid Type 3: Contact Parker Hannifin

Accessory Part Numbers

Description	Part number
Hose Kit Bag (includes one power pack, RJ45 patch cable and low pressure hose connectors) 	ACC6NN029UK ACC6NN029EUR ACC6NN029US
Pressure Reducing Valve (PRV) 	ACC6NN027 (Standard with IOS 1220)
Power Pack (UK 2m cable) 	ACC6NN040
Power Pack (EUR 2m cable) 	ACC6NN041
Power Pack (US 2m cable) 	ACC6NN042

Description	Part number
RJ45 LAN Connector Cable 	ACC6NN028
Carry Strap 	ACC6NN030 The Carry Strap option MUST be selected at the time of placing the IOS order.
Low Pressure Hoses (4mm and 6mm) 	ACC6NN031
High Pressure Hose Assembly 	ACC6NN034 (Standard with IOS 1220)
Verification Fluid 	SER.MISC.067

Early Warning

icount Lubrication and Hydraulic Oil Monitoring system



An all-in-one particle detection system

Developed around the proven Parker icountPD particle detector

Particle detection is the best known way to determine whether oil is contaminated or not and the best way to detect particles online or offline is by using Parker's icountPD. To make results even easier to obtain we added some extra equipment.



Contact Information:

Parker Hannifin
Hydraulic Filter Division Europe

European Product Information Centre
Freephone: 00800 27 27 5374
(from AT, BE, CH, CZ, DE, EE, ES, FI, FR, IE, IT, PT, SE, SK, UK)
filtrationinfo@parker.com

www.parker.com/hfde

Product Features:

Wind turbines
- Gear boxes
- Hydraulic systems in pitch, yaw and brake

Shipping and shipbuilding industry
- Propulsion systems
- Thrusters
- Deck machinery

Steel and pulp & paper industry
- Lubrication oil systems
- Hydraulic system control of presses and winders

Power generation
- Lubrication oil systems
- Hydraulic system control for fuel feeding

Proactive maintenance with icount

With the icount System, the early bird stands every chance of catching the worm.

Be that early bird and schedule oil changes through predictive maintenance of the system and plan service times. Parker's icount system provides early warning of any unwanted changes in hydraulic or lubrication oil quality. Thus increasing the availability of the machinery by reducing the need for unnecessary downtime.

Insurance companies are able to lower fees as the icount System warns of possible component failure. It also reduces the warranty costs thanks to an integrated pump unit that enables a cost effective solution to monitor oil from different points of a system.

icount SYSTEM		
	Standard	**Options**
Electric motor	230VAC	110VAC, 24 VDC
Pump	X	
Flow control unit	X	
Pressure control valve		for pressurized systems
Particle detector	icountPD	
Local display	led	none, digital, GSM
Communications	RS232	RS232/4-20mA, RS232/ 0-5V, RS232/Canbus
Moisture sensor		X
Limit Relay		X
Cable connector kit	M12 - 8 pin	
Short start module		X
Mounting	bracket	sealed box

Parker's icount System housing can include several options to quarantee uniform sample handling and measuring any required aspect of oil quality.

You can trust icount accuracy

Parker icount Lubrication and Hydraulic Oil Monitoring System is available today. It features Parker's laser technology and all necessary components for reliable monitoring up to 1000 cSt oil viscosities. The unit allows system monitoring and accurate particle detection from any available source.

A moisture sensor as an option to measure the relative humidity of the oil and other add-on sensors like viscosity measurement are also available.

Several power versions for easy installation and worldwide operation are available. The system is capable of data transmission in multiple forms and central control can collect information and manage easily for example large marine wind farms off shore and on land.

A special design for wind turbine applications with pressurized connection is available. Correct oil pressure and steady flow ensure consistent measuring.



icountPD

For more information contact Parker.

The icountPD Particle Detector from Parker represents the most up to date laser based technology in particle detection. Standard in every icount Monitoring System.

icountMS Range

Fluid Condition Monitoring –
Moisture Sensors



An essential component of any predictive maintenance programme

Fast, reliable and accurate inline detection of moisture in fluids

MS moisture sensors provide fast, reliable and accurate inline detection of moisture in fluids. Technology developed for preventative maintenance programmes. MS150 is the 'low pressure' option for suction line/reservoir applications. MS200 is the 'Programmable' sensor monitoring and reporting relative humidity (RH), moisture content in oils. MS300 'Intrinsically safe' sensor ATEX certified for use in hazardous Zone 0 environments.



Product Features:

- MS moisture sensors provide fast, reliable and accurate inline detection of moisture in fluids.
- Technology developed for preventative maintenance programmes.
- MS150 'low pressure' suction/Return line applications. 10 bar maximum operating pressure.
- MS200 'Programmable' sensor monitoring and reporting relative humidity (RH), moisture content in oils. 420 bar MAOP.
- MS300 'Intrinsically safe' sensor ATEX certificated for use in hazardous Zone 0 environments. 420 bar MAOP.
- Temperature Outputs on all versions.

Contact Information:

Parker Hannifin
Hydraulic Filtration

European Product Information Centre
Freephone: 00800 27 27 5374
(from AT, BE, CH, CZ, DE, EE, ES, FI, FR, IE, IT, PT, SE, SK, UK)
filtrationinfo@parker.com

www.parker.com/hfde

icountMS Range

Cost Effective Moisture Detection

Features & Benefits

- Continuous, online moisture indication, for hydraulic and lubricating systems.
- Reporting of % relative humidity of water content, giving the user information on how close to the fluids real saturation point.
- Reliable data on the rate of water absorption.
- Sensing cell technology using a laser trimmed thermoset polymer, for capacitive sensing that is capable of absorbing water molecules due to its micro porous structure.
- Uses a thermistor for temperature compensation correction. Offering total confidence in reporting the %RH relative humidity over the sensors temperature range.
- A purpose designed tee adaptor allows for easy installation into an existing fluid system.
- The MS200 can also be specified with a bench top wand offering the end user greater flexibility.
- Wand not available with MS150 or MS300

Typical Applications

- Ground support vehicles
- Pulp and paper plants
- Marine hydraulics
- Power transmission & distribution
- Forestry
- Industrial hydraulics
- Earth moving applications
- Agricultural
- Hazardous Areas (Zone 2)
- Theme parks (Ride hydraulics)



In-Line Moisture Measurement of Hydraulic & Lubricating Oils.

Parkers Moisture Sensor Range offers fast, reliable and accurate in-line detection of moisture in fluids. The MS transducer type technology has been especially designed with the preventative maintenance programme environment in mind.

The industry accepted sensing cell device will monitor and report Relative Humidity (RH), moisture content in oils. The water content measurement technique offers the end user benefits over the current standard form of water content reporting (PPM).

This allows for real time preventative maintenance to be undertaken and corrective actions to be made. By knowing that the water contamination is still within the oils absorbing range, less than 100%, reclaiming fluid properties before additive damage occurs can initiate calculable cost savings.



MS150 Moisture Sensor

Specification

Pressure:
Maximum allowable operating pressure. (MAOP): 10 bar (145 PSI).

Operating temperature:
Minimum: -20°C (-4°F).
Maximum: +85°C (+185°F).

Flow through sensor cell:
Installed in active flowstream.

Fluid compatibility:
Mineral oils and petroleum-based fluids

Viscosity range:
Unlimited.

Port connections:
1/4" BSPT or 1/4" NPT.

Connector Details:
M12x1 - 5 way

Supply voltage:
+8 to +30 Vdc.

Sensor size/weight/material:
80mm x 43mm/0.1kg/Aluminiumz

IP ratings:
IP68 % (When mated with moulded connector)

RH Outputs:
(+1 to +5 Vdc) or (4 to 20mA)

Temperature Outputs:
0 to +5 Vdc

Installation Details

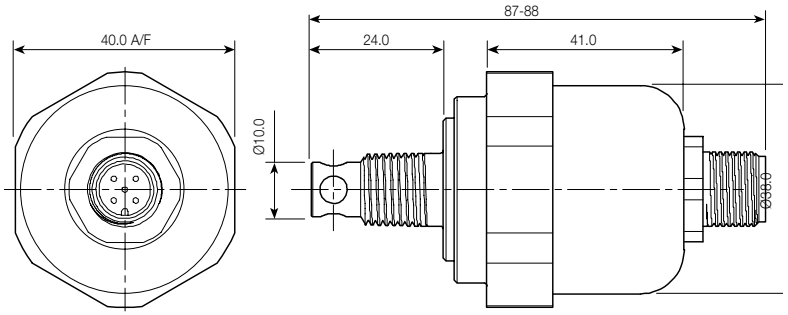

All dimensions in millimetres (mm)

Dimensions are for reference only

Thread Form Options (MS150 + MS200)

BSPT

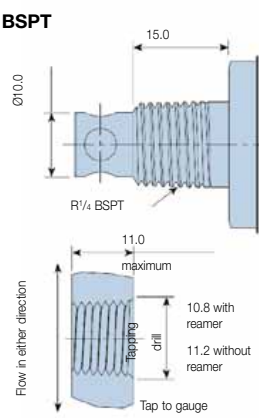

Installation details for R1/4 BSPT taper

Sensor Outputs

MS150 moisture sensor pin designations

Pin	Designation	I/O	Description
1	Supply	Input	Supply voltage (+8 to +30Vdc)
2	%RH	Output	% Saturation out (+1 to +5Vdc)
3	%RH	Output	% Saturation out (+4 to +20mA)
4	Temperature	Output	Temperature out (0 to +5Vdc)
5	Common	Input	Common (0Vdc) ground from power supply (not chassis ground)

MS150 Pin Designations

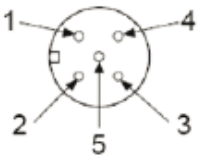

NPT

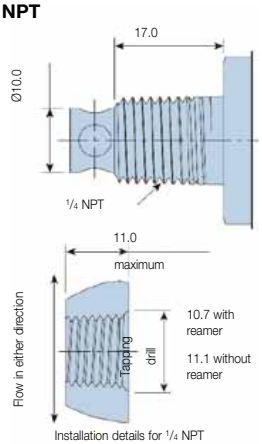

Installation details for 1/4 NPT

Interpreting the data

Oil type: Texaco Rando 46.
Saturation point: 400ppm @ 65ºC (150ºF).
At the above operating condition, the meter displays 100% saturation. As the meters scale indicates a reduction in the saturation percentage, there is also a corresponding reduction in PPM at a constant temperature. In the example above, a meter reading of 50% saturation could be interpreted as 200ppm at 65ºC (150ºF).

MS200 'Programmable'

Specification

% Saturation Calibration Accuracy:	+3% RH
Temperature Calibration Accuracy:	±1°C
Thermal Stability:	±1% RH (over compensated temperature range +10 to +80°C)
Stability:	±0.2% RH typical at 50% RH in 1 year
Linearity:	±0.5% RH typical
Analogue Output Hysteresis:	±0.5% RH Full Scale
Switched Output Hysteresis:	2% RH
Operating Temperature Range:	-40°C to +85°C (-40 to +185°F)
Operating Humidity Range:	5 to 100% RH (non condensing)
Response Time:	60 sec in slow moving air at 25°C
Maximum rated pressure:	420 Bar (6000 PSI)
Maximum torque on spanner flats:	30 Nm (ONLY USE SPANNER FLATS TO INSTALL ANDREMOVE THE MOISTURE SENSOR)
Seal Material (depending on MS):	Fluorocarbon, EPDM, Perfluoroelastomer
Material:	Stainless Steel 303
Connector Details:	M12x1, 8 Way, IP67 Connector (IP68 when mated with moulded cable)
Maximum Cable Length:	10 Metres with Voltage Output 100 Metres with Current Output
Output:	SEE ORDERING INFORMATION

Installation Details

All dimensions in millimetres (mm)
Dimensions are for reference only

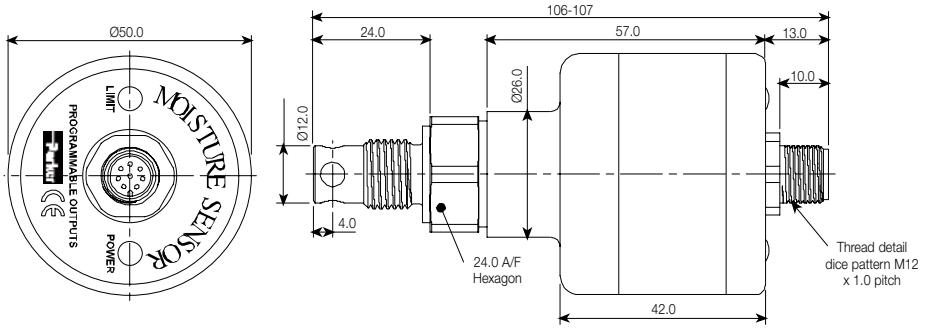

Thread Form Options and Hand-Held Unit (See MS Ordering Information)

Thread Form Option 5

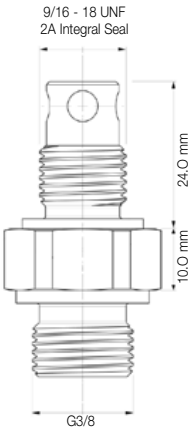

Hand Held Unit/Extended Probe Option 6

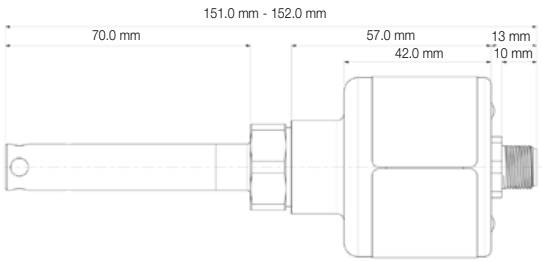

Thread Form Option 7

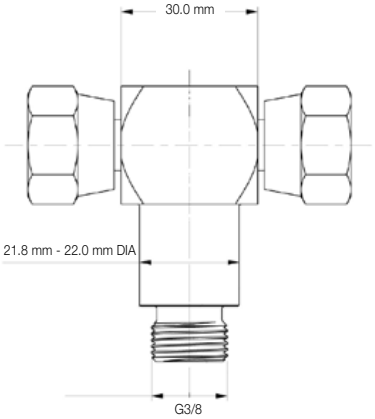

MS200 'Programmable'

Moisture Sensor Wiring and Pin Designations

Pin	Designation	I/O	Description
1	Alarm Switch	Output	Alarm Switch. Constant 5Vdc when in normal operation. Switch to 0Vdc when in alarm condition. Red LED illuminates when Sensor is in an alarm condition.
2	Analogue	Output	Temperature - Degí Celsius. User Select Output (0-3Vdc, 0-5Vdc, 1-6Vdc and 4-20mA).
3	Alarm Limit	Output	Alarm Limit (0-6V). Output that directly corresponds to the alarm set point.
4	Analogue	Output	% Saturation. User Select Output (0-3Vdc, 0-5Vdc, 1-6Vdc and 4-20mA).
5	Receive	Input	RS232 Communication.
6	Send	Output	RS232 Communication.
7	Common	Input	Common (0Vdc). Ground from power supply.
8	Supply	Input	Supply Voltage (+8 to +30Vdc). Green LED illuminates when power is properly applied.

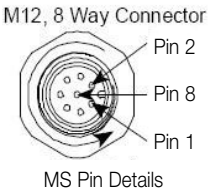

MS Pin Details

MS300 Intrinsically Safe

Specification

Pressure:
Maximum allowable operating pressure.
(MAOP): 420 bar (6000 PSI).

Operating temperature:
Minimum: -40°C (-40°F) - dependent on seal material.
Maximum: +85°C (+185°F).

Flow through sensor cell:
Installed in active flowstream.

Fluid compatibility:
Mineral oils, petroleum-based and Phosphate ester-Skydrol option available.

Viscosity range:
Unlimited.

Thread form connections:
See ordering information.

Outputs:
4-20mA (current loop).

Calibration accuracy:
+/- 5% RH

Compensated thermal stability:
+/- 1% RH (+ 10°C to +80°C)

Materials:
Stainless steel 303.

Sensor size/weight:
107mm x ø50mm/0.3Kg.

IP ratings:
IP68 (with specified moulded cable)

Developed in association with Triteq Ltd.

Installation Details – See MS300 Manual

Ex II 1G
Ga Ex ia IIB T4
CE 0518
Sira 07ATEX2255
IECEx SIR 07.0089

Moisture Sensor Connection Diagram

1. Supply (4-20 mA - IN) - Brown
2. Signal (4-20 mA - OUT) - White
3. Not Used - Blue
4. Not Used - Black
5. Not Used - Grey

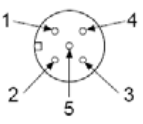

Tel: +45 63 12 83 00 | Email: ps@hymatik.com | www.hymatik.com | Hvidkaervej 27a, DK-5250 Odense SV, Denmark

MS300 Intrinsically Safe

Instalation details continued

The MS300 has been certified as Intrinsically Safe Electrical Apparatus and offers fast, reliable and accurate in-line detection of moisture in fluids for use in hazardous areas.

ATEX Certification (See page 71) allows the MS300 into areas of a potentially explosive atmosphere, that have previously not been allowed without permits, it is intended for use in Zone 0 hazardous areas requiring the use of category 1G equipment and has been designed for use with galvanic isolators to the specified values stated below:

The electrical parameters: Ui: 28V Ii: 93mA Pi:0.65W Ci: 380nF Li: 0

The following instructions apply to MS300 - 4-20mA Current Loop Moisture Sensor covered by certificate number Sira 07ATEX2255:

1. The equipment may be located where flammable gases of Group I may be present. The equipment is only certified for use in ambient temperatures in the range -20°C to +40°C and should not be used outside this range.
2. The equipment has not been assessed as a safety-related device (as referred to by Directive 94/9/EC Annex II, clause 1.5).
3. Installation of this equipment shall be carried out by suitably trained personnel in accordance with the applicable code of practice.
4. Repair of this equipment shall be carried out by the manufacturer or in accordance with the applicable code of practice (IEC 60079-19).

Visual Indicators Specifications

Bar Graph Indicator (PBG8341A)

Construction:
Housing – nylon 6/6, window – acrylic,
bezel/board supports – ABS,
pins – phosphor bronze.

Power supply:
11 – 30 Vdc.

Signal input: (By dipswitch configuration)
Off – differential up to 5V.
A – single signal (Ref. 0V) up to 5V.
B – single signal (Ref. 1V) up to 6V.

Cut out size:
45.6mm x 45.6mm.

Fixing:
Push fit panel thickness 0.9mm to 3.2mm.

Sealing:
Designed to IP50 standard.
(Front face may be silicon sealed after LED configuration).

Scale:
Supplied 0 to 100% in horizontal.
Other scales, in volume, consult Parker Hannifin.

Scaling factors:
10% to 100% range. Fully adjustable.

Lamp intensity:
4mcd each.

Front viewing:
Polarised.

Weight:
29gms.

Alternative Indicator

Description	DDU1001	DDU1002
Power supply	11 - 30 Vdc	110 - 240 Vdc
Accuracy	± 0.1% typical	± 0.1% typical
Sample rate	2.5 per second	2.5 per second
Operating temp (°C)	0 - 50	0 - 50
Storage temp (°C)	-10 to +70	-10 to +70
Display	3.5 digit LED	3½ digit LED
Power output (Vdc)	24	24
Weight (kg)	0.30	0.30
Panel cutout (mm)	93x45 ± 0.5	93x45 ±/0.5
Dimensions (mm)	48x96x93	48x96x93



PBG8341A



DDU1001/DDU1002

Product accessories part numbers

Product Number	Supersedes	Description	For MS type
DDU1001	NA	Digital display unit 22-55 Vdc	MS150, 200 + 300
DDU1002	NA	Digital display unit 110-240 Vdc	MS150, 200 + 300
PBG8341A	PBG.8341.1A	Bar Graph Indicator (+11 to +30 Vdc)	MS150, 200 + 300
ACC6NF003	NA	5 meter M12 X 1 - 5 pin moulded cable (IP68) Connector and flying leads	MS150 + 300
ACC6NF000	B97200	5 meter M12 X 1 - 8 pin moulded cable (IP68) Connector and flying leads	MS200
ACC6NF001	S970200	M12, 5 pin rewireable connector (IP65) connector only. No cable	MS150 + 300
ACC6NE008	S970400	UK 12 volt power supply	MS150, 200 + 300
ACC6NE009	S970400	European 12 volt power supply	MS150, 200 + 300
ACC6NE010	S970400	US 12 volt power supply	MS150, 200 + 300

Moisture sensor output setting

The Moisture sensor reports on the saturation levels of the fluid passing through the sensing cell. The output is a linear scale, reporting within the range of 5% saturation to 100% saturation.

Saturation	4–20mA	0–3Vdc	0–5Vdc
5%	**4.8**	**0.15**	**0.25**
25%	**8**	**0.75**	**1.25**
50%	**12**	**1.50**	**2.50**
75%	**16**	**2.25**	**3.75**
100%	**20**	**3.00**	**5.00**

Ordering Information

MS150 - Standard Product Table

Product Number	Supersedes	Fluid type	Thread Forms	Connector
MS1503	MS150-3	Mineral	R 1/4" BSPT Taper	M12 5 WAY
MS1504	MS150-4	Mineral	1/4" NPT Taper	M12 5 WAY

MS200 - Product Configurator

Key	Model	Fluid type	Output Options	Thread Forms	Connector	Future option
MS	**2** Programmable	**2** Mineral	01 0 -3 Vdc	**1** G 1/4" BSP Bonded Seal	**1** M12 8 WAY	**0** No
		6 Aggressive	**02** 0 - 5 Vdc	**2** G 1/4" BSP Integral Seal		
			03 1 - 6 Vdc	**3** R 1/4" Taper		
			04 4 - 20 mA	**4** 1/4" NPT Taper		
				5 9/16 - 18 UNF 2A Integral Seal		
				6 Hand Held Unit/extended probe		
				7 G 3/8" BSP Female Swivel Equal T adaptor		

MS200 - Standard Product Table

Key	Model	Fluid type	Output Options	Thread Forms	Connector	Future option
MS	**2**	**2**	**02**	**1**	**1**	**0**
MS	**2**	**2**	**02**	**2**	**1**	**0**
MS	**2**	**2**	**02**	**3**	**1**	**0**
MS	**2**	**2**	**02**	**4**	**1**	**0**
MS	**2**	**2**	**02**	**5**	**1**	**0**
MS	**2**	**2**	**04**	**1**	**1**	**0**
MS	**2**	**2**	**04**	**2**	**1**	**0**
MS	**2**	**2**	**04**	**3**	**1**	**0**
MS	**2**	**2**	**04**	**4**	**1**	**0**
MS	**2**	**2**	**04**	**5**	**1**	**0**

MS300 - Product Configurator

Key	Model	Fluid type	Output	Thread form	Connector	Future option
MS	**3** Intrinsically Safe	**2** Mineral	**04** 4 - 20 mA	**1** G 1/4" BSP Bonded Seal	**2** M12 5 WAY	**1** None
		6 Aggressive		2 G 1/4" BSP Integral Seal		
				3 R 1/4" Taper Thread		
				4 1/4" NPT Taper Thread		
				5 9/16 - 18 UNF 2A Integral Seal		
				6 G 3/8" BSP Female Swivel Equal Tee		

MS300 - Standard Product Table

Key	Model	Fluid type	Output	Thread Forms	Connector	Future option
MS	**3**	**2**	**04**	**1**	**2**	**1**
MS	**3**	**2**	**04**	**2**	**2**	**1**
MS	**3**	**2**	**04**	**3**	**2**	**1**
MS	**3**	**2**	**04**	**4**	**2**	**1**
MS	**3**	**2**	**04**	**5**	**2**	**1**

Oilcheck

Hand-held Oil Condition Monitor



Portable and battery powered for 'go-anywhere' monitoring

Hand-held condition monitor provides a visual comparison between new and used oils

Parker's Oilcheck is completely portable and battery powered with a numerical display that indicates positive or negative increase in dielectrics. Oilcheck gives an early warning of impending engine failure and the simplistic hand-held design makes it easy to use.



Oilcheck shown with optional rubberized sleeve.

Contact Information:

Parker Hannifin
Hydraulic Filter Division Europe

European Product Information Centre
Freephone: 00800 27 27 5374
(from AT, BE, CH, CZ, DE, EE, ES, FI, FR, IE, IT, PT, SE, SK, UK)
filtrationinfo@parker.com

www.parker.com/hfde

Product Features:

- Oilcheck hand-held condition monitor provides a visual comparison between new and used oils.
- The Oilcheck, once calibrated with clean oil, will store the calibration units memory when the unit is switched off, until such time that a re-calibration is required by the user.
- Completely portable and battery powered.
- Numerical display shows positive or negative increase in dielectrics.
- Gives early warning of impending engine failure.
- Optional protective rubberized sleeve.

Oilcheck

Hand-held Oil Condition Monitor

Features & Benefits

- A comparator between new and used oils.
- Oilcheck gives early warning of impending engine failure.
- Cost effective solution to save money and help increase engine life.
- Completely portable, battery powered.
- Ideal for fleet owners, garages and DIY mechanics.
- Numerical display to show positive or negative increase in dielectrics.

Using Oilcheck

Following the simple sampling procedure. Parker's Oilcheck will ensure effective and highly repeatable results. Once a clean oil sample has been placed in the 'Sensor Well' and the 'TEST' button has been pressed, the instrument will 'zero' on the sample.

Once cleaned out with a degreaser and replaced by a contaminated sample, a new reading is obtained on the LCD, which can be easily compared against the green/amber/red efficiency scale.

Typical Applications

- Fleet owners
- Construction equipment maintenance
- Vehicle service garages
- Plant hire maintenance

The Oilcheck from Parker Filtration's Condition Monitoring Centre detects and measures the dielectric constant of oil, by comparing the measurements obtained from used and unused oils of the same brand.

Used as a regular service monitoring instrument, the Oilcheck will give the engineer warning of an impending engine failure and promote increased engine life. Oilcheck is the low-cost solution that will take the guesswork out of oil changes, saving money and time.



Specification

Case construction:
ABS.

Circuitry:
Microprocessor control.

Battery:
1 x 9V alkaline (supplied).

Display:
LCD.

Suitable oil types:
Mineral and synthetic based oils.

Repeatability:
Better than 5%.

Readout:
Green/amber/red grading, Numerical value (0-100%).

Battery lifetime:
>150 hours or 3,000 tests.

Dimensions:
250mm x 95mm x 34mm (9.8" x 3.7" x 1.3").

Weight:
0.4kg.

Memory capacity:
Remembers the last calibration.

Using Oilcheck



Green/amber/red numerical value



Function buttons

The Oilcheck can remove the need for costly and time consuming laboratory analysis of mineral and synthetic oils used in engines, gearboxes and bearing lubrication systems. It detects mechanical wear and any loss of lubricating properties in the oil with a repeat accuracy of less than 5%.

The Oilcheck is able to show changes in the oil condition brought about by the ingress of water content, fuel contamination, metallic content and oxidation.

Installation Details

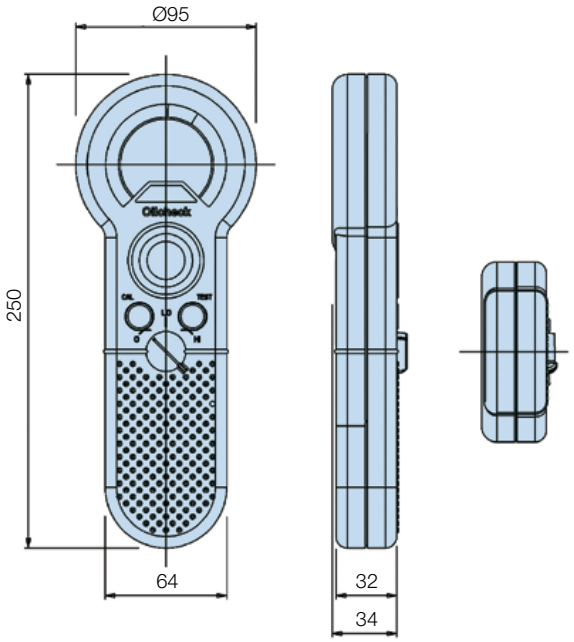

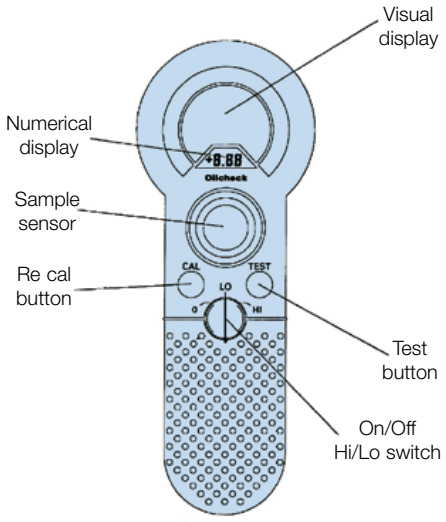

Ordering Information

Standard products table

Product number	Description
OLK605	Oilcheck kit with numerical readout
OLK611	Oilcheck cleaner
ACC6NV001	Rubberized protective sleeve

Note 1: Part numbers featured with bold highlighted codes will ensure a 'standard' product selection.
Note 2: Alternate displayed part number selection will require you to contact Parker Filtration for availability.

icountACM20 Lab Unit

Aviation Fuel Contamination Monitoring

Note: For information on icountPD for aviation fuels see page 436



A unique product with pedigree

DEFSTAN 91-91 Issue 6 Jet A-1Fuel Specification, adopts particle counting.

Development work carried out by the CMC engineers, in conjunction with Exxon Mobil Aviation, highlighted the need for an alternative test method to determine the levels of dispersed contamination in Jet fuel. 5 years of field testing and development of the already established and successful icountLCM20 Hydraulic Laser Particle Counter saw the introduction of the Parker icountACM20 with enhanced software providing the user with a better understanding of the contamination present in a sample.
As the benchmark particle counter for use in measuring the levels of contamination in fuels, the icountACM20, as per the UK's Energy Institute Test Method IP564, has now been included in the DEFSTAN 91-91 Issue 6 Jet Fuel Specification as a report only test alongside the current Gravimetric test method (IP423 or ASTM D5452) and Clear & Bright Visual test method (IP216 or ASTM D2276)



Contact Information:

Parker Hannifin
Hydraulic Filter Division Europe

European Product Information Centre
Freephone: 00800 27 27 5374
(from AT, BE, CH, CZ, DE, EE, ES, FI, FR, IE, IT, PT, SE, SK, UK)
filtrationinfo@parker.com

www.parker.com/hfde

Product Features:

- icountACM20 monitors aviation fuel contamination to DEFSTAN 91-91 Issue 6 Jet A-1 fuel specification.
- Energy Institute Test Method IP 564.
- 2-minute test procedure.
- Fully manufactured by Parker with 20 years experience in the Particle Counter Measuring market.
- Laser optical scanning analysis.
- Multi-standard ISO cleanliness reporting.
- On-board, rear-mounted pump enables monitoring possibilities.
  For example: Fuel storage/ vehicle tanks and fuel storage drums.
- Latest averaging software as standard.
- Downloader software.

Tel: +45 63 12 83 00 | Email: ps@hymatik.com | www.hymatik.com | Hvidkaervej 27a, DK-5250 Odense SV, Denmark

icountACM20 Lab Unit

Aviation Fuel Contamination Monitoring



Features & Benefits

Test Time:
2 minutes

Repeat Test Time:
Every 2 minutes (Manual testing), every 6 minutes (automatic)

Principle of Operation:
Optical scanning analysis and measurement of actual particles and inference to water presence

Primary Output:
≥4µ(c), ≥6µ(c), ≥14µ(c), ≥21µ(c), ≥25µ(c), ≥30µ(c) counts per ml

Secondary Diagnostic Output:
% Volume Distribution, via graphical display on handset and printout

International codes:
ISO 7-22 in accordance with ISO 4406-1999

Data entry:
32 character two line dot matrix LCD. Full alpha numeric entry facility on keypad

Data retrieval:
Memory access gives test search facility for up to 300 saved tests

Calibration:
In accordance with Parker Calibration Procedure CM20-N, which complies to ISO11171:1999, Clause 6 (Omitting Annex F)

Re-calibration:
Every 12 months by a dedicated Parker Service Centre (Consult Parker) as required under strict EI methods

Max. working pressure:
420 bar

Operating Temperature:
+5°C to +80°C

Memory store:
300 test capacity

Computer compatibility:
Interface via RS 232 connection @ 9600 baud rate (USB serial cable to RS232 option available)

Laboratory sampling:
Utilizes on-board rear mounted pump

Portability:
Only 8 kg. icount ACM20 has its own battery pack and carry case with wheels 13kg total weight

Power requirement:
12vDC input, 6 x 'D' Cell batteries or rechargeable battery pack

Printer facility:
Integral 16 column printer for hard copy data

Certification:
Complies with all relevant EC declarations of conformity

icount ACM20 Case Mounted Pump

- Integrated Pump assembly incorporated onto the ACM20 unit.
- Powered directly from ACM20 unit, LED power indication with no additional power supplies required.
- Direct sampling from fuel sample bottles or tank via 3 metre inlet suction tube.
- Incoporated double speed flush and test sequence.
- Managed flow rate/correct volume sample as per IP 564 test method.

FACT: icountACM20 is fully compliant with the EI (Energy Institute) test method

Applications

The Parker icountACM20 Portable Particle Counter has been developed from existing technology for monitoring contamination in AvTur and other hydrocarbon fuels, in accordance with the Energy Institute (EI) Method IP 564.

In addition, the ACM can also be used to monitor various fuels from existing sampling points in locations from refineries, pipelines, distribution terminals, airport fuel supply systems all the way through to the point of uplift into aircraft*.

* Hot works permit required for online sampling (ATEX Zone 2 unit available). Page 478.

- **Fuel Testing Laboratories – DEFSTAN 91-91 Issue 6**
  In order to better understand dispersed contamination in jet fuel, particle counting is now included alongside existing laboratory techniques

- **Bottle Sampling - Energy Institute (EI) - IP 564**
  Laboratory determination of the level of dispersed contamination in aviation kerosine using an Automatic Particle Counter (APC)

- **Replace Clear & Bright and Gravimetric**
  With the introduction of the icount ACM20, all subjectivity surrounding Clear & Bright and Gravimetric methods can be removed

- **Also for use on petroleum based hydraulic applications (Skydrol compatible available)**
  Suitable for use with mineral oil and petroleum based fluid as per standard hydraulic particle counter, reporting fluid cleanliness to ISO 4406:1999

Tel: +45 63 12 83 00 | Email: ps@hymatik.com | www.hymatik.com | Hvidkaervej 27a, DK-5250 Odense SV, Denmark



Specification

Construction:
ABS structural foam and injection moulded case
Hand-held display - ABS
Keypad flurosilicone rubber

Mechanical Components:
Brass, plated steel, stainless steel and aluminium

Seals:
Fluorocarbon

Hoses:
Nylon (Kevlar braided microbore). St. steel armoured ends

Flow Rate:
25 - 28ml/min (dictated by CMP) 100ml/min with additional flush button

Fluid Compatability:
Hydrocarbon Fuel, Mineral Oil. For other fluids consult Parker

Fuse:
1.25 amp fast blow fuse included for overload protection (spare supplied)

icountACM20 Technology:
Flow cell, light obscuration

Repeatability/Accuracy:
As per or better than ISO 11171

Coincidence:
40,000 particles per ml

Viscosity Range:
1 -100 centistokes

icountACM20 Weight:
8 kg

Monitor Carrying Case:
Astra Board case

Carrying Case Weight:
5 kg

icountACM20 - rear view



Input Power Socket (note that you will have to remove the plastic dust cap to access the 12Vdc power socket).
A fast blow 1.25A fuse and the RS232 connection are located behind the removable cover plate. The RS232 interface is provided to download all test data stored in the instrument. See the **ParSmart Downloader** software for more information.

Ordering Information

Standard products table - icount ACM20

Product number	Supersedes	Description
ACM202022UK	N/A	icountACM20 (UK)
ACM202022US	N/A	icountACM20 (US)
ACM202022EUR	N/A	icountACM20 (EURO)
ACM202024UK	N/A	icountACM20 with lab kit - UK (DEFSTAN 9191)
ACM202024US	N/A	icountACM20 with lab kit - US (DEFSTAN 9191)
ACM202024EUR	N/A	icountACM20 with lab kit - EURO (DEFSTAN 9191)
ACC6ND000	B84794	1 meter process cable
ACC6NE006	B84816	Parsmart downloader software
ACC6NE019	P843855	icountACM20 transit Case
ACC6NW003	B84746	Vapour/waste bottle assembly
ACC6NE029	B84745	Throttle kit
ACC6NE001	B84645	Millipore adaptor kit
ACC6NE013	B84609	Re-chargeable battery pack
ACC6NE008	B84817	UK power supply
ACC6NE010	B84830	US power supply
ACC6NE009	B84831	Euro power supply
ACC6NE020	B84832	UK Offline kit
ACC6NE021		Euro Offline kit
ACC6NE022		US Offline kit
SERMISC067	N/A	500ml verification fluid
ACC6NE015	B84702	Printer reel (x5)
ACC6NE014	P843702	Printer ribbon (x1)

Note 1: Part numbers featured with bold highlighted codes will ensure a 'standard' product selection.
Note 2: Alternate displayed part number selection will require you to contact Parker Filtration for availability.
Note 3: Selected spare parts - for a full list contact Parker.
* Hot works permit required for online sampling.



Field Monitoring - icountACM202022

For use in non-hazardous areas, the icountACM202022 is designed for online sampling of hydrocarbon fuels and hydraulic systems, utilising existing "quick connect" sampling points such as the Millpore Adaptor.

Tel: +45 63 12 83 00 | Email: ps@hymatik.com | www.hymatik.com | Hvidkaervej 27a, DK-5250 Odense SV, Denmark

icountACM20 Lab Unit

Aviation Fuel Contamination Monitoring

DEFSTAN 91-91 Issue 6

Defence Standard 91-91 is the specification for aviation turbine fuel, which the United Kingdom Civil Aviation Authority (CAA) has agreed is under the technical authority of the Director of the Defence Fuels Group.

IP 564

Laboratory determination of the level of dispersed contamination in aviation kerosene using an Automatic Particle Counter (APC). This standard describes a method for determining the level of dispersed contamination in aviation kerosene fuels, specifically dirt particles and water droplets in the range from ≥4µ(c) to ≥30µ(c).
This method relates specifically to Aviation fuels but the equipment can be used on all fuels, petroleum and mineral based fluids.

Note:
The mandatory implementation date for IP 564 test method "Determination of the level of cleanliness of aviation turbine fuel - laboratory automatic particle counter" was July 1st 2009. It is the specification authorities intention to replace current test methods with particle counting at the earliest opportunity.

IP 564 Procedure

Step 1
The apparatus shall be set up in accordance with Parker's operating instructions.

Step 2
Test Portion Preparation:
Decant a minimum of 450ml of the field sample into a clean test portion container.

Step 3
Prior to starting a test, tumble the test portion end over end for 60 seconds to ensure any settled particles are redistributed.

Step 4
Turn on the Case Mounted Pump and flush for 60 seconds.
Do not press the fast flush button.
While flushing, enter the test identifier (see manual).

Step 5
Following the flush, start a test by turning the blue valve in the direction indicated
Perform a further 3 tests. (4 in total).











icountPD Z2

ATEX Approved Online Particle Detector



For use in explosive and hazardous areas

The icountPD Particle Detector from Parker represents the most up to date technology in solid particle contamination analysis. This compact, permanently mounted laser-based ATEX approved particle detector module is designed for use in Zone 2 areas and is housed in a robust Stainless Steel IP69K approved enclosure that provides a cost effective solution to fluid management and contamination control.



Contact Information:

Parker Hannifin
Hydraulic Filter Division Europe

European Product Information Centre
Freephone: 00800 27 27 5374
(from AT, BE, CH, CZ, DE, EE, ES, FI, FR, IE, IT, PT, SE, SK, UK)
filtrationinfo@parker.com

www.parker.com/hfde

Product Features:

- Independent monitoring of system contamination trends.
- Assembled in an approved and certified Stainless Steel enclosure to comply with ATEX Directive 94/9/EC.
- Can be used in explosive and hazardous areas.
- ATEX Zone 2.
- Certified to CE Ex II 3GD,Ex nA IIC T4 Gc,Ex tc IIIC Dc SIRA 09ATEX4340X and IECEx SIR 09.0137X (-30°C<Ta<+60°C).
- Moisture & %RH indicator (optional).
- Warning limit relay outputs for low, medium and high contamination levels.
- Continuous performance for prolonged analysis.
- Self diagnostic software.
- Full PC/PLC integration technology such as:- RS232 and 0-5Volt, 4-20mA, CAN(J1939) (Contact Parker for other options.
- Set up and Data logging support software included.

Tel: +45 63 12 83 00 | Email: ps@hymatik.com | www.hymatik.com | Hvidkaervej 27a, DK-5250 Odense SV, Denmark

icountPD Z2

ATEX Approved Online Particle Detector



Features & Benefits

Diagnostic Self Check Start-up Time:
Customer selectable 5-900 seconds
Measurement Period:
5 to 180 seconds
Reporting interval through RS232:
0 to 3600 seconds
Limit Relay Output:
Changes occur +/- 1 ISO code at set limit (Hysteresis ON) or customer set (Hysteresis OFF)
Particle / % RH Output Signal:
Continuous
Principle of operation:
Laser diode optical detection of actual particulates.
Reporting Codes:
ISO 7 – 21, NAS 0 – 12, (AS 00 – 12 Contact Parker)
Icount will also report less than ISO 7, subject to the statistical uncertainty defined in ISO4406:1999, which is shown in the RS232, reporting results as appropriate e.g ">6"
Calibration:
By recognised on-line methods, confirmed by the relevant International Standard Organisation procedures.
Calibration Recommendation:
24 months
Performance:
+/- 1 ISO Code (Dependant on stability of flow)
Reproducibility / Repeatability:
Better than 1 ISO Code
Power Requirement:
Regulated 9 to 40Vdc
Maximum Current Draw:
150mA
Hydraulic Connection:
Size: 066
Connection: EO 24 cone end

Required Flow Range through the icountPD:
40 to 140 ml/min (Optimum Flow = 60ml/min)
Online Flow Range via System 20 Inline Sensors (Hydraulic systems only):
Size 0 = 6 to 25 l/min - (Optimum Flow = 15 l/min)
Size 1 = 24 to 100 l/min - (Optimum Flow = 70 l/min)
Size 2 = 170 to 380 l/min - (Optimum Flow = 250 l/min)
Required Differential Pressure across Inline Sensors:
0.4 bar (Minimum)
Viscosity Range:
1-500 cSt
Temperature:
Operating Environment -30°C to +60°C (-22°F to +140°F)
Storage -40°C to +80°C (-40°F to +176°F)
Operating Fluid +5°C to +80°C (+41°F to +176°F)
Working pressure:
2 to 420 bar (30-6000 PSI)
Moisture sensor calibration (Not offered with the fuel version):
±5% RH (over compensated temperature range of +10°C to +80°C (+50°F to +176°F)
Operating humidity range:
5% RH to 100% RH
Moisture sensor stability:
±0.2% RH typical at 50% RH in one year
Certification:
IP69K rating
EMC/RFI – EN61000-6-3:2007
EN61000-6-2:2005
Materials:
Stainless Steel case construction.
Stainless Steel hydraulic block.
Dimensions:
260mm x 114mm x 110mm
Weight:
2.6kg
Seals:
Fluorocarbon seals.

Ordering Information

Product Configurator

Key	Fluid type		Calibration		Display		Limit relay		Communication		Moisture		Cable connector kit	
IPDZ	1	Mineral	2	MTD	1	None	2	Yes	2	RS232 / 4 - 20mA	1	No	30	M12, 8 pin plug connector
	3	Aviation Fuel (4 channel)							5	RS232 / CANBUS (J1939)	2	Yes		

Standard Products Table

Part Number	Fluid type	Calibration	Display	Limit relay	Communication	Moisture	Cable connector kit
IPDZ12122230	Mineral	MTD	None	YES	RS232 / 4 - 20mA	YES	M12, 8 pin plug connector
IPDZ32122130	Aviation Fuel (4 channel)	MTD	None	YES	RS232 / 4 - 20mA	NO	M12, 8 pin plug connector

Accessory Part Numbers

Description	Part Number
Single Point Sampler	SPS2021
External flow device	S840074
Power supply	ACC6NN013
2 x 10 metre M12, 8-pin plug and socket Ultrat cable kit	ACC6NN021
RS232 to USB converter	ACC6NN017

Note: For System 20 Sensor part numbers see page 428.

Tel: +45 63 12 83 00 | Email: ps@hymatik.com | www.hymatik.com | Hvidkaervej 27a, DK-5250 Odense SV, Denmark

icountACM20 Z2

ATEX Approved Portable Particle Counter



For use in explosive and hazardous areas

icountACM20 Z2 is designed to be used to monitor various fuels from existing sampling points in hazardous locations such as refineries, pipelines, distribution terminals, airport fuel supply systems all the way through to the point of uplift into aircraft. With Zone 2 classification, the icount ACM20 Z2 is the worlds **only** ATEX approved particle counter.



Contact Information:

Parker Hannifin
Hydraulic Filter Division Europe

European Product Information Centre
Freephone: 00800 27 27 5374
(from AT, BE, CH, CZ, DE, EE, ES, FI, FR, IE, IT, PT, SE, SK, UK)
filtrationinfo@parker.com

www.parker.com/hfde

Product Features:

- Assembled in an approved and certified stainless steel enclosure to comply with ATEX Directive 94/9/EC.
- Can be used in explosive and hazardous areas, including offshore and mining applications.
- ATEX Zone II
- Certified to CE Ex II 3 G Ex nR/ nL IIC T6
- “A” Class product defined for the Aviation market.
- ATEX approved Handset and keypad.
- Suitable for use with mineral oil and petroleum based fluid as per ACM20/LCM20 particle counters.

icountACM20 Z2

ATEX Approved Portable Particle Counter

Features & Benefits

Test Time:
2 minutes.

Repeat Test Time:
Every 2 minutes (Manual testing) Every 6 minutes (Automatic).

Principle of Operation:
Optical scanning analysis and measurement of actual particles and inference to water presence.

Primary Output:
≥4µ(c), ≥6µ(c), ≥14µ(c), ≥21µ(c), ≥25µ(c), ≥30µ(c) counts per ml.

Secondary Diagnostic Output:
% Volume Distribution, via graphical display on handset.

International codes:
ISO 7-22 in accordance with ISO 4406-1999

Data entry:
32 character two line dot matrix LCD. Full alpha numeric entry facility on keypad.

Data retrieval:
Memory access gives test search facility for up to 300 saved tests.

Calibration:
In accordance with Parker Calibration Procedure CM20-N, which complies to ISO11171:1999, Clause 6 (Omitting Annex F).

Re-calibration:
Every 12 months by a dedicated Parker Service Centre (Consult Parker).

Max. working pressure:
420 bar.

Operating Temperature:
+5°C to +80°C

Memory store:
300 test (scrolling memory) capacity.

Computer compatibility:
Interface via RS 232 connection @ 9600 baud rate.

Portability:
15 kg. ACM20 has its own battery pack and carry case with wheels.

Power requirement:
Rechargeable battery powered or via the 12vDC input.

System connection:
Via Millipore adaptor with flow restriction through supplied needle valve.

Certification:
Complies with all relevant EC declarations of conformity.

Printer facility:
No printer. Data download only.

Online Commission Kit

a – icountACM20 Zone II Particle Counter
b – Battery Charger
c – Process Cable
d – User Manual
e – Downloader Software
f – Throttle Kit
g – Millipore Adaptor Assembly
h – Aluminium Case
i – Bottle Assembly





Specification

Construction:
Unit: Stainless Steel
Carrying case: ABS
Hand-held display: ABS
Keypad: polyester membrane

Mechanical components:
Brass, plated steel, stainless steel and aluminium

Seals: Fluorocarbon

Hoses: Nylon (Kevlar braided microbore)

Fluid compatibility:
All fuels. For other fluids consult Parker

Internal rechargeable battery:
Note: ONLY to be charged outside of the hazardous area, with the unit switched off

Fuse:
1.25A fast blow fuse included for overload protection
Return to Parker Hannifin if fuse is blown

icountACM20 2032 technology:
Unique optical scanning system

Applications in Fuels

- **Oil Refinery**
  - To count and verify the levels of dispersed contamination in accordance with specification limits. (Consult Parker CMC).
- **Distribution Terminals/Hubs**
  - For use on receipt and outbound supply. Also to provide filtration performance, tank cleanliness and product quality checks.
- **Storage**
  - Settling times can be reduced by monitoring with the ACM by ensuring that levels of dispersed contamination are below acceptable levels.
- **Airport Fuel Farm**
  - Monitoring of fuels into storage, through the fuel farm, hydrant system and during uplift into wing.
- **Pipeline Commissioning**
  - Fast real time monitoring of pipelines following pigging and cleaning processes.
- **Oil and Gas Platforms**
  - Used to monitor the filtration performance, system cleanliness and quality of delivered product.

Using icountACM20 Z2

icountACM20 Z2 is designed to be used to monitor various fuels from existing sampling points in hazardous locations from refineries, pipelines, distribution terminals, airport fuel supply systems all the way through to the point of uplift into aircraft. With Zone II classification, the icountACM20 Z2 is the worlds **only** ATEX approved particle counter.







icountACM20 Z2

ATEX Approved Portable Particle Counter

Installation Details

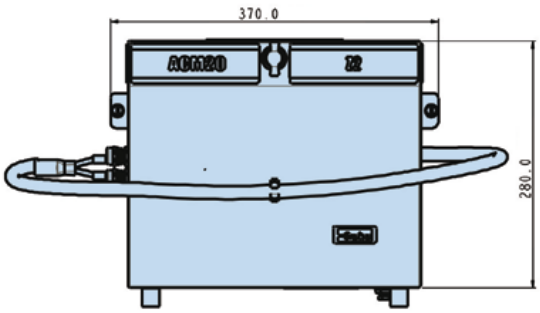

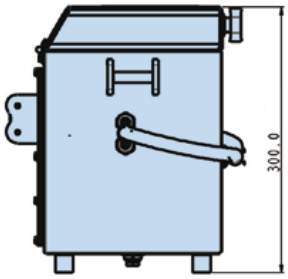

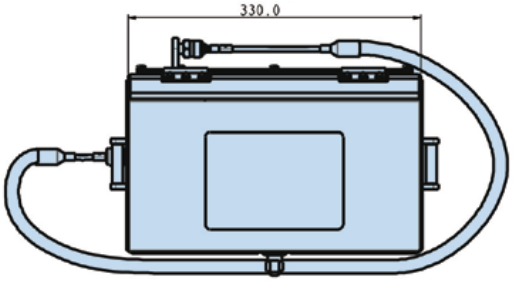

Ordering Information

Standard products table - icountACM20 Z2

Product number	Supersedes	Description
ACM202032UK	N/A	icountACM20 Z2 + online kit & UK battery charger
ACM202032US	N/A	icountACM20 Z2 + online kit & US battery charger
ACM202032EUR	N/A	icountACM20 Z2 + online kit & Euro battery charger
ACC6NE023	B84647	UK battery charger
ACC6NE025	B84652	US battery charger
ACC6NE024	B84653	Euro battery charger
ACC6NE027	B84650	2m process cable assembly
ACC6NE006	B84816	Parsmart downloader software
ACC6NE028	P843066	Carry case
ACC6NW003	B84746	Bottle assembly
ACC6NE029	B84745	Throttle kit
ACC6NE001	B84645	Millipore adaptor assy

Tel: +45 63 12 83 00 | Email: ps@hymatik.com | www.hymatik.com | Hvidkaervej 27a, DK-5250 Odense SV, Denmark

Applications in hydraulics

OFFSHORE

Solutions in the offshore industry.
In addition, the icountACM20 Z2 can be used in many hydraulic system applications as detailed below.

In many industries, worker awareness needs to be maintained at a high level to ensure the safety of their operation. This is particularly relevant to offshore oil-drilling and gas-drilling crews, given the interactive and hazardous nature of their work. The Zone II ACM portable particle analyser is a tried and tested technology designed, proven and approved as a fluid contamination monitor that crews are using and trusting in such hazardous and demanding environments.

- Certified to CE Ex II 3 G Ex nR/nL IIC T6
- Can be used in explosive and hazardous areas, including Offshore and Mining.
- Primary Output. Six cumulative particle size channels ranging from ≥4µm(c) to ≥30µm(c) and numbers per ml in accordance with ISO4406-1999.



REFINERIES



icountACM20 Z2 – operational in oil refineries and fuel fields.
Already operational in oil refineries and designed to be used inside commercial airfield fuel locations and at the point of upload of fuel into the aircraft, icountACM20 Z2 has an impressive success record in this approval sensitive area of operation.

With a number of safety features designed in as operational standards, the icountACM20Z2 can be taken to the point of use, connected in moments and reporting in little more than 2 minutes to ISO approved standards.

- Assembled in an approved and certified stainless steel enclosure to comply with ATEX Directive 94/9/EC and EN50 021 requirements.
- 'A' Class product defined for the aviation market.
- Designed for on-line operation, connecting to the process line via existing Millipore™ fittings, already in use for other industry equipment.

QUARRYING

Applications in other hazardous environments.

- Railroad equipment manufacturer - Warranty protection.
- Power generation stations - Preventative maintenance.
- Mobile equipment - Roll-off cleanliness testing.
- Mining operations - Service tool.
- Steel mills - Preventative maintenance.



Tel: +45 63 12 83 00 | Email: ps@hymatik.com | www.hymatik.com | Hvidkaervej 27a, DK-5250 Odense SV, Denmark

icountACM20 Z2

ATEX Approved Portable Particle Counter

Average Particle Counts in AV System

The table below gives estimated counts found in a typical aviation fuel distribution system, and is given as guidance, in which API/EI filtration equipment is installed.

Receipt into Microfilter
Expect 2,500 counts per ml
or cleaner @ 4µ(c)

MF

Receipt into FWS (After MF)
Expect 500 counts per ml
or cleaner @ 4µ(c)

FWS

Receipt into Storage (After FWS/MF)
Expect 100 counts per ml
or cleaner @ 4µ(c)

Airport storage

FWS out of storage
Expect 500 counts per ml
or cleaner @ 4µ(c)

FWS

After FWS into Hydrant
Expect 100 counts per ml
or cleaner @ 4µ(c)

To Hydrant/Refueller

After Monitor Into Aircraft
Expect 100 counts per ml
or cleaner @ 4µ(c)



Note: Figures will vary from location to location.
Key: MF=Microfilter (API/EI 1590)
FWS=Filter Water Separator (API/EI 1581)

Receipt into Microfilter		ISO Code - 4406 1999
	High Count	High Count Code
≥4µ(c)	2,500	18
≥6µ(c)	350	15
≥14µ(c)	10	10

Receipt into FWS (After MF)		ISO Code - 4406 1999
	High Count	High Count Code
≥4µ(c)	500	16
≥6µ(c)	50	13
≥14µ(c)	5	9

Receipt into Storage (After FWS/MF)		ISO Code - 4406 1999
	High Count	High Count Code
≥4µ(c)	100	14
≥6µ(c)	10	10
≥14µ(c)	1	7

FWS Out of Storage		ISO Code - 4406 1999
	High Count	High Count Code
≥4µ(c)	500	16
≥6µ(c)	50	13
≥14µ(c)	5	9

After FWS Into Hydrant		ISO Code - 4406 1999
	High Count	High Count Code
≥4µ(c)	100	14
≥6µ(c)	10	10
≥14µ(c)	1	7

After Monitor Into Plane		ISO Code - 4406 1999
	High Count	High Count Code
≥4µ(c)	100	14
≥6µ(c)	10	10
≥14µ(c)	1	7

Parker Kittiwake

Condition Monitoring Products



On-line and On-site solutions for condition monitoring of critical plant and machinery.

Parker Kittiwake condition monitoring equipment and predictive maintenance systems:

Parker Kittiwake sensors and equipment facilitate rapid, informed decision making, allowing the user to manage risk, reduce downtime, optimize efficiencies and maximize profit.



Contact Information:

Parker Hannifin
Hydraulic Filter Division Europe

European Product Information Centre
Freephone: 00800 27 27 5374
(from AT, BE, CH, CZ, DE, EE, ES, FI, FR, IE, IT, PT, SE, SK, UK)
filtrationinfo@parker.com

www.parker.com/hfde

Product Features:

- The Parker Kittiwake fdMplus provides instantaneous metallic wear debris results for immediate machine condition assessment.
- Parker Kittiwake DIGI Field Test Kits give Lab grade accuracy in a field deployable test kit.
- The Parker Kittiwake Low Range DIGI Water Test Kit provides simple, accurate results for water in oil.
- The Parker Kittiwake MHC Bearing Checker is a simple to use, entry level AE device.
- The Heated Viscometer from Parker Kittiwake provides laboratory grade oil viscosity results in minutes.

MHC Bearing Checker

The MHC Bearing Checker is a new, unique hand-held instrument, providing maintenance engineers with an easy to operate, simple to use and quick method of analysing bearing condition and lubrication state.

The MHC-Bearing Checker monitors high frequency Acoustic Emissions (AE) signals naturally generated by deterioration in rotating machinery. The unique way of detecting and processing these signals gives you condition-related information in the easiest possible form. It is a state-of-the-art Condition Monitoring instrument with extreme sensitivity to developing faults.

How does it work?

As the mechanical condition of machinery deteriorates, energy loss processes such as impacts, friction and crushing, generate sound wave activity that spans a broad range of frequencies.
By detecting only the high frequency part of this signal with special AE sensors, it is possible to detect miniscule amounts of activity (e.g. a slight rub, a brief impact or the crushing of a single particle in the lubricant). The patented MHC sensor gives improved repeatability and is remarkably rugged. A magnetic front face allows easy attachment to multiple machines.



Easy to use and interpret parameters for quick analysis

Simply attach the unit via the magnetic sensor head and within 10 seconds, both dB Level and Distress® values will be displayed. dB Level is an indication of the overall noise of the bearing and is dependent on speed. It increases with speed of rotation, but also with degradation of the bearing or inadequate lubrication. Distress® gives an instant indication of the state of the bearing's health. A reading below 10 generally indicates normal operation, higher than 10 is usually indicative of bearing damage or the need for attention.

Distress® and dB Level are the fundamental parameters of the high-end MHC-Memo products and are trusted by thousands of maintenance engineers and technicians worldwide.
These are now available in a low cost, easy to interpret pocket size instrument.

The unit is powered by an internal rechargeable battery, offering up to 1000 measurements between charges. Recharging is accomplished through a micro USB port and the unit can be connected to any standard PC USB port for ease of recharging. Can you afford not to equip all of your maintenance staff with a unit?

Specifications

Sensor	
Sensing element	Resonant piezoelectric at ~ 100 kHz
Calibration	Factory set

Signal Measurement	Description	Range	Resolution
Distress ® (dst)	Fault indicating parameter	0 to 40	1 unit
dB Level (dB)	Logarithmically scaled mean signal level	10 to 80 dB	1 dB

Features	
Display	LCD, 2 lines by 8 characters
Distress ® Display	Numeric or Text ("OK" if <10, "Suspect" if between 10 & 15, "Poor" if >15)
Reading in progress	Flashing LED indicator (in addition to LCD display message)
Non-Volatile Memory	Shows last taken readings when unit is switched on
Auto Shut-Off	Instrument auto switches off 30 seconds after last button press
Internal Batteries	NiMH rechargeable battery via micro USB port - Typically over 1000 measurements between charges
Operating Temperature	0°C to 65°C
Overall Dimensions	98 mm x 62 mm x 34 mm (including magnetic sensing head)
Weight	225 g

Features and Benefits:

- Last measurement recall
- Simple one-handed operation
- Rechargeable through USB port
- Ease of operation

Target Applications:

- Bearings
- Gearboxes
- Motors
- Pumps

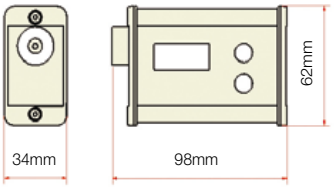

Tel: +45 63 12 83 00 | Email: ps@hymatik.com | www.hymatik.com | Hvidkaervej 27a, DK-5250 Odense SV, Denmark

ANALEXfdMplus

The ANALEXfdMplus is a highly accurate instrument designed to measure the contamination of an oil sample with ferrous wear metal particles.

What's new

The ANALEXfdMplus utilises a novel sample adaptor system to measure from any of the following sample media;

- 50ml Bottle
- 10ml Syringe
- 5ml Syringe
- 5ml Test Tube
- 4ml Grease Pots

The ANALEXfdMplus measures un-combined ferrous wear debris in oil or grease samples taken from a variety of types of machinery. Suitable for field and laboratory use, the ANALEXfdMplus provides you with the ability to successfully monitor your equiment, preventing costly machinery downtime.

Contained in a fully portable case, it's rugged design is ideal for testing and analysing oil samples both in the laboratory or in the field. Supplied with an optional 12 V convertor, it is ideal for use in remote locations where full laboratory analysis is not possible. Samples may be presented for measurement in a variety of media, offering you full flexibility of use. Ferrous debris is measured directly from the oil or grease in the sample container, providing you with a quick, simple and clean method of analysis.

Data from each test is stored in the internal memory, which may then be transferred to a host PC via an RS232 interface. Data can then be fully analysed and trends easily monitored by importing into a database.

Features



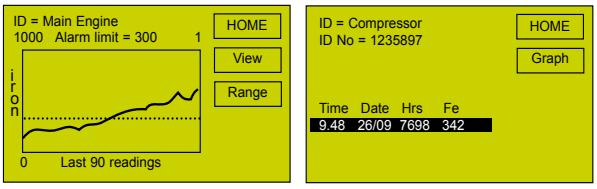

Supplied with:

Calibration and Check Standards, Power Adaptor, RS232 Connector, Sample Adaptors, Range of Sample Media.

Data entry

Data entry is via a simple and intuitive touch pad screen, with full alphanumeric keypad and backlit graphics display, for clear user prompts and easy viewing of results. The following parameters can be recorded:



- Automatic date and time linked to each equipment or sample number.
- Equipment number or identification.
- Sample number or dentification.
- Lubricant Hours (0 - 999999 hrs).

The results are shown in a tabular display and in graphical format to enable trending by machine or equipment number.

Specifications

Product Code:	FGK17144PA
Messaurement Range (approx PPM):	50 ml Bottle 0 - 2500 ppm 10 ml Syringe 0 - 19000 ppm 5 ml Syringe 0 - 34000 ppm 5 ml Tube 0 - 28000 ppm 4 ml Grease Pot 0 - 8000 ppm
Display Resolution:	1 ppm
Sample Media:	50 ml Sample Bottles, 10ml Syringes, 5 ml Syringes & Test Tubes, 4ml Grease Pots
Test Time:	< 1 minute to stabilise from power on < 15 seconds per sample
Power:	110 - 250 VAC autoselected 50/60 Hz
Fuse Rating:	2.5 A 250 VAC HRC A/S T ceramic
Opem Temp. Range:	15 - 40 °C (60 - 104 °C)
Weight:	4.22 kg

Accessories and Consumables

FGK14946PA	x 360 off 50 ml Sample Bottles
FGK15005PA	x 3000 off Grease Pots
FGK17074PA	x 1000 off 5 ml Test Tubes
FGK17075PA	x 500 of 10 ml Syringes
FGK17076PA	x 500 off 5 ml Syringes

Heated Viscometer

Make fast on-site maintenance decisions with Parker Kittiwake's Heated Viscometer, providing laboratory grade oil viscosity results in minutes.

The Parker Kittiwake Heated Viscometer provides a condition monitoring tool that enables you to make informed operational and maintenance decisions about your critical plant and equipment. Fuel and lubricating oils form a major cost element in the operation of almost all industrial machinery and engines; the quality must be closely monitored to protect the investment. The ability to test on-site, at the point of use, enables engineers and facilities managers to conduct oil analysis quickly and easily. Detecting out-of-spec fuels or lubricants can identify potential problems before equipment damage occurs.



Viscosity is regarded an oils most important characteristic. It is the viscosity that shows the oil's resistance to flow and the strength of the oil film between surfaces. Viscosity can increase or decrease as a result of problems such as contamination, fuel dilution and shear thinning. Measurement of viscosity is extremely important for hydraulic oils, diesel engine oils, gears and fuel oils.

The heated viscometer measures at the actual temperature and is designed to 'Tilt' from side to side in both directions, allowing the ball to fall under gravity and the viscosity of the oil calculated automatically.

- Monitoring viscosity gives an early warning for a range of common problems.
- Highly accurate results with three readings are available at 40°C, 50°C or 100°C.
- Test an even greater range of oils, by changing the viscosity index or density.
- Estimate the combustion performance (CCAI) of fuel oil.
- Heavy duty, robust equipment - ideal for long term use with rapid results.



Ordering information

FGK1200PA: Heated Viscometer	
Range:	Calculated Viscosity at 40 °C, 50 °C and 100 °C, Calculated Carbon Aromaticity Index (CCAI).
Display:	8 Digit LED
Keypad:	Membrane type with tactile buttons
Power:	110 to 240 AC 50/60 Hz

Test Kit contains Heated Viscometer, power supply and all consumables in a portable robust metal case.

Low Range DIGI Water Kit

At the heart of Parker Kittiwake's on-site oil test solution range is the DIGI Test Cell, providing simple, accurate results for Water in Oil.

With an easy to read digital display providing instructions and results, a five year (10,000 tests) battery life and built in memory for recording previous test results, the Parker Kittiwake DIGI Cell has become a favoured test method worldwide for on-site and on-board testing.





Water in Oil

Maintain and protect your equipment, whilst eliminating damage caused by water in your oil.

The DIGI Water in Oil Test Kit provides state of the art, digital analysis and gives fast, accurate results for easy monitoring of trends.

- Prevent corrosion, cavitation or failure of your machinery by detecting water in oil, before any damage occurs.
- Minimise instability of additive packages and damaging microbe growth by monitoring your oil.
- Fully portable for use on-board or in the field, test cells are extremely robust, durable and easy to use.



Reagents, Spares and Consumables

Parker Kittiwake test kits for individual parameters contain reagents, consumables and full instructions for multiple tests.

- Replacement reagents can be ordered at short notice.
- Kits contain all necessary equipment for instant test results in the field.
- Reagents are packed in accordance with IATA/IMDG/IRD Air/Marine/Road Transportation codes and can be delivered to major ports world-wide.

Ordering information

FGK17032 PA: Low Range DIGI Water Kit FGK2101PA: EasySHIP Water in Oil Reagent Pack (50)	
Range (LR):	0.02 - 1%, 100 - 3000 ppm, 0 - 10%
Test Time:	3 minutes
Battery Life:	Fie years (10.000 test)

Tel: +45 63 12 83 00 | Email: ps@hymatik.com | www.hymatik.com | Hvidkaervej 27a, DK-5250 Odense SV, Denmark

DIGI Field Kit

A low cost kit allowing mulitiple oil parameters to be measured in the field including:

Viscosity

The ECON Viscostick gives a simple go / no-go result. Typically it will detect 5-10% distillate fuel dilution of an SAE 30 to 40 engine oil as well as increases in viscosity due to oil contamination.

Total Acid Number (TAN)

Testing for TAN is essential to maintain and protect your equipment, preventing damage in advance.

Measure both the weak organic and strong inorganic acids present within an oil with the Parker Kittiwake TAN Test. A rise in TAN is indicative of oil oxidation due to time or operating temperature.

- Test kit is supplied with up to fifty tests, enabling you monitor TAN level trends.
- Simple to use drop test - the result is shown by a colour change, providing you with easy to interpret results, suitable for use by non-technical personnel.

Insolubles

Monitor combustion related debris and oxidation products.

High insolubles will cause lacquer formation on hot surfaces, sticking of piston rings and wear of cylinder liner and bearing surfaces. The detergent property of the oil will also decrease, speeding further deterioration.

- Detect insolubles from diesel engine combustion products such as fuel ash, carbon, partially oxidised fuel, oil oxidation products and spent lubricant additive.
- Simple and quick to use, the Insolubles tests available give you actionable results, helping prevent engine damage.



Water in Oil

Maintain and protect your equipment, whilst eliminating damage caused by water in your oil.

The DIGI Water in Oil Test Kit provides state of the art, digital analysis and gives fast, accurate results for easy monitoring of trends.

- Prevent corrosion, cavitation or failure of your machinery by detecting water in oil, before any damage occurs.
- Minimise instability of additive packages and damaging microbe growth by monitoring your oil.
- Fully portable for use on-board or in the field, test cells are extremely robust, durable and easy to use.

Total Base Number (TBN)

The DIGI TBN Test Kit provides state of the art, digital analysis and gives fast, accurate results for in-depth monitoring of trends.

The ECON TBN Test Kit gives a rapid indication of TBN depletion in lubricants.

- Avoid fouling within the engine and corrosion of engine components by monitoring the Total Base Number (TBN) of your lubricating oils
- Simple, economical monitoring of lubricants

Reagents, Spares and Consumables

Parker Kittiwake test kits for individual parameters contain reagents, consumables and full instructions for multiple tests.

- Replacement reagents can be ordered at short notice.
- Kits contain all necessary equipment for instant test results in the field.
- Reagents are packed in accordance with IATA/IMDG/IRD Air/ Marine/Road Transportation codes and can be delivered to major ports world-wide.

Ordering Information - Kit

Part Number	Description	Tests Included	Range
FGK1108PA	DIGI Field Kit	DIGI Combined Water in Oil / TBN Cell ECON Insolubles Test ECON Viscostick ECON TAN Test	0.02-1%, 200-10000 ppm, 0-10%, 0-20% /0-80 TBN qualitative go/no go TAN: 0-6

Ordering Information - Consumables

Part Number	Description	Number of Packs
FGK24743PA	ECON TAN Drop Test Kit	25 Packs
FGK2003PA	Insolubles Reagent Pack	50 Packs
FGD2101PA	EasySHIP Water in Oil Reagent Pack	50 Packs
FGK2002PA	Total Base Number Reagent Pack	50 Packs

ASIC 'Performer'

Pressure Transducers and Transmitters
25, 60, 100, 250, 400 and 600 bar



One product range, designed for many industry applications

All Stainless Steel Construction

A quality range of transducers and transmitters with pressure ratings - 25, 60, 100, 250, 400 and 600 bar. One-piece body and diaphragm machining ensures long-term stability and an all Stainless Steel construction ensures reliability. A cost-effective solution in many industrial applications.



Contact Information:

Parker Hannifin
Hydraulic Filter Division Europe

European Product Information Centre
Freephone: 00800 27 27 5374
(from AT, BE, CH, CZ, DE, EE, ES, FI, FR, IE, IT, PT, SE, SK, UK)
filtrationinfo@parker.com

www.parker.com/hfde

Product Features:

- A quality range of transducers and transmitters with pressure ratings - 25, 60, 100, 250, 400 and 600 bar.
- One-piece body and diaphragm machining ensures long-term stability.
- All Stainless Steel construction.
- Cost-effective solution in many industry applications.
- 0-5 Volt, 1-6 Volt Transducers.
- 4-20mA Transmitters.
- 1/4 " BSP thread.
- M12 or MicroDIN plug options.

ASIC 'Performer'

Pressure Transducers and Transmitters

Applications for the ASIC Performer

- Fork lift trucks - braking and load systems.
- Truck mounted cranes - load safety systems.
- Earth moving machinery - hydraulic gearbox control.
- Racing car - gearbox, fuel, cooling and suspension systems.
- Water usage systems - pressurised systems for industrial and hi-rise usage.
- Forest Machinery - felling and logging.
- Paper mills - speed control and weighing systems.





The Parker Filtration ASIC Performer Pressure Transducers and Transmitters.



The ASIC Performer offers a wide range of pressure sensors for mobile or industrial applications.

These sensors have been designed for the requirements of industrial instrumentation systems. Accordingly, the housings and all components in contact with the medium are made of stainless steel. Thus giving compatibility with a wide range of media. There is a choice of two plug connectors of either DIN or M12. There are six measuring ranges available and a choice of outputs in the form of either voltage or current signals. Sensors with output signals from 4...20 mA are available in two wire technology.

The built-in voltage regulator allows the sensors to be operated with a supply voltage of 12-36/9-36 Vdc. All sensors are manufactured in our own production facility, typical of Parker Hannifin's continued commitment to flexibility and quality.



The Complete Performer range utilises ASIC technology (Application Specific Integrated Circuit) programmable software.





AC/DC display unit (DDU10012 or DDU1002)

A comprehensive range of Pressure Transducers and Transmitters are available from Parker Filtration.

- One-piece body and diaphragm machining ensures long-term product stability.
- All stainless steel construction.
- 6 transducer pressure ratings with 0-5Vdc and 1-6Vdc outputs.
- 6 transmitter pressure ratings with a 2-wire 4-20mA output.
- Microdin plug and M12 connector options.

Parker Hannifin
Hydraulic Filter Division Europe
FDHB500UK/ASIC

Specification

Pressure ranges:
25, 60, 100, 250, 400, 600 bar.

Pressure Tolerance Specifications:

Rating	Maximum Overload Pressure	Maximum Burst Pressure
25	x 2 (50 bar)	x 3 (75 Bar)
60	x 2 (120 Bar)	x 3 (180 Bar)
100	x 2 (200 bar)	x 3 (300 Bar)
250	x 2 (500 Bar)	x 3 (750 Bar)
400	x 2 (800 Bar)	x 3 (1200 Bar)
600	x 2 (1200 Bar)	x 2.5 (1500 Bar)

Vibration resistance:
IEC 60068-2-6:
+/- 5mm/10Hz...32Hz
200m/s^2 / 32Hz...2kHz

Installation:
Spanner size 22A/F.
Max. (recommended) tightening torque = 30Nm.

Weight:
200 - 230g

Lifespan:
10 million cycles

Thread Forms

G1/4 (1/4BSP) with ED seal.

All thread forms and sensor interface are made from 1.4301 stainless steel.

Non standard threads - contact Parker CMC

Electrical

Supply voltage	Output
12 - 36Vdc	0 - 5Vdc
12 - 36Vdc	1 - 6Vdc
9 - 36Vdc	4 - 20mA

Transducer current draw = <6mA
Load impedance (ohm) = >10K
Output signal noise = 0.1%FS

Product Performance

Linearity:
Typical: 0.3%FS.
Max: 0.6%FS.

Hysteresis:
Typical: 0.1%FS.
Max: 0.25%FS.

Repeatability:
Typical: 0.2%FS.
Max: 0.4%FS.

Functional temp range:
-40°C to +85°C.

Compensated temperature:
-20°C to +85°C.

Stability:
<0.1%FS/a (typ).

Response time:
= <1mS.

Wiring Information

Connector Industrial Micro Din 9.4mm

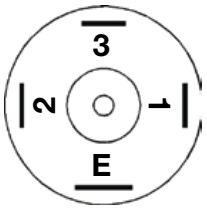

PIN	4 - 20mA	0 - 5Vdc	1 - 6Vdc
1	Do not connect	Signal output	Signal output
2	Supply +ve	Supply +ve	Supply +ve
3	Do not connect	Do not connect	Do not connect
E	Return	Supply ref. (0v)	Supply ref. (0v)

Connector M12

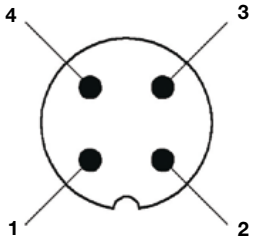

PIN	4 - 20mA	0 - 5Vdc	1 - 6Vdc
1	Supply +ve	Supply +ve	Supply +ve
2	Do not connect	Signal output	Signal output
3	Return	Supply ref. (0v)	Supply ref. (0v)
4	Do not connect	Do not connect	Do not connect

Installation Details

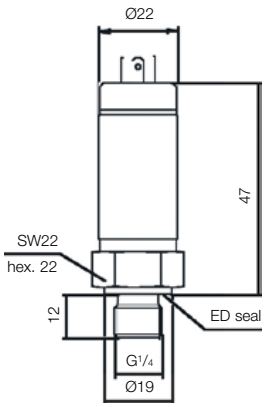

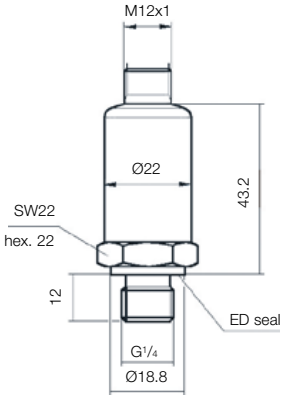

ASIC 'Performer'

Pressure Transducers and Transmitters

Ordering Information

Standard products table

Product number	Description - pressure transducer	Model	Output	Pressure	Thread form	Connector
PTDVB2501B1C1	0 - 5 Vdc 250 bar 1/4 BSP ED seal micro-din	PTD	VB	250	1	B1C1
PTDVB4001B1C1	0 - 5 Vdc 400 bar 1/4 BSP ED seal micro-din	PTD	VB	400	1	B1C1
PTDVB2501B1C2	0 - 5 Vdc 250 bar 1/4 BSP ED seal M12	PTD	VB	250	1	B1C2
PTDVB4001B1C2	0 - 5 Vdc 400 bar 1/4 BSP ED seal M12	PTD	VB	400	1	B1C2
PTDVB0251B1C1	0 - 5 Vdc 25 bar 1/4 BSP ED seal micro-din	PTD	VB	025	1	B1C1
PTDVB0251B1C2	0 - 5 Vdc 25 bar 1/4 BSP ED seal M12	PTD	VB	025	1	B1C2

Product number	Description - pressure transmitter	Model	Output	Pressure	Thread form	Connector
PTXB4001B1C2	4 - 20 mA 400 bar 1/4 BSP ED seal M12	PTX	B	400	1	B1C2
PTXB0251B1C1	4 - 20 mA 25 bar 1/4 BSP ED seal micro-din	PTX	B	025	1	B1C1
PTXB0251B1C2	4 - 20 mA 25 bar 1/4 BSP ED seal M12	PTX	B	025	1	B1C2
PTXB4001B1C1	4 - 20 mA 400 bar 1/4 BSP ED seal micro-din	PTX	B	400	1	B1C1
PTXB2501B1C1	4 - 20 mA 250 bar 1/4 BSP ED seal micro-din	PTX	B	250	1	B1C1
PTXB2501B1C2	4 - 20 mA 250 bar 1/4 BSP ED seal M12	PTX	B	250	1	B1C2

Accessories

Product number	Supercedes	Description
P833PVC2M	P.833PVC-2M	2 meter PVC coated 4 core cable
P833PVC5M	P.833PVC-5M	5 meter PVC coated 4 core cable
P833PVC10M	P.833PVC-10M	10 meter PVC coated 4 core cable

Note 1: Part numbers featured with bold highlighted codes will ensure a 'standard' product selection.
Note 2: Alternate displayed part number selection will require you to contact Parker Filtration for availability.

Product configurator

Product number	Output options		Pressure range (bar)		Thread form		Connector	
PTD	**VB**	0 - 5 Vdc	**025**	0 - 25	**1**	1/4 BSP with ED seal	**B1C1**	Micro-din
PTX	SB	1 - 6 Vdc	060	0 - 60			**B1C2**	M12
	B	4 - 20mA (PTX only)	100	0 - 100				
			250	0 - 250				
			400	0 - 400				
			600	0 - 600				

Note 1: Part numbers featured with bold highlighted codes will ensure a 'standard' product selection.
Note 2: Alternate displayed part number selection will require you to contact Parker Filtration for availability.

Examples of standard part number product ordering

PTDVB2501B1C1 0 – 5 volt output transducer
250 bar maximum pressure
1/4" BSP with ED seal
Industrial micro-din 9.4mm connector

PTDSB4001B1C2 1 – 6 volt output transducer
400 bar maximum pressure
1/4" BSP with ED seal
M12 connector
(See accessories for IP68 protected cable)

PTXB0251B1C2 4 – 20mA output transmitter
25 bar maximum pressure
1/4" BSP with ED seal
M12 connector
(See accessories for IP68 protected cable)

Flowmeters & Monitors

A range of cost saving solutions



Protect systems, reduce fluid and air loss and increase efficiency

Effective and accurate flow measurement

An extensive range of flow metering products. LoFlow oil and water flowmeters. 10 bar max. working pressure. Easiflow meters and flowswitches with flows from 1 to 150 l/min. Dataflow 4-20mA and pulse output flow transmitters and the Dataflow Compact inline flow transmitter. Flowline oil, water and air calibrated flowmeters and flowswitches available in brass or Stainless Steel. Hydraulic Test Units for the speedy diagnosis of hydraulic circuit faults with flow ranges from 2 to 360 l/min.



Contact Information:

Parker Hannifin
Hydraulic Filter Division Europe

European Product Information Centre
Freephone: 00800 27 27 5374
(from AT, BE, CH, CZ, DE, EE, ES, FI, FR, IE, IT, PT, SE, SK, UK)
filtrationinfo@parker.com

www.parker.com/hfde

Product Features:

- LoFlow oil and water flowmeters. 10 bar max. working pressure.
- Easiflow meters and Flowswitches. Work in any plane. Flows from 1 to 150 l/min.
- Dataflow 4-20mA and pulse output flow transmitters and Dataflow Compact inline flow transmitter.
- Flowline oil, water and air calibrated flowmeters and flowswitches available in brass or Stainless Steel.
- Hydraulic Test Units for the speedy diagnosis of hydraulic circuit faults with flow ranges from 2 to 360 l/min.

LoFlow - Oil and Water Flowmeters

Flowmeters

Features & Benefits



- Easy to read, permanent printed scales.
- Large scale definition for precise measurement.
- Easy panel mounting assembly.
- Negligible pressure drop characteristics.
- 10 bar pressure rating.
- Simple to use.

Specification

Construction:

Body	Grillon TR55.
Back body half	ABS 7020.
Ball retainer	ABS 7020.
Back panel	PVC.
Float	See below.

Maximum working pressure:
10 bar.

Maximum working temperature:
60°C.

Accuracy:
±2% typical.

Repeatability:
±1%.

Connections:
1/4" and 3/4" tapered threads.

Note: Always install vertically.

Installation Details

Simple to fit, easy to use

The LoFlow meter has been designed for those industries where the need exists for a low cost solution to small measurements of flow with an accurate reading. LoFlow uses the well tried and tested principle of variable area flow measurement utilising the movement of a ball or float inside a calibrated tapered bore.

Typical Applications

Pharmaceutical industry
Filtration systems
Hospital equipment
For water applications
Water treatment
Photography and X-ray Equipment
Swimming pools

Installation Details

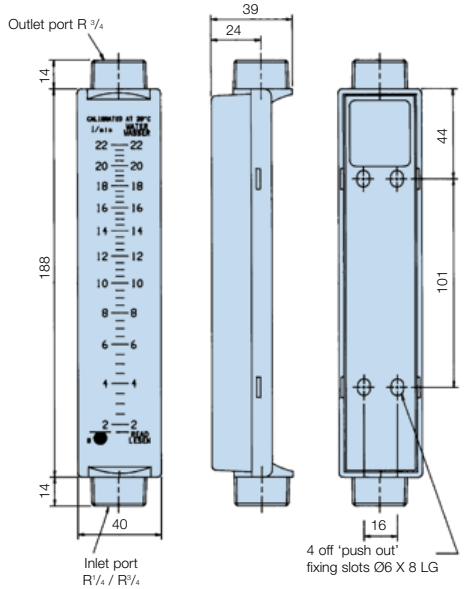

Ordering Information

Standard products table

Product number	Supersedes	Media	Ports (BSPT male)	Flow range (l/min)	Float material
LF802412	LF.2020	Water	3/4 - 3/4	0.2 - 2.0	Acetal
LF802413	LF.2100	Water	3/4 - 3/4	2.0 - 10.0	S/Steel
LF802414	LF.2220	Water	3/4 - 3/4	3.0 - 22.0	S/Steel
LF801431	LF.1002	Oil	1/4 - 3/4	0.010 - 0.20	S/Steel
LF802432	LF.1009	Oil	3/4 - 3/4	0.1 - 0.9	Acetal
LF802434	LF.1090	Oil	3/4 - 3/4	1.0 - 9.0	S/Steel
LF801411	LF.2005	Water	1/4 - 3/4	0.06 - 0.55	S/Steel

Note 1: Part numbers featured with bold highlighted codes will ensure a 'standard' product selection.
Note 2: Alternate displayed part number selection will require you to contact Parker Filtration for availability.

Parker Hannifin
Hydraulic Filter Division Europe
FDHB500UK/Flow

Easiflow - Meters and Flowswitches

Flowmeters

Features & Benefits



- Oil and water calibrated.
- Works in any plane.
- Pressures up to 10 bar.
- Flows from 1 to 150 l/min.
- Accuracy ±5% FSD.
- Repeatability ±1% FSD.
- Switches – fully adjustable flow rate signalling.
- Plant and equipment protection.



Easiflow Meters Specification

Construction:

Cone	Acetal
Viewing glass	Borosilicate glass
Calibrated spring	Stainless steel
Seal	Nitrile
Body	Glass filled nylon

Maximum working pressure:
10 bar.

Minimum working pressure:
1 bar.

Temperature range:
+5°C to +80°C - Oil.
+5°C to +60°C - Water.

Flow rate:
1 to 150 l/min.

Viscosity range:
10 to 200 centistokes (oil).

Accuracy:
±5% FSD.

Repeatability:
±1% FSD.

Connections:
1" BSP parallel threads.

Weight:
0.4kg.

Flowswitch Specifications

The Easiflow switch is a flow measuring device incorporating an AC/DC switch suitable for controlling valves or pump motors or for activating alarm signals.

General flowmeter specification:
See material details opposite.

Switch type specifications:
Magnetically operated reed switch.

Electrical details:

Voltage range	300Vac/dc
Maximum current	2.5Amps
Maximum load	100W resistive 70W inductive

CE

Installation Details

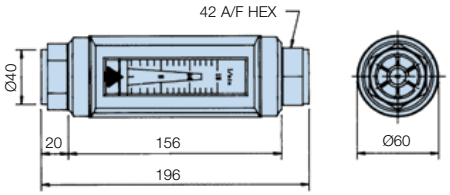

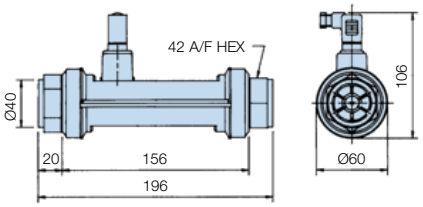

Ordering Information

Standard products table – Flowmeter only

Product number	Supersedes	Media	Flow range (l/min)
EF7731111220	EFW.0302	Water	2 - 30
EF7731112220	EFW.0502	Water	4 - 50
EF7731113220	EFW.1002	Water	5 - 100
EF7731114220	EFW.1502	Water	10 - 150
EF7731110120	EFL.0151	Oil	1 - 15
EF7731111120	EFL.0301	Oil	2 - 30
EF7731112120	EFL.0501	Oil	4 - 50
EF7731113120	EFL.1001	Oil	5 - 100
EF7731114120	EFL.1501	Oil	10 - 150
EF7731110220	EFW.0152	Water	1 - 15

Note 1: Part numbers featured with bold highlighted codes will ensure a 'standard' product selection.
Note 2: Alternate displayed part number selection will require you to contact Parker Filtration for availability.

Standard products table – Flowmeter plus one switch

Product number	Supersedes	Media	Flow range (l/min)	Switch range (l/min)
EF7731110221	ESW.015S1	Water	1 - 15	5 - 15
EF7731111221	ESW.030S1	Water	2 - 30	5 - 30
EF7731110121	ESL.015S1	Oil	1 - 15	5 - 15
EF7731111121	ESL.030S1	Oil	2 - 30	5 - 30
EF7731112121	ESL.050S1	Oil	4 - 50	10 - 50
EF7731113121	ESL.100S1	Oil	5 - 100	20 - 100
EF7731114121	ESL.150S1	Oil	10 - 150	30 - 150
EF7731112221	ESW.050S1	Water	4 - 50	10 - 50
EF7731113221	ESW.100S1	Water	5 - 100	20 - 100
EF7731114221	ESW.150S1	Water	10 - 150	30 - 150

Note 1: Part numbers featured with bold highlighted codes will ensure a 'standard' product selection.
Note 2: Alternate displayed part number selection will require you to contact Parker Filtration for availability.

Dataflow - 4 to 20mA and Pulse Output Flow Transmitters

Flowmeters

Features & Benefits



- 4 to 20mA output.
- Pulse output available for totalising/batching.
- Works in any plane.
- Accepts reverse flow.
- Maximum flow 150 l/min.
- Negligible pressure drop.
- Pressures up to 10 bar.
- Low cost. Simple to install.
- For use with most liquids.
- Factory calibrated. Accuracy ±2%.
- DIN 43650 plug connection (included).

Specification

Construction:
Borosilicate glasstube.
Nitrile seals.
Body – Glass filled nylon.
Rotor and locater – Acetal.
Washers and shaft – Stainless steel.
Rotor tips – Stainless steel.

Max. working pressure:
10 bar oil/water.

Flow indication:
Min: 2 l/min.
Max: 150 l/min.
Accepts reverse flow.

Accuracy:
±2% FSD.

Temp range:
+5°C to +80°C oil.
+5°C to +60°C water.

Connections:
1" BSP parallel threads.

Weight:
0.7Kg.

Calibration 4 to 20mA:
4mA = 0 l/min,
20mA = 100 l/min.

Calibration pulse output per litre:
'K' factors.
Oil = 51.14
Water = 44.25

CE

Electrical details 4 to 20mA:
Supply = 24Vdc.

Pulse output:
Supply = 24Vdc.
(open collector transistor).

Digital Display Specification (DFT 990 only)

For indicator options please refer to MS150 section of the catalogue, reference DDU1001 and DDU1002 indicators

Installation Details

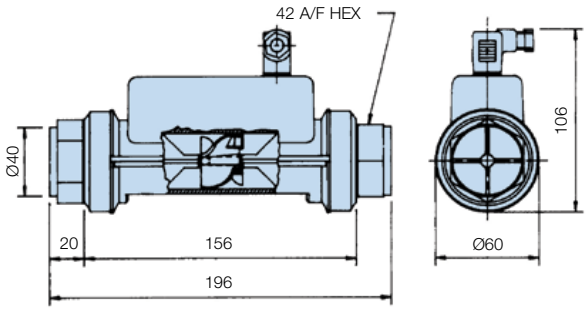

Ordering Information

Standard products table

Product number	Supersedes	Description
DFT980	DFT.980	Dataflow "Pulse" output transmitter
DFT990	DFT.990	Dataflow 4-20mA transmitter

Note 1: Part numbers featured with bold highlighted codes will ensure a 'standard' product selection.
Note 2: Alternate displayed part number selection will require you to contact Parker Filtration for availability.



Dataflow 4-20mA transmitter can be connected to a Digital Display Unit (DDU1001 or DDU1002)

4 to 20mA On-Site Calibration

Set your system to zero flow. Connect a multimeter across terminals 1 (+20mA) and ⏚ (0mA) (Dia. 2). Set the zero to read 4mA on your multimeter (Dia. 1). Set your system to full flow and set the span to read 20mA on your multimeter. (Dia. 1)

Note: Minimum span setting = 30 l/min

Diagram 1

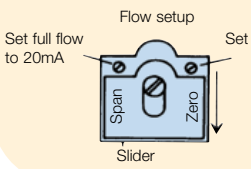

Diagram 2

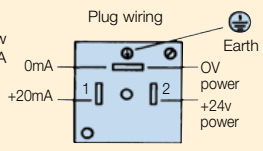

Dataflow Compact - Inline Flow Transmitter

Flowmeters

Features & Benefits



- Pulse output signal for flows up to 25 l/min.
- Lightweight and robust.
- Operates in any plane. Simple to install.
- Low cost flow measurement.
- Negligible pressure drop.
- Accepts reverse flow.
- 3/8 BSP male connection.
- Water or compatible clear fluids only.
- Ideal for washing machines, showers and vending machines.

Specification

Construction:
Body Grilamid – TR55.
Rotor 18% PTFE filled nylon.
Shaft Stainless steel.
Shaft Retainers Grilamid TR55.

Operation:
Infra-red.

Maximum working pressure:
20 bar.

Pressure drop:
Max 0.1 bar at 15 l/min.

Flow range:
1 to 25 l/min.
(Accepts reverse flow).

Calibration:
'K' Factor 752 pulses per litre, typical.
Subject to application.

Accuracy:
±2% typical.

Repeatability:
±1%.

Temperature range:
+5°C to +70°C.

Overall dimensions:
52mm x 29mm x 27mm.

Weight:
16 grams.

Connections:
3/8 BSP

Cable length:
300mm.

Power supply:
5 Vdc.

Output signal:
5 Vdc - square wave

Installation Details

Red wire	+5V supply
Green wire	Output signal
Blue wire	0V supply

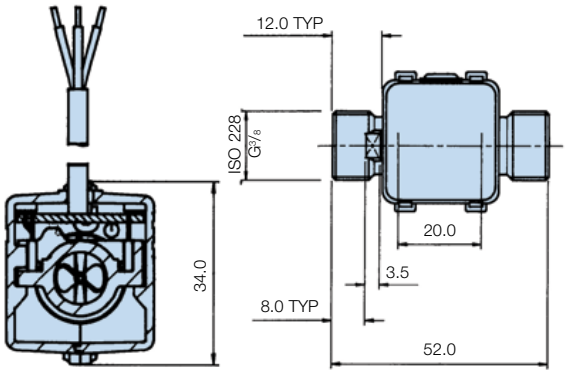

Dataflow Compact – The Low Cost Transmitter

The Dataflow Compact Transmitter was designed to offer OEM's and end users alike a means of monitoring low flows on liquids with an electronic output signal – but at LOW COST. Fluid passes through the one piece sensor body impacting on the twin vaned turbine rotor, causing it to rotate at a speed proportional to the flow rate. Two opposing photo-transistors are mounted either side of the rotor and externally of the clear sensor body, these generate a continuous signal.

As the rotor spins each blade obscures the infra red signal. This is then converted into an industry standard pulse output signal – compatible with inexpensive display units for flow rate, totalising, batch control and large, central control systems. The lightweight Grilamid body with its virtually unrestricted flow path, offers negligible pressure drop for flows up to 25 l/min and withstanding pressures up to 20 bar.

Flow Rate • Totalising • Batch Control and applications in many industries

Dataflow Compact Transmitters are small and very robust having been developed and tested extensively in industry applications where space is a restriction. Dataflow Compact with its Grilamid body and BSP connections can be installed almost anywhere and once installed will give accurate and reliable output signalling.

Ordering Information

Standard products table

Product number	Supersedes	Description
DFC9000100	DFC.9000.100	Dataflow compact flow transmitter

Note 1: Part numbers featured with bold highlighted codes will ensure a 'standard' product selection.
Note 2: Alternate displayed part number selection will require you to contact Parker Filtration for availability.

Parker Hannifin
Hydraulic Filter Division Europe
FDHB500UK/Flow

Tel: +45 63 12 83 00 | Email: ps@hymatik.com | www.hymatik.com | Hvidkaervej 27a, DK-5250 Odense SV, Denmark

Flowline - Oil and Water Calibrated Flowmeters (Brass Version)

Flowmeters

Features & Benefits



- Works in any plane.
- Pressure up to 350 bar (5000 psi).
- Flows up to 360 l/min.
- Accuracy ±5% FSD.
- Repeatability ±1% FSD.
- Direct reading.
- Relatively insensitive to viscosity changes.
- Oil or water calibrated.
- Optional reed switch upgrade.

Specification

Construction:
Brass body to BS 2874 CZ114.

Maximum working pressure:
Up to 350 bar.

Minimum working pressure:
1 bar.

Temperature range:
Brass –20°C to +90°C.

Calibration:
Oil Specific gravity 0.856 at 20°C.
Water Specific gravity 1.0 at 20°C.

Viscosity range:
10 to 200 cSt (oil).

Accuracy:
±5% FSD.

Repeatability:
±1% FSD.

Min. scale reading:
10% FSD.

Connections:
BSP parallel threads.

Wetted/non-wetted parts:
Consult Parker for information.

1/4", 1/2" and 3/4" BSP thread options (1 1/4" version on next page)

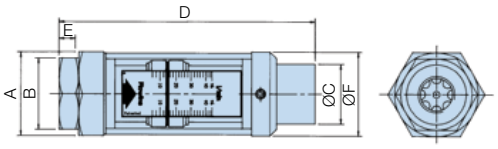

Note: To add an electrically operated reed switch to your flowmeter please order B26307

Ordering Information - Oil

Standard products table

Brass flowmeter for oil					Dimensions (mm)						
Product number	Supersedes	Ports BSP	Flow range (l/min)	Maximum pressure (bar)	A (A/F Hex)	B (A/F Hex)	C	D	E	F	Weight (kg)
FM26122212	FM.26 122 212	1/4	0.5 - 4.5	350	32	29	19	123	7	32	0.4
FM26122312	FM.26 122 312	1/4	1 - 9	350	32	29	19	123	7	32	0.4
FM26222112	FM.26 222 112	1/2	2 - 20	350	41	38	32	165.5	12.5	46	0.9
FM26222212	FM.26 222 212	1/2	5 - 46	350	41	38	32	165.5	12.5	46	0.9
FM26322112	FM.26 322 112	3/4	5 - 55	350	58	46	43	190	15	58	1.75
FM26322212	FM.26 322 212	3/4	10 - 110	350	58	46	43	190	15	58	1.75
FM26122112	FM.26 122 112	1/4	0.2 - 2.0	350	32	29	19	123	7	32	0.4
FM26422112	FM.26 422 112	1 1/4	20 - 180	210	For intallation details for 1 1/4 flowmeters see next page						8.0
FM26422212	FM.26 422 212	1 1/4	30 - 270	210							8.0
FM26422312	FM.26 422 312	1 1/4	40 - 360	210							8.0

Ordering Information - Water

Standard products table

Brass flowmeter for water					Dimensions (mm)						
Product number	Supersedes	Ports BSP	Flow range (l/min)	Maximum pressure (bar)	A (A/F Hex)	B (A/F Hex)	C	D	E	F	Weight (kg)
FM26222122	FM.26 222 122	1/2	2 - 20	350	41	38	32	165.5	12.5	46	0.9
FM26222222	FM.26 222 222	1/2	5 - 46	350	41	38	32	165.5	12.5	46	0.9
FM26322122	FM.26 322 122	3/4	5 - 55	350	58	46	43	190	15	58	1.75
FM26322222	FM.26 322 222	3/4	10 - 110	350	58	46	43	190	15	58	1.75
FM26122122	FM.26 122 122	1/4	0.2 - 2.0	350	32	29	19	123	7	32	0.4
FM26122222	FM.26 122 222	1/4	0.5 - 4.5	350	32	29	19	123	7	32	0.4
FM26122322	FM.26 122 322	1/4	1 - 9	350	32	29	19	123	7	32	0.4
FM26422122	FM.26 422 122	1 1/4	20 - 180	210	For intallation details for 1 1/4 flowmeters see next page						8.0
FM26422222	FM.26 422 222	1 1/4	30 - 270	210							8.0
FM26422322	FM.26 422 322	1 1/4	40 - 360	210							8.0

Note 1: Part numbers featured with bold highlighted codes will ensure a 'standard' product selection.
Note 2: Alternate displayed part number selection will require you to contact Parker Filtration for availability.

Parker Hannifin
Hydraulic Filter Division Europe
FDHB500UK/Flow

Tel: +45 63 12 83 00 | Email: ps@hymatik.com | www.hymatik.com | Hvidkaervej 27a, DK-5250 Odense SV, Denmark

Flowline - Oil and Water Calibrated Flowmeters (Stainless Steel)

Flowmeters

Features & Benefits



- For flow measurement of corrosive or chemical media or in harsh locations.
- Manufactured in stainless steel 316.
- Works in any plane.
- Pressure up to 350 bar (5000 psi).
- Flows up to 360 l/min.
- Accuracy ±5% FSD.
- Repeatability ±1% FSD.
- Direct reading.
- Oil or water calibrated.
- Optional reed switch upgrade.

1¼" BSP option (¼", ½" and ¾" on previous page)

Specification

Construction:
Stainless steel to BS 970 316S.

Maximum working pressure:
Up to 350 bar.

Minimum working pressure:
1 bar.

Temperature range:
–20°C to +105°C.

Calibration:
Oil Specific gravity 0.856 at 20°C.
Water Specific gravity 1.0 at 20°C.

Viscosity range:
10 to 200 cSt (oil).

Accuracy:
±5% FSD.

Repeatability:
±1% FSD.

Min. scale reading:
10% FSD.

Connections:
BSP parallel threads.

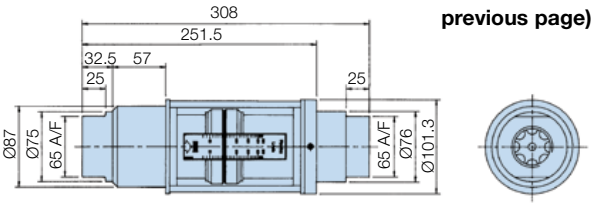

Wetted parts:
Body, thread adaptor

Piston, etc: cone locknut:
Stainless Steel.

Flow cone:
BS 970 316S 16.

Magnet encapsulation:
Stainless steel BS970/1:1991. :316S31.

Spring:
Stainless steel to BS 2056 EN 58J.

Seal:
Fluoroelastomer.

Note: To add an electrically operated reed switch to your flowmeter please order B26307

Ordering Information - Oil

Standard products table

Stainless steel flowmeter for oil		Ports BSP	Flow range (l/min)	Maximum pressure (bar)	Dimensions (mm)						Weight (kg)
Product number	Supersedes				A (A/F Hex)	B (A/F Hex)	C	D	E	F	
FM26232112	FM.26 232 112	½	2 - 20	350	41	38	32	165.5	12.5	46	0.9
FM26332112	FM.26 332 112	¾	5 - 55	350	58	46	43	190	15	58	1.75
FM26332212	FM.26 332 212	¾	10 - 110	350	58	46	43	190	15	58	1.75
FM26132112	FM.26 132 112	¼	0.2 - 2.0	350	32	29	19	123	7	32	0.4
FM26132212	FM.26 132 212	¼	0.5 - 4.5	350	32	29	19	123	7	32	0.4
FM26132312	FM.26 132 312	¼	1 - 9	350	32	29	19	123	7	32	0.4
FM26232212	FM.26 232 212	½	5 - 46	350	41	38	32	165.5	12.5	46	0.9
FM26432112	FM.26 432 112	1¼	20 - 180	350	For intallation details for 1¼ flowmeters see above						8.0
FM26432212	FM.26 432 212	1¼	30 - 270	350							8.0
FM26432312	FM.26 432 312	1¼	40 - 360	350							8.0

Ordering Information - Water

Standard products table

Stainless steel flowmeter for water		Ports BSP	Flow range (l/min)	Maximum pressure (bar)	Dimensions (mm)						
Product number	Supersedes				A (A/F Hex)	B (A/F Hex)		D		F	
FM26132122	FM.26 132 122	¼	0.2 - 2.0	350	32	29	19	123	7	32	0.4
FM26132222	FM.26 132 222	¼	0.5 - 4.5	350	32	29	19	123	7	32	0.4
FM26132322	FM.26 132 322	¼	1 - 9	350	32	29	19	123	7	32	0.4
FM26232122	FM.26 232 122	½	2 - 20	350	41	38	32	165.5	12.5	46	0.9
FM26232222	FM.26 232 222	½	5 - 46	350	41	38	32	165.5	12.5	46	0.9
FM26332122	FM.26 332 122	¾	5 - 55	350	58	46	43	190	15	58	1.75
FM26332222	FM.26 332 222	¾	10 - 110	350	58	46	43	190	15	58	1.75
FM26432122	FM.26 432 122	1¼	20 - 180	350	For intallation details for 1¼ flowmeters see above						8.0
FM26432222	FM.26 432 222	1¼	30 - 270	350							8.0
FM26432322	FM.26 432 322	1¼	40 - 360	350							8.0

Note 1: Part numbers featured with bold highlighted codes will ensure a 'standard' product selection.
Note 2: Alternate displayed part number selection will require you to contact Parker Filtration for availability.

Parker Hannifin
Hydraulic Filter Division Europe
FDHB500UK/Flow

Tel: +45 63 12 83 00 | Email: ps@hymatik.com | www.hymatik.com | Hvidkaervej 27a, DK-5250 Odense SV, Denmark

Flowline - Flowswitches

Flowmeters

Features & Benefits



- 'Boxed' two-switch type.
- Intrinsically safe versions (supplied complete with flowmeter).
- Maximum/minimum switching models.
- Maximum working pressure 350 bar. (min 1 bar)
- Flows from 2.0 to 110 l/min.
- Stainless steel – suitable for corrosive fluids.
- Stainless steel to BS970 316516.

Ordering Information

To order the required switching unit, simply add the appropriate prefix before the part numbers shown below.

Standard products table

Product number	Supersedes	Description	Switch Range (Typical)
FS643222112	FS.643 222 112	2 switches, 2 - 20 l/min (1/2 BSP) Oil	2 -12 l/min and 10-20 l/min
FS643222212	FS.643 222 212	2 switches, 5 - 46 l/min (1/2 BSP) Oil	6-24 l/m and 20-46 l/m
FS643322112	FS.643 322 112	2 switches, 5 - 55 l/min (3/4 BSP) Oil	5-30 l/min and 30-55 l/min
FS643322212	FS.643 322 212	2 switches, 10 - 110 l/min (3/4 BSP) Oil	10-50 l/min and 50-110 l/min

Product configurator

Brass flowswitch for oil or water						
Product number		Flow range and (port size)		Fluid type		Switch Range (Typical)
FS643	2 switches	**2221**	2 - 20 l/min (1/2 BSP)	**12**	Oil	2 -12 l/min and 10-20 l/min
FS67A	Intrinsically safe high switch	**2222**	5 - 46 l/min (1/2 BSP)	22	Water	20-24 l/m
FS67B	Intrinsically safe low switch	**3221**	5 - 55 l/min (3/4 BSP)			5-30 l/min
FS67C	Intrinsically safe hi/low switch	**3222**	10 - 110 l/min (3/4 BSP)			10-50 l/min and 50-110 l/min

Product configurator

Stainless steel flowswitch for oil or water						
Product number		Flow range and (port size)		Fluid type		Switch Range (Typical)
FS643	2 switches	**2321**	2 - 20 l/min (1/2 BSP)	**12**	Oil	2 -12 l/min and 10-20 l/min
FS67A	Intrinsically safe high switch	**2322**	5 - 46 l/min (1/2 BSP)	**22**	Water	24-46 l/m
FS67B	Intrinsically safe low switch	**3321**	5 - 55 l/min (3/4 BSP)			5-30 l/min
FS67C	Intrinsically safe hi/low switch	**3322**	10 - 110 l/min (3/4 BSP)			10-50 l/min and 50-110 l/min

Ordering example

Product number	Supersedes
FS643332212	**FS.643 332 212**

Note 1: Part numbers featured with bold highlighted codes will ensure a 'standard' product selection.
Note 2: Alternate displayed part number selection will require you to contact Parker Filtration for availability.

Tel: +45 63 12 83 00 | Email: ps@hymatik.com | www.hymatik.com | Hvidkaervej 27a, DK-5250 Odense SV, Denmark

Hydraulic Test Equipment

Flowmeters

Features & Benefits



- Speedy diagnosis of hydraulic circuit faults.
- Flows ranging from 2 to 360 l/min.
- Measuring flow, pressure and temperature.
- Fully Portable – No power source required.
- Hydrotrac unit for flows from 2 to 110 l/min available.
- Designed for oil applications only.

Specification

Flow range:
2 to 360 l/min.

Pressure range:
1 to 350 bar.

Temperature range:
0°C to +90°C.

Installation Details

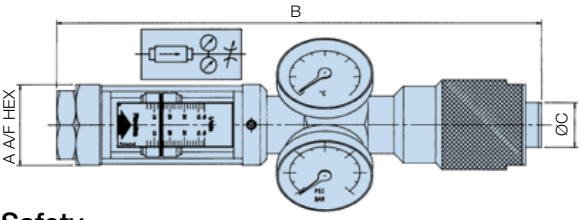

Safety

An axial flow restrictor valve is fitted which can be adjusted under full load from open to fully closed[1], and to complete the specification, a safety blow-out disc, set to fail at 455 bar is fitted to the manifold in a position facing away from the operator when reading the gauges normally. Two spare blow-out discs are supplied which are easily replaced by removing the hexagonal plug on the gauge manifold.

Additional blow out discs can be ordered - 41203B (Bag of 10)

Ordering Information

Standard products table

Product number	Flow range (l/min)	Weight Kg (with case)	Dimensions (mm)		
			A	B	C
4121	10 - 110	7.4	46	350	35
4120	5 - 55	7.4	46	350	35
4123	2 - 110	11.8	46	350	35
4168	20 - 180	13.85	75	496	87
4169	30 - 270	13.85	75	496	87
4170	40 - 360	13.85	75	496	87
Part number	**Supersedes**	**Description**			
41203B	4120.3.B	Safety blow out discs x 10			

Note 1: Part numbers featured with bold highlighted codes will ensure a 'standard' product selection.
Note 2: Alternate displayed part number selection will require you to contact Parker Filtration for availability.
Note 3: 4123 'Hydrotrac' unit features 2 flowmeters (2 - 20 and 10 - 110 l/min) and 1 pressure gauge and 1 thermometer.

Troubleshooting Test Units

Hydraulic Test Units are designed specifically for the speedy diagnosis of hydraulic circuit faults in mobile, marine and industrial systems using the normal range of mineral oils. Their rugged construction based mainly on mild steel, manganese bronze and acrylic materials makes them ideally suited for arduous use in the field.

Each unit is supplied in a convenient carrying case providing full protection and additional storage space for fittings. Because they need no power source such as batteries etc, they are always ready for instant use.

6 models are available to cover flow capacities up to 360 l/min and each incorporates a direct reading, uni-directional flow meter. The meter, which is both self cleaning and reasonably tolerant of contaminated fluids is coupled to a manifold that houses a glycerine-filled pressure gauge calibrated 0 to 350 bar and a dial-type thermometer with a 0°C to 100°C range.

Unit can only operate up to 90°C.

For further convenience the scale on the flow meter can be rotated to ensure visibility in any situation and the installed attitude of the assembly is not critical, though whenever possible the unit should be mounted with pressure gauge vertical and gauge case relief valve uppermost. The unit is designed for flow to be in the direction of the arrow on the flowmeter scale and must not be installed with the flow reversed.

[1] Note: Permissable allowed see page <50ml/min at 350 bar (5076 psi)

Flow Products - For Compressed Air Applications

Flowmeters & Monitors

Features & Benefits



Ⓐ Flowline Flowswitches and Flowmeters

- Calibrated for direct reading of compressed air at 7 bar.
- Works in any plane.
- Brass or stainless steel models available in 4 sizes.
- Calibrated at 7 bar and 20°C.
- Flow ranges from 2 to 600 SCFM.
- Pressure 1-41 bar max.
- Optional reed switch upgrade.

Ⓑ Loflow Air Flowmeters

- Flow measurement from 1.1 to 720 l/min. Max 10 bar rating.

Ⓒ Compressed Air Test Equipment

- 6 models available – 1/4", 3/4" and 1 1/4" BSP.
- Air flow range 2 to 600 SCFM.
- Pressure 1-41 bar max.

Specification

Full technical specifications for the Flowmeter, Flowswitch, LoFlow and test equipment products are provided in the respective pages for these products.

Ordering Information

Standard products table

Brass flowmeter for air			Flow range		
Product number	Supersedes	Ports BSP	SCFM	l/sec	Maximum working pressure (bar)
FM26123332	FM.26 123 332	1/4	2 - 20	1 - 10	41
FM26223132	FM.26 223 132	1/2	5 - 50	2 - 25	41
FM26223232	FM.26 223 232	1/2	10 - 110	5 - 50	41
FM26323132	FM.26 323 132	3/4	15 - 125	6 - 60	41
FM26323232	FM.26 323 232	3/4	20 - 225	10 - 100	41
FM26423132	FM.26 423 132	1 1/4	40 - 400	20 - 200	25
FM26423232	FM.26 423 232	1 1/4	60 - 600	30 - 300	25

Standard products table - LoFlow

Product number	Supersedes	Ports (BSPT male)	Flow range	Float material
LF801450	LF.3007E	1/4 - 3/4	1.1 - 8.0 l/min	Acetal
LF802455	LF.3050E	3/4 - 3/4	10 - 50 l/min	Acetal
LF802452	LF.3135E	3/4 - 3/4	20 - 135 l/min	Acetal
LF802454	LF.3720E	3/4 - 3/4	2 - 12 l/sec	S/Steel
LF801451	LF.3021E	1/4 - 3/4	4 - 22 l/min	S/Steel
LF802453	LF.3330E	3/4 - 3/4	1.0 - 5.5 l/sec	S/Steel

Standard products table

Stainless steel flowmeter for air			Flow range		
Product number	Supersedes	Ports BSP	SCFM	l/sec	Maximum working pressure (bar)
FM26133332	FM.26 133 332	1/4	2 - 20	1 - 10	41
FM26233132	FM.26 233 132	1/2	5 - 50	2 - 25	41
FM26233232	FM.26 233 232	1/2	10 - 110	5 - 50	41
FM26333132	FM.26 333 132	3/4	15 - 125	6 - 60	41
FM26333232	FM.26 333 232	3/4	20 - 225	10 - 100	41
FM26433132	FM.26 433 132	1 1/4	40 - 400	20 - 200	41
FM26433232	FM.26 433 232	1 1/4	60 - 600	30 - 300	41

Product configurator

Brass flowswitch for air		Flow range SCFM and (l/sec)		Ports (BSP)	Fluid type	
Product number						
FS643	2 switches	2231	5 - 50 (2 - 25)	1/2	32	Air
FS67A	Intrinsically safe high switch	2232	10 - 110 (5 - 50)	1/2		
FS67B	Intrinsically safe low switch	3231	15 - 125 (6 - 60)	3/4		
		3232	20 - 225 (10 - 100)	3/4		

Ordering example

Product number	Supersedes
FS643323232	FS.643 323 232

Note 1: Part numbers featured with bold highlighted codes will ensure a 'standard' product selection.
Note 2: Alternate displayed part number selection will require you to contact Parker Filtration for availability.
Note 3: To add an electrically operated reed switch to your flowmeter please order B.26307

Parker Hannifin
Hydraulic Filter Division Europe
FDHB500UK/Flow

Tel: +45 63 12 83 00 | Email: ps@hymatik.com | www.hymatik.com | Hvidkaervej 27a, DK-5250 Odense SV, Denmark

Guide to Contamination Control

Understanding and Answering the Threat of Contamination



Reduce downtime with effective contamination monitoring

Understanding and answering the threat of contamination

Understanding the significance that solid and liquid contamination can play in undermining the efficiency and effectiveness of hydraulic oils is a complex subject but one that has some basic components and solutions as to how to monitor, measure and ultimately remove any particulate from a system. Parker Filtration can offer many years of experience on this subject.

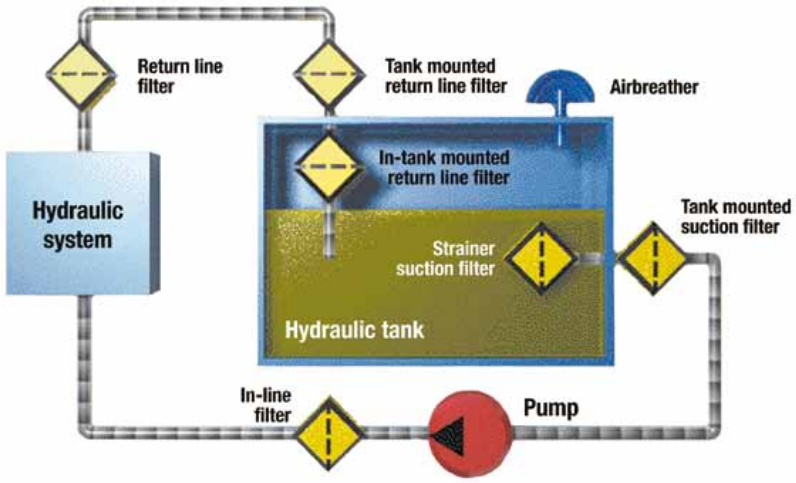

Contact Information:

Parker Hannifin
Hydraulic Filter Division Europe

European Product Information Centre
Freephone: 00800 27 27 5374
(from AT, BE, CH, CZ, DE, EE, ES, FI, FR, IE, IT, PT, SE, SK, UK)
filtrationinfo@parker.com

www.parker.com/hfde

Product Features:

- Examples and explanations of ISO contamination levels.
- Solid contamination codes charted.
- Condition monitoring equipment explained.
- Degree of filtration overview

Tel: +45 63 12 83 00 | Email: ps@hymatik.com | www.hymatik.com | Hvidkaervej 27a, DK-5250 Odense SV, Denmark

Guide to Contamination Control

Understanding and Answering the Threat of Contamination

The Threat of Contamination

Industry requirements with regard to hydraulic and oil lubrication systems emphasise reliability, long lifetime and reduced energy use. Depending on the circumstances, some 70 - 80% of system failures are due to contamination. Cleanliness monitoring is essential in contamination control, as is selecting the right filter components. The first step, however, is understanding the specific system requirements and local operating conditions.

This guide to contamination control describes:

- Types of failures
- Sources of contamination
- Fluid cleanliness level
- Condition monitoring equipment
- Cleanliness service
- Filtration: parameters and facts
- Filter selection and filter types

Types of Failures

Component failure is often an invisible process. In general three types of failure can be distinguished:

1. Catastrophic Failures

This failure occurs suddenly and without warning; it is of a permanent nature. It is often caused by larger sized particles entering a component and obstructing the relative movement between surfaces, resulting in seizure of the component.

2. Transient Failures

Generally speaking, this type of failure is short-lived and goes unnoticed, although the consequences rarely do. It is caused by particles that momentarily interfere with the function of a component. The particles lodge in a critical clearance between matching parts, only to be washed away during the next operation cycle. As a result, components become less predictable and thus unsafe.

3. Degradation Failures

Gradual deterioration in the performance of a component results in its eventual repair or replacement. This failure is caused by the effect of wear induced by contamination. Additional generated contamination can lead to a catastrophic failure. Failures or reduced system performance have a direct impact on the cost of ownership, the efficiency rate and the perceived quality perception of the end users.





Tel: +45 63 12 83 00 | Email: ps@hymatik.com | www.hymatik.com | Hvidkaervej 27a, DK-5250 Odense SV, Denmark

Sources of Contamination

Finding the balance

What does it take to implement system-matched filtration? A review of the sources of contamination is the first step in finding the balance between the performance of the filtration system and the system demands.

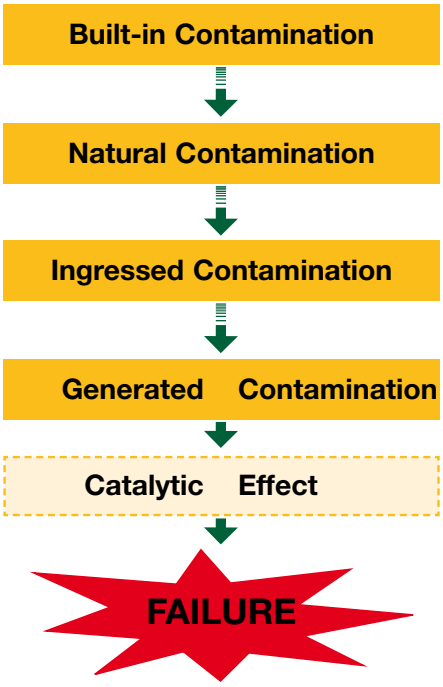

Sources of Contamination

Several sources of contamination must be taken into account when it comes to the effective implementation of system-matched filtration. Without adequate filtration, the protection of the system is jeopardised and component or system failure is imminent. System-matched filtration changes the deterioration into a balanced situation, representing the continuously controlled process that is needed to achieve system reliability. Realising this is only possible when the required fluid cleanliness levels are maintained.

1. Built-in Contamination

Residual contamination from the manufacturing and assembly processes cannot be avoided. Examples are machining debris, weld spatters, casting sand, paint, pipe sealant or fibres from cleaning rags. Flushing system components prior to assembly and decent housekeeping during the various stages of the assembly process are a must to reduce the amount of built-in contamination.



Filter media pleating

2. Natural Contamination

In general, the cleanliness level of new oil does not always meet the requirements of the system. Despite the efforts to control the fluid cleanliness level during the production processes, transport and distribution may contaminate the oil. Depending on the requirements for system cleanliness, we advise that you filter new oil before usage.

3. Ingressed Contamination

Systems are always under attack from contamination. Unfortunately it is not possible to avoid ingressed contamination. Air breathers, cylinder rod seals, wiper seals, component seals or poorly fitted covers are a few examples of system parts that may have an important influence on the amount of ingressed contamination.

4. Generated Contamination

Particles generate particles. This phenomenon is known as abrasion. Other processes like cavitation, corrosion, erosion, fatigue and metallic contact between moving parts generates particles and thus influences the contamination that is already present in the system. Even though these processes cannot always be avoided, their impact is strongly influenced by effective filtration.

5. Catalytic Effect

During the filter selection process, attention is generally given to the removal of solid, hard-type contamination only. The performance of hydraulic and lubrication fluids is influenced by the catalytic effect. As a result of the catalytic effect, the lifetime of the oil is significantly reduced.

Tel: +45 63 12 83 00 | Email: ps@hymatik.com | www.hymatik.com | Hvidkaervej 27a, DK-5250 Odense SV, Denmark

Guide to Contamination Control

Understanding and Answering the Threat of Contamination

Lifetime of Oil

Selecting the Right Oil

Oils are selected based on their unique performance with regard to:

a. Energy transfer
b. Corrosion protection
c. Cooling (transfer of heat)
d. Lubrication

The lifetime of oils is influenced by the amount of oxygen, oil temperature, water content and presence of catalyser type elements. The allowed water content varies for each type of oil. Due to, for example, seal leakage or condensation, the water content can easily reach concentrations far above the allowed water content value. The combination of water and wear elements like iron or copper causes a catalytic effect and as a result, reduces the lifetime of the oil. The lifetime of oil is also influenced by the amount of generated static electrics.

Lifetime Reduction

The lifetime reduction of oil is expressed by the degradation factor. The influence of the catalytic effect of the degradation factor is shown below.

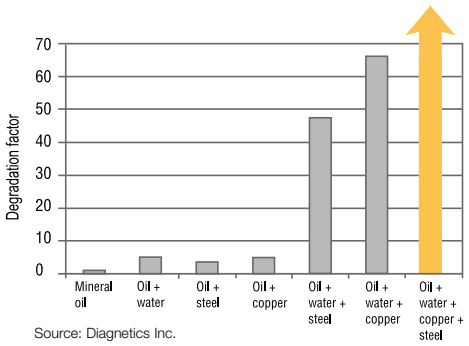

Source: Diagnetics Inc.

Oil degradation can reduce the protection against corrosion and lubrication performance.

Regular oil analysis is important to monitor the condition of the hydraulic or lubrication fluid. This analysis is also used to obtain information related to the process of selecting system-matched filter components.

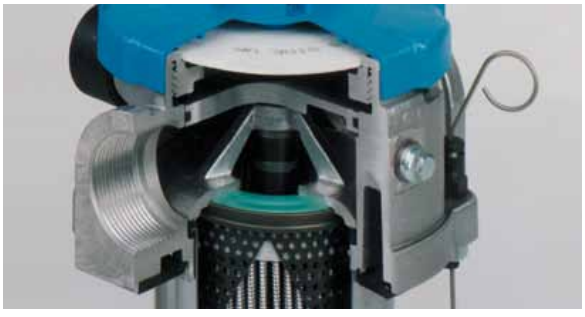

Tanktopper II return line filter with integrated air breather and patented *LEIF*® element

The Balance between System Requirements and Filtration System Performance

Parker's philosophy exceeds the traditional approach of protecting the system by means of filtration.

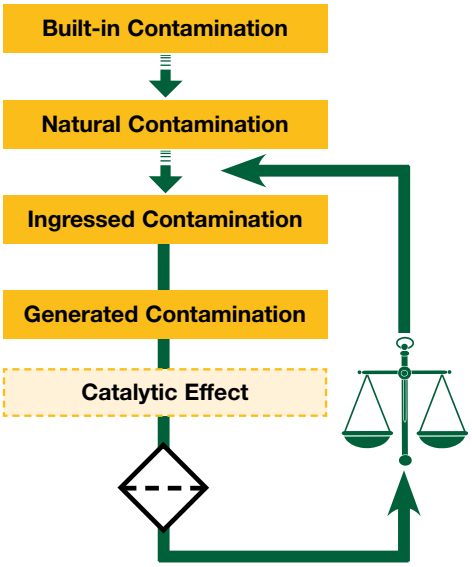

System-matched filtration is not limited to a filter alone. The process of system-matched filtration is based on the correct implementation of suitable filtration products, taking into account the requirements from the hydraulic or lubrication fluids, system components and customer expectations.

Contamination Control

Achieving the required system protection implicates a correct understanding of the system. Today filters are selected based on several parameters like ß-values, pressure drop and dirt holding capacity.

Filtration is built-in safety, meant to achieve and maintain the required fluid cleanliness level during a defined period. This implicates a more detailed approach, which can only be realised when several filtration parameters are considered.

Before Filtration



After Filtration

Contamination & Cleanliness Level

Sizes of Contamination

Filters are selected to capture contamination from hydraulic and lubrication fluids.

Contamination is an invisible enemy. The human eye cannot see particles smaller than 40 micron. For the correct understanding a comparison is given below.

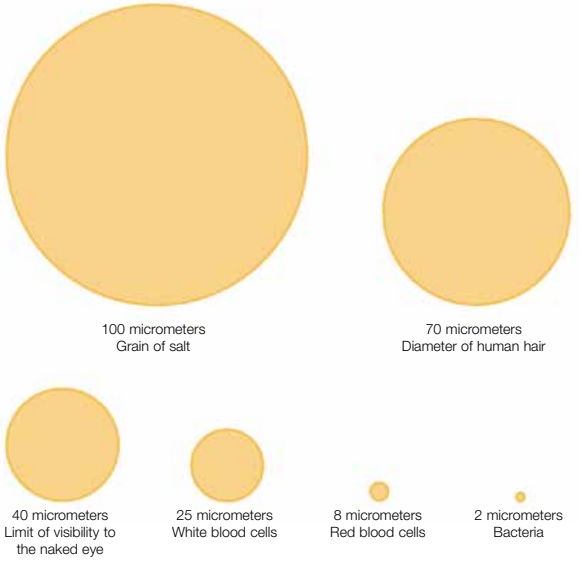

Component	Microns
Anti-friction bearings	0.5
Vane pump (vane tip to other ring)	0.5 - 1
Gear pump (gear to side plate)	0.5 - 5
Servo valves (spool to sleeve)	1 - 4
Hydrostatic bearings	1 - 25
Piston pump (piston to bore)	5 - 40
Servo valves flapper wall	18 - 63
Actuators	50 - 250
Servo valve orifice	130 - 450

Typical hydraulic component clearances are given as an indication only

Fluid Cleanliness Level

The ISO 4406:1999 standard is an important code to define the fluid cleanliness level using a solid contamination code.

This ISO code is determined by allocating a first scale number to the total number of particles larger than 4µm, allocating a second scale number to all particles larger than 6µm and allocating a third scale number to the total number of particles larger than 14µm.

In the recent past, the fluid cleanliness level code was determined using the ISO 4406:1987 standard. Instead of counting particles sizes 4, 6 and 14µm, the fluid cleanliness level was determined by counting particles larger than 5 and 15µm. The particle size 2µm was added later.

As a result of upgrading the ISO standards, new particle sizes have been defined. In general, the fluid cleanliness code will not change as a result of this new standard. Built-up historic data remains directly comparable to new data.

ISO 4406:1999 cleanliness classes

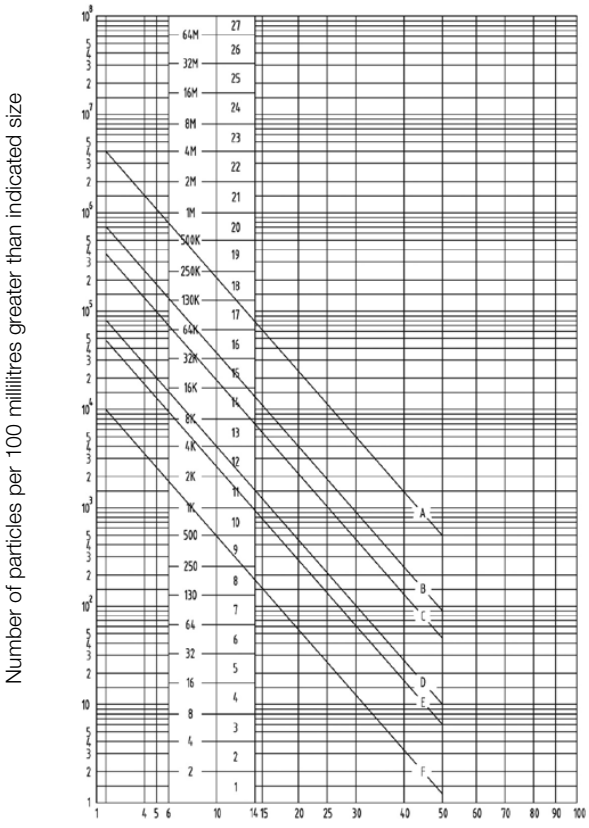

Tel: +45 63 12 83 00 | Email: ps@hymatik.com | www.hymatik.com | Hvidkaervej 27a, DK-5250 Odense SV, Denmark

Guide to Contamination Control

Understanding and Answering the Threat of Contamination

Cleanliness Level

Examples of cleanliness level are given in the ISO graph. These lines represent:

A. Low-pressure systems (code 21/20/17)
B. Low-pressure control systems (code 19/18/14)
C. Sophisticated pumps/motors control valves (code 18/17/13)
D. Highly sophisticated systems and hydrostatic transmissions (code 16/15/11)
E. Sensitive servo systems (code 15/14/10)
F. High performance sensitive systems (code 12/11/8)

We recommend verifying the required cleanliness level based on the components used for the system. Manufacturers of system components often provide information related to the required fluid cleanliness level for their products.

Condition Monitoring Equipment

Over the years, fluid condition monitoring has become increasingly important. By offering system-matched filtration solutions, the stringent customer demands related to extended component lifetime or improved system reliability can be met. Parker has developed a complete range of instruments and components for maintenance programmes and local fluid condition analysis such as the LaserCM below.



icountLaserCM

Parker's particle counters are well known for their accurate performance in the field or in a production line environment. Lightweight portable particle counters can be used for temporary fluid cleanliness measurements.

The MCM20, designed for permanent installation, is meant for continuous fluid monitoring. The compact MS100 and MS150 moisture sensor means a complete solution is available to measure the water content in hydraulic or lubrication fluids.

Solid Contaminant Codes

In addition to ISO 4406: 1999, other standards are used to express the fluid cleanliness level. A comparison between the codes is given below.

ISO 4406: 1999	ISO 4406: 1987	NAS 1638 CLASS
13/11/8	11/8	2
14/12/9	12/9	3
15/13/10	13/10	4
16/14/9	14/9	-
16/15/11	14/10	5
17/15/9	15/9	-
17/15/10	15/10	-
17/15/12	15/12	6
18/16/10	16/10	-
18/16/11	16/11	-
18/16/13	16/13	7
19/17/12	17/12	-
19/17/14	17/14	8
20/18/12	18/12	-
20/18/13	18/13	-
20/18/15	18/15	9
21/19/13	19/13	-
21/19/16	19/16	10
22/20/13	20/13	-
22/20/17	20/17	11

Note:
ISO 4406: 1987 is based on particle sizes larger than 5 and 15µm
ISO 4406: 1999 is based on particles sizes larger than 4, 6 and 14µm

Several Cleanliness Levels

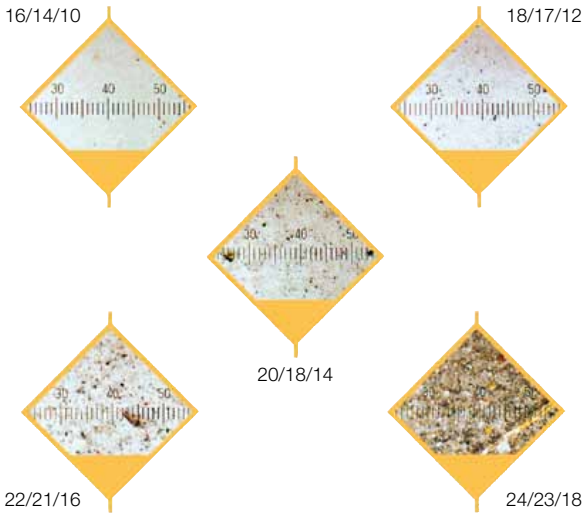

Tel: +45 63 12 83 00 | Email: ps@hymatik.com | www.hymatik.com | Hvidkaervej 27a, DK-5250 Odense SV, Denmark

Cleanliness Service

Cleanliness Service to Prevent Failures

As Parker has no financial interest in the oil industry, the company can operate as an independent laboratory. The development laboratory at Parker Filtration BV in Arnhem - the only laboratory of its kind in Belgium, the Netherlands and Luxembourg - has at its disposal all the facilities for its extensive R & D department. In addition, the services are offered on a commercial basis to third parties.

Equipment

The laboratory uses state-of-the-art test equipment. The company has invested in the latest Karl Fischer coulometric equipment, that prevents tests from being influenced by, among other things, additives in the oil. The particle-counting equipment is calibrated according to the recent ISO 11171 standard. It is now possible to indicate the measured cleanliness according to ISO 4406:1999.

Standard Test

The high-quality standard test, carried out in Parker's laboratory, consists of a water analysis and a cleanliness calculation according to ISO 4406, the new ISO 4406:1999 and the NAS 1638 standard, as part of which particles from 2 to 100µm are measured and reported. Membrane research and digital photography of the membrane are also part of the standard test. The results of each test are described in a report that contains clear conclusions. It is also possible to conduct a spectral analysis.

In Practice

How do the laboratory services work? Only three days after receipt of the oil sample, the standard analysis is completed. The results of a spectral analysis are known after seven days. The reports can be sent directly and completely by e-mail. A free sample bottle is available upon request.

Filtration: Parameters and Facts

Generally speaking, fibre-type materials like cellulose and glass fibre are applied for hydraulic and lubrication fluid filtration. Filters are selected based on the following parameters:

- Required protection of system components
- Location of filter(s) in the system
- Flow rate and allowed pressure loss
- Desired filter element life time
- Hydraulic or lubrication fluid type

The dirt holding capacity is the amount of solid contamination a filter can hold before the filter material is plugged. This value is measured in accordance to ISO 16889 using ISO MTD test dust. The filter element lifetime strongly depends on the contamination conditions that are present in the system and its environment.

Predicting the filter element lifetime in the system is complicated, because of the variety in contamination (e.g. metal, sand and fibres, each with a certain distribution of particle sizes) in relation to the specified dirt holding capacity.

Degree of Filtration

Parker's filtration philosophy is based on the optimum distribution of several particle sizes by using the complete thickness of glass fibre layers.

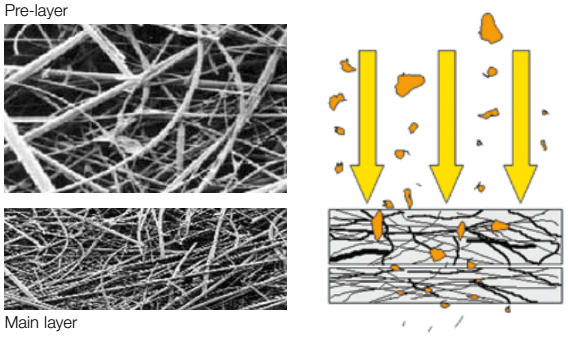

Each selected filter layer has a unique performance for the removal of solid contamination. System-matched filtration implicates the removal of harmful particles. For some systems an improved removal efficiency for smaller sized particles is more important compared to other systems using components. The combination of pre- and main layers results in an achievable fluid cleanliness level. The complete package of filter and support layers is indicated as pleat pack.

Guide to Contamination Control

Understanding and Answering the Threat of Contamination

Degree of Filtration

The ß-value is used to express the removal efficiency for a defined particle size.



ßx(c) = N particles upstream > x µm / N particles downstream > x µm

The ISO 4572 standard formerly required only the ßx>75 value. That standard has now been upgraded and replaced by ISO 16889, reporting the ß-value of 2, 10, 75, 100, 200 and 1000 for each filter medium or pleat pack. The corresponding efficiencies are given below.

ß-value	2	10	75	100	200	1000
Efficiency	50,00%	90,00%	98,67%	99,00%	99,50%	99,99%

Taking into account a ß75(c)>10 element, the removal efficiency is 98.67% of particles larger than 10 micron.

Too often filter elements are compared by looking at one ß-value only. The focus on high ß-values is misleading and does not always provide the required information.

Filter Comparison ß-value	Filter element I	 element II
Beta-value	ß-75(c)>10	ß-200(c)>10
Number of particles at upstream of filter >10 micron	5,000,000	5,000,000
Removal efficiency	98,67%	99,50%
Number of particles at downstream of filter >10 micron	66,500	25,000

Statements that a ß200 filter improves the fluid cleanliness level by a factor 2.6 (66,500/25,000) are misleading. Fluid cleanliness codes are based on several particle sizes. More information is needed to determine the overall removal performance of filter media.

A comparison between two 10-micron filter medias.

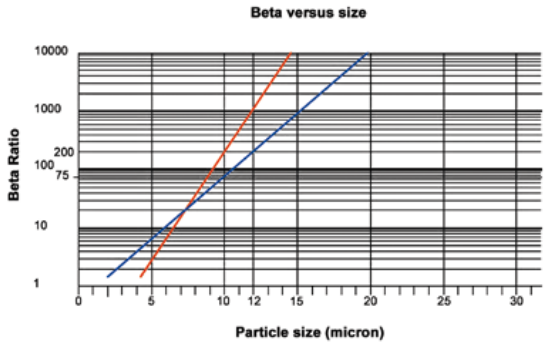

Filter element (blue) I: ß10(c)>75, Filter element (red) II: ß10(c)>200

Filter element II has a lower removal efficiency for smaller sized particles. Smaller sized particles can easily flow in narrow tolerances areas. Smaller sized particles will accelerate the amount of generated contamination, effecting the functionality of other system components and accelerating oil degradation.

The overall removal efficiency of the element forms the core of fluid cleanliness levels

The correct degree of filtration is chosen based on the required fluid cleanliness level, not based on one ß-value.

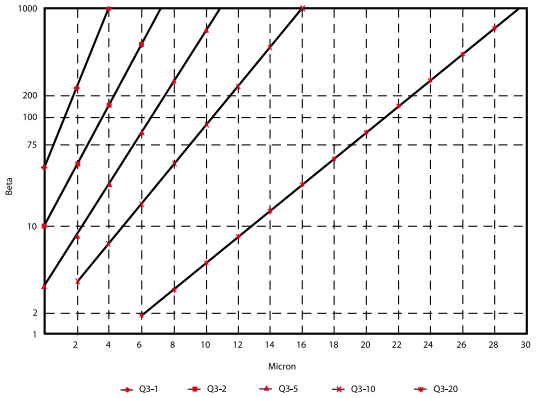

An indication of recommended fluid cleanliness levels is given in this table. It is common use in the industry that manufacturers of components prescribe required fluid cleanliness level for the reliable functioning of their products.

Components	ISO Code
Servo control valves	16/14/11
Proportional valves	17/15/12
Valve & piston pumps/motors	18/16/13
Directional & pressure control valves	18/16/13
Gear pumps/motors	19/17/14
Flow control valves	20/18/15
Cylinders	20/18/15

The ISO codes are indicative values only.



Filter media composition

Tel: +45 63 12 83 00 | Email: ps@hymatik.com | www.hymatik.com | Hvidkaervej 27a, DK-5250 Odense SV, Denmark

Flow Rate & Pressure Lost

Flow Rate and Allowable Pressure Lost

Each filter element is designed to handle a nominal flow rate. The allowed flow rate depends on fluid viscosity, degree of filtration, and the amount of pressure that is lost. Indirectly, the required element lifetime is an important parameter. A larger sized element with a more effective filter element area has a positive influence on the element lifetime.

Media	Degree of filtration	Upper range	Lower range
Q3 2	16/14/10	13/11/8	
Q3 5	18/16/13	17/15/9	
Q310	20/18/15	19/17/12	
Q320	22/20/17	21/19/13	

The given cleanliness levels are indicative values only, based on average values

Filter elements are chosen based on their initial clean element pressure drop. It is preferred to apply a ratio of at least three between element bypass settings and element initial pressure drops.

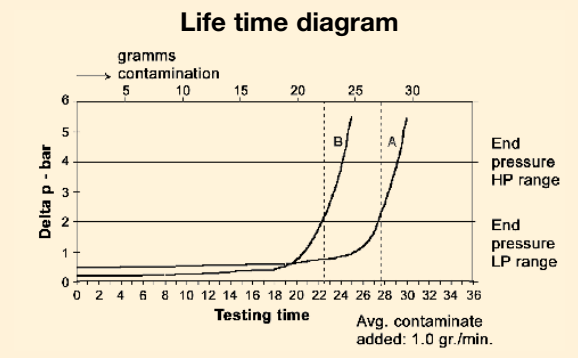

Comparing filter elements with different filter media based on the initial clean element pressure drop does not give a reliable indication of the element dirt holding capacity. In this example the filter media A has a higher initial pressure drop. However, during its lifetime the pressure lost is more constant compared to media B. This results in a longer element lifetime. The difference in performance is caused by a more effective distribution of captured particles in media A.

Filter Types and Locations

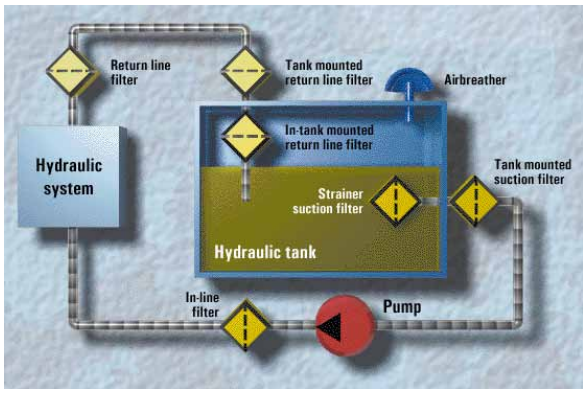

Depending on the filter type and corresponding location, a general pressure lost recommendation can be given

Suction Line: 0.03-0.05 bar

Pressure Line: 1 bar

Return Line: 0.3-0.5 bar

Suction Return Filter: 1 bar

Tel: +45 63 12 83 00 | Email: ps@hymatik.com | www.hymatik.com | Hvidkaervej 27a, DK-5250 Odense SV, Denmark

Parker's Motion & Control Technologies

At Parker, we're guided by a relentless drive to help our customers become more productive and achieve higher levels of profitability by engineering the best systems for their requirements. It means looking at customer applications from many angles to find new ways to create value. Whatever the motion and control technology need, Parker has the experience, breadth of product and global reach to consistently deliver. No company knows more about motion and control technology than Parker. For further info call 00800 27 27 5374



Aerospace

Key Markets

Aftermarket services
Commercial transports
Engines
General & business aviation
Helicopters
Launch vehicles
Military aircraft
Missiles
Power generation
Regional transports
Unmanned aerial vehicles

Key Products

Control systems & actuation products
Engine systems & components
Fluid conveyance systems & components
Fluid metering, delivery & atomization devices
Fuel systems & components
Fuel tank inerting systems
Hydraulic systems & components
Thermal management
Wheels & brakes



Climate Control

Key Markets

Agriculture
Air conditioning
Construction Machinery
Food & beverage
Industrial machinery
Life sciences
Oil & gas
Precision cooling
Process
Refrigeration
Transportation

Key Products

Accumulators
Advanced actuators
CO_2 controls
Electronic controllers
Filter driers
Hand shut-off valves
Heat exchangers
Hose & fittings
Pressure regulating valves
Refrigerant distributors
Safety relief valves
Smart pumps
Solenoid valves
Thermostatic expansion valves



Electromechanical

Key Markets

Aerospace
Factory automation
Life science & medical
Machine tools
Packaging machinery
Paper machinery
Plastics machinery & converting
Primary metals
Semiconductor & electronics
Textile
Wire & cable

Key Products

AC/DC drives & systems
Electric actuators, gantry robots & slides
Electrohydrostatic actuation systems
Electromechanical actuation systems
Human machine interface
Linear motors
Stepper motors, servo motors, drives & controls
Structural extrusions



Filtration

Key Markets

Aerospace
Food & beverage
Industrial plant & equipment
Life sciences
Marine
Mobile equipment
Oil & gas
Power generation & renewable energy
Process
Transportation
Water Purification

Key Products

Analytical gas generators
Compressed air filters & dryers
Engine air, coolant, fuel & oil filtration systems
Fluid condition monitoring systems
Hydraulic & lubrication filters
Hydrogen, nitrogen & zero air generators
Instrumentation filters
Membrane & fiber filters
Microfiltration
Sterile air filtration
Water desalination & purification filters & systems



Fluid & Gas Handling

Key Markets

Aerial lift
Agriculture
Bulk chemical handling
Construction machinery
Food & beverage
Fuel & gas delivery
Industrial machinery
Life sciences
Marine
Mining
Mobile
Oil & gas
Renewable energy
Transportation

Key Products

Check valves
Connectors for low pressure fluid conveyance
Deep sea umbilicals
Diagnostic equipment
Hose couplings
Industrial hose
Mooring systems & power cables
PTFE hose & tubing
Quick couplings
Rubber & thermoplastic hose
Tube fittings & adapters
Tubing & plastic fittings



Hydraulics

Key Markets

Aerial lift
Agriculture
Alternative energy
Construction machinery
Forestry
Industrial machinery
Machine tools
Marine
Material handling
Mining
Oil & gas
Power generation
Refuse vehicles
Renewable energy
Truck hydraulics
Turf equipment

Key Products

Accumulators
Cartridge valves
Electrohydraulic actuators
Human machine interfaces
Hybrid drives
Hydraulic cylinders
Hydraulic motors & pumps
Hydraulic systems
Hydraulic valves & controls
Hydrostatic steering
Integrated hydraulic circuits
Power take-offs
Power units
Rotary actuators
Sensors



Pneumatics

Key Markets

Aerospace
Conveyor & material handling
Factory automation
Life science & medical
Machine tools
Packaging machinery
Transportation & automotive

Key Products

Air preparation
Brass fittings & valves
Manifolds
Pneumatic accessories
Pneumatic actuators & grippers
Pneumatic valves & controls
Quick disconnects
Rotary actuators
Rubber & thermoplastic hose & couplings
Structural extrusions
Thermoplastic tubing & fittings
Vacuum generators, cups & sensors



Process Control

Key Markets

Alternative fuels
Biopharmaceuticals
Chemical & refining
Food & beverage
Marine & shipbuilding
Medical & dental
Microelectronics
Nuclear Power
Offshore oil exploration
Oil & gas
Pharmaceuticals
Power generation
Pulp & paper
Steel
Water/wastewater

Key Products

Analytical Instruments
Analytical sample conditioning products & systems
Chemical injection fittings & valves
Fluoropolymer chemical delivery fittings, valves & pumps
High purity gas delivery fittings, valves, regulators & digital flow controllers
Industrial mass flow meters/controllers
Permanent no-weld tube fittings
Precision industrial regulators & flow controllers
Process control double block & bleeds
Process control fittings, valves, regulators & manifold valves



Sealing & Shielding

Key Markets

Aerospace
Chemical processing
Consumer
Fluid power
General industrial
Information technology
Life sciences
Microelectronics
Military
Oil & gas
Power generation
Renewable energy
Telecommunications
Transportation

Key Products

Dynamic seals
Elastomeric o-rings
Electro-medical instrument design & assembly
EMI shielding
Extruded & precision-cut, fabricated elastomeric seals
High temperature metal seals
Homogeneous & inserted elastomeric shapes
Medical device fabrication & assembly
Metal & plastic retained composite seals
Shielded optical windows
Silicone tubing & extrusions
Thermal management
Vibration dampening

ENGINEERING YOUR SUCCESS.

Parker Worldwide

Europe, Middle East, Africa

AE – United Arab Emirates, Dubai
Tel: +971 4 8127100
parker.me@parker.com

AT – Austria, Wiener Neustadt
Tel: +43 (0)2622 23501-0
parker.austria@parker.com

AT – Eastern Europe, Wiener Neustadt
Tel: +43 (0)2622 23501 900
parker.easteurope@parker.com

AZ – Azerbaijan, Baku
Tel: +994 50 2233 458
parker.azerbaijan@parker.com

BE/LU – Belgium, Nivelles
Tel: +32 (0)67 280 900
parker.belgium@parker.com

BG – Bulgaria, Sofia
Tel: +359 2 980 1344
parker.bulgaria@parker.com

BY – Belarus, Minsk
Tel: +375 17 209 9399
parker.belarus@parker.com

CH – Switzerland, Etoy
Tel: +41 (0)21 821 87 00
parker.switzerland@parker.com

CZ – Czech Republic, Klecany
Tel: +420 284 083 111
parker.czechrepublic@parker.com

DE – Germany, Kaarst
Tel: +49 (0)2131 4016 0
parker.germany@parker.com

DK – Denmark, Ballerup
Tel: +45 43 56 04 00
parker.denmark@parker.com

ES – Spain, Madrid
Tel: +34 902 330 001
parker.spain@parker.com

FI – Finland, Vantaa
Tel: +358 (0)20 753 2500
parker.finland@parker.com

FR – France, Contamine s/Arve
Tel: +33 (0)4 50 25 80 25
parker.france@parker.com

GR – Greece, Athens
Tel: +30 210 933 6450
parker.greece@parker.com

HU – Hungary, Budaörs
Tel: +36 23 885 470
parker.hungary@parker.com

IE – Ireland, Dublin
Tel: +353 (0)1 466 6370
parker.ireland@parker.com

IT – Italy, Corsico (MI)
Tel: +39 02 45 19 21
parker.italy@parker.com

KZ – Kazakhstan, Almaty
Tel: +7 7273 561 000
parker.easteurope@parker.com

NL – The Netherlands, Oldenzaal
Tel: +31 (0)541 585 000
parker.nl@parker.com

NO – Norway, Asker
Tel: +47 66 75 34 00
parker.norway@parker.com

PL – Poland, Warsaw
Tel: +48 (0)22 573 24 00
parker.poland@parker.com

PT – Portugal, Leca da Palmeira
Tel: +351 22 999 7360
parker.portugal@parker.com

RO – Romania, Bucharest
Tel: +40 21 252 1382
parker.romania@parker.com

RU – Russia, Moscow
Tel: +7 495 645-2156
parker.russia@parker.com

SE – Sweden, Spånga
Tel: +46 (0)8 59 79 50 00
parker.sweden@parker.com

SK – Slovakia, Banská Bystrica
Tel: +421 484 162 252
parker.slovakia@parker.com

SL – Slovenia, Novo Mesto
Tel: +386 7 337 6650
parker.slovenia@parker.com

TR – Turkey, Istanbul
Tel: +90 216 4997081
parker.turkey@parker.com

UA – Ukraine, Kiev
Tel +380 44 494 2731
parker.ukraine@parker.com

UK – United Kingdom, Warwick
Tel: +44 (0)1926 317 878
parker.uk@parker.com

ZA – South Africa, Kempton Park
Tel: +27 (0)11 961 0700
parker.southafrica@parker.com

North America

CA – Canada, Milton, Ontario
Tel: +1 905 693 3000

US – USA, Cleveland
Tel: +1 216 896 3000

Asia Pacific

AU – Australia, Castle Hill
Tel: +61 (0)2-9634 7777

CN – China, Shanghai
Tel: +86 21 2899 5000

HK – Hong Kong
Tel: +852 2428 8008

IN – India, Mumbai
Tel: +91 22 6513 7081-85

JP – Japan, Tokyo
Tel: +81 (0)3 6408 3901

KR – South Korea, Seoul
Tel: +82 2 559 0400

MY – Malaysia, Shah Alam
Tel: +60 3 7849 0800

NZ – New Zealand, Mt Wellington
Tel: +64 9 574 1744

SG – Singapore
Tel: +65 6887 6300

TH – Thailand, Bangkok
Tel: +662 186 7000-99

TW – Taiwan, Taipei
Tel: +886 2 2298 8987

South America

AR – Argentina, Buenos Aires
Tel: +54 3327 44 4129

BR – Brazil, Sao Jose dos Campos
Tel: +55 800 727 5374

CL – Chile, Santiago
Tel: +56 2 623 1216

MX – Mexico, Apodaca
Tel: +52 81 8156 6000

European Product Information Centre
Free phone: 00 800 27 27 5374
(from AT, BE, CH, CZ, DE, DK, EE, ES, FI, FR, IE, IL, IS, IT, LU, MT, NL, NO, PL, PT, RU, SE, SK, UK, ZA)

© 2013 Parker Hannifin Corporation. All rights reserved.

Catalogue FDHB500UK v2.0 07/2013

Parker Hannifin
Hydraulic Filter Division Europe
Email: filtrationinfo@parker.com
www.parker.com/hfde

Your local authorized Parker distributor