

Gear Pumps / Motors

Series PGP / PGM
Fixed Displacement Pumps,
Cast-Iron and Aluminium Designs

parker.com/pmde

Parker

ENGINEERING YOUR SUCCESS.

Contents

		Page
Series 500 Aluminium		
PGP, PGM 500	Characteristics	5
PGP 502	Ordering code	6-7
PGP 505	Ordering code	8-9
PGP, PGM 511	Ordering code	10-11
PGP 517	Ordering code	12-13
PGP 502	Performance data	14
PGP 505	Performance data	15
PGP, PGM 511	Performance data	16
PGP 517	Performance data	17
PGP 502	Technical Data / Dimensions	18-19
	Mounting flange options	20
	Port options	21
	Drive shaft options	22
PGP 505	Technical Data / Dimensions	23-24
	Mounting flange options	25
	Port options	26
	Drive shaft options	27
	Drive shaft options	28
PGP, PGM 511	Technical Data / Dimensions	29-30
	Mounting flange options	31-34
	Outboard Berings	35
	Port options	36-37
	Drive shaft options	38-40
PGP 517	Technical Data / Dimensions	41-42
	Mounting flange options	43
	Port options	44
	Drive shaft options	46-48
PGP 511	Operating Conditions	49
PGP 517	Operating Conditions	50

Change History for edition 03.2017
Page 18, table. Max speed for 1.6 cc 4500 rpm, for 2.5 cc 4000 rpm.
Page 68, Shaft Load Capacity T2
Pages 14-17 and 56-58: Performance data

Parker Hannifin
Pump and Motor Division
Chemnitz, Germany

Tel: +45 63 12 83 00 | Email: ps@hymatik.com | www.hymatik.com | Hvidkaervej 27a, DK-5250 Odense SV, Denmark

Contents

Page

Series 600 Cast-Iron

PGP, PGM 600	Characteristics	51
PGP, PGM 620	Ordering code	52-53
PGP, PGM 640	Ordering Code	54-55
PGP, PGM 620	Performance data	56
PGP 625	Performance data	57
PGP, PGM 640	Performance data	58
PGP, PGM 620	Technical Data / Dimensions	59
PGP, 625	Technical Data / Dimensions	60
PGP, PGM 620	Technical Data / Dimensions	61
PGP 625	Technical Data / Dimensions	62
PGP, PGM 620/PGP 625	Mounting flange options	63-64
	Port options	65-66
	Drive shaft options	67-68
PGP, PGM 640	Technical Data / Dimensions	69-71
PGP 640/625	Dimensions	72
PGP, PGM 640	Mounting flange options	73-74
	Port options	75-76
	Drive shaft options	77-78
PGP, PGM 500/600	Shaft Loads / Fluids	78
	List of available pump combinations	79

Valve options

PGP 500/600	Pressure relief valve / adjustable internal vent	80
PGP511/517/620/625//640	Valve options / Priority Flow Divider / Ordering code	81-82
	Side Mounted Priority Flow Divider (Load Sense or Fixed Flow)	83
	Load Sensing Priority Valve	84
PGM511/620/640	Single Pressure Relief Valve	86
	Single Pressure Relief Valve with Anti-Cavitation	87
	Cross Port Pressure Relief Valves	88
	Cross Port Pressure Relief Valves with Anti-Cavitation	89
	Cross Port Pressure Relief Valves with Anti-Cavitation + Check Valves	90
	Solenoid Proportional Pressure Relief Valve	91
	Speed Sensor	92
PGP, PGM 500/600	Standard Seal Kits for pumps/motors 500 + 600	93
	Ordering examples	94-95

Tel: +45 63 12 83 00 | Email: ps@hymatik.com | www.hymatik.com | Hvidkaervej 27a, DK-5250 Odense SV, Denmark

⚠ WARNING – USER RESPONSIBILITY

FAILURE OR IMPROPER SELECTION OR IMPROPER USE OF THE PRODUCTS DESCRIBED HEREIN OR RELATED ITEMS CAN CAUSE DEATH, PERSONAL INJURY AND PROPERTY DAMAGE.

This document and other information from Parker-Hannifin Corporation, its subsidiaries and authorized distributors provide product or system options for further investigation by users having technical expertise.

The user, through its own analysis and testing, is solely responsible for making the final selection of the system and components and assuring that all performance, endurance, maintenance, safety and warning requirements of the application are met. The user must analyze all aspects of the application, follow applicable industry standards, and follow the information concerning the product in the current product catalogue and in any other materials provided from Parker or its subsidiaries or authorized distributors.

To the extent that Parker or its subsidiaries or authorized distributors provide component or system options based upon data or specifications provided by the user, the user is responsible for determining that such data and specifications are suitable and sufficient for all applications and reasonably foreseeable uses of the components or systems.

Offer of Sale

Please contact your Parker representation for a detailed ”Offer of Sale”.

Parker Hannifin
Pump and Motor Division
Chemnitz, Germany

Tel: +45 63 12 83 00 | Email: ps@hymatik.com | www.hymatik.com | Hvidkaervej 27a, DK-5250 Odense SV, Denmark

PGP 500 pumps offer superior performance, high efficiency and low noise operation at high operating pressures. They are produced in four frame sizes (PGP 502, PGP 505, PGP 511, PGP 517) with displacements ranging from 0.8 to 70 cm³/rev. A wide variety of standard options is available to meet specific application requirements.



Characteristics

- **Up to 280 bar continuous operation**
  High strength materials and large journal diameters provide low bearing loads for high pressure operation.
- **Low noise**
  PGP 502 - 9 tooth gear profile, PGP 505 and 517 - 13 tooth gear profile, PGP 511 - 12 tooth gear profile and optimized flow metering provide reduced pressure pulsation and exceptionally quiet operation.
- **High efficiency**
  Pressure balanced bearing blocks assure maximum efficiency under all operating conditions.
- **Application flexibility**
  International mounts and connections, integrated valve capabilities and common inlet multiple pump configurations provide unmatched design and application versatility.
- **Large range of integrated valves**

Characteristics

Pump type	Heavy-duty, aluminium, external gear.
Mounting	SAE, rectangular, thru-bolt standard specials on request.
Ports	SAE and metric split flanges and others
Shaft style	SAE splined, keyed, tapered, cylindrical tang drive, specials on request
Speed	500 - 5000 rpm, see Technical Data
Theor. displacement	See Technical Data
Drive	Drive direct with flexible coupling is recommended.
Axial / Radial load	Units subject to axial or radial loads must be specified with an outboard bearing.
Inlet pressure	Operating range 0.8 to 2 bar abs. Min. inlet pressure 0.5 bar abs. Short time without load. Consultation is recommended.
Outlet pressure	See Technical Data
Pressure rising rate	Max. 3000 bar/s
Flow velocity	See Nomograph for Pipe Velocity
Hydraulic fluids	Hydraulic oil HLP, DIN 51524-2
Fluid temperature	Range of operating temperature -15 to +80 °C. Max. permissible operating pressure dependent on fluid temperature. Temperature for cold start -20 to -15 °C at speed ≤ 1500 rpm. Max. permissible operating pressure dependent on fluid temperature.

Fluid viscosity	Range of operating viscosity 8 to 1000 mm²/s (511 & 517) 20 to 1000 mm²/s (502 & 505) Max. permissible operating pressure dependent on viscosity. Viscosity range for cold start 1000 to 2000 mm²/s at operating pressure p≤10 bar and speed n ≤1500 rpm.
Range of ambient temperature	-40 °C to +70 °C
Filtration	According to ISO 4406 Cl. 19/17/13
Direction of rotation (looking at the drive shaft)	Clockwise, counter-clockwise or double. Attention! Drive pump only in indicated direction of rotation.
Multiple pump assemblies	• Available in two or three section the limitations shown in the shaft loading rating table in this catalogue. • Max. load is determined by adding the torque values for each pumping section that will be simultaneously loaded.
Separate or common inlet capability	Separate inlet configuration: • Each gear housing has individual inlet and outlet ports. Common inlet configuration: • Two gear sets share a common inlet.

Tel: +45 63 12 83 00 | Email: ps@hymatik.com | www.hymatik.com | Hvidkaervej 27a, DK-5250 Odense SV, Denmark

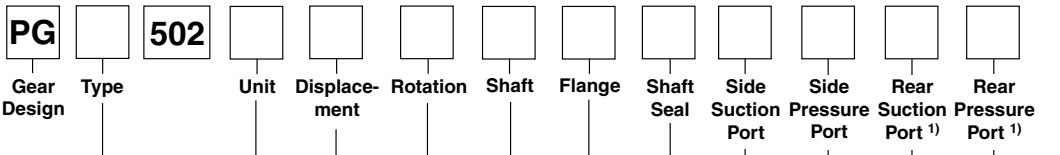

Code	Type
P	Pump

Code	Unit
	Pump
A	Single unit
B	Multiple unit

Displacement	
Code	ccm
0008	0.8
0012	1.2
0016	1.6
0021	2.1
0025	2.5
0033	3.3
0036	3.6
0043	4.3
0048	4.8
0058	5.8
0062	6.2
0079	7.9

Code	Rotation
C	Clockwise
A	Counter clock-wise

Code	Shaft
H1	Ø10, 3.0 Key, no thread, 36L, parallel
P2	Ø9.35, 8.8L, 2.4 Key, M6, taper 1:8
V1	5x6.5 long shaft w/o coupling tang drive

Not all variances of ordering codes can be offered. Please check available part numbers first.
For not yet implemented part numbers or special requests please contact Parker Hannifin.

1) Only coded for the last section.

	502								3)
Section Connection		Unit	Displacement	Shaft Seal	Side Suction Port	Side Pressure Port	Rear Suction Port 1)	Rear Pressure Port 1)	

Code	Section Connection
S	Separate inlets
C	Common inlets

Code	Port Options
B1	No ports
D2 2)	9/16 - 18 UNF thread
D3 2)*	3/4 - 16 UNF thread
E1	1/4 - 19 BSP thread
E2	3/8 - 19 BSP thread
E3*	1/2 - 14 BSP thread
G1 2)	M14x1.5 thread
G3 2)*	M18x1.5 thread
J1*	8 mm - Ø26 mm - M5 square flange
J2*	10 mm - Ø26 mm - M5 square flange
J3*	8 mm - Ø30 mm - M6 square flange
J4*	12 mm - Ø30 mm - M6 square flange

2) Non standard, on request only

*) Not usable for rear ports

Code	Shaft Seal
X	No seal
N	NBR
V	FPM, FKM

Code	Flange
D1	52.2x72.0 - Ø25.4 rectangular
H1	82.5 - Ø50.8 SAE "A-A" 2 bolt flange
P1	40.0x40.0 - Ø32.0 w/ seal ported, thrubolt flange

3) For further "B" triple unit repeat
displacement,
shaft seal between sections,
side suction port,
side pressure port,
rear suction port,
rear pressure port.

Tel: +45 63 12 83 00 | Email: ps@hymatik.com | www.hymatik.com | Hvidkaervej 27a, DK-5250 Odense SV, Denmark

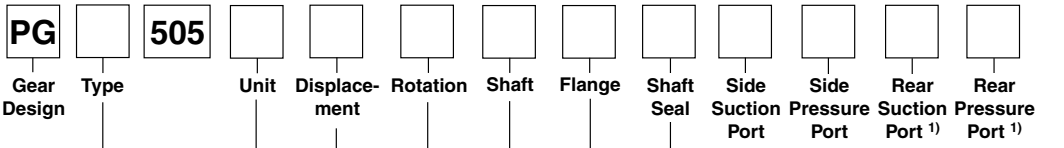

Code	Type
P	Pump

Code	Unit
	Pump
A	Single unit
B	Multiple unit
C	—

Displacement	
Code	ccm
0030	3.0
0040	4.0
0050	5.0
0060	6.0
0070	7.0
0080	8.0
0100	10.0
0120	12.0

Code	Rotation
C	Clockwise
A	Counter clock-wise

Code	Shaft
A1	9T, 16/32DP, 32L, SAE "A" spline
J1	Ø12.7, 3.2Key, no thread, 38L, parallel
K1	Ø15.88, 4.0Key, no thread, 32L, SAE "A", parallel
Q2	Ø14.25, 5.5L, 3.0Key, M10x1, taper 1:8

Code	Flange
D2	56.0x73.0 - Ø30.0 rectangular
H1	82.5 - Ø50.8 SAE "A-A" 2 bolt flange
H2	106.4 - Ø82.55 SAE "A" 2 bolt flange

Not all variances of ordering codes can be offered. Please check available part numbers first.
For not yet implemented part numbers or special requests please contact Parker Hannifin.

1) Only coded for the last section.

Tel: +45 63 12 83 00 | Email: ps@hymatik.com | www.hymatik.com | Hvidkaervej 27a, DK-5250 Odense SV, Denmark

	505								3)
Section Connection		Unit	Displacement	Shaft Seal	Side Suction Port	Side Pressure Port	Rear Suction Port 1)	Rear Pressure Port 1)	

Code	Section Connection
S	Separate inlets
C	Common inlets

Code	Port Options
B1	No ports
D2 2)	9/16 - 18 UNF thread
D3 2)	3/4 - 16 UNF thread
D4*	7/8 - 14 UNF thread
D5*	1 1/16 - 12UN
E2	3/8 - 19 BSP thread
E3*	1/2 - 14 BSP thread
E5*	3/4 - 16 BSP thread
G1	M14x1.5 thread
G3*	M18x1.5 thread
G4*	M22x1.5 thread
J3*	8 mm - Ø30 mm - M6 square flange
J4*	12 mm - Ø30 mm - M6 square flange
J5*	15 mm - Ø35 mm - M6 square flange
J7*	20 mm - Ø40 mm - M6 square flange

2) Non standard, on request only

*) Not usable for rear ports

Code	Shaft Seal
X	No seal
N	NBR
M	Double NBR
W	Double FPM

3) For further "B" triple unit repeat displacement, shaft seal between sections, side suction port, side pressure port, rear suction port, rear pressure port.

Parker Hannifin
Pump and Motor Division
Chemnitz, Germany

Tel: +45 63 12 83 00 | Email: ps@hymatik.com | www.hymatik.com | Hvidkaervej 27a, DK-5250 Odense SV, Denmark

PG		511										
Gear Design	Type		Unit	Displace-ment	Rotation	Shaft	Flange	Shaft Seal	Side Suction Port	Side Pressure Port	Rear Suction Port [1]	Rear Pressure Port [1]

Code	Type
P	Pump
M	Motor

Code	Unit	
	Pump	Motor
A	Single unit	Standard Motor without checks
B	Multiple unit	Standard Motor with two checks
C	—	Standard Motor w. one anti cavita-tion check (ACC)
D		Standard Motor w. one ACC + restrictor
M	Single distributor unit	—

Displacement*	
Code	ccm
0060	6.0
0080	8.0
0100	10.0
0110	11.0
0140	14.0
0160	16.0
0190	19.0
0230	23.0
0270	27.0
0330	33.0

*) Others on request

Code	Rotation
C	Clockwise
A	Counter clock-wise
B	bi-directional

Code	Shaft Seal
X	No seal
N	NBR
V	FPM, FKM
M	Double NBR
W	Double FPM

Code	Shaft
A1	9T, 16/32DP, 32L, SAE "A" spline
C1	11T, 16/32DP, 38.2L, SAE 19-4 spline
K1	Ø15.88, 4.0Key, no thread, 32L, SAE "A", parallel
L6	Ø19.05, 4.8 Key, no thread, 32L, SAE 19-1, parallel
S1	Ø17.0, 7.7L, 3.0 Key, M12x1.5, taper 1:5
S2	Ø16.65, 12.0L, 3.2 Key, M12x1.5, taper 1:8
V5	8x6.5 short shaft, tang drive
S8*	Ø20, 9.4L, 4.0 Key, M14x1.5, taper 1:5
F5	B8x32x36 DIN ISO 14 spline (similar to DIN 5462)

*) To be used with outboard bearing only

Not all variances of ordering codes can be offered. Please check available part numbers first.
For not yet implemented part numbers or special requests please contact Parker Hannifin.

[1] Only coded for the last section.

			511									4)
Motor Drain Option[3]	Drain Position [3]	Section Connection		Unit	Displacement	Shaft Seal	Side Suction Port	Side Pressure Port	Rear Suction Port [2]	Rear Pressure Port [2]		

Code	Section Connection
S	Separate inlets
C	Common inlets

Code	Drain Position
2	Drain on bottom
3	Drain on top
4	Rear drain
5	Drain right view on drive shaft
6	Drain left view on drive shaft

Code	Motor Drain Option
B1	no drain
A[2]	7/16-20 UNF thread
C	9/16-18 UNF thread
G	1/4 BSP thread
N[2]	M10x1 metric thread
P[2]	M12x1.5 metric thread

2) Non standard, on request only

Code	Flange
D3	71.4x96.0 - Ø36.47 rectangular
D4	72.0x100.0 - Ø80 rectangular
H2	106.4 - Ø82.55 SAE "A" 2 bolt flange
H3	146.1 - Ø101.6 SAE "B" 2 bolt flange
Q1[2]	60.0x60.0 - Ø52.0 w/o seal ,O' thrubolt flange
Q2	60.0x60.0 - Ø50.0 w. seal ,O' 'thrubolt flange
Q3[2]	60.0x60.0 - Ø52.0 w/o seal ,O' thrubolt flange
Q4	60.0x60.0 - Ø50.0 w. seal ,O',thrubolt flange
F4	72.0x100.0 - Ø80.0 rect., w. OBB and cont. drive shaft
C3	80x80 - Ø80.0 4 bolt flange

2) Non standard, on request only

Code	Port Options
B1	No ports
D2[2]	9/16 - 18 UNF thread
D3[2]	3/4 - 16 UNF thread
D4[2]	7/8 - 14 UNF thread
D5[2]	1 1/16 - 12 UN thread
D6[2]*	1 5/16 - 12 UN thread
D7[2]*	1 5/8 - 12 UN thread
E2	3/8 - 19 BSP thread
E3	1/2 - 12 BSP thread
E4*	5/8 - 14 BSP thread
E5*	3/4 - 14 BSP thread
E6*	1 - 11 BSP thread
E7*	1 1/4 - 11 BSP thread
G1[2]	M14x1.5 thread
G3[2]	M18x1.5 thread
G4[2]	M22x1.5 thread
G5[2]*	M26x1.5 thread
G7[2]*	M30x1.5 thread
J3[2]*	8 mm - Ø30 mm - M6 square
J4[2]*	12 mm - Ø30 mm - M6 square
J5*	15 mm - Ø35 mm - M6 square
J6[2]*	15 mm - Ø40 mm - M8 square
J7*	20 mm - Ø40 mm - M6 square
J8*	18 mm - Ø55 mm - M8 square
J9*	26 mm - Ø55 mm - M8 square

Code	Port Options
L1*	13 mm-Ø30 mm-M6 diamond
L2*	19 mm-Ø40 mm-M8 diamond
N1[2]*	1/2"-5/16-18UNC SAE Split Flange
N2[2]*	3/4"-3/8-16UNC SAE Split Flange
N3[2]*	1"-3/8-16UNC SAE Split Flange
N4[2]*	1 1/4"-7/16-14UNC SAE Split Flange
P1*	12.7 mm - M8 1/2" Metric Split Flange
P2*	19.0 mm - M10 3/4" Metric Split Flange
P3*	25.4 mm - M10 1" Metric Split Flange
P4*	31.8 mm - M10 1 1/4" Metric Split Flange

2)Non standard, on request only

*) Not usable for rear ports

[3] Only for motors

[4] For further "B" triple unit repeat
displacement,
shaft seal between sections,
side suction port,
side pressure port,
rear suction port,
rear pressure port.

Parker Hannifin
Pump and Motor Division
Chemnitz, Germany

Tel: +45 63 12 83 00 | Email: ps@hymatik.com | www.hymatik.com | Hvidkaervej 27a, DK-5250 Odense SV, Denmark

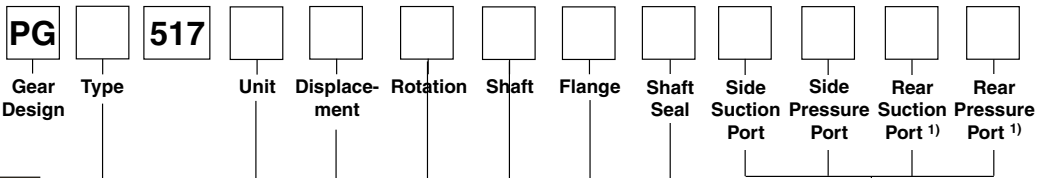

Code	Type
P	Pump

Code	Unit
	Pump
A	Single unit
B	Multiple unit
M	Single distributor unit

Displacement*	
Code	ccm
0160	16
0190	19
0230	23
0280	28
0330	33
0380	38
0440	44
0520	52
0700	70

*) Others on request

Code	Rotation
C	Clockwise
A	Counter clock-wise

Code	Shaft
D1	13T, 16/32DP, 41.2L, SAE "B" spline
E1	15T, 16/32DP, 46L, SAE "B-B" spline
M1	Ø22.2, 6.3Key, no thread, 41.2L, SAE "B", parallel
M2	Ø25.4, 6.3Key, no thread, 46L, SAE "B-B", parallel
T1	Ø21.59, 11.2L, 4.0 Key, M14x1.5, taper 1:8

Not all variances of ordering codes can be offered. Please check available part numbers first.
For not yet implemented part numbers or special requests please contact Parker Hannifin.

1) Only coded for the last section.

Tel: +45 63 12 83 00 | Email: ps@hymatik.com | www.hymatik.com | Hvidkaervej 27a, DK-5250 Odense SV, Denmark

	517								3)
Section Connection		Unit	Displacement	Shaft Seal	Side Suction Port	Side Pressure Port	Rear Suction Port [1]	Rear Pressure Port [1]	

Code	Section Connection
S	Separate inlets
C	Common inlets

Code	Shaft Seal
X	No seal
N	NBR
V	FPM, FKM
M	Double NBR
W	Double FPM

Code	Flange
D7	98.4x128.2 - Ø50.77 rectangular
H3	146.1 - Ø101.6 SAE "B" 2 bolt flange
K6	146.1 - Ø101.6 SAE "B" 2 bolt flange, aluminium

Code	Port Options
B1	No ports
D3[2)]	3/4 - 16 UNF thread
D4[2)]	7/8 - 14 UNF thread
D5[2)]	1 1/16 - 12 UN thread
D6[2)]	1 5/16 - 12 UN thread
D7[2)]*	1 5/8 - 12 UN thread
D8*	1 7/8 - 12 UN thread
E3	1/2 - 12 BSP thread
E4	5/8 - 14 BSP thread
E5	3/4 - 16 BSP thread
E6	1 - 11 BSP thread
E7*	1 1/4 - 11 BSP thread
E8*	1 1/2 - 11 BSP thread
G4[2)]	M22x1.5 thread
G5[2)]	M26x1.5 thread
G7[2)]	M30x1.5 thread
G8[2)]	M33x2 thread
G9[2)]*	M42x2 thread
J5*	15 mm - Ø35 mm - M6 square
J7*	20 mm - Ø40 mm - M6 square
J8*	18 mm - Ø55 mm - M8 square
J9*	26 mm - Ø55 mm - M8 square

Code	Port Options
L1*	13 mm-Ø30 mm-M6 diamond
L2*	19 mm-Ø40 mm-M8 diamond
L3*	27 mm-Ø51 mm-M10 diamond
N1[2)]*	1/2"-5/16-18UNC SAE Split Flange
N2[2)]*	3/4"-3/8-16UNC SAE Split Flange
N3[2)]*	1"-3/8-16UNC SAE Split Flange
N4[2)]*	1 1/4"-7/16-14UNC SAE Split Flange
N5[2)]*	1 1/2"-1/2-13UNC SAE Split Flange
P1[2)]*	12.7 mm - M8 1/2" Metric Split Flange
P2*	19.0 mm - M10 3/4" Metric Split Flange
P3*	25.4 mm - M10 1" Metric Split Flange
P4*	31.8 mm - M10 1 1/4" Metric Split Flange
P5*	38.1mm - M12 1 1/2" Metric Split Flange

2) Non standard, on request only

*) Not usable for rear ports

[3)] For further "B" triple unit repeat
displacement,
shaft seal between sections,
side suction port,
side pressure port,
rear suction port,
rear pressure port.

Parker Hannifin
Pump and Motor Division
Chemnitz, Germany

Tel: +45 63 12 83 00 | Email: ps@hymatik.com | www.hymatik.com | Hvidkaervej 27a, DK-5250 Odense SV, Denmark

PGP 502 - 0.8 CC

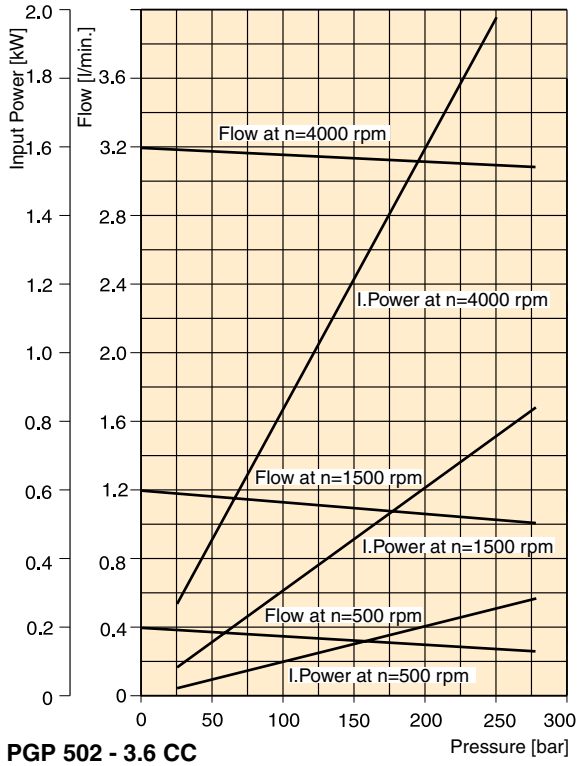

PGP 502 - 1.6 CC

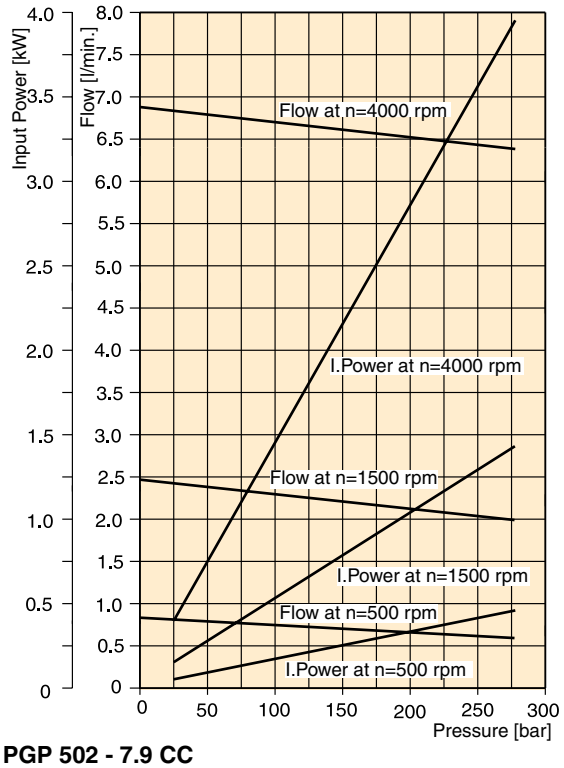

PGP 502 - 3.6 CC

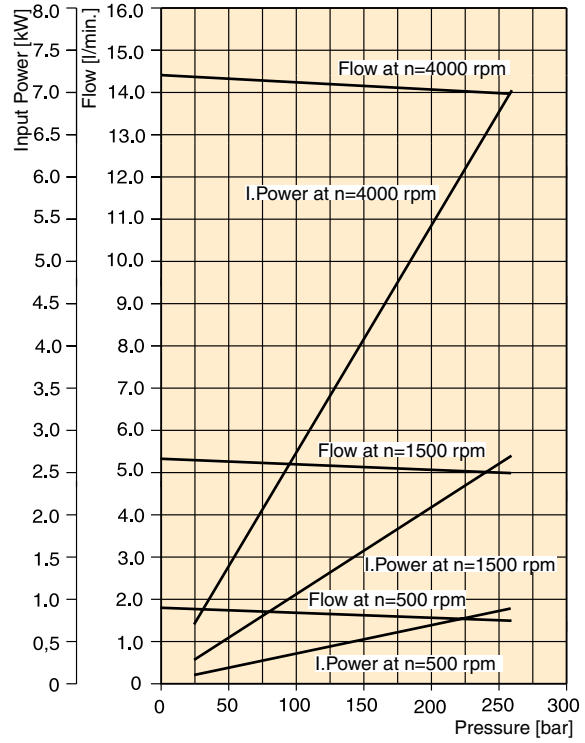

PGP 502 - 7.9 CC

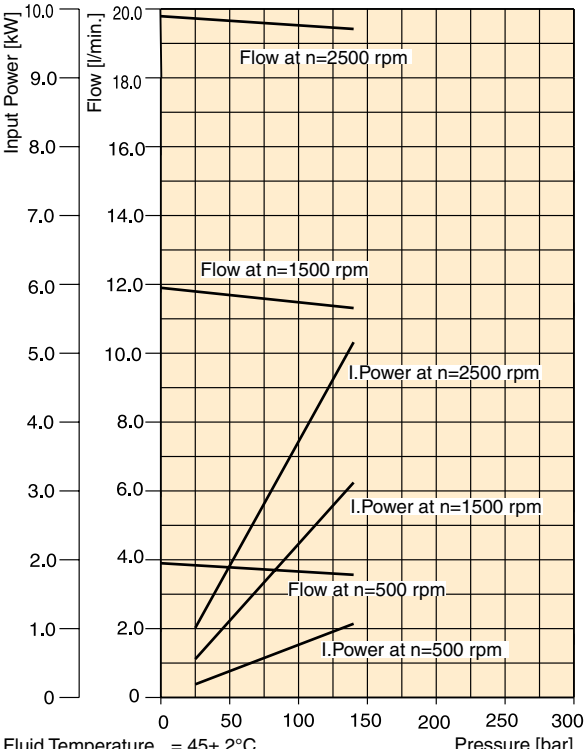

Fluid Temperature = 45± 2°C
Viscosity = 36 mm^2/s
Inlet Pressure = 0.9 + 0.1 bar absolute

Parker Hannifin
Pump and Motor Division
Chemnitz, Germany

Tel: +45 63 12 83 00 | Email: ps@hymatik.com | www.hymatik.com | Hvidkaervej 27a, DK-5250 Odense SV, Denmark

PGP 505 - 3.0CC

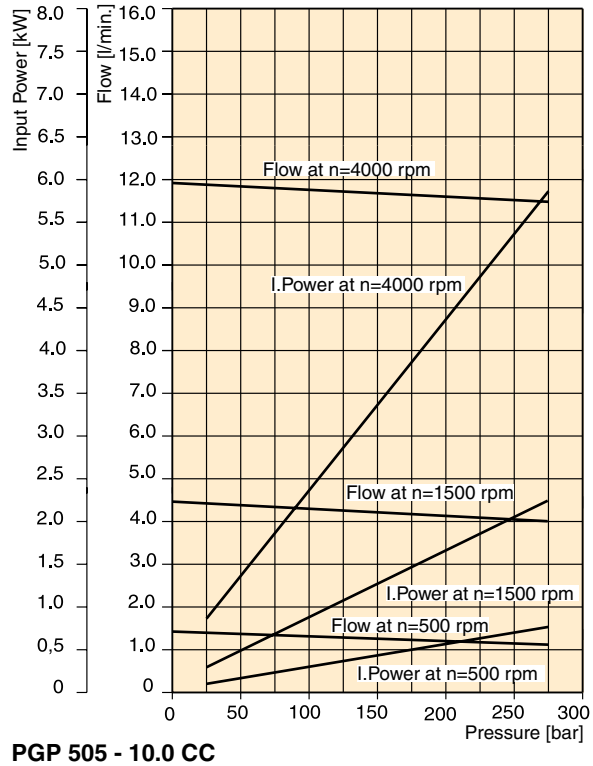

PGP 505 - 6.0 CC

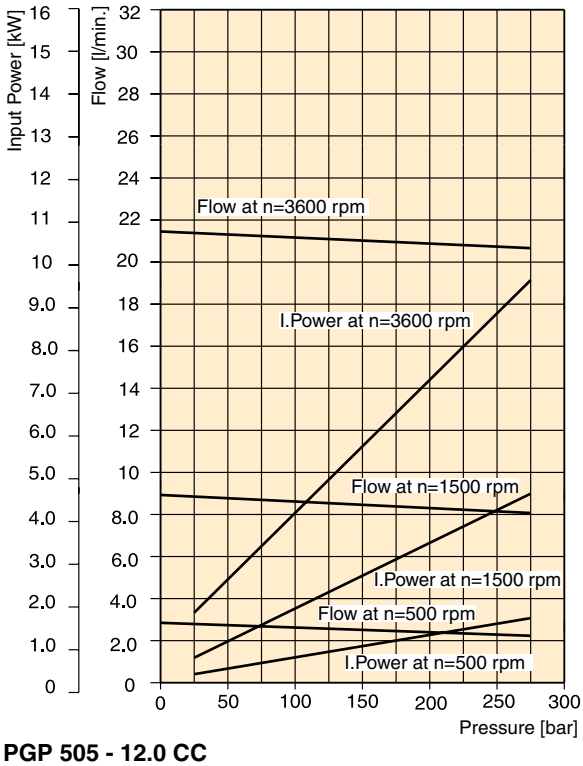

PGP 505 - 10.0 CC

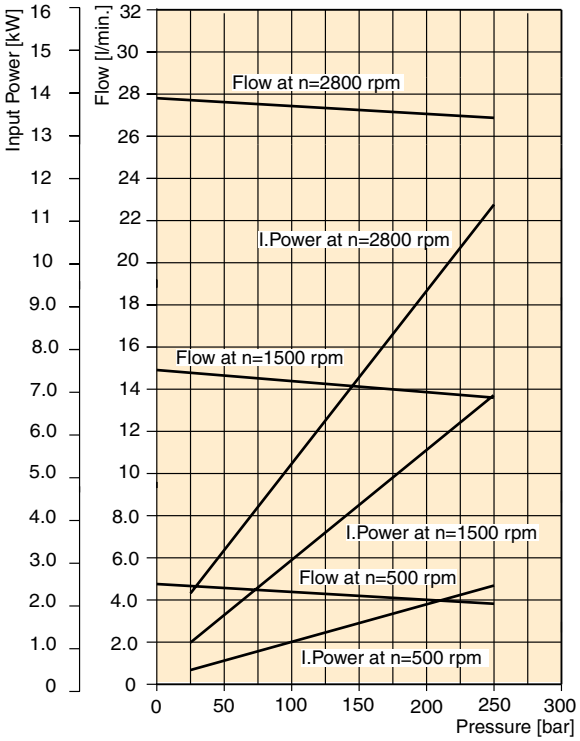

PGP 505 - 12.0 CC

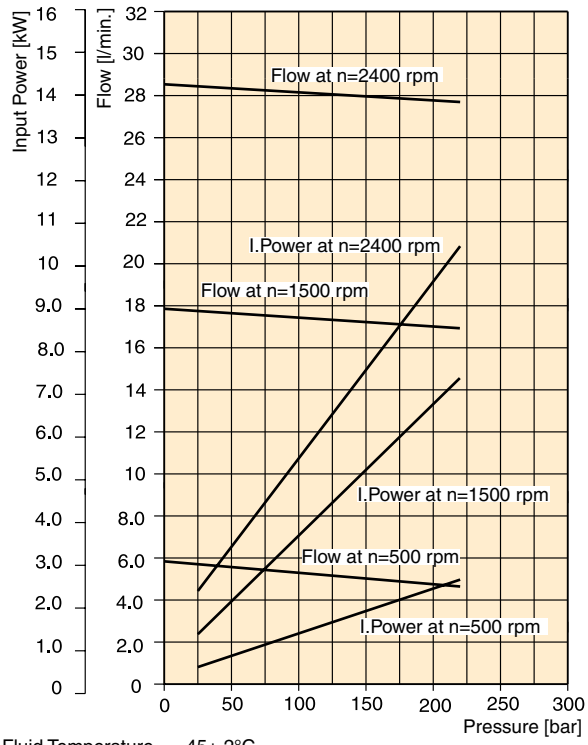

Fluid Temperature	= 45± 2°C
Viscosity	= 36 mm^2/s
Inlet Pressure	= 0.9 + 0.1 bar absolute

Parker Hannifin
Pump and Motor Division
Chemnitz, Germany

PGP/PGM 511 - 6.0 CC

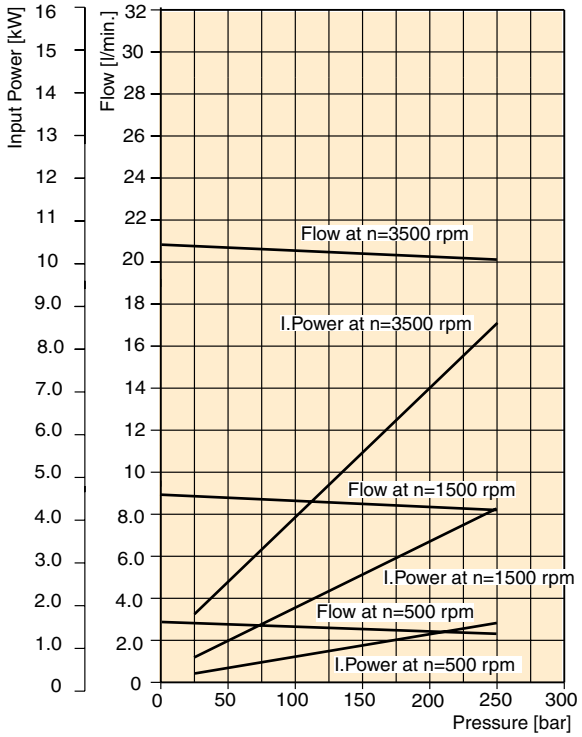

PGP 511 - 10.0 CC

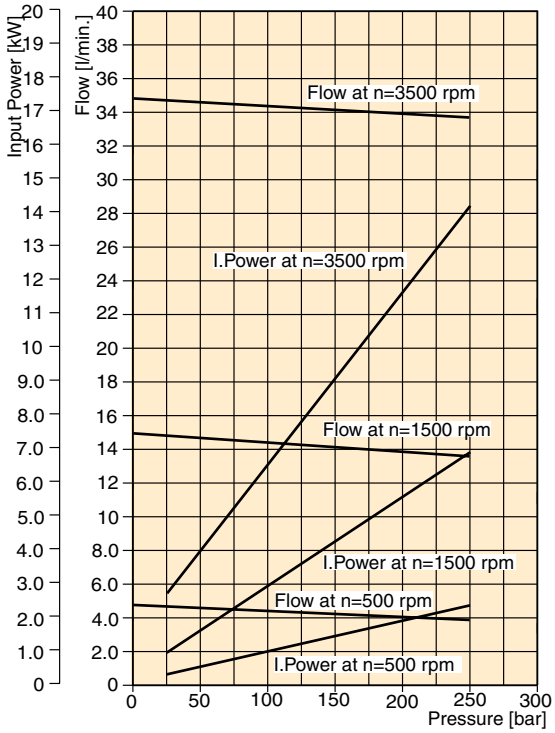

PGP/PGM 511 - 19.0 CC

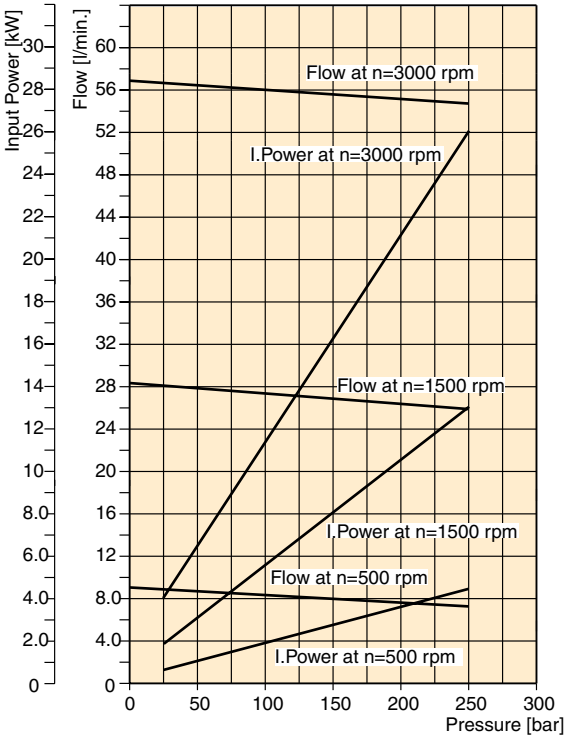

PGP 511 - 33.0 CC

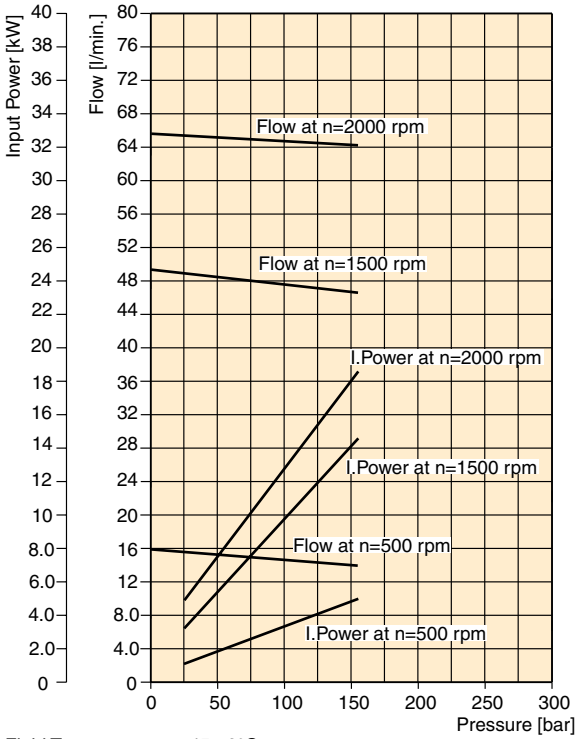

Fluid Temperature	= 45± 2°C
Viscosity	= 36 mm^2/s
Inlet Pressure	= 0.9 + 0.1 bar absolute

Parker Hannifin
Pump and Motor Division
Chemnitz, Germany

Tel: +45 63 12 83 00 | Email: ps@hymatik.com | www.hymatik.com | Hvidkaervej 27a, DK-5250 Odense SV, Denmark

PGP 517- 16.0 CC

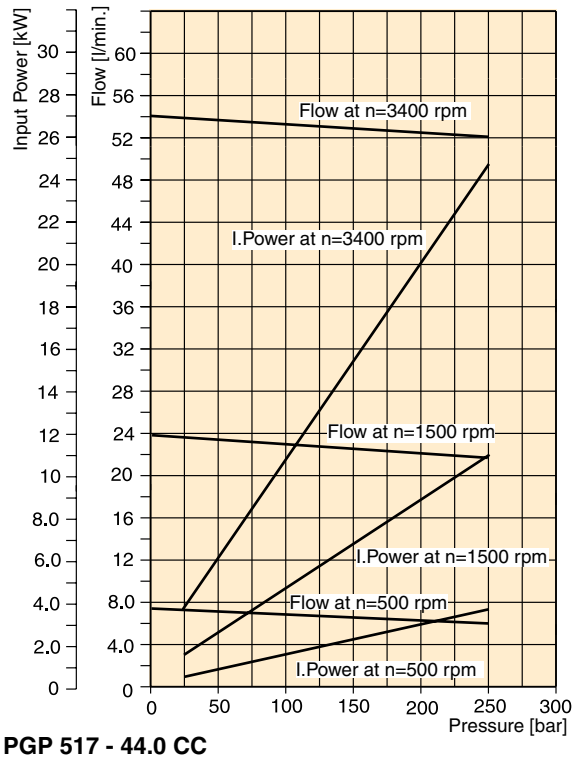

PGP 517 -28.0 CC

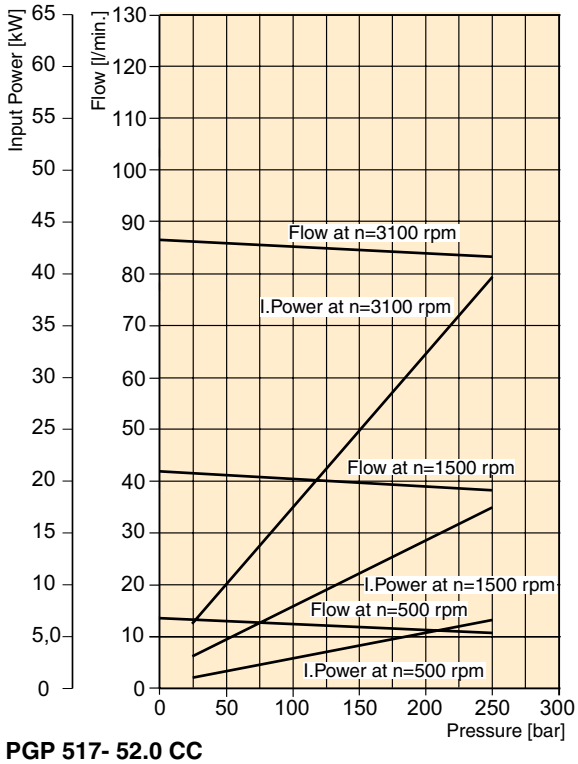

PGP 517 - 44.0 CC

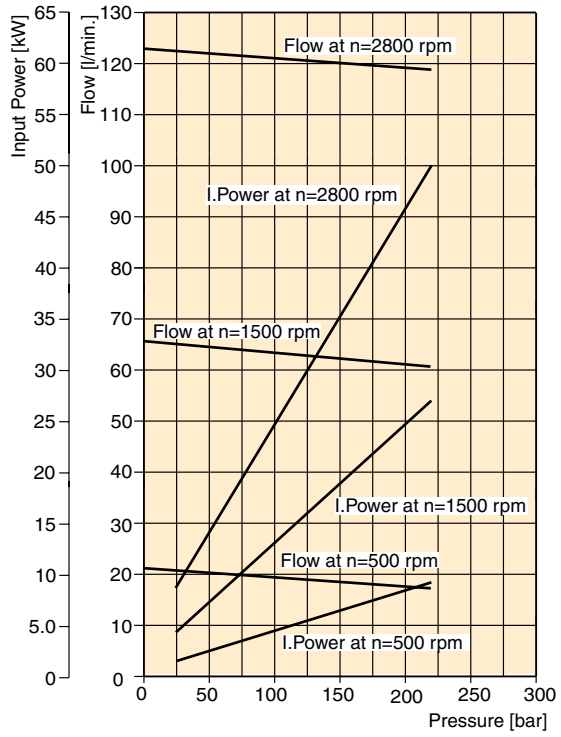

PGP 517- 52.0 CC

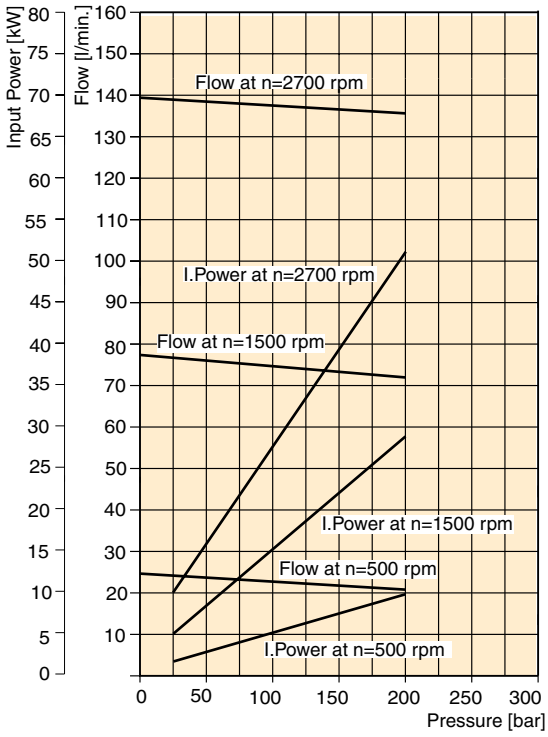

Fluid Temperature = 45± 2°C
Viscosity = 36 mm^2/s
Inlet Pressure = 0.9 + 0.1 bar absolute

Parker Hannifin
Pump and Motor Division
Chemnitz, Germany

Tel: +45 63 12 83 00 | Email: ps@hymatik.com | www.hymatik.com | Hvidkaervej 27a, DK-5250 Odense SV, Denmark

PGP 502 Pump Specification - Standard Displacements

Pump Displacement	Code	0008	0012	0016	0021	0025	0033	0036	0043	0048	0058	0062	0079
	cm³/rev	0.8	1.2	1.6	2.1	2.5	3.3	3.6	4.3	4.8	5.8	6.2	7.9
Max. Continuous Pressure	bar	280	280	280	280	280	280	260	250	230	200	180	160
Minimum Speed @ Max. outlet press.	rpm	500	500	500	500	500	500	500	500	500	500	500	500
Maximum Speed @ 0 Inlet & Max. outlet press.	rpm	5000	5000	4500	4500	4000	4000	4000	3500	3000	3000	3000	3000
Pump Input Power @ Max. Press. and 1500 rpm	kW	0.82	1.1	1.4	1.7	2.0	2.5	2.6	2.6	2.4	2.8	2.9	3.0
Dimension "L"	mm	35.3	36.8	38.3	39.9	41.5	44.5	45.6	48.5	50.0	53.8	55.3	61.6
Approximate Weight [1]	kg	1.1	1.1	1.1	1.1	1.2	1.2	1.2	1.3	1.4	1.4	1.5	1.6

[1] Single pump with Flange D1 and Port end cover B1

Single Unit PGP 502

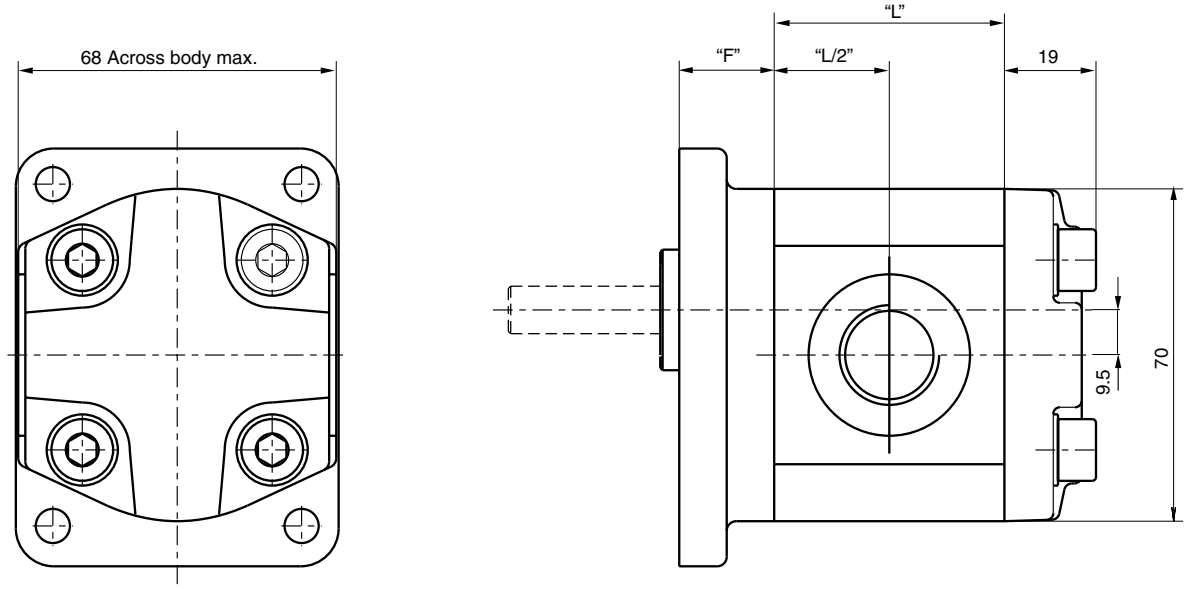

Dimension "L" see table above
Dimension "F" see flanges on page 20
Dimension Shafts see page 22

Tel: +45 63 12 83 00 | Email: ps@hymatik.com | www.hymatik.com | Hvidkaervej 27a, DK-5250 Odense SV, Denmark

Single Unit PGP 502 with rear ports

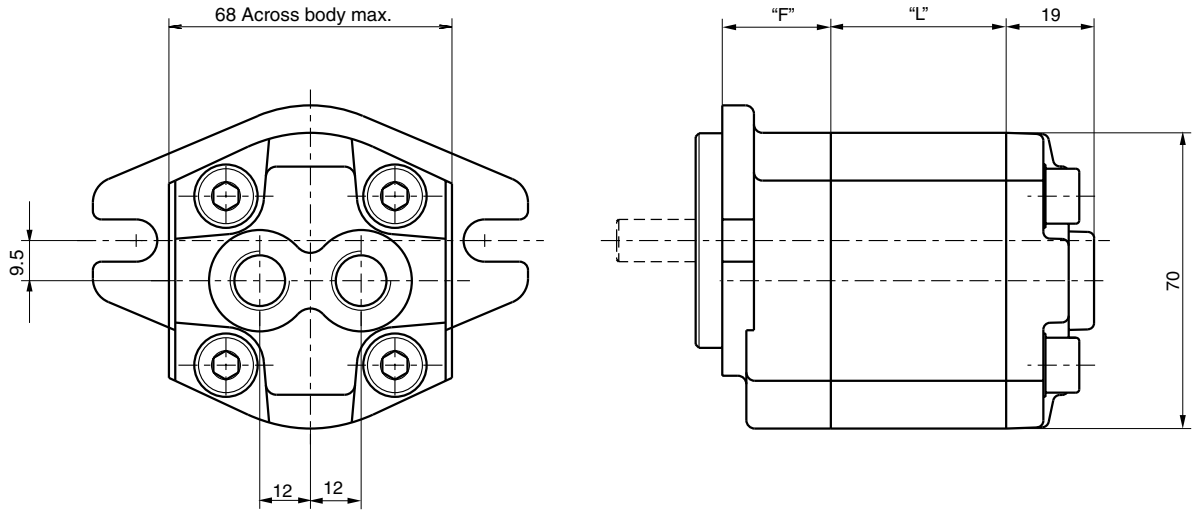

Dimension "L" see table on page 18
Dimension "F" see flanges on page 20
Dimension Shafts see page 22

Tandem Unit PGP 502

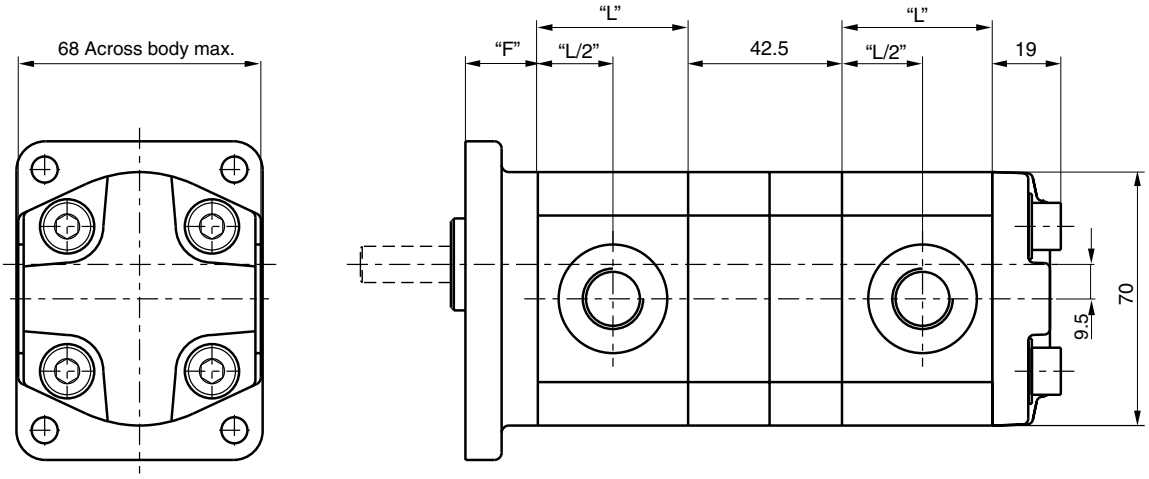

Dimension "L" see table on page 18
Dimension "F" see flanges on page 20
Dimension Shafts see page 22

Parker Hannifin
Pump and Motor Division
Chemnitz, Germany

Tel: +45 63 12 83 00 | Email: ps@hymatik.com | www.hymatik.com | Hvidkaervej 27a, DK-5250 Odense SV, Denmark

PGP 502 Mounting Flange

Code D1

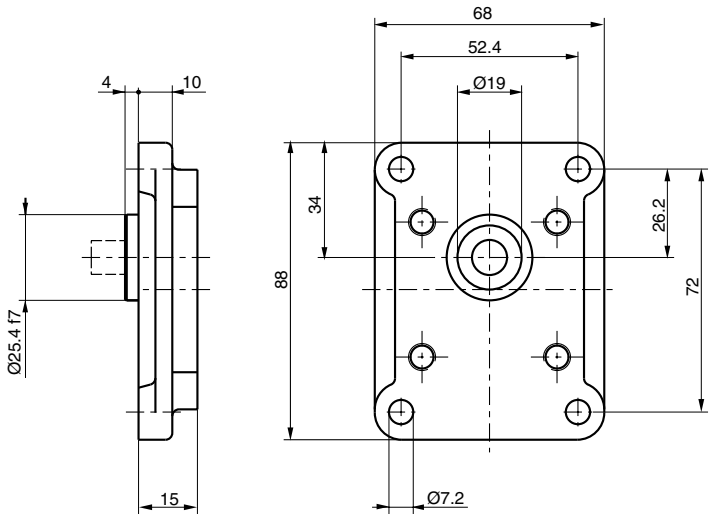

Code H1

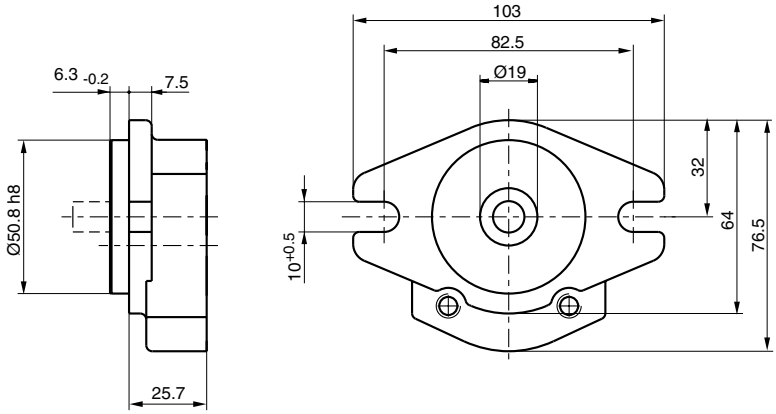

Code P1

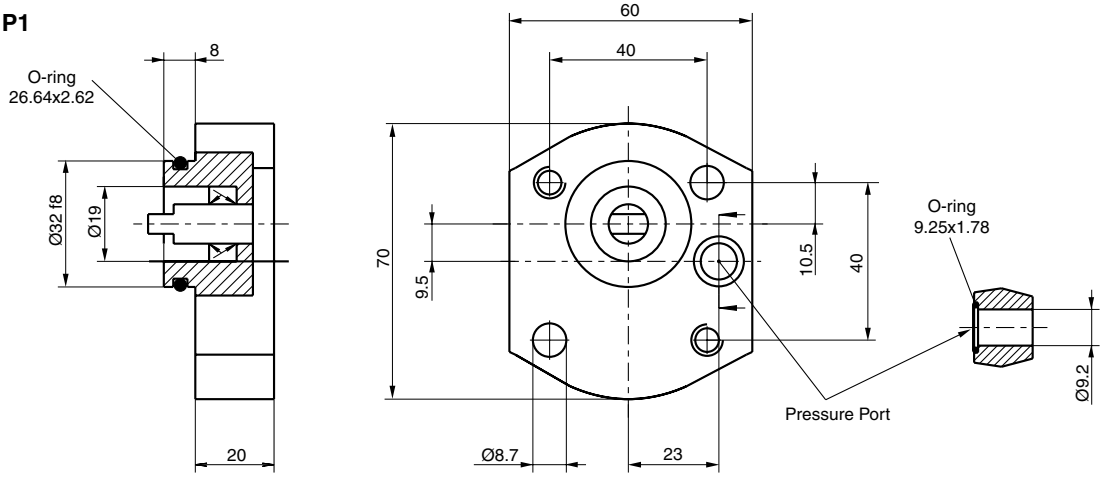

Parker Hannifin
Pump and Motor Division
Chemnitz, Germany

Tel: +45 63 12 83 00 | Email: ps@hymatik.com | www.hymatik.com | Hvidkaervej 27a, DK-5250 Odense SV, Denmark

PGP 502 Porting

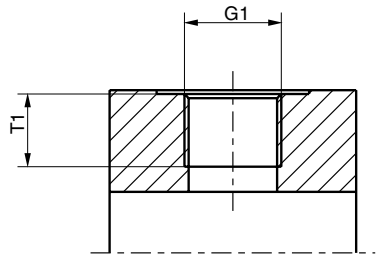

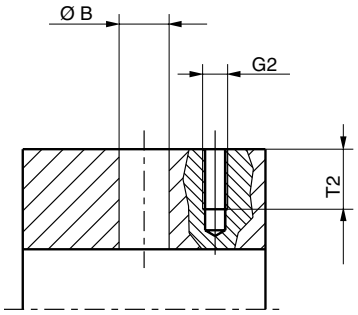

Code E British Standard Pipe Parallel (BSPP)
Code G Metric straight thread

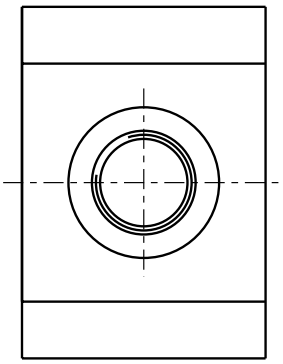

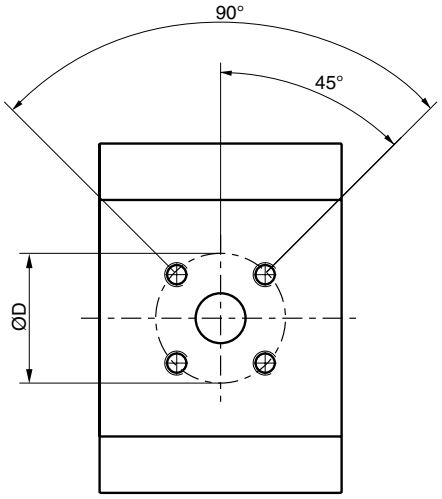

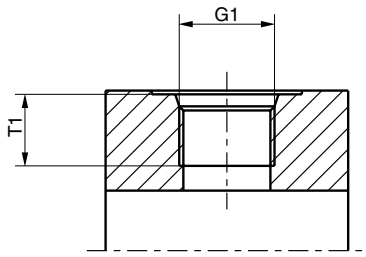

Code J European flange

Code D SAE straight thread

PGP 502

Code	G1	G2	T1	Ø B	Ø D	T2
D2	9/16-18 UNF		12.7			
D3	3/4-16 UNF		14.3			
E1	1/4-19 BSP		12.0			
E2	3/8-19 BSP		12.0			
E3	1/2-14 BSP		14.0			
G1	M14x1.5		12.0			
G3	M18x1.5		12.0			
J1		M5		8.0	26.0	12.0
J2		M5		10.0	26.0	12.0
J3		M6		8.0	30.0	12.0
J4		M6		12.0	30.0	12.0

Tel: +45 63 12 83 00 | Email: ps@hymatik.com | www.hymatik.com | Hvidkaervej 27a, DK-5250 Odense SV, Denmark

PGP 502 Drive Shaft

Code H1

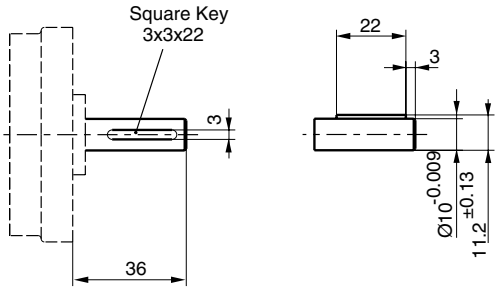

Code P2

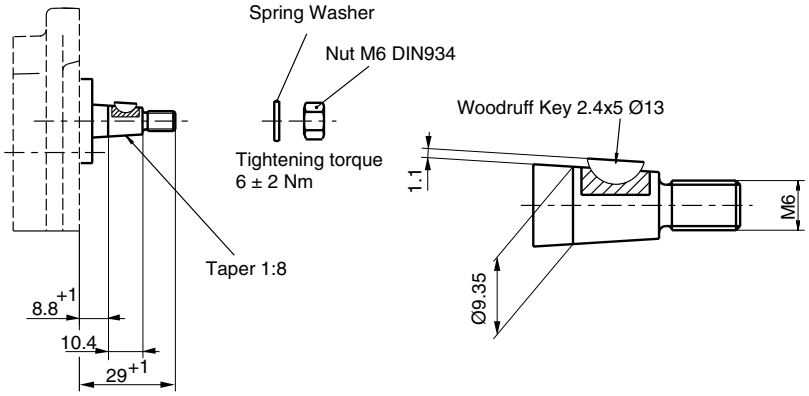

Code V1

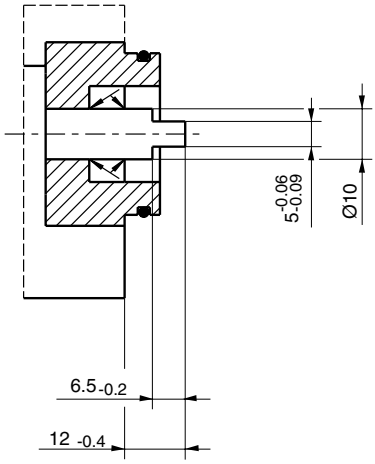

PGP/PGM 502 - Shaft Load Capacity

Code	Description		Torque Rating [Nm]
H1	Ø10,3.0 KEY, no thread, 36L	parallel	30
P2	Ø9.95, 8.8L, 2.4 KEY, M6	taper 1:8	30
V1	5x6.5 long shaft w/o coupling	tang drive	20

$$\text{Torque [Nm]} = \frac{\text{Displacement [cm}^3\text{/rev]} \times \text{Pressure [bar]}}{57.2}$$

Tel: +45 63 12 83 00 | Email: ps@hymatik.com | www.hymatik.com | Hvidkaervej 27a, DK-5250 Odense SV, Denmark

PGP 505 Specification - Standard Displacements

Pump Displacement	Code	0030	0040	0050	0060	0070	0080	0100	0110	0120
	cm³/rev	3.0	4.0	5.0	6.0	7.0	8.0	10.0	11.0	12.0
Max. Continuous Pressure	bar	275	275	275	275	275	275	250	250	220
Minimum Speed @ Max. outlet pressure	rpm	500	500	500	500	500	500	500	500	500
Maximum Speed @ 0 Inlet & Max. outlet pressure	rpm	4000	4000	4000	3600	3300	3000	2800	2400	2400
Pump Input Power @ Max. Pressure and 1500 rpm	kW	2.3	3.0	3.8	4.5	5.3	6.0	6.9	7.6	7.5
Dimension "L"	mm	41.1	43.8	46.5	49.1	51.8	54.5	59.8	62.5	65.2
Approximate Weight1)	kg	2.22	2.27	2.32	2.38	2.43	2.48	2.58	2.63	2.68

[1)] Single pump with Flange D3 and Port end cover B1

Single Unit PGP 505

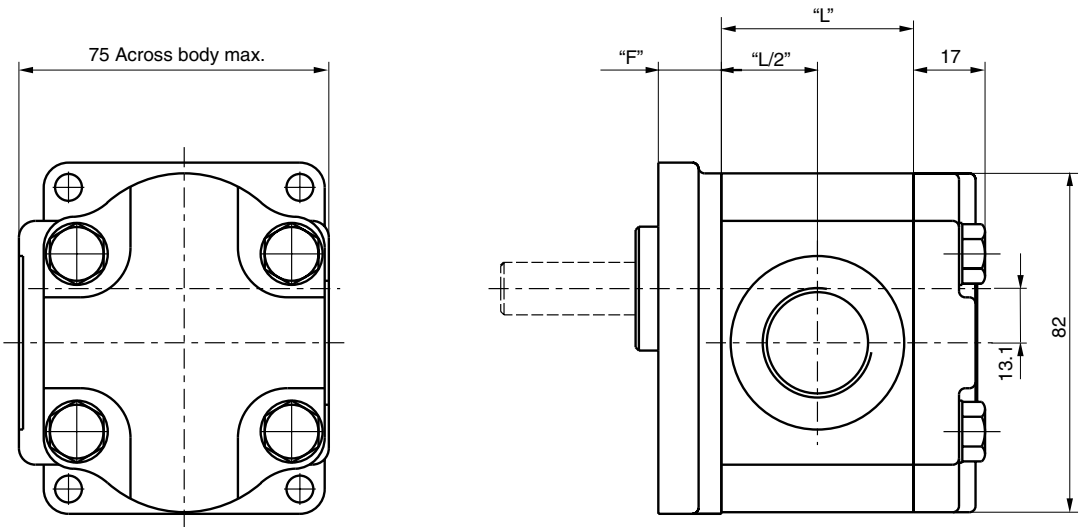

Dimension "L" see table above
Dimension "F" see flanges on pages 25
Dimension Shafts see pages 27 and 28

Single Unit PGP 505 with rear ports

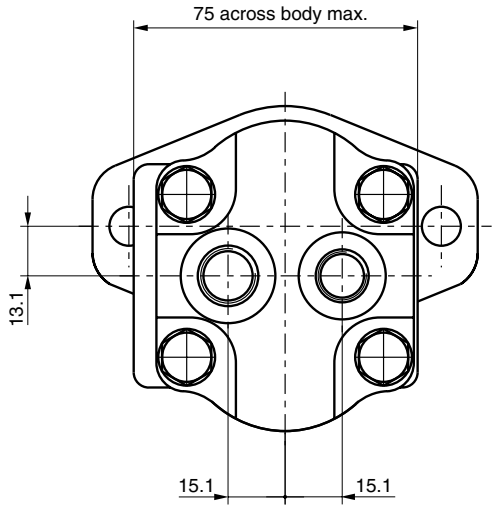

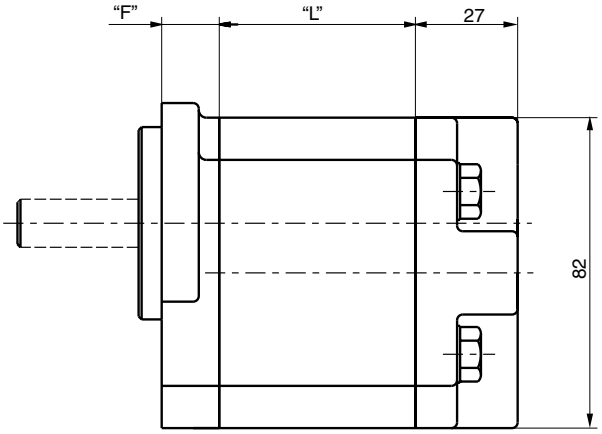

Dimension "L" see table on page 23
Dimension "F" see flanges on pages 25
Dimension Shafts see pages 27 and 28

Tandem Unit PGP 505

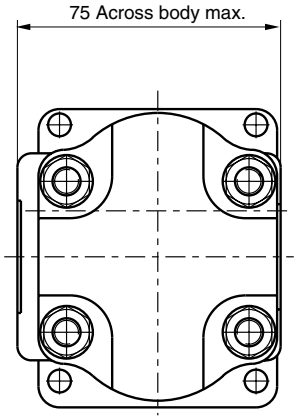

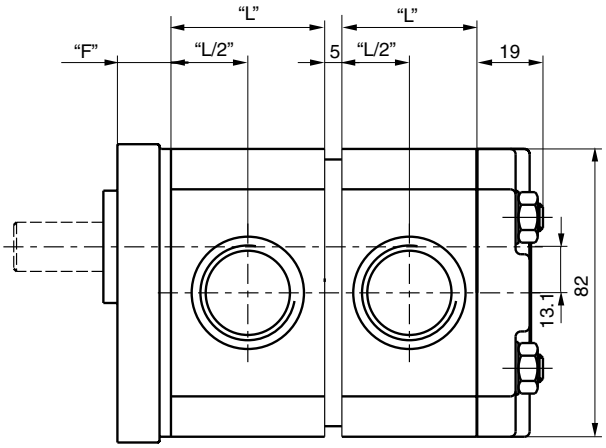

Dimension "L" see table on page 23
Dimension "F" see flanges on pages 25
Dimension Shafts see pages 27 and 28

Parker Hannifin
Pump and Motor Division
Chemnitz, Germany

Tel: +45 63 12 83 00 | Email: ps@hymatik.com | www.hymatik.com | Hvidkaervej 27a, DK-5250 Odense SV, Denmark

PGP 505 Mounting Flange

Code D2

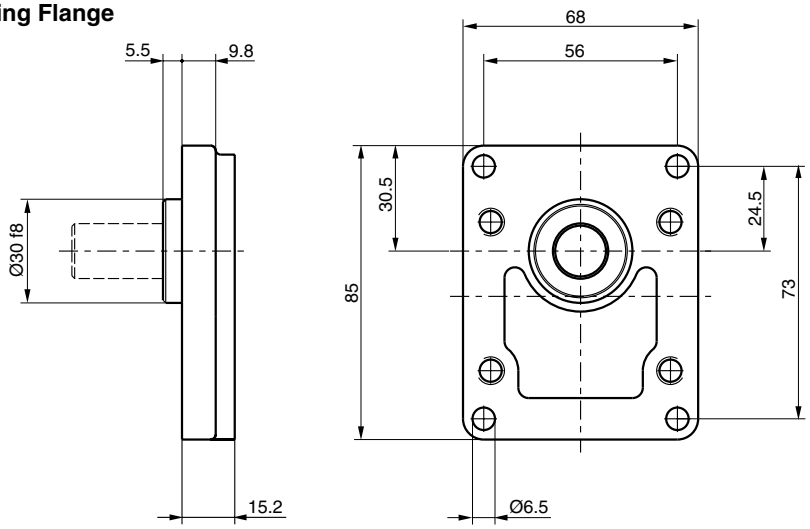

Code H1

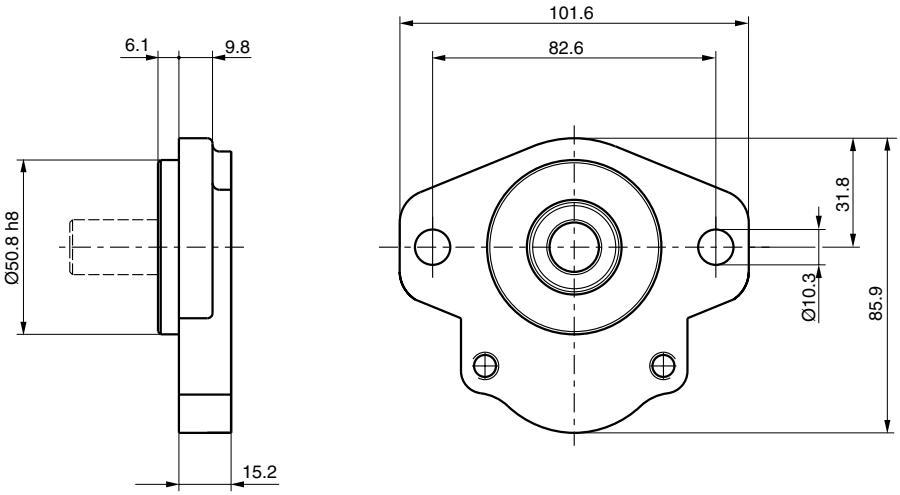

Code H2

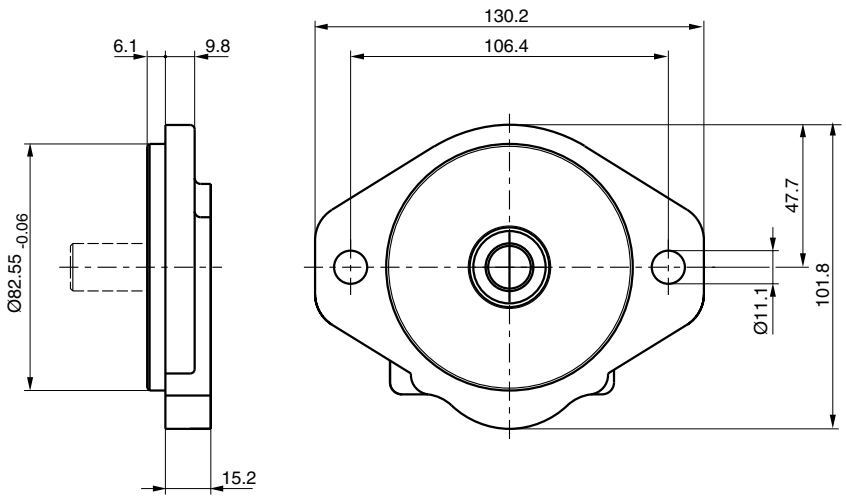

Parker Hannifin
Pump and Motor Division
Chemnitz, Germany

Tel: +45 63 12 83 00 | Email: ps@hymatik.com | www.hymatik.com | Hvidkaervej 27a, DK-5250 Odense SV, Denmark

PGP 505 Porting

Code E
British Standard Pipe

Code G
Metric straight thread

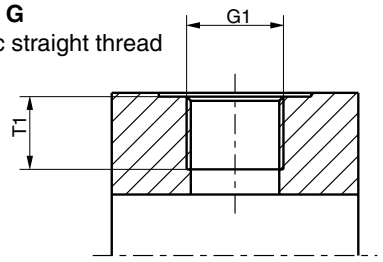

Code D
SAE straight thread

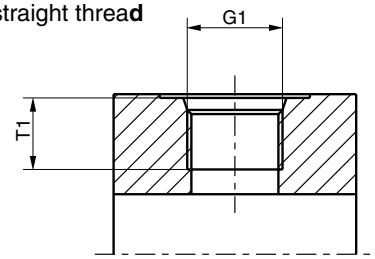

Code J
European flange

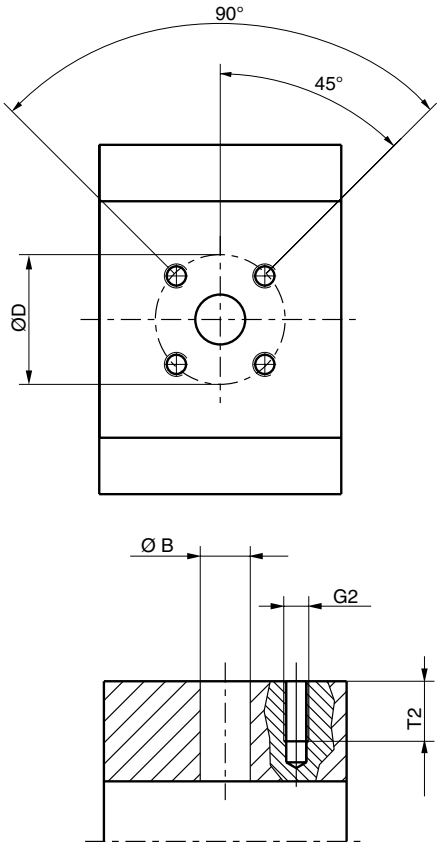

PGP 505

Code	G1	G2	T1	∅ B	∅ D	S	T2
Thread	Thread	Dimensions					
D2	9/16-18 UNF		12.7				
D3	3/4-16 UNF		14.3				
D4	7/8-14 UNF		16.7				
D5	1 1/16-12 UN		19.0				
E2	3/8-19 BSP		12.0				
E3	1/2-14 BSP		14.0				
E5	3/4-14 BSP		16.0				
G1	M 14x1.5		12.0				
G3	M 18x1.5		12.0				
G4	M 22x1.5		14.0				
J3		M6		8.0	30.0		12.0
J4		M6		12.0	30.0		12.0
J5		M6		15.0	35.0		12.5
J7		M6		20.0	40.0		13.0
K5		1/4UNC	14.2			25.15	13.0

Tel: +45 63 12 83 00 | Email: ps@hymatik.com | www.hymatik.com | Hvidkaervej 27a, DK-5250 Odense SV, Denmark

PGP 505 Drive Shaft

Code Q2

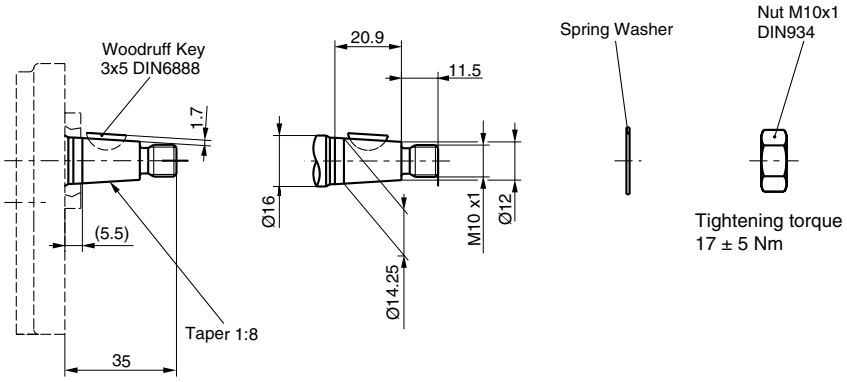

Code A1

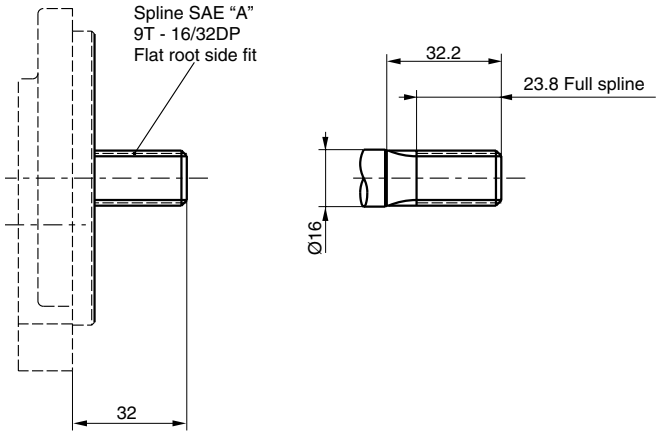

Parker Hannifin
Pump and Motor Division
Chemnitz, Germany

Tel: +45 63 12 83 00 | Email: ps@hymatik.com | www.hymatik.com | Hvidkaervej 27a, DK-5250 Odense SV, Denmark

PGP 505 Drive Shaft

Code J1

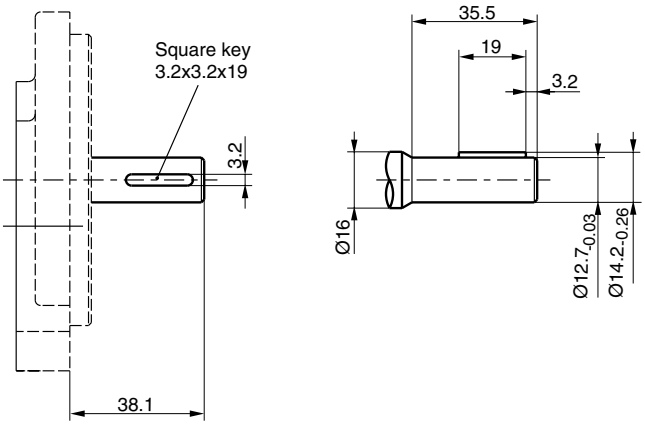

Code K1

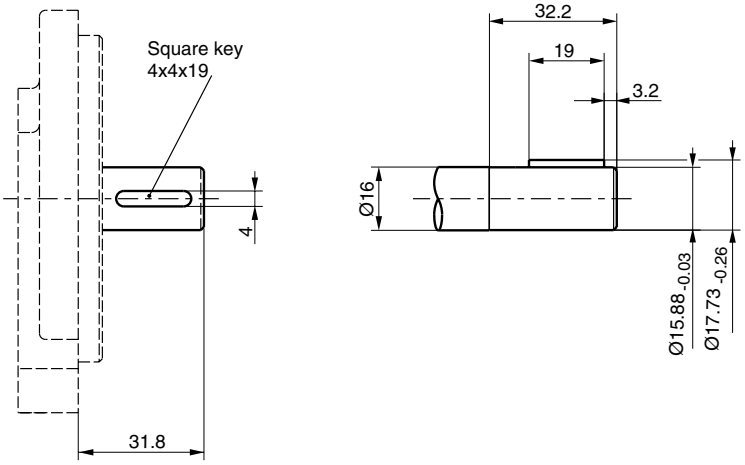

PGP 505 - Shaft Load Capacity

Code	Description		Torque Rating [Nm]
A1	9T,16/32DP, 32L, SAE“A“	spline	108
J1	Ø12.7, 3.2 KEY, no thread, 38L	parallel	43
K1	Ø15.88, 4.0 KEY, no thread, 32L, SAE“A“	parallel	85
Q2	Ø14.25, 5.5L, 3.0 KEY, M10x1	taper 1:8	68
	Multiple pump connection shaft		36

$$\text{Torque [Nm]} = \frac{\text{Displacement [cm}^3\text{/rev]} \times \text{Pressure [bar]}}{57.2}$$

Parker Hannifin
Pump and Motor Division
Chemnitz, Germany

Tel: +45 63 12 83 00 | Email: ps@hymatik.com | www.hymatik.com | Hvidkaervej 27a, DK-5250 Odense SV, Denmark

PGP/PGM 511 Specification - Standard Displacements

Pump Displacement	Code	0060	0080	0100	0110	0140	0160	0190	0230	0270	0330
	cm³/rev	6.0	8.0	10.0	11.0	14.0	16.0	19.0	23.0	27.0	33.0
Max. Continuous Pressure	bar	250	250	250	250	250	250	250	225	190	155
Minimum Speed @ 0 Inlet & Max. outlet pressure	rpm	500	500	500	500	500	500	500	500	500	500
Maximum Speed @ 0 Inlet & Max. outlet pressure	rpm	3500	3500	3500	3500	3500	3500	3250	2750	2350	2000
Pump Input Power @ Max. Pressure and 1500 rpm	kW	4.5	6.0	7.5	8.3	10.5	12.0	14.3	14.7	14.9	17.3
Dimension "L"	mm	50.1	53.3	56.5	58.0	62.8	65.9	70.6	76.9	83.2	92.6
Approximate Weight [1]	kg	3.40	3.47	3.55	3.57	3.71	3.79	3.91	4.06	4.21	4.45

[1] Single pump with Flange Q1 and Port end cover B1

Distributor Unit PGP 511

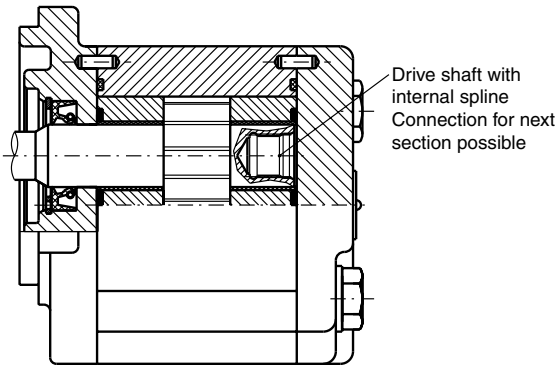

Single Unit PGP/PGM 511

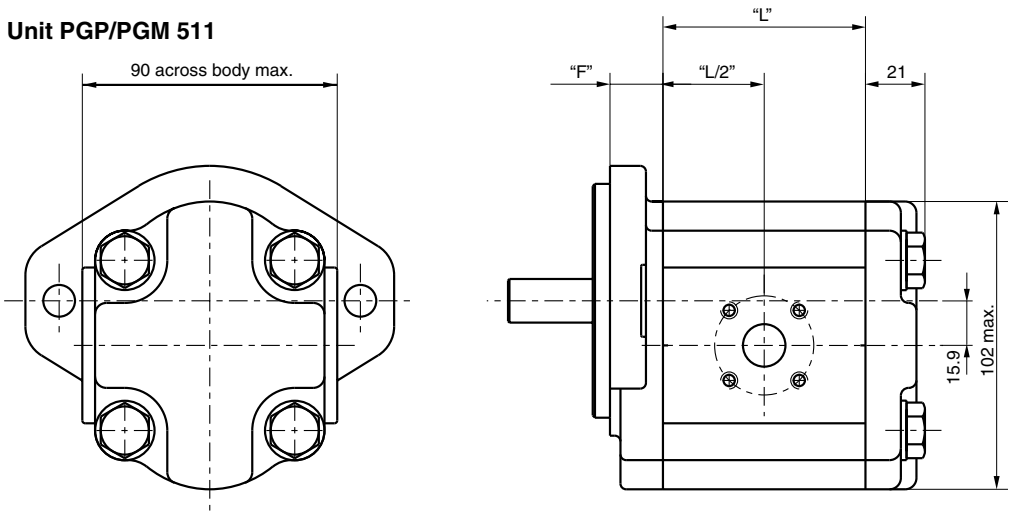

Dimension "L" see table above
Dimension "F" see flanges on pages 31 to 34
Dimension Shafts see pages 38 to 40

Parker Hannifin
Pump and Motor Division
Chemnitz, Germany

Tel: +45 63 12 83 00 | Email: ps@hymatik.com | www.hymatik.com | Hvidkaervej 27a, DK-5250 Odense SV, Denmark

Single Unit PGP/PGM 511 with rear ports

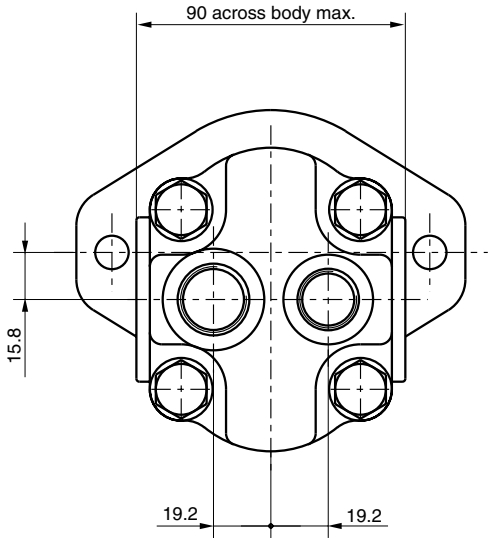

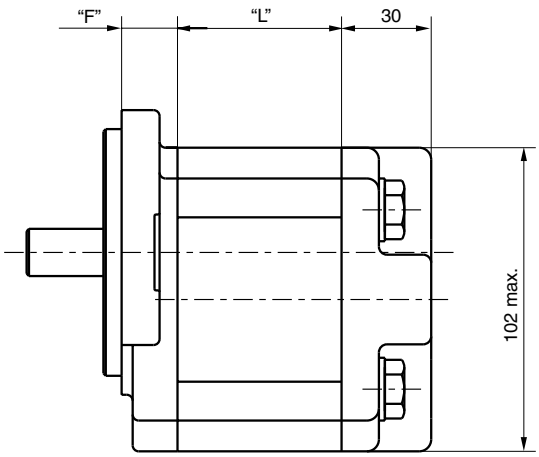

Dimension "L" see table on page 29
Dimension "F" see flanges on pages 31 to 34
Dimension Shafts see pages 38 to 40

Tandem Unit PGP/PGM 511

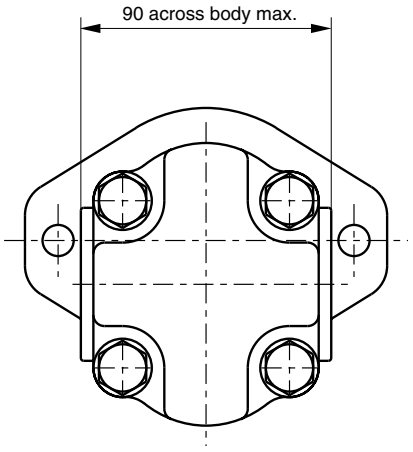

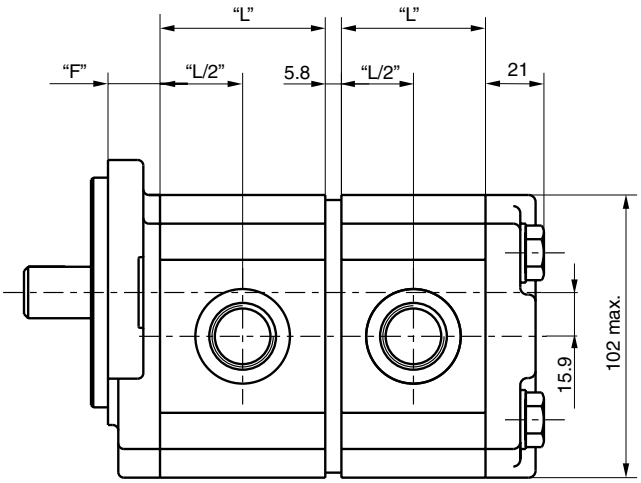

Dimension "L" see table on page 29
Dimension "F" see flanges on pages 31 to 34
Dimension Shafts see pages 38 to 40

Parker Hannifin
Pump and Motor Division
Chemnitz, Germany

Tel: +45 63 12 83 00 | Email: ps@hymatik.com | www.hymatik.com | Hvidkaervej 27a, DK-5250 Odense SV, Denmark

PGP/PGM 511 Mounting Flange

Code D3

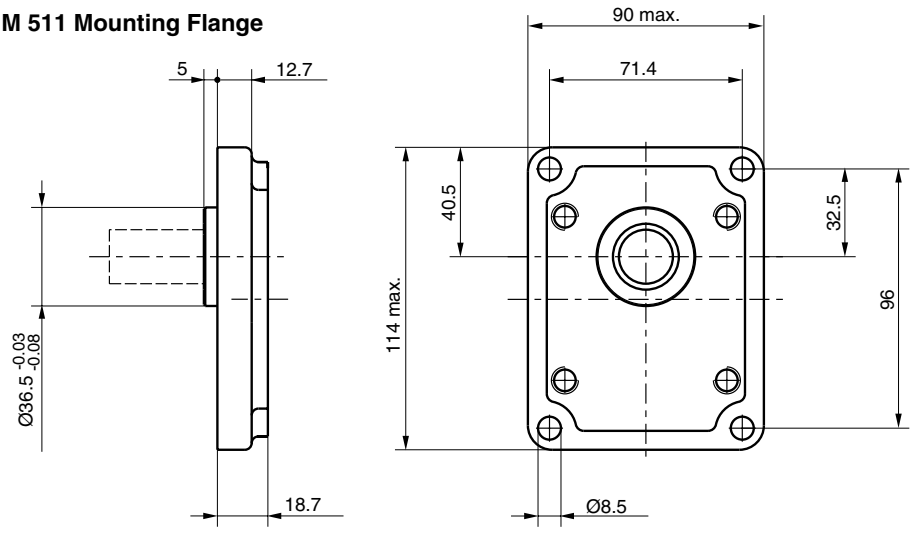

Code D4

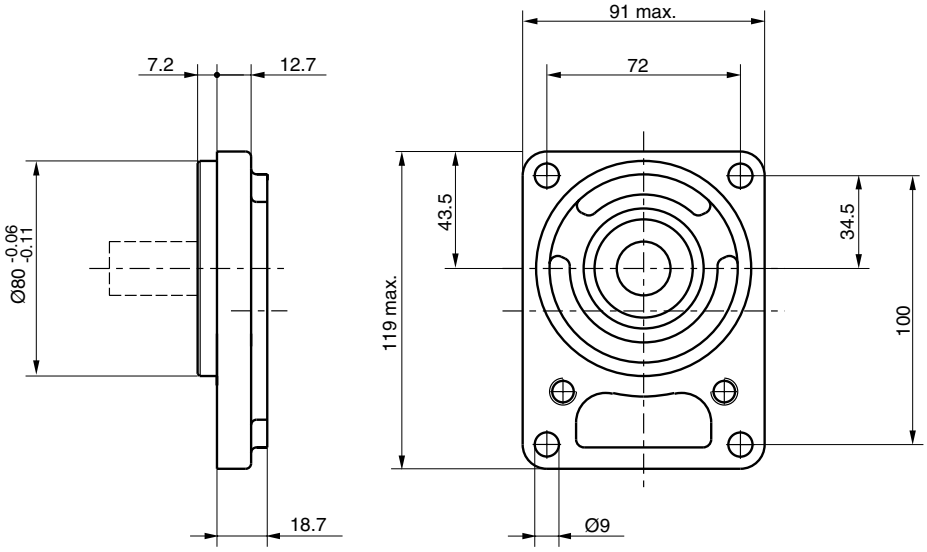

Code H2

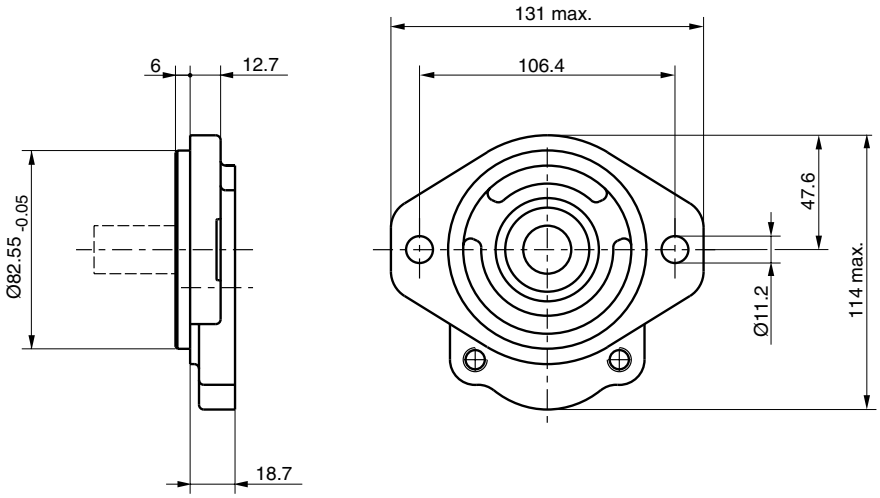

Parker Hannifin
Pump and Motor Division
Chemnitz, Germany

Tel: +45 63 12 83 00 | Email: ps@hymatik.com | www.hymatik.com | Hvidkaervej 27a, DK-5250 Odense SV, Denmark

PGP/PGM 511 Mounting Flange

Code H3

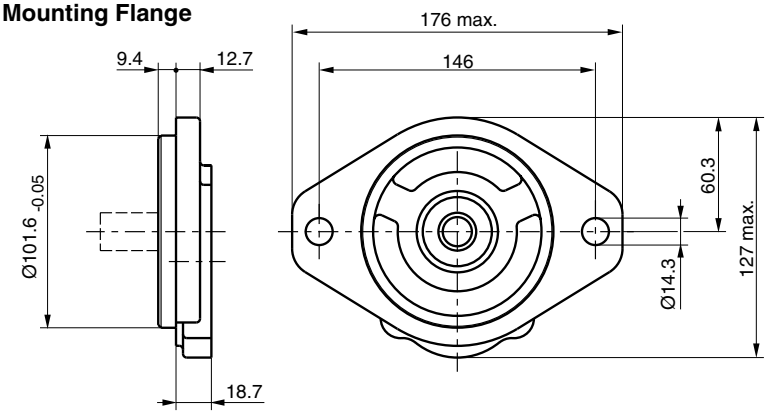

Code Q1

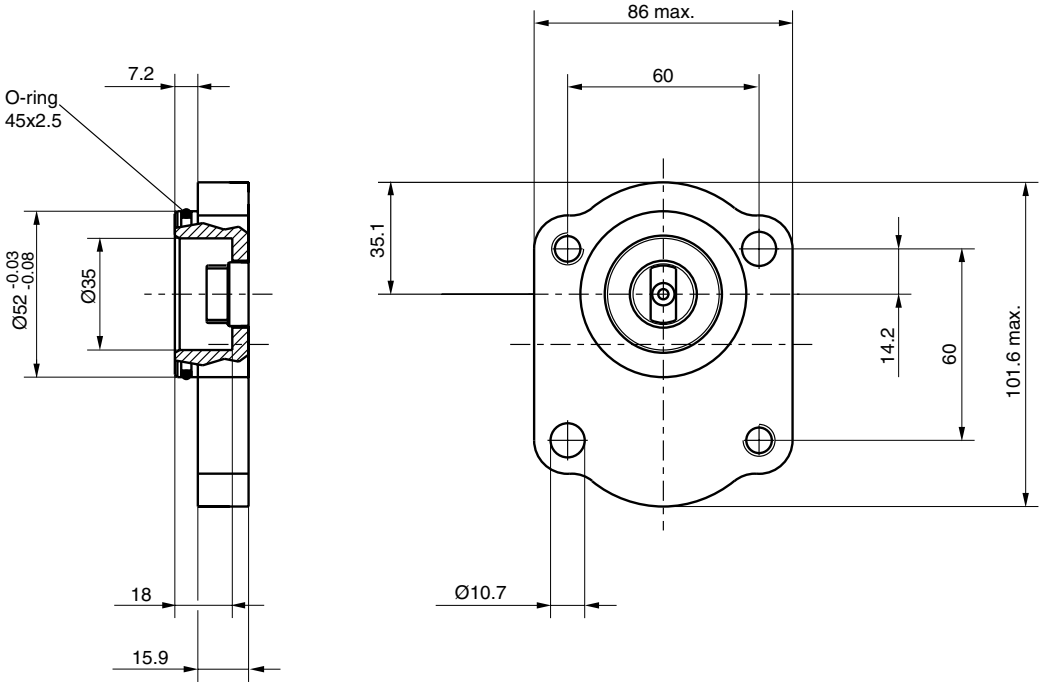

Parker Hannifin
Pump and Motor Division
Chemnitz, Germany

PGP/PGM 511 Mounting Flange

Code Q2

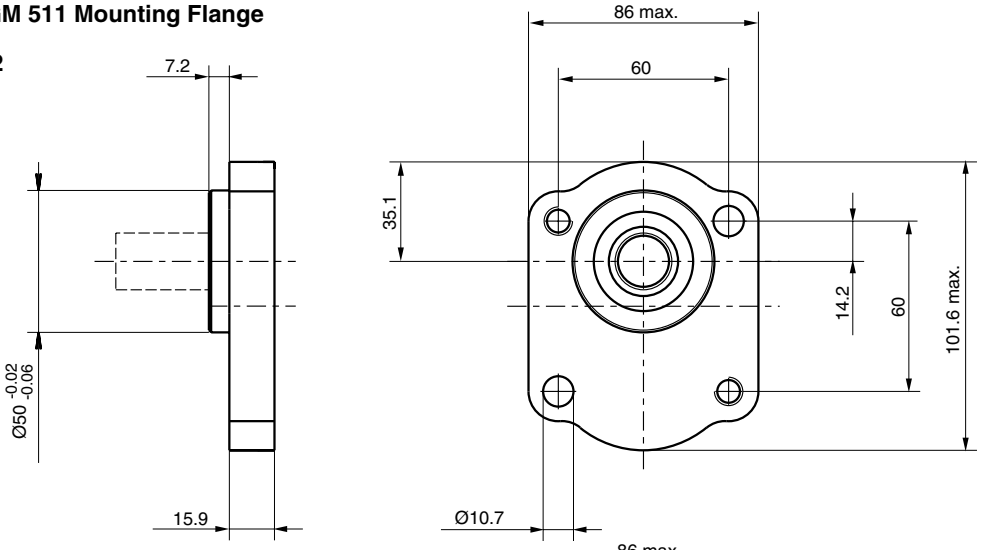

Code Q3

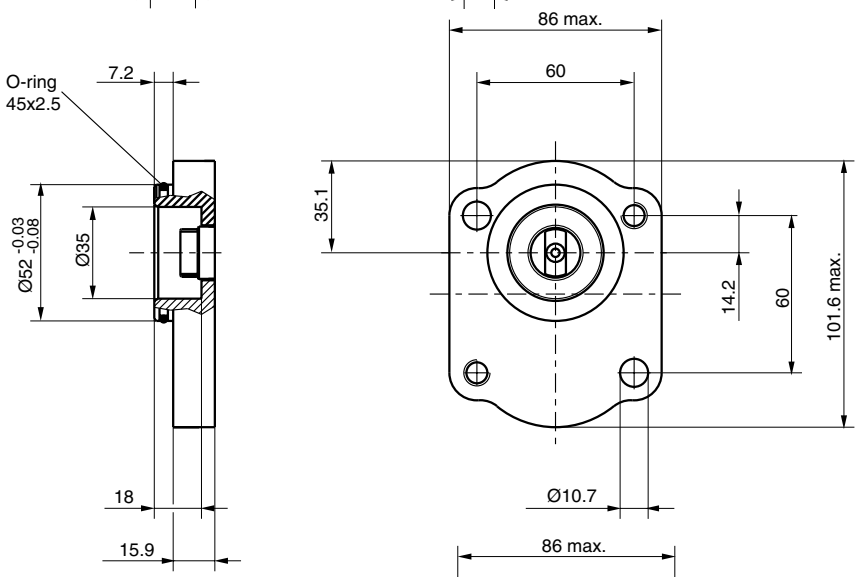

Code Q4

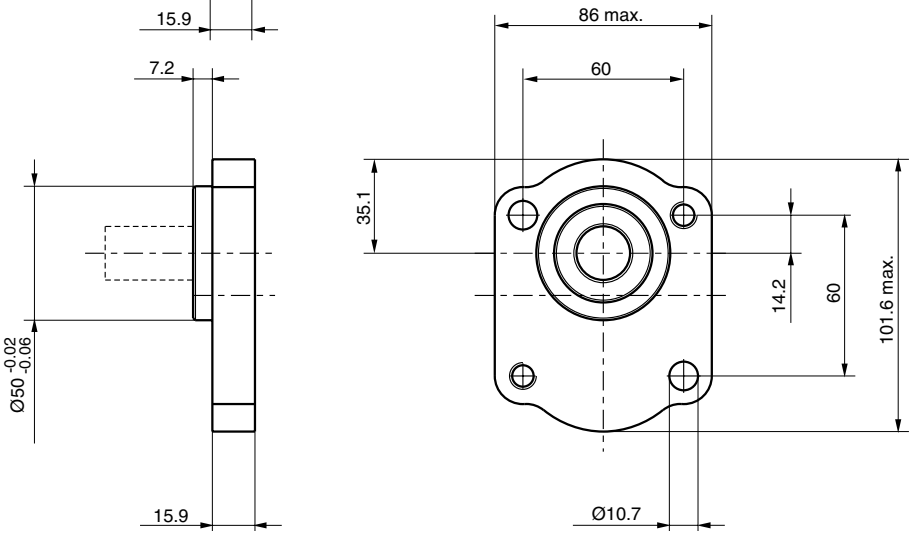

Parker Hannifin
Pump and Motor Division
Chemnitz, Germany

Tel: +45 63 12 83 00 | Email: ps@hymatik.com | www.hymatik.com | Hvidkaervej 27a, DK-5250 Odense SV, Denmark

PGP/PGM 511 Mounting Flange

Code F4

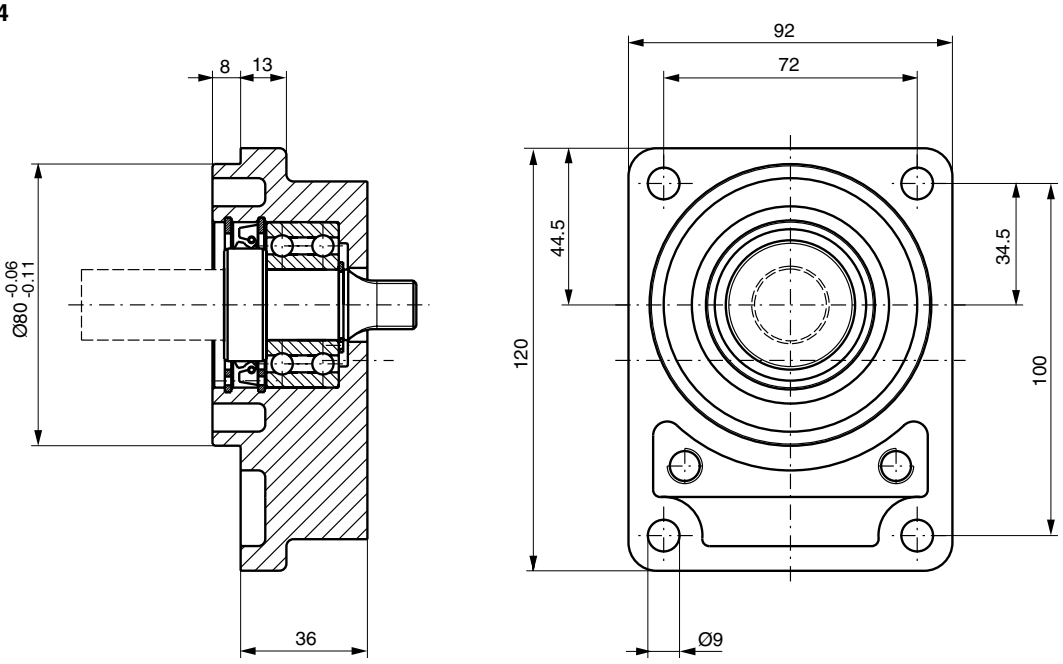

Code C3

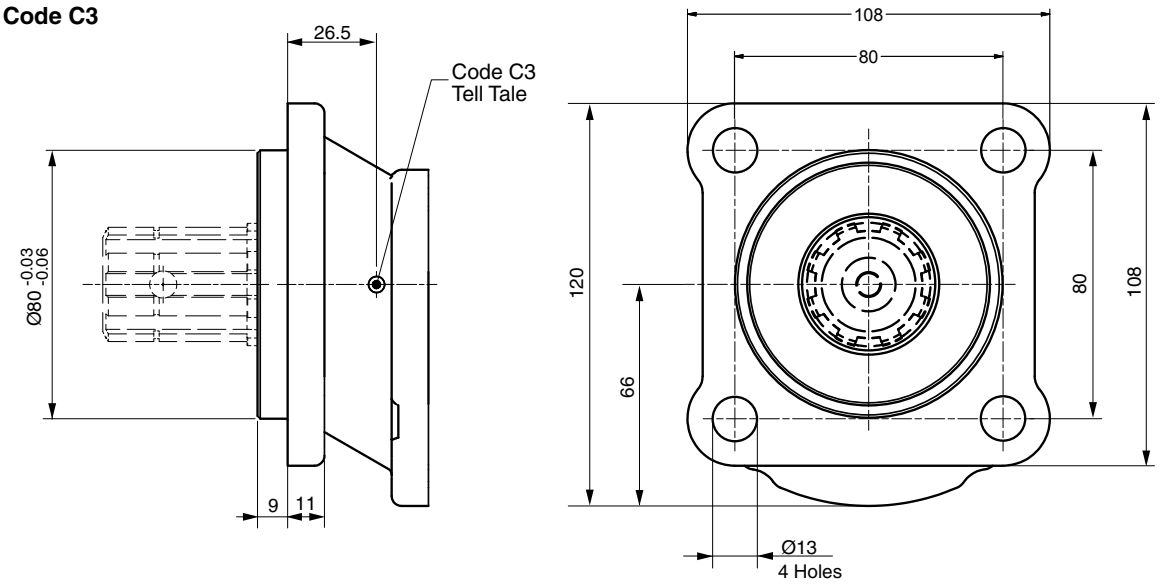

Tel: +45 63 12 83 00 | Email: ps@hymatik.com | www.hymatik.com | Hvidkaervej 27a, DK-5250 Odense SV, Denmark

Outboard Bearing PGP-PGM 511

Bearing loads for code F4

Units subject to axial or radial loads, for instance drive with V-belts or gear wheels, must be specified with an outboard bearing.

The diagrams below show the maximum axial or radial loads that can be tolerated referred to a bearing life of L_H = 1000 h.

F_r is reduced by 0,7 F_a when axial loading is applied.

Outboard Bearing Code F4

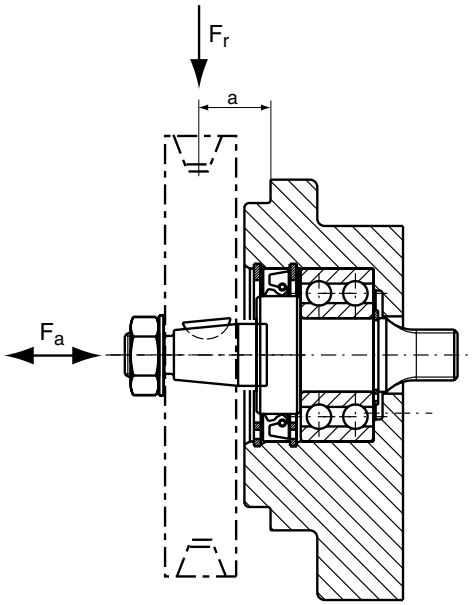

Shaft load for outboard bearings PGP/PGM 511

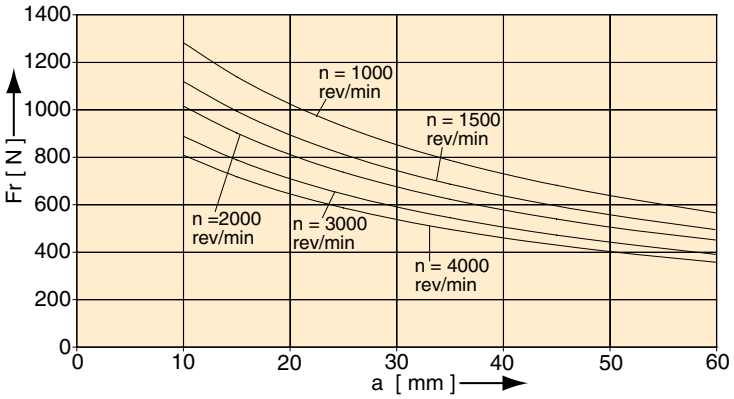

Parker Hannifin
Pump and Motor Division
Chemnitz, Germany

Tel: +45 63 12 83 00 | Email: ps@hymatik.com | www.hymatik.com | Hvidkaervej 27a, DK-5250 Odense SV, Denmark

PGP/PGM 511 Porting

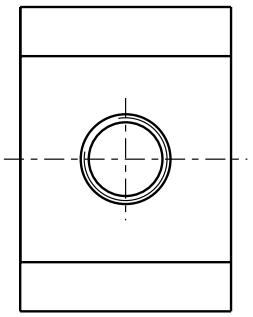

Code E
British Standard Pipe

Code G
Metric straight thread

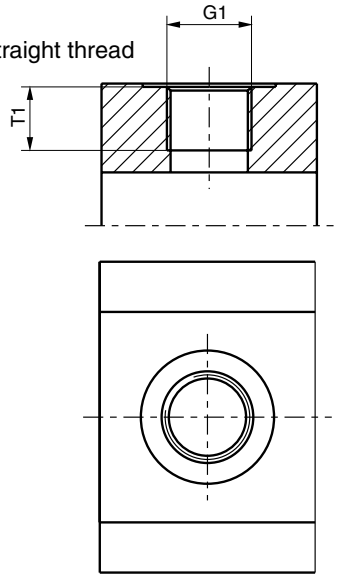

Code D
SAE straight thread

Code L
4-Bolt flange

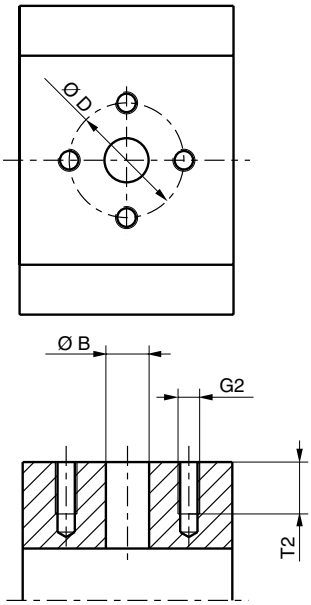

PGP/PGM 511

Code	G1	T1
	Thread	Dimensions
D2	9/16-18 UNF	12.7
D3	3/4-16 UNF	14.3
D4	7/8-14 UNF	16.7
D5	1 1/16-12 UN	19.0
D6	1 5/16-12 UN	19.0
D7	1 5/8-12 UN	19.0
E2	3/8-19 BSP	12.0
E3	1/2-14 BSP	14.0
E4	5/8-14 BSP	16.3
E5	3/4-16 BSP	16.0
E6	1-11 BSP	18.0
E7	1 1/4-11 BSP	20.0
G1	M 14x1.5	12.0
G3	M 18x1.5	12.0
G4	M 22x1.5	14.0
G5	M 26x1.5	16.0
G7	M 30x1.5	12.0

Tel: +45 63 12 83 00 | Email: ps@hymatik.com | www.hymatik.com | Hvidkaervej 27a, DK-5250 Odense SV, Denmark

PGP/PGM 511 Porting

Code N
SAE Split flange

Code P
SAE Split flange
metric thread

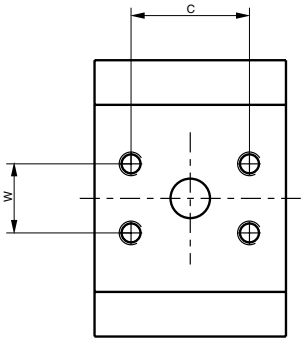

Code J
European flange

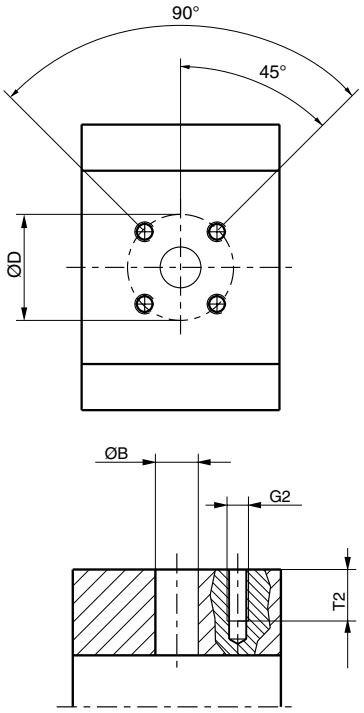

PGP/PGM 511

Code	G2	∅ B	∅ D	S	C	W	T2
	Thread	Dimensions					
J3	M6	8.0	30.0				12.0
J4	M6	12.0	30.0				12.0
J5	M6	15.0	35.0				12.5
J6	M8	15.0	40.0				15.0
J7	M6	20.0	40.0				13.0
J8	M8	18.0	55.0				15.0
J9	M8	26.0	55.0				15.0
K1	5/16-18 UNF	19.0		30.48			15.0
K2	M8	19.0		30.48			15.0
K3	M6	19.0		32.00			13.0
K4	M6	16.0		25.15			13.0
L1	M6	13.0	30.0				13.0
L2	M8	19.0	40.0				15.0
N1	5/16-18 UNC	12.7			38.10	17.48	15.0
N2	3/8-16 UNC	19.0			47.63	22.23	14.0
N3	3/8-16 UNC	25.4			52.37	26.19	20.6
N4	7/16-14 UNC	31.8			58.72	30.17	20.6
P1	M8	12.7			38.10	17.48	15.0
P2	M10	19.0			47.63	22.23	20.6
P3	M10	25.4			52.37	26.19	21.4
P4	M10	31.8			58.72	30.17	20.6

Tel: +45 63 12 83 00 | Email: ps@hymatik.com | www.hymatik.com | Hvidkaervej 27a, DK-5250 Odense SV, Denmark

PGP/PGM 511 Drive Shaft

Code A1

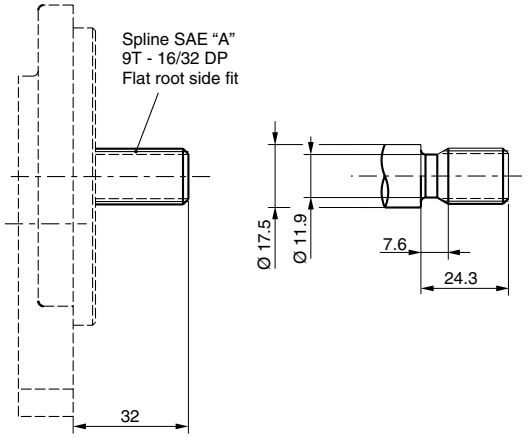

Code C1

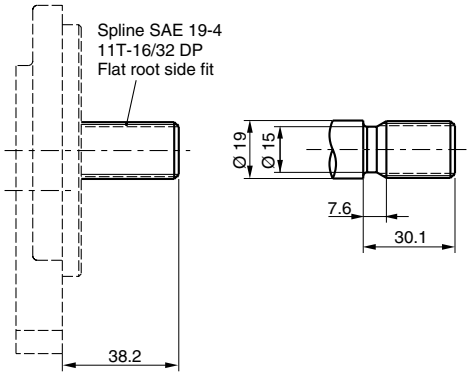

Code K1

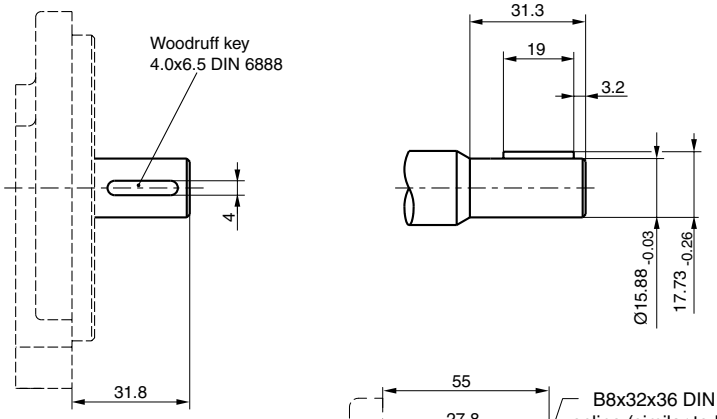

Code F5

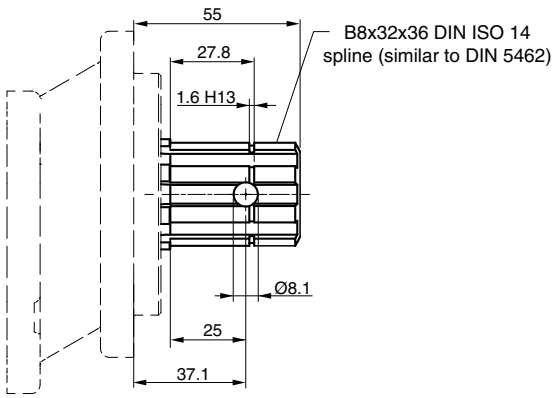

Tel: +45 63 12 83 00 | Email: ps@hymatik.com | www.hymatik.com | Hvidkaervej 27a, DK-5250 Odense SV, Denmark

PGP/PGM 511 Drive Shaft

Code L6

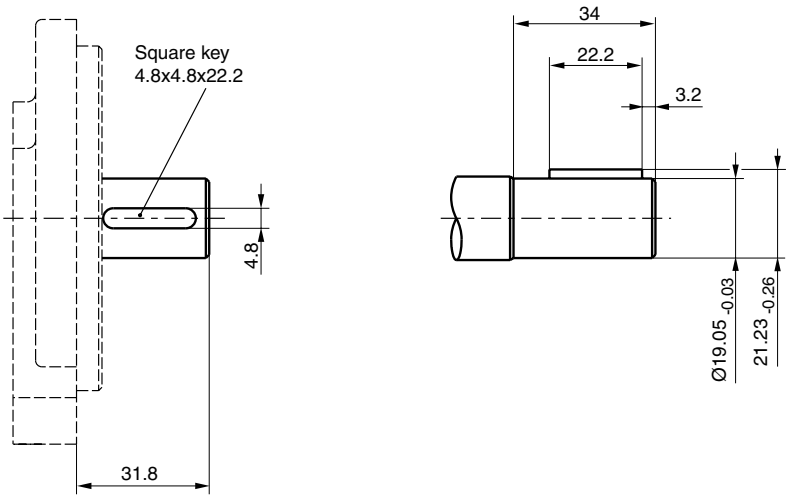

Code S1

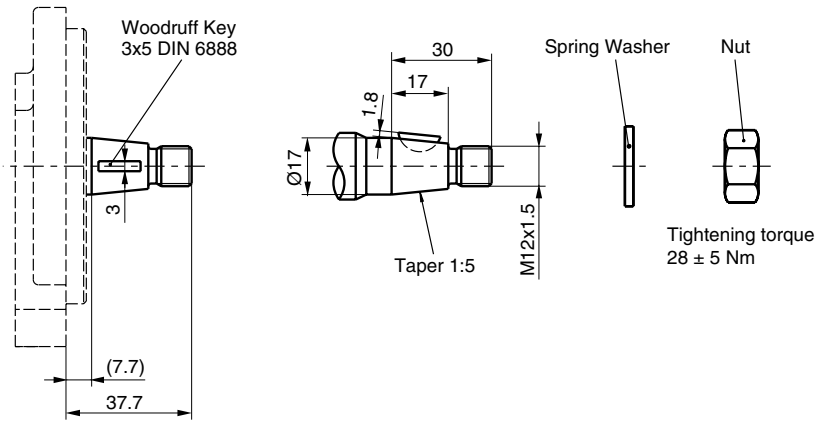

Code S2

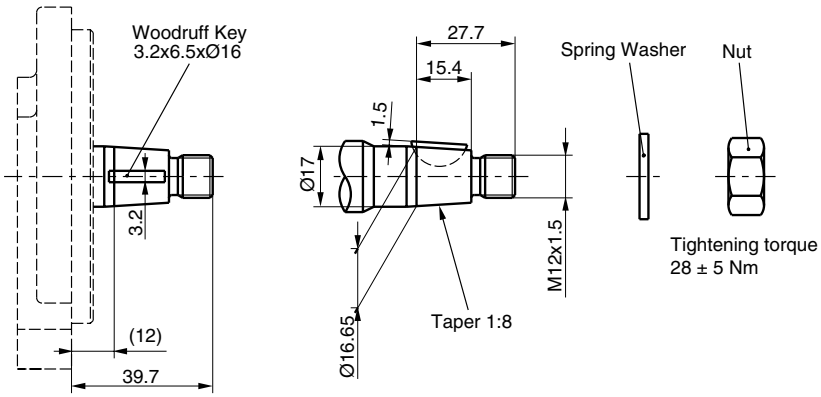

Parker Hannifin
Pump and Motor Division
Chemnitz, Germany

Tel: +45 63 12 83 00 | Email: ps@hymatik.com | www.hymatik.com | Hvidkaervej 27a, DK-5250 Odense SV, Denmark

PGP/PGM 511 Drive Shaft

Code S8

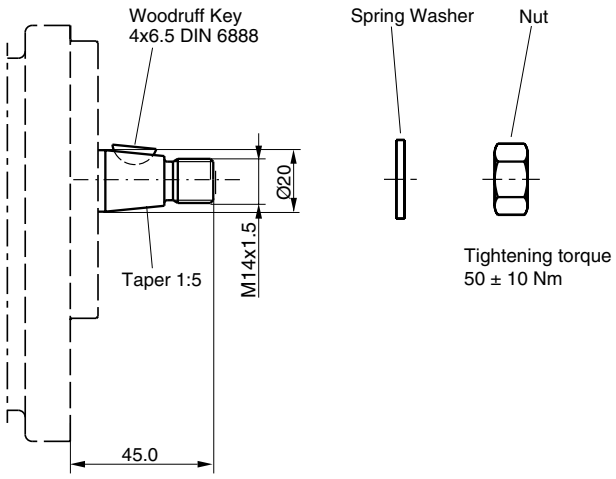

Code V5

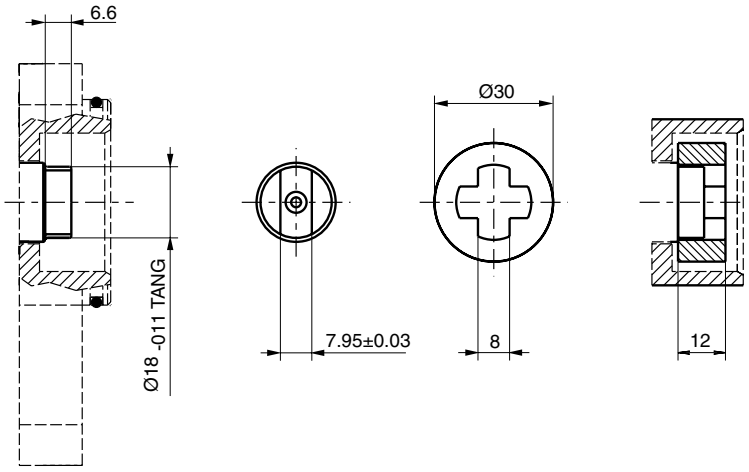

PGP/PGM 511 - Shaft Load Capacity

Code	Description		Torque Rating [Nm]
A1	9T, 16/32DP, 32L, SAE"A"	spline	86
C1	11T, 16/32DP, 38.2L, SAE 19-4	spline	166
F5	B8x32x36 DIN ISO 14 (similar to DIN 5462)	spline	166
K1	Ø15.88, 4.0 KEY, no thread, 32L, SAE"A"	parallel	75
L6	Ø19.05, 4.8 KEY, no thread, 32L, SAE 19-1	parallel	145
S1	Ø17.0, 7.7L, 3.0 KEY, M12x1.5	taper 1:5	193
S2	Ø16.65, 12.0L, 3.2 KEY, M12x1.5	taper 1:8	198
S8	Ø20, 9.4L, 4.0 KEY, M14x1.5	taper 1:5	110
V5	8x6.5 short shaft	tang drive	60
	Multiple pump connection shaft		110

$$\text{Torque [Nm]} = \frac{\text{Displacement [cm}^3\text{/rev]} \times \text{Pressure [bar]}}{57.2}$$

PGP 517 Specification - Standard Displacements

Pump Displacement	Code	0160	0190	0230	0280	0330	0380	0440	0520	0700
	cm³/rev	16.0	19.0	23.0	28.0	33.0	38.0	44.0	52.0	70.0
Max. Continuous Pressure	bar	250	250	250	250	250	250	220	200	160
Minimum Speed @ Max. outlet pressure	rpm	500	500	500	500	500	500	500	500	500
Maximum Speed @ 0 Inlet & Max. outlet pressure	rpm	3400	3300	3300	3100	3000	3000	2800	2700	2400
Pump Input Power @ Max. Pressure and 1500 rpm	kW	11	13.1	15.8	19.3	22.7	26.1	27	28.6	31.2
Dimension "L"	mm	70.3	73.3	77.4	82.4	87.5	92.5	98.6	106.7	124.9
Approximate Weight [1]	kg	8.00	8.12	8.29	8.50	8.70	8.91	9.16	9.49	10.24

[1] Single pump with Flange H3 and Port end cover B1

Single Unit PGP 517

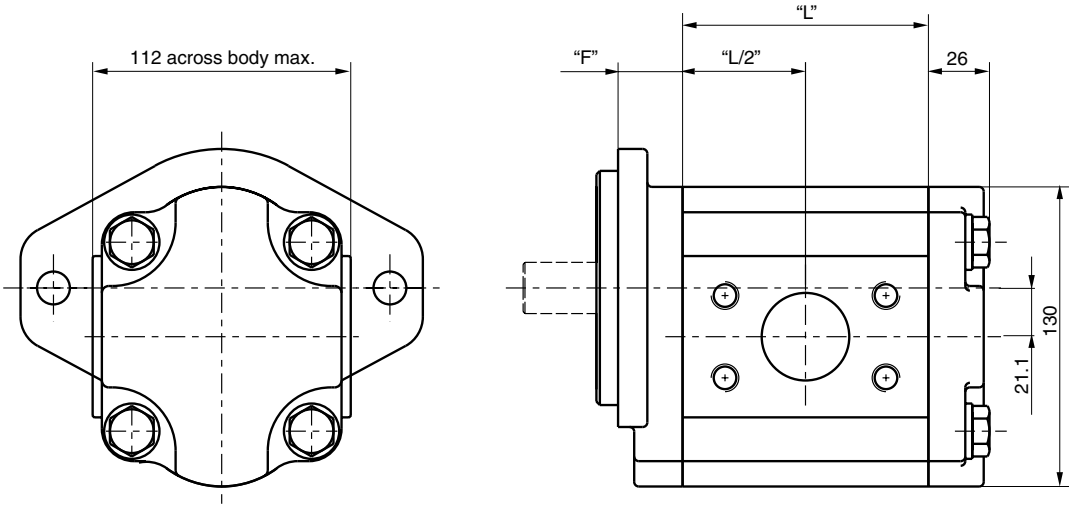

Dimension "L" see table above
Dimension "F" see flanges on page 43
Dimension Shafts see pages 46 to 48

Parker Hannifin
Pump and Motor Division
Chemnitz, Germany

Tel: +45 63 12 83 00 | Email: ps@hymatik.com | www.hymatik.com | Hvidkaervej 27a, DK-5250 Odense SV, Denmark

Single Unit PGP 517 with rear ports

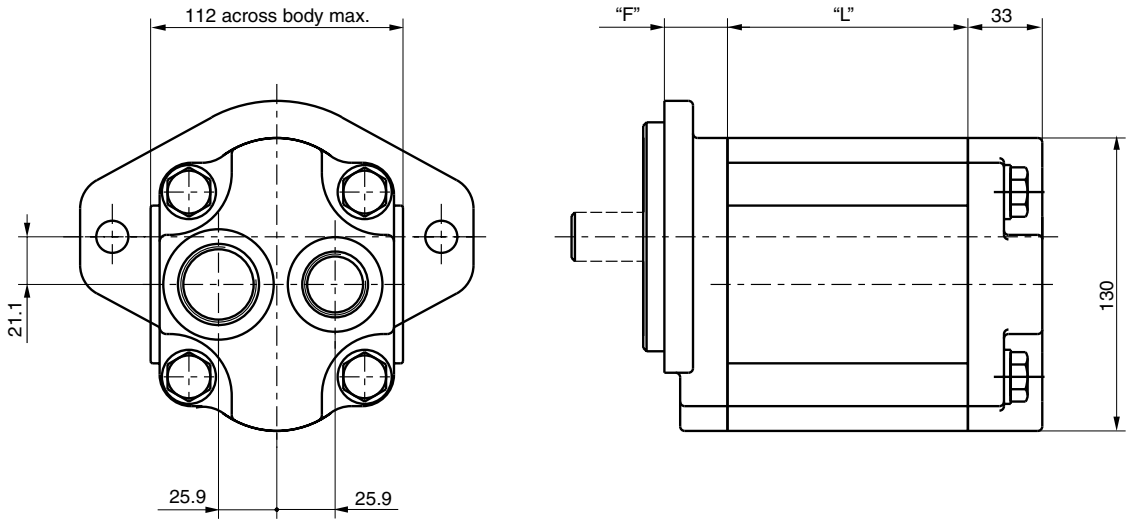

Dimension "L" see table on page 41
Dimension "F" see flanges on page 43
Dimension Shafts see pages 46 to 48

Tandem Unit PGP 517

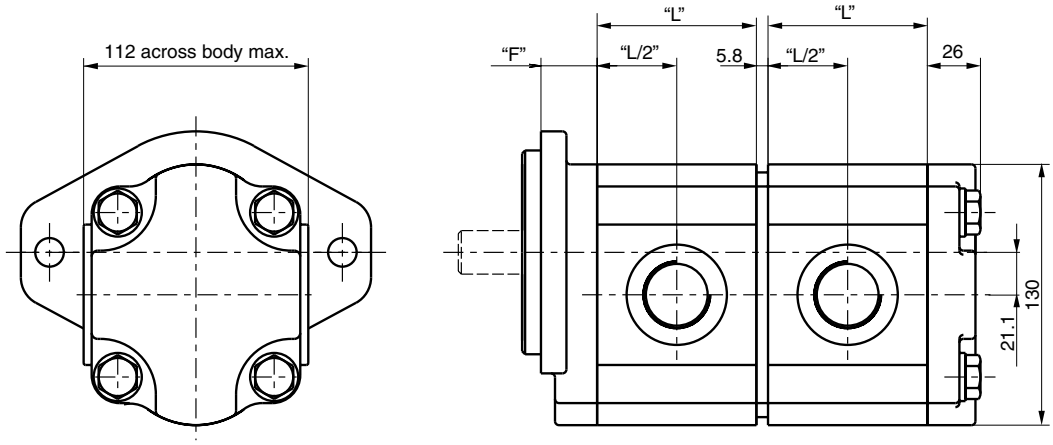

Dimension "L" see table on page 41
Dimension "F" see flanges on page 43
Dimension Shafts see pages 46 to 48

Tel: +45 63 12 83 00 | Email: ps@hymatik.com | www.hymatik.com | Hvidkaervej 27a, DK-5250 Odense SV, Denmark

PGP 517 Mounting Flange

Code D7

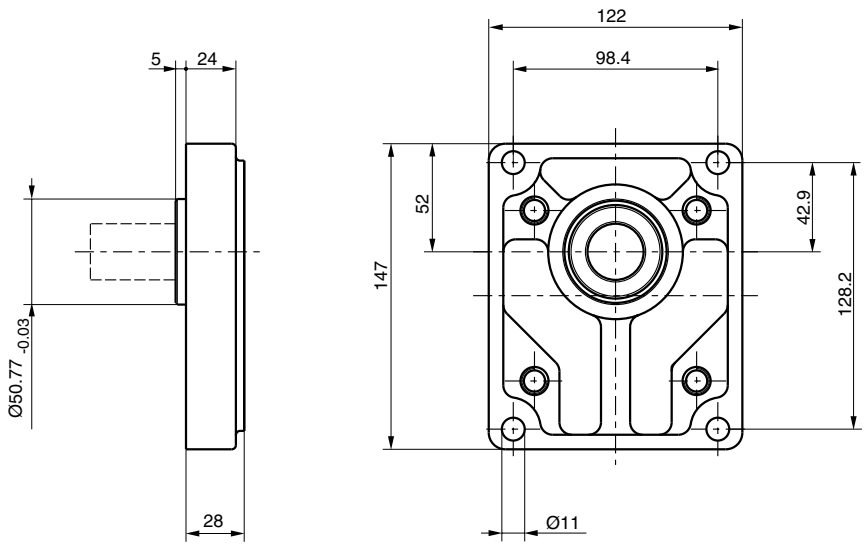

Code H3/K6

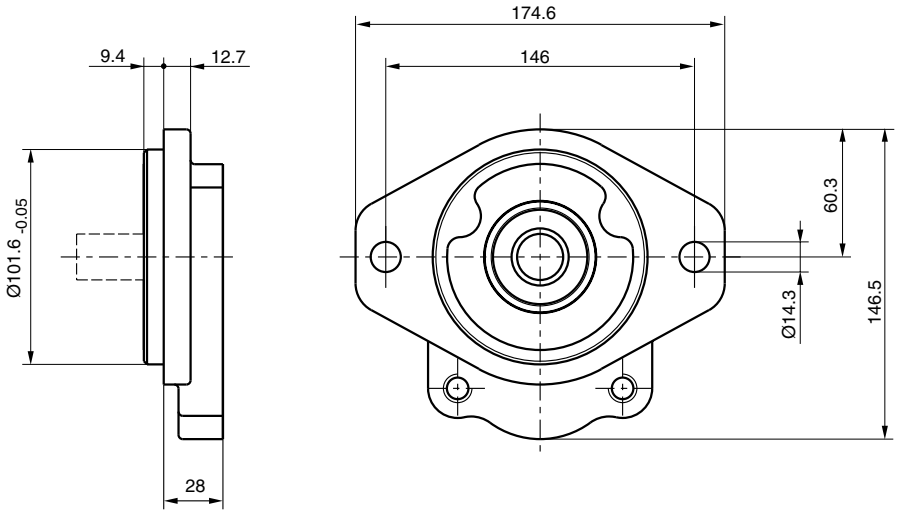

Parker Hannifin
Pump and Motor Division
Chemnitz, Germany

Tel: +45 63 12 83 00 | Email: ps@hymatik.com | www.hymatik.com | Hvidkaervej 27a, DK-5250 Odense SV, Denmark

PGP 517 Porting

Code E
British Standard Pipe

Code G
Metric straight thread

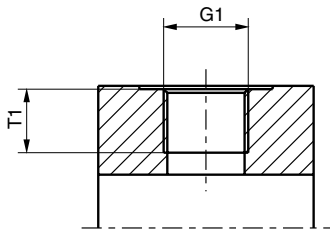

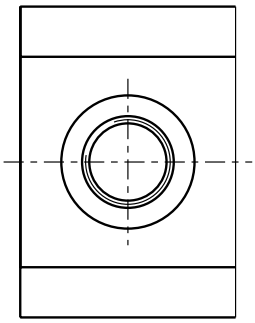

Code D
SAE straight thread

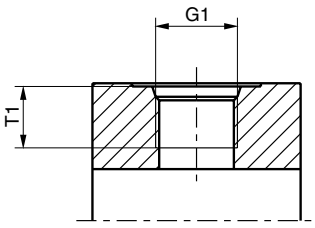

PGP 517

Code	G1	T1
	Thread	Dimensions
D2	9/16-18 UNF	12.7
D3	3/4-16 UNF	14.3
D4	7/8-14 UNF	16.7
D5	1 1/16-12 UN	19.0
D6	1 5/16-12 UN	19.0
D7	1 5/8-12 UN	19.0
D8	1 7/8-12 UN	19.0
E2	3/8-19 BSP	12.0
E3	1/2-14 BSP	14.0
E4	5/8-14 BSP	16.3
E5	3/4-16 BSP	16.0
E6	1-11 BSP	18.0
E7	1 1/4-11 BSP	20.0
E8	1 1/2-11 BSP	22.0
G4	M 22x1.5	14.0
G5	M 26x1.5	16.0
G7	M 30x1.5	12.0
G8	M 33x2	18.0
G9	M 42x2	20.0

Tel: +45 63 12 83 00 | Email: ps@hymatik.com | www.hymatik.com | Hvidkaervej 27a, DK-5250 Odense SV, Denmark

PGP 517 Porting

Code L
4-Bolt flange

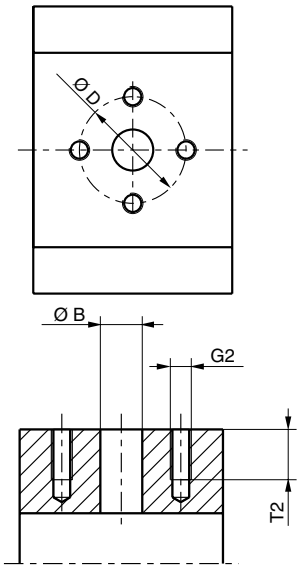

Code J
European flange

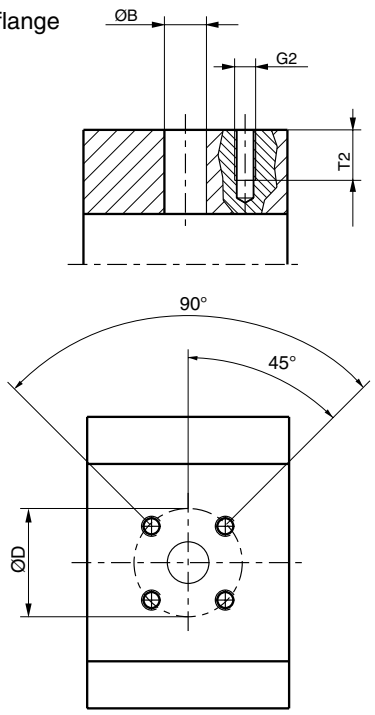

Code N
SAE split flange
Code P
SAE split flange metric thread

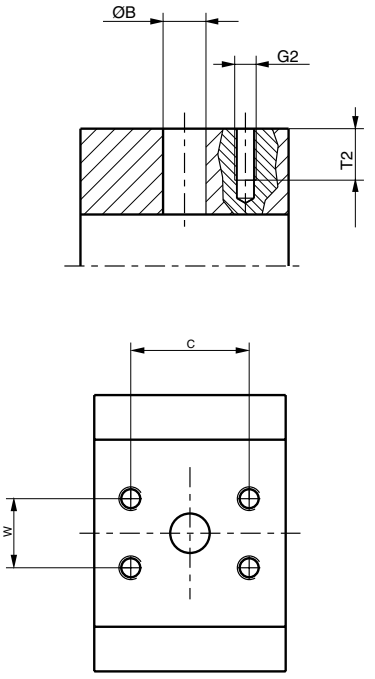

PGP 517

Code	G2	∅ B	∅ D	S	C	W	T2
	Thread	Dimensions					
J5	M6	15.0	35.0				12.5
J7	M6	20.0	40.0				13.0
J8	M8	18.0	55.0				15.0
J9	M8	26.0	55.0				15.0
L1	M6	13.0	30.0				13.0
L2	M8	19.0	40.0				15.0
L3	M10	27.0	51.0				18.0
L4	1/4-20 UNF	13.0	30.0				13.0
N1	5/16-18 UNC	12.7			38.10	17.48	15.0
N2	3/8-16 UNC	19.0			47.63	22.23	14.0
N3	3/8-16 UNC	25.4			52.37	26.19	20.6
N4	7/16-14 UNC	31.8			58.72	30.17	20.6
N5	1/2-13 UNC	38.1			69.82	35.71	20.6
P1	M8	12.7			38.10	17.48	15.0
P2	M10	19.0			47.63	22.23	20.6
P3	M10	25.4			52.37	26.19	21.4
P4	M10	31.8			58.72	30.17	20.6
P5	M12	38.1			69.82	35.71	20.6

Tel: +45 63 12 83 00 | Email: ps@hymatik.com | www.hymatik.com | Hvidkaervej 27a, DK-5250 Odense SV, Denmark

PGP 517 Drive Shaft

Code D1

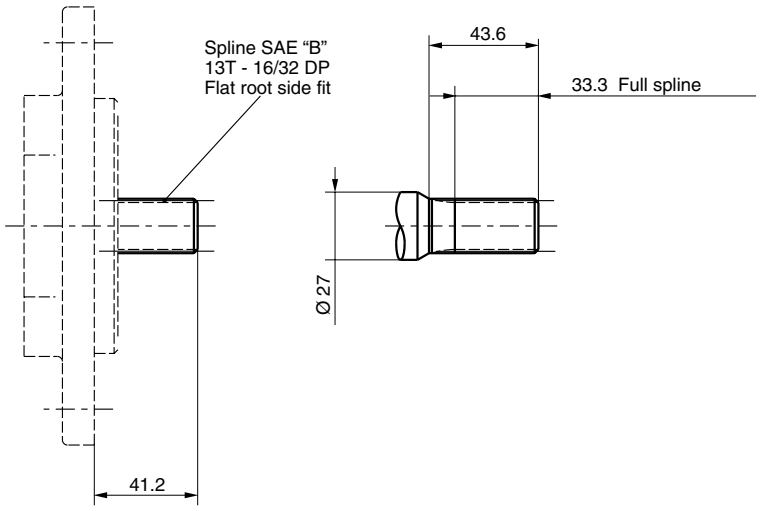

Code E1

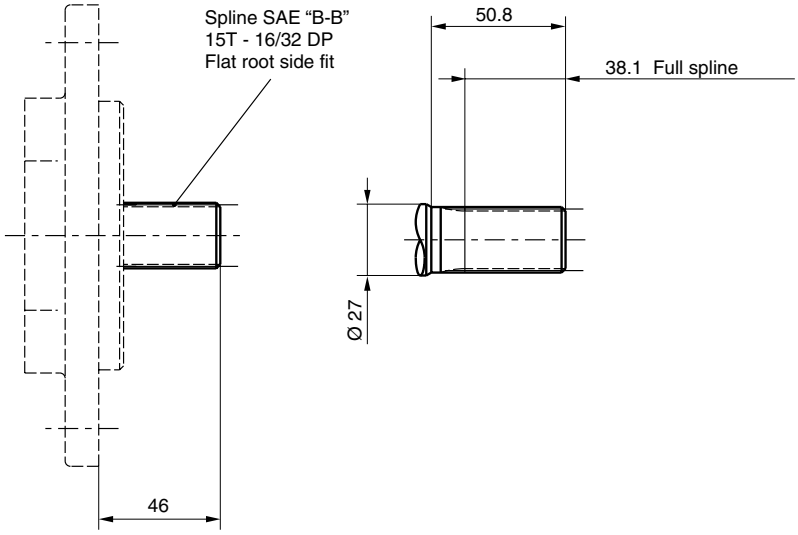

Tel: +45 63 12 83 00 | Email: ps@hymatik.com | www.hymatik.com | Hvidkaervej 27a, DK-5250 Odense SV, Denmark

PGP 517 Drive Shaft

Code M1

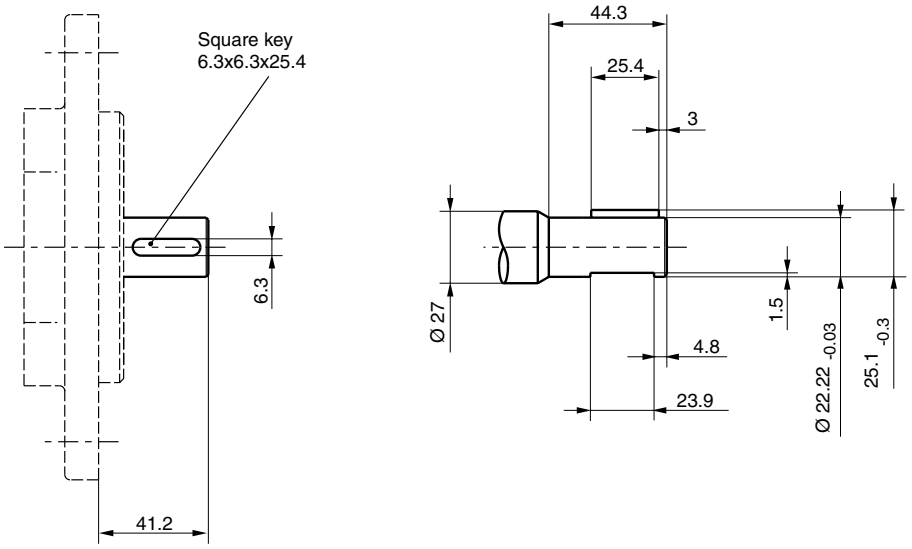

Code M2

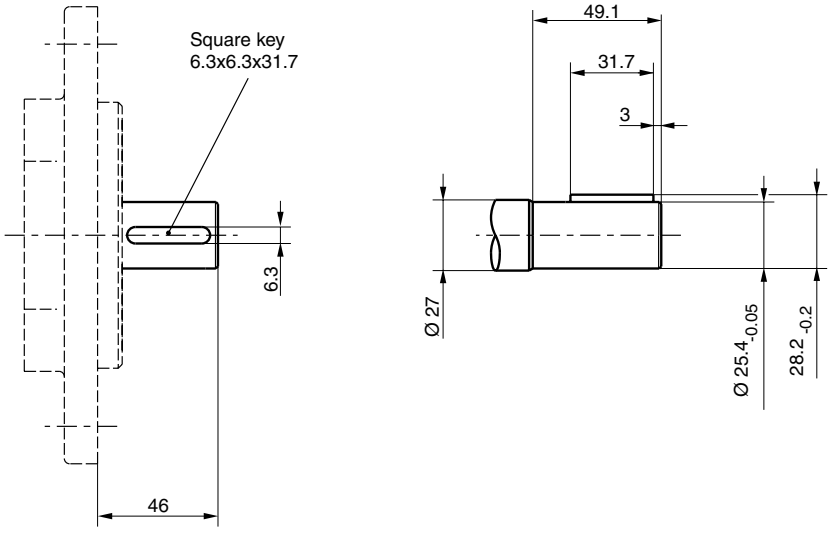

Parker Hannifin
Pump and Motor Division
Chemnitz, Germany

Tel: +45 63 12 83 00 | Email: ps@hymatik.com | www.hymatik.com | Hvidkaervej 27a, DK-5250 Odense SV, Denmark

PGP 517 Drive Shaft

Code T1

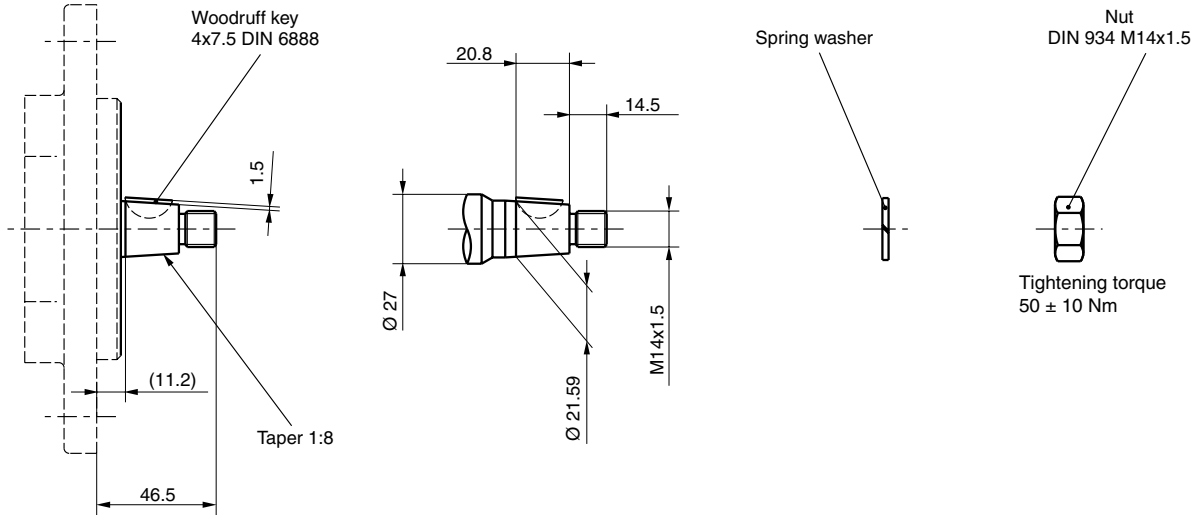

PGP/PGM 517 - Shaft Load Capacity

Code	Description		Torque Rating [Nm]
D1	13T,16/32DP, 41.2L, SAE“B“	spline	345
E1	15T, 16/32DP, 46L, SAE“B-B“	spline	530
M1	Ø22.2, 6.3 KEY, no thd, 41.2L, SAE“B“	parallel	251
M2	Ø25.4, 6.3 KEY, no thd, 46L, SAE“B-B“	parallel	395
T1	Ø21.59,11.2 L,4.0 KEY, M14x1.5	taper 1:8	250
	Multiple pump connection shaft		228

$$\text{Torque [Nm]} = \frac{\text{Displacement [cm}^3\text{/rev] x Pressure [bar]}}{57.2}$$

Tel: +45 63 12 83 00 | Email: ps@hymatik.com | www.hymatik.com | Hvidkaervej 27a, DK-5250 Odense SV, Denmark

Pressure depending on speed

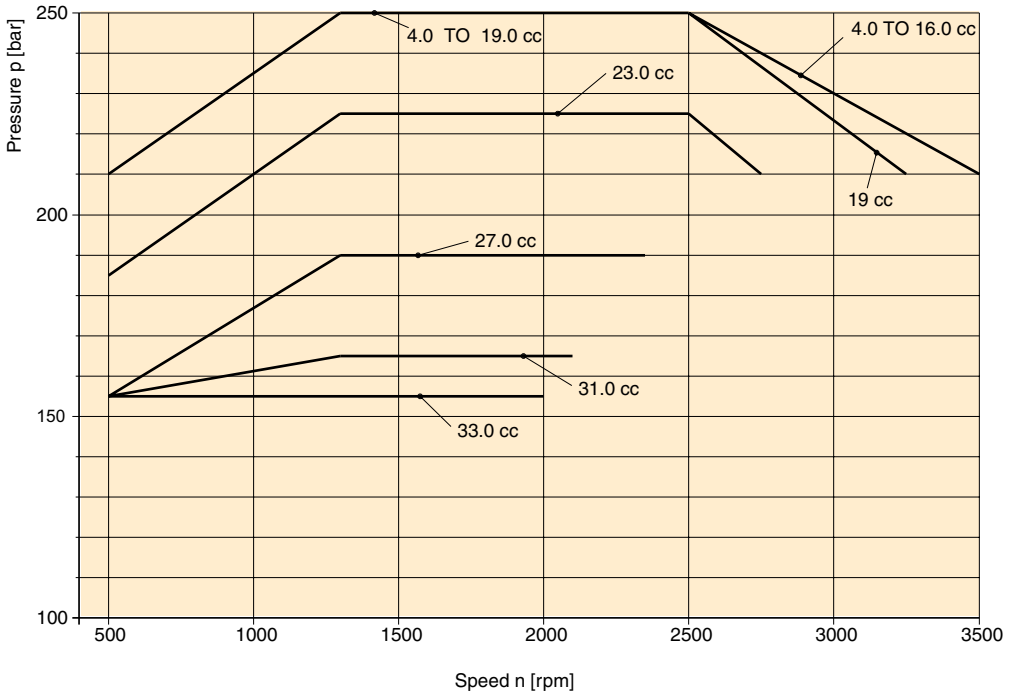

Pressure depending on viscosity

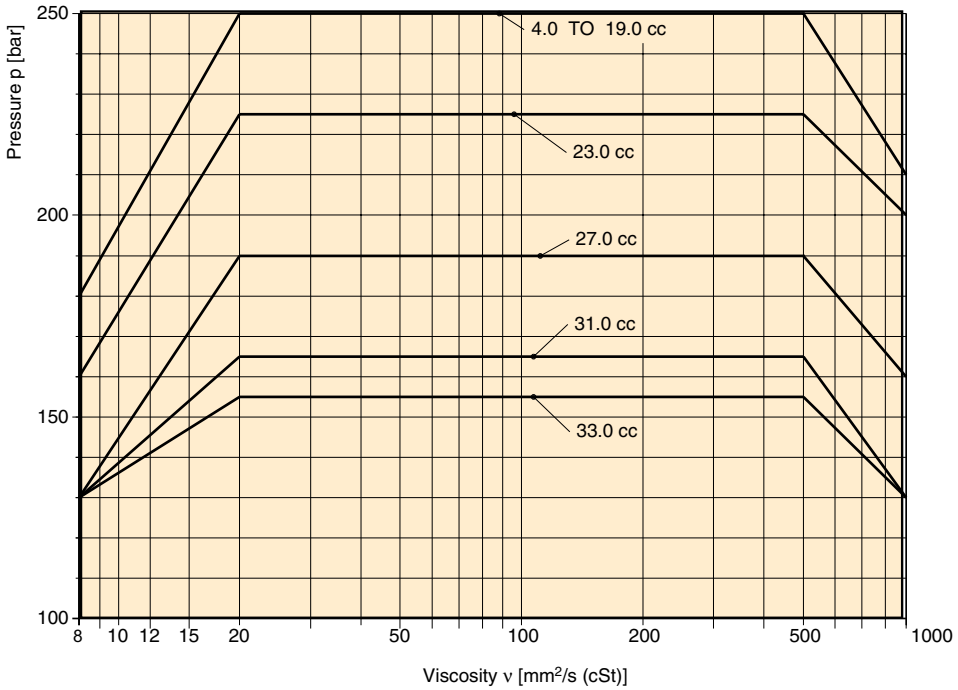

Parker Hannifin
Pump and Motor Division
Chemnitz, Germany

Tel: +45 63 12 83 00 | Email: ps@hymatik.com | www.hymatik.com | Hvidkaervej 27a, DK-5250 Odense SV, Denmark

Pressure depending on speed

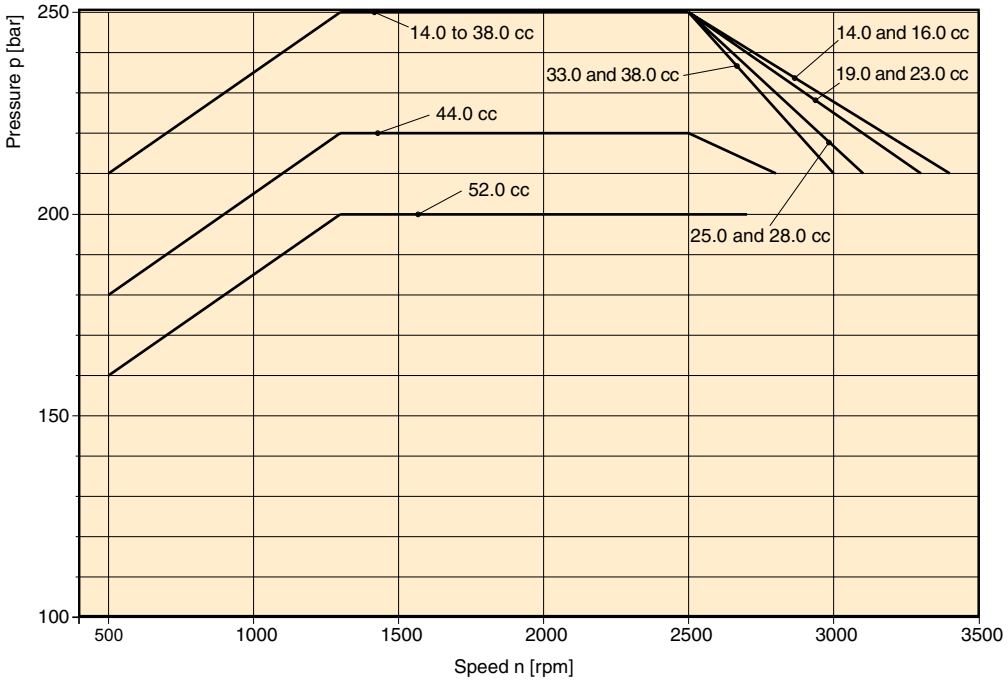

Pressure depending on viscosity

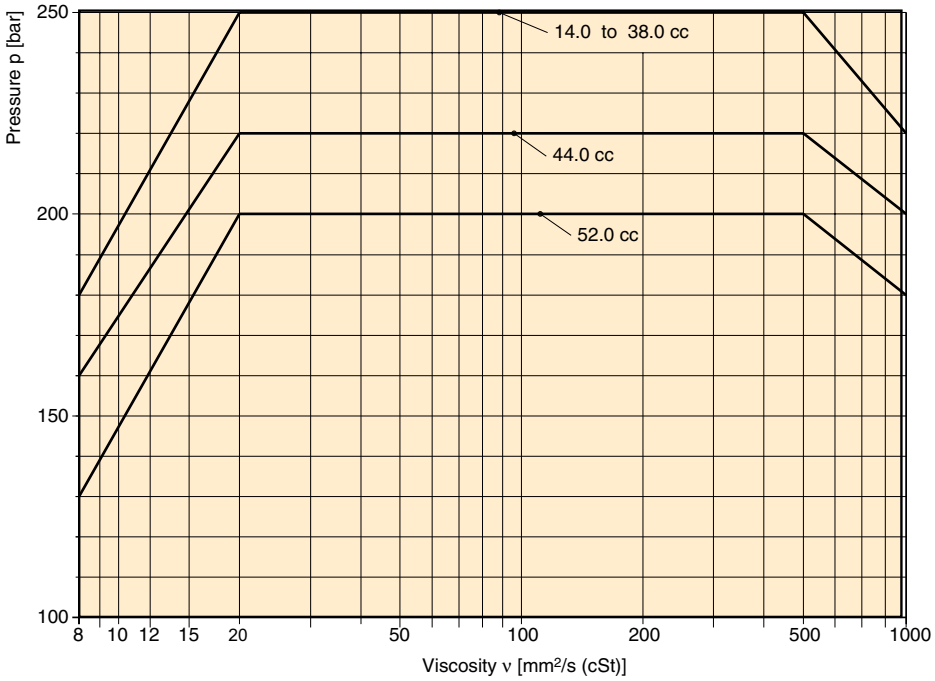

Parker Hannifin
Pump and Motor Division
Chemnitz, Germany

Tel: +45 63 12 83 00 | Email: ps@hymatik.com | www.hymatik.com | Hvidkaervej 27a, DK-5250 Odense SV, Denmark

Over many years Parker Hydraulics has supplied gear pumps and motors for mobile and industrial markets worldwide, especially for materials handling, commercial grass cutting and construction equipment applications. Many Parker pumps and motors have been developed and tested for the specific needs of these industries.

Parker's defined strategy to provide engineered solutions, coupled with an award winning flexible manufacturing system, has resulted in a wide range of SAE/DIN/European and other special options being available as standard.

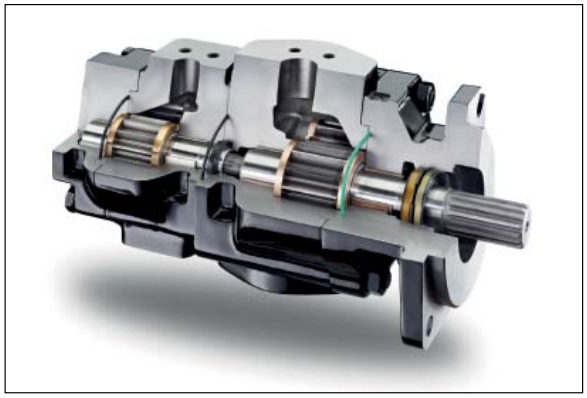

Features

- Patented interlocking body design
- 12 tooth gears, bronze balance plates
- Tandem, triple and cross-frame pumps available
- Common inlets available for tandem and triple pumps
- Continuous operating pressures up to 310 bar
- Production run-in available to suite OEM application conditions and to provide optimized volumetric efficiencies
- Pressure balanced design for high efficiency
- Reduced system noise levels compared to earlier models
- High power through-drive capability
- Wide range of integral valves for power steering, power brakes, fan drivers and implement hydraulics
- Load sense and solenoid operated unloading valves

Characteristics

Pump type	Heavy-duty, cast iron, external gear.
Mounting	SAE, rectangular, thru-bolt standard specials on request.
Ports	SAE and metric split flanges and others
Shaft style	SAE splined, keyed, tapered, cylindrical tang drive, specials on request
Speed	500 - 3500 rpm, see Technical Data
Theor. displacement	See Technical Data
Drive	Drive direct with flexible coupling is recommended.
Axial / Radial load	Units subject to axial or radial loads must be specified with an outboard bearing.
Inlet pressure	Operating range 0.8 to 2 bar abs. Min. inlet pressure 0.5 bar abs. Short time without load. Consultation is recommended.
Outlet pressure	See Technical Data
Flow velocity	See Nomograph for Pipe Velocity
Hydraulic fluids	Hydraulic oil HLP, DIN 51524-2
Fluid temperature	Range of operating temperature -15 to +80 °C. Max. permissible operating pressure dependent on fluid temperature. Temperature for cold start -20 to -15 °C at speed ≤ 1500 rpm. Max. permissible operating pressure dependent on fluid temperature.

Fluid viscosity	Range of operating viscosity 8 to 1000 mm²/s. Max. permissible operating pressure dependent on viscosity. Viscosity range for cold start 1000 to 2000 mm²/s at operating pressure p≤10 bar and speed n ≤1500 rpm.
Range of ambient temperature	-40 °C to +70 °C
Filtration	According to ISO 4406 Cl. 19/17/13
Direction of rotation (looking at the drive shaft)	Clockwise, counter-clockwise or double. Attention! Drive pump only in indicated direction of rotation.
Multiple pump assemblies	• Available in two or three section configuration. • Max. shaft load must be conform to the limitations shown in the shaft loading rating table in this catalogue. • Max. load is determined by adding the torque values for each pumping section that will be simultaneously loaded.
Separate or common inlet capability	Separate inlet configuration: • Each gear housing has individual inlet and outlet ports. Common inlet configuration: • Two gear sets share a common inlet.

Tel: +45 63 12 83 00 | Email: ps@hymatik.com | www.hymatik.com | Hvidkaervej 27a, DK-5250 Odense SV, Denmark

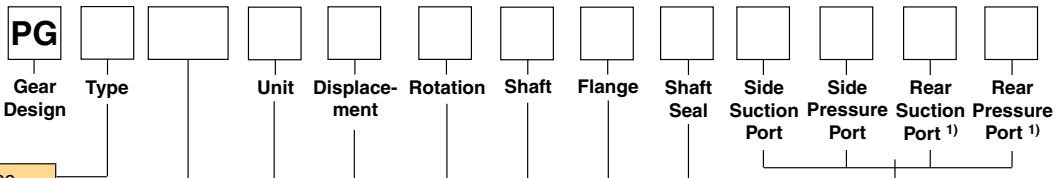

Code	Type
P	Pump
M	Motor

Design	
Pump and Motor	**620**
Pump	**625**

Code	Unit	
	Pump	Motor
A	Single unit	Standard Motor without checks
B	Multiple unit	Standard Motor with two checks
C	—	Standard Motor w. one anti cavitation check (ACC)

Code	Shaft Seal
X	No seal
N	NBR
V	FPM, FKM
M	Double NBR
W	Double FPM

Displacement Code	Design **620** ccm	Design **625** ccm
0160	16	–
0190	19	–
0230	23	–
0260	26	–
0290	29	–
0330	33	–
0360	36	36
0370	37	–
0410	41	41
0440	44	–
0450	–	45
0500	50	50
0520	52	–

Code	Rotation
C	Clockwise
A	Counter clockwise
B	bi-directional

Code	Shaft
D1	13T, 16/32DP, 41.2L, SAE "B" spline
E1	15T, 16/32DP, 46L, SAE "B-B" spline
E4[4)]	14T, 12/24 DP, 55.6L, SAE "C" spline
M3	Ø25.4, 6.3 Key, M8, 46L, SAE "B-B", parallel
T1	Ø21.59, 11.2L, 4.0 Key, M14x1.5, taper 1:8
T2[5)]	Ø25.0, 12L, 5.0 Key, M16x1.5, taper 1:5

4) (via drive adaptor)
5) Non standard, on request only

Not all variances of ordering codes can be offered. Please check available part numbers first.
For not yet implemented part numbers or special requests please contact Parker Hannifin.

1) Only coded for the last section.

2) Only for motors

											3)
Motor Drain Option [2]	Drain Position [2]	Section Connection		Unit	Displacement	Shaft Seal	Side Suction Port	Side Pressure Port	Rear Suction Port [1]	Rear Pressure Port [1]	

Design	
Pump and Motor	**620**
Pump	**625**

Code	Section Connection
S	Separate inlets
C	Common inlets

Code	Drain Position
2[6]	Drain on bottom
3[6]	Drain on top
4	Rear drain

[6] Non standard, on request only

Code	Motor Drain Option
B1	no drain
C	9/16-18 UNF thread
G	1/4 BSP thread

Code	Flange
A3	89.8x89.8 - Ø101.6, SAE "B" 4 bolt square
A4	114.5x114.5 - Ø127, SAE "C" 4 bolt square
D7	98.4x128.2 - Ø50.77 rectangular
H2	106.4 - Ø82.55 SAE "A" 2 bolt flange
H3	146.1 - Ø101.6 SAE "B" 2 bolt flange
L3	89.8x89.8 - 101.6 SAE “B” 2/4 bolt flange

Code	Port Options
B1	No ports
D3[6]	3/4 - 16 UNF thread
D4[6]	7/8 - 14 UNF thread
D5[6]	1 1/16 - 12 UN thread
D6[6]*	1 5/16 - 12 UN thread
D7[6]*	1 5/8 - 12 UN thread
D8[6]*	1 7/8 - 12 UN thread
E3	1/2 - 14 BSP thread
E4	5/8 - 14 BSP thread
E5	3/4 - 16 BSP thread
E6*	1 - 11 BSP thread
E7*	1 1/4 - 11 BSP thread
E8*	1 1/2 - 11 BSP thread
J5*	15 mm - Ø35 mm - M6 square
J7*	20 mm - Ø40 mm - M6 square
J8*	18 mm - Ø55 mm - M8 square
J9*	26 mm - Ø55 mm - M8 square
L1*	13 mm-Ø30 mm-M6 diamond
L2*	19 mm-Ø40 mm-M8 diamond
L3*	27 mm-Ø51 mm-M10 diamond

Code	Port Options
S2[6]*	3/4"-3/8-16 UNC SAE Split Flange
S3[6]*	1"-3/8-16 UNC SAE Split Flange
S4[6]*	1 1/4"-7/16-14 UNC SAE Split Flange
S5[6]*	1 1/2"-1/2-13 UNC SAE Split Flange
S6[6]*	2"-1/2-13 UNC SAE Split Flange
T2*	19.0 mm - M10 3/4" Metric Split Flange
T3*	25.4 mm - M10 1" Metric Split Flange
T4*	31.8 mm - M10 1 1/4" Metric Split Flange
T5*	38.1 mm - M12 1 1/2" Metric Split Flange
T6*	50.8 mm - M12 2" Metric Split Flange

[6] Non standard, on request only

*) Not usable for rear ports

[3] For further "B" triple unit repeat
displacement,
shaft seal between sections,
side suction port,
side pressure port,
rear suction port,
rear pressure port.

Parker Hannifin
Pump and Motor Division
Chemnitz, Germany

Tel: +45 63 12 83 00 | Email: ps@hymatik.com | www.hymatik.com | Hvidkaervej 27a, DK-5250 Odense SV, Denmark

PG		640										
Gear design	Type		Unit	Dis-placement	Rotation	Shaft	Flange	Shaft seal	Side Suction Port	Side Pressure Port	Rear Suction Port [1]	Rear Pressure Port [1]

Code	Type
P	Pump
M	Motor

Code	Unit	
	Pump	Motor
A	Single unit	Standard Motor without checks
B	Multiple unit	Standard Motor with two checks
C	—	Standard Motor w. one anti cavitation check (ACC)

Displacement	
Code	ccm
0300	30.0
0350	35.0
0400	40.0
0450	45.0
0500	50.0
0550	55.0
0600	60.0
0650	65.0
0700	70.0
0750	75.0
0800	80.0
0900*	90.0
1000	100.0

*) Non standard, on request only

Code	Rotation
C	Clockwise
A	Counter clockwise
B	Bi-directional

Code	Shaft
D1	13T, 16/32DP, 41.2L, SAE ”B” spline
E1	15T, 16/32DP, 46.0L, SAE ”B-B” spline
E4	14T, 12/24DP, 55.6L, SAE ”C” spline
N1	1 1/4" Keyed SAE-C

Code	Shaft Seal
X	No seal
N	NBR
V	FPM
T	PTFE (motors only)

Code	Flange
A3	89.8x89.8 - Ø101.06, SAE "B" 4 bolt square flange
A4	114.5x114.5 - Ø127, SAE "C" 4 bolt square flange
H3	146.1 - Ø101.06 SAE "B" 2 bolt flange
K3	181.0 - Ø127 SAE ”C” 2 bolt flange

Not all variances of ordering codes can be offered. Please check available part numbers first. For not yet implemented part numbers or special requests please contact Parker Hannifin.

[1] Only coded for the last section.

[2] Only for motors

Tel: +45 63 12 83 00 | Email: ps@hymatik.com | www.hymatik.com | Hvidkaervej 27a, DK-5250 Odense SV, Denmark

B	1	B	1				640									3)
No rear ports (rear ports on request)				Motor Drain Option 2)	Drain Position 2)	Section Connection		Unit	Displacement	Shaft Seal	Side Suction Port	Side Pressure Port	Rear Suction Port 1)	Rear Pressure Port 1)		

Code	Section Connection
S	Separate inlets
C	Common inlets

Code	Drain Position
2	Drain on bottom
3	Drain on top
4	Rear drain

Code	Motor Drain Option
B1	no drain
C	9/16-18 UNF thread
G	1/4 BSP thread

Code	Port Options
B1	No ports
D5[4)]	1 1/16 - 12 UN thread
D6[4)]*	1 5/16 - 12 UN thread
D7[4)]*	1 5/8 - 12 UN thread
D8[4)]*	1 7/8 - 12 UN thread
E4	5/8 - 14 BSP thread
E5	3/4 - 16 BSP thread
E6*	1 - 11 BSP thread
E7*	1 1/4 - 11 BSP thread
E8*	1 1/2 - 11 BSP thread
J8*	18 mm - Ø55 mm - M8 square
J9*	26 mm - Ø55 mm - M8 square
L2*	19 mm-Ø40 mm-M8 diamond
L3*	27 mm-Ø51 mm-M10 diamond

Code	Port Options
S2[4)]*	3/4"-3/8-16 UNC SAE Split Flange
S3[4)]*	1"-3/8-16 UNC SAE Split Flange
S4[4)]*	1 1/4"-7/16-14 UNC SAE Split Flange
S5[4)]*	1 1/2"-1/2-13 UNC SAE Split Flange
S6[4)]*	2"-1/2-13 UNC SAE Split Flange
T2*	19.0 mm - M10 3/4" Metric Split Flange
T3*	25.4 mm - M10 1" Metric Split Flange
T4*	31.8 mm - M10 1 1/4" Metric Split Flange
T5*	38.1 mm - M12 1 1/2" Metric Split Flange
T6*	50.8 mm - M12 2" Metric Split Flange

[4)] Non standard, on request only

*) Not usable for rear ports

[3)] For further "B" triple unit repeat
displacement,
shaft seal between sections,
side suction port,
side pressure port,
rear suction port,
rear pressure port.

Parker Hannifin
Pump and Motor Division
Chemnitz, Germany

Tel: +45 63 12 83 00 | Email: ps@hymatik.com | www.hymatik.com | Hvidkaervej 27a, DK-5250 Odense SV, Denmark

PGP 620 - 16.0 CC

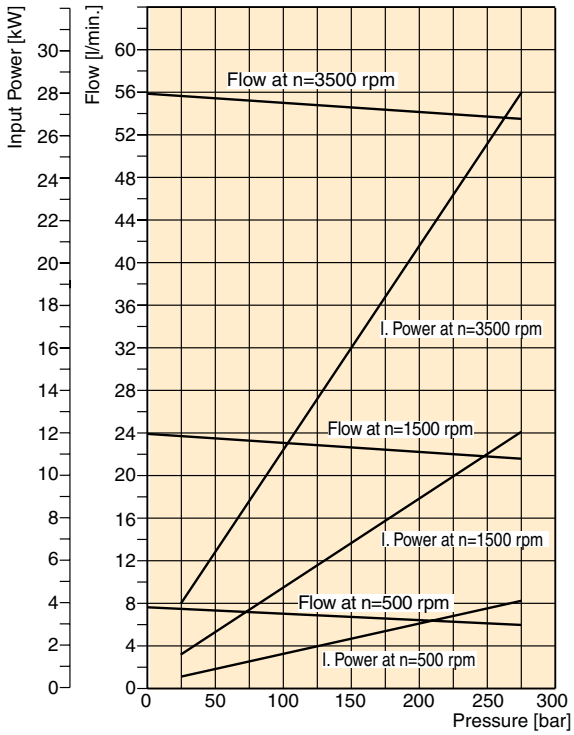

PGP 620 - 26.0 CC

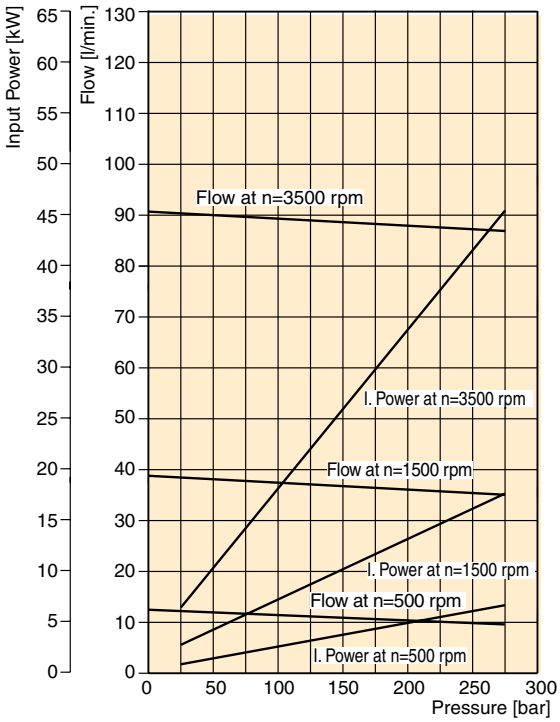

PGP 620 - 41.0 CC

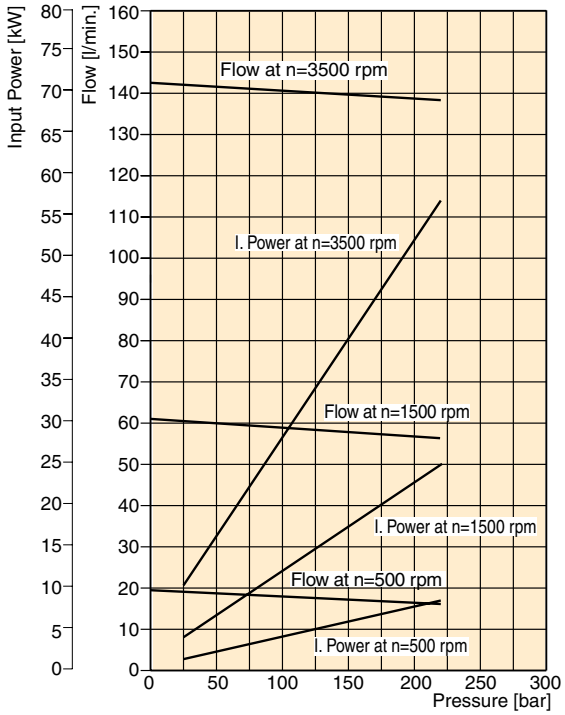

PGP 620 - 52.0 CC

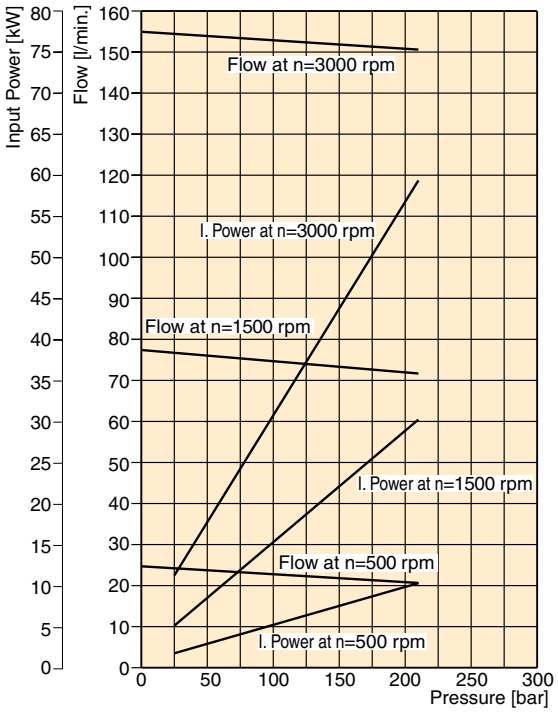

Fluid Temperature = 45± 2 °C
Viscosity = 36 mm^2/s
Inlet Pressure = 0.9 + 0.1 bar absolute

Parker Hannifin
Pump and Motor Division
Chemnitz, Germany

Tel: +45 63 12 83 00 | Email: ps@hymatik.com | www.hymatik.com | Hvidkaervej 27a, DK-5250 Odense SV, Denmark

PGP 625 - 36.0 CC

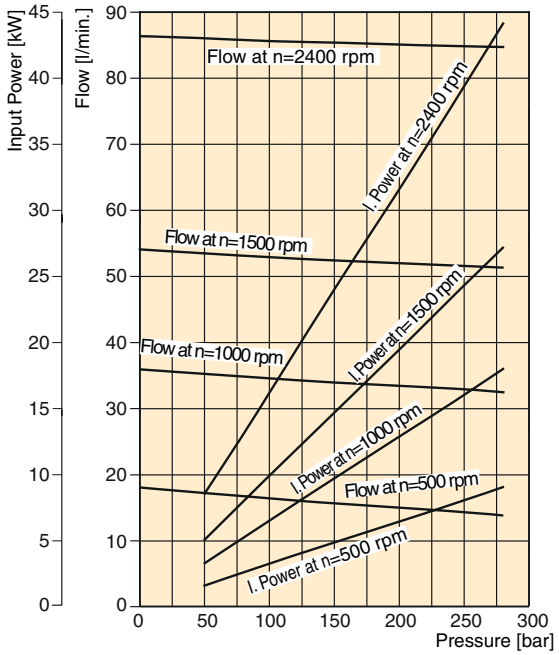

PGP 625 - 41.0 CC

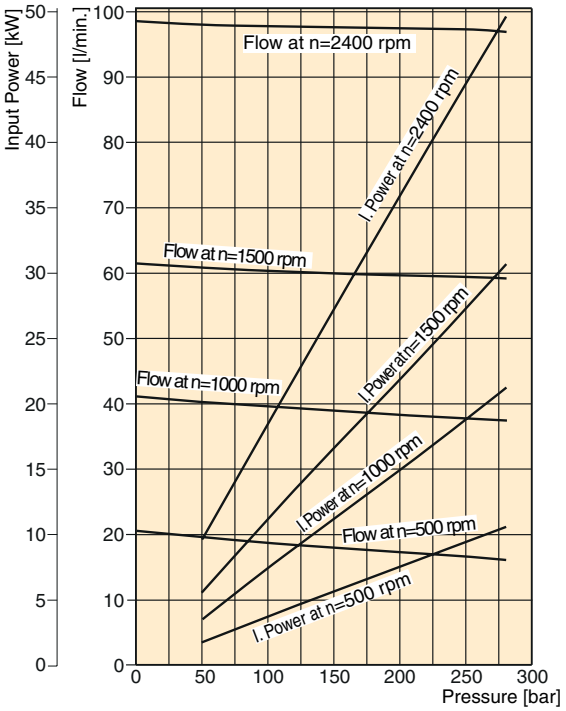

PGP 625 - 45.0 CC

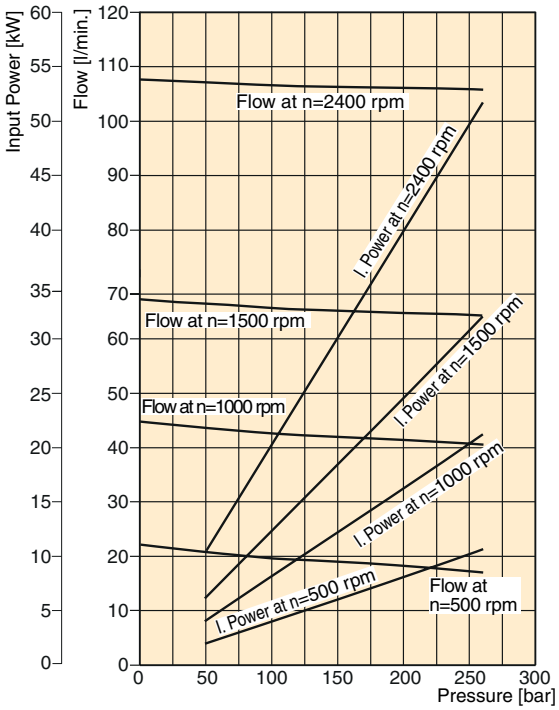

PGP 625 - 50.0 CC

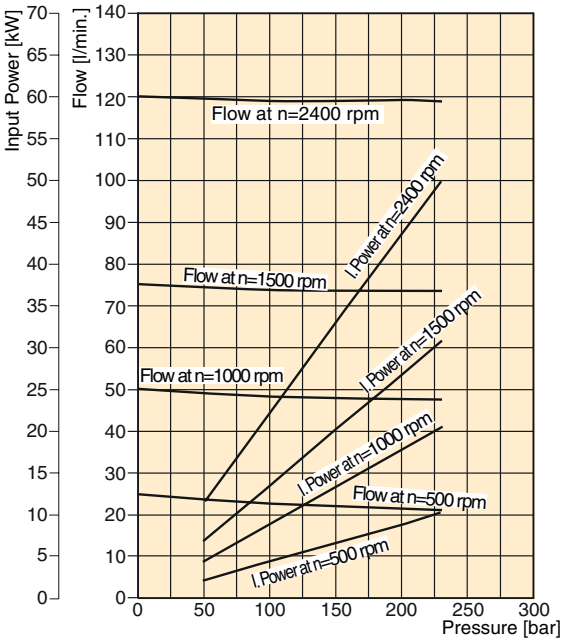

Fluid Temperature = 45± 2 °C
Viscosity = 36 mm^2/s
Inlet Pressure = 0.9 + 0.1 bar absolute

Parker Hannifin
Pump and Motor Division
Chemnitz, Germany

Tel: +45 63 12 83 00 | Email: ps@hymatik.com | www.hymatik.com | Hvidkaervej 27a, DK-5250 Odense SV, Denmark

PGP640 - 30.0 CC

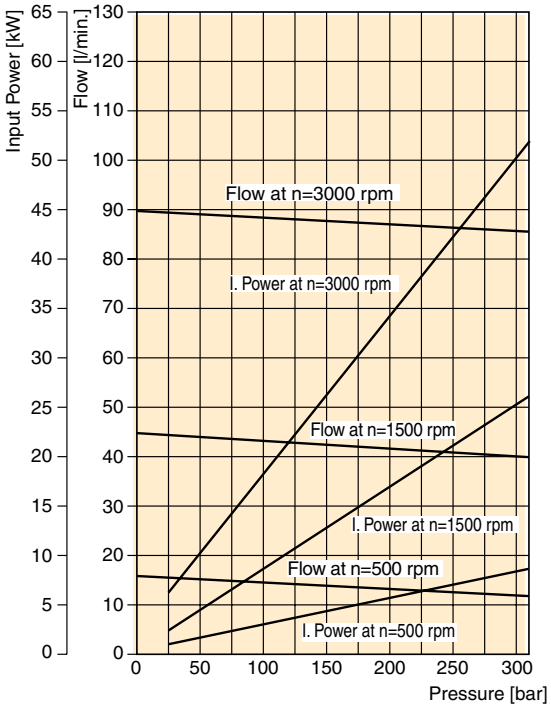

PGP640 - 50.0 CC

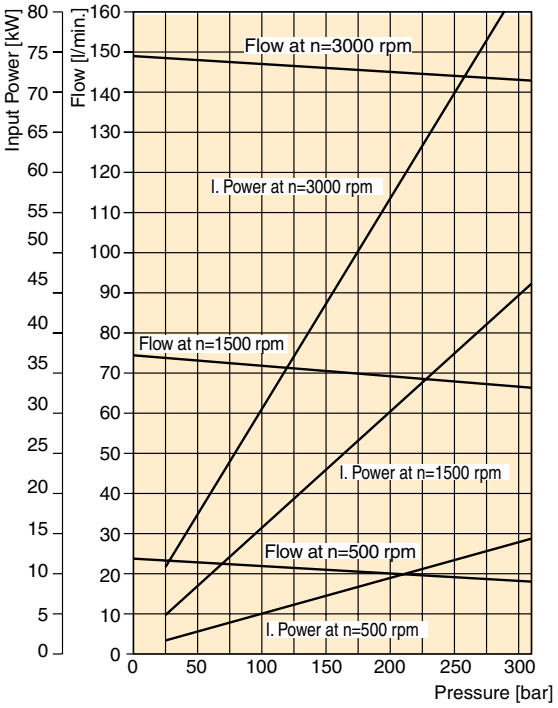

PGP640 - 65.0 CC

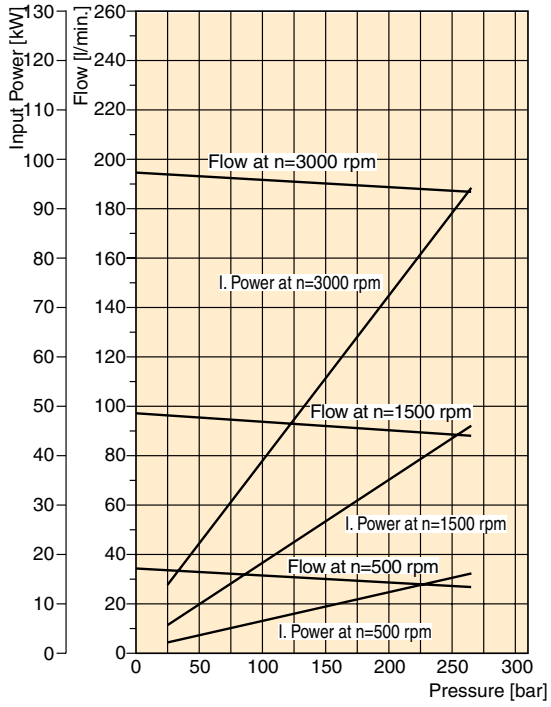

PGP640 - 80.0 CC

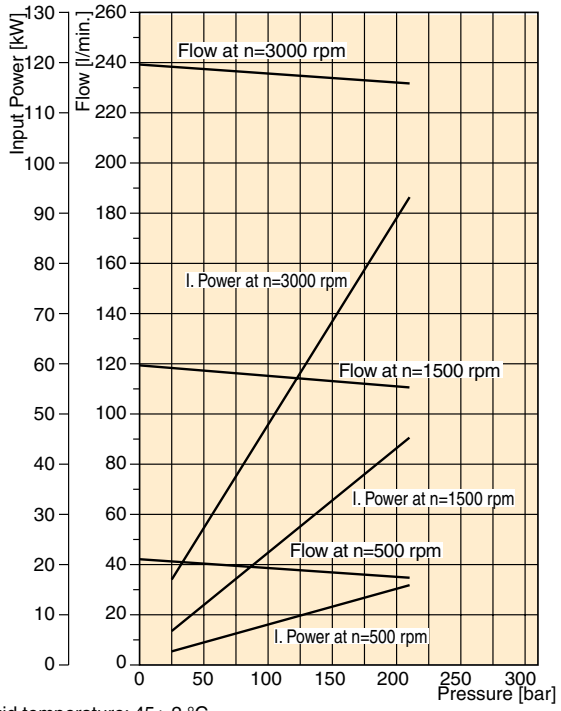

Fluid temperature: 45± 2 °C
Viscosity: 36 mm^2/s
Inlet pressure: 0.9 + 0.1 bar absolute

Parker Hannifin
Pump and Motor Division
Chemnitz, Germany

Tel: +45 63 12 83 00 | Email: ps@hymatik.com | www.hymatik.com | Hvidkaervej 27a, DK-5250 Odense SV, Denmark

PGP/PGM 620 Specification - Standard Displacements - Single Unit

Pump Displacement	Code	0160	0190	0230	0260	0290	0330	0360	0370	0410	0440	0500	0520
	cm³/rev	16.0	19.0	23.0	26.0	29.0	33.0	36.0	37.0	41.0	44.0	50.0	52.0
Max. Continuous Pressure	bar	275	275	275	275	275	275	250	250	220	210	210	210
Minimum Speed @ Max. outlet pressure	rpm	500	500	500	500	500	500	500	500	500	500	500	500
Maximum Speed @ 0 Inlet & Max. outlet pressure	rpm	3500	3500	3500	3500	3500	3500	3500	3500	3500	3500	3000	3000
Dimension "X"	mm	79.2	82.5	86.9	90.2	93.5	97.9	101.2	102.3	106.7	110.0	116.6	118.8
Dimension "Y"	mm	122.7	126.0	130.4	133.7	137.0	141.4	144.7	145.8	150.2	153.5	160.1	162.3
Approx. Weight	kg	12.0	12.1	12.2	12.3	12.6	12.7	12.8	12.9	13.0	13.1	13.3	13.4

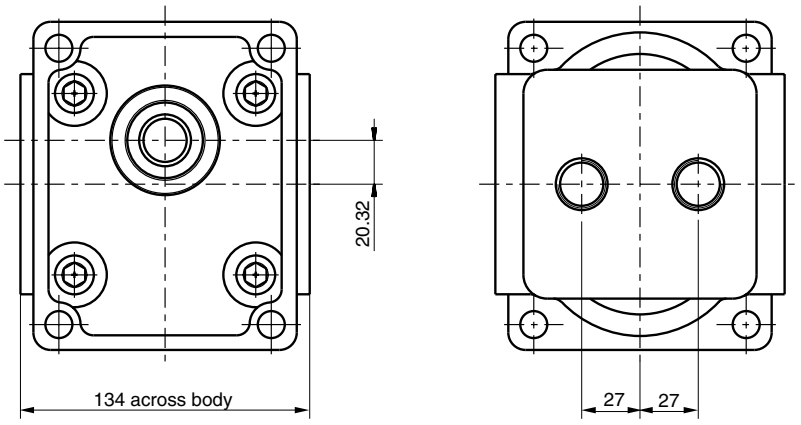

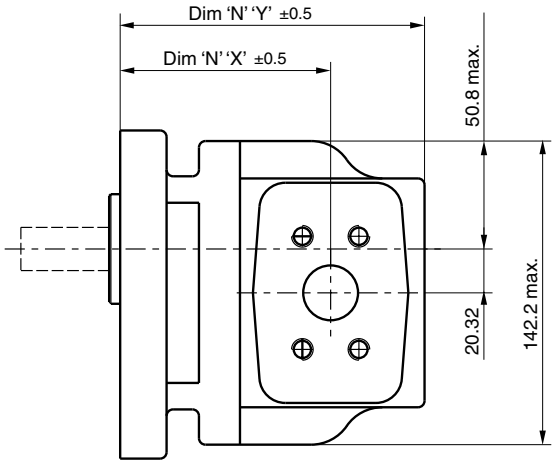

Dimension Flanges see pages 63 to 64
Dimension Shafts see pages 67 to 68

Tel: +45 63 12 83 00 | Email: ps@hymatik.com | www.hymatik.com | Hvidkaervej 27a, DK-5250 Odense SV, Denmark

PGP 625 Specification - Standard Displacements - Single Unit

Pump Displacement	Code	0360	0410	0450	0500
	cm³/rev	36.0	41.0	45.0	50.0
Max. Continuous Pressure	bar	280	280	260	230
Minimum Speed @ Max. outlet pressure	rpm	500	500	500	500
Maximum Speed @ 0 Inlet & Max. outlet pressure	rpm	3500	3500	3500	3000
Dimension "X"	mm	101.2	106.7	110.0	116.6
Dimension "Y"	mm	144.7	150.2	153.5	160.1
Approx. Weight	kg	12.8	13.0	13.1	13.3

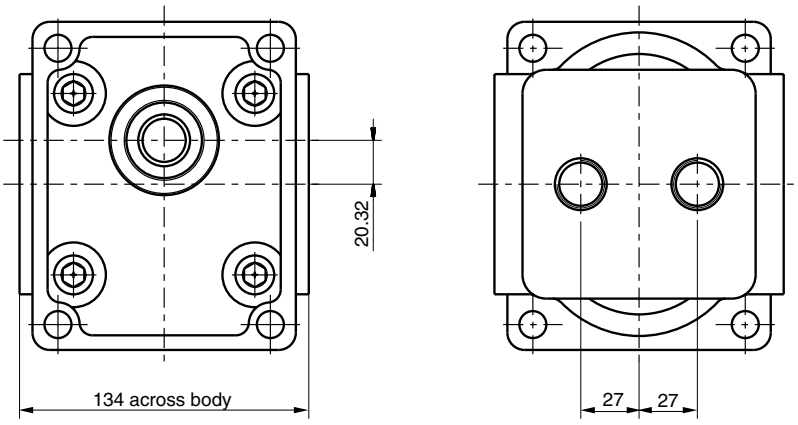

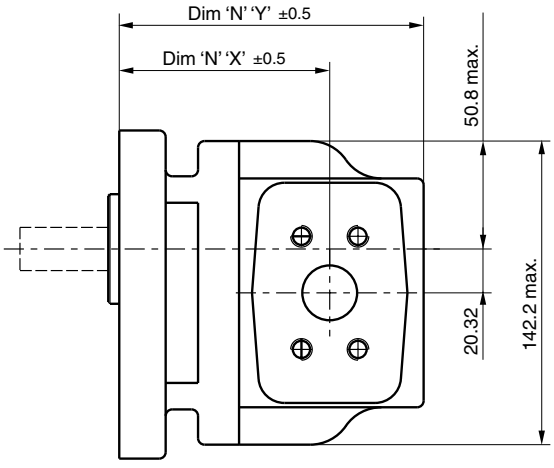

Dimension Flanges see pages 63 to 64
Dimension Shafts see pages 67 to 68

Tel: +45 63 12 83 00 | Email: ps@hymatik.com | www.hymatik.com | Hvidkaervej 27a, DK-5250 Odense SV, Denmark

PGP/PGM 620 Specification - Standard Displacements - Tandem Unit

Pump Displacement	Code	0160	0190	0230	0260	0290	0330	0360	0370	0410	0440	0500	0520
	cm³/rev	16.0	19.0	23.0	26.0	29.0	33.0	36.0	37.0	41.0	44.0	50.0	52.0
Dimension "X"	mm	79.2	82.5	86.9	90.2	93.5	97.9	101.2	102.3	106.7	110.0	116.6	118.8
Dimension "Y1 "	mm	120.2	123.5	127.9	131.2	134.5	138.9	142.2	143.3	147.7	151.0	157.6	159.8
Dimension "Y2" max.	mm	115.2	118.5	122.9	126.2	129.5	133.9	137.2	138.3	142.7	146.0	152.6	154.8
Approximate Weight (front section)	kg	12.0	12.1	12.2	12.3	12.6	12.7	12.8	12.9	13.0	13.1	13.3	13.4
Approx. Weight (rear section)	kg	10.4	10.5	10.6	10.7	11.0	11.1	11.2	11.3	11.4	11.5	11.7	11.8

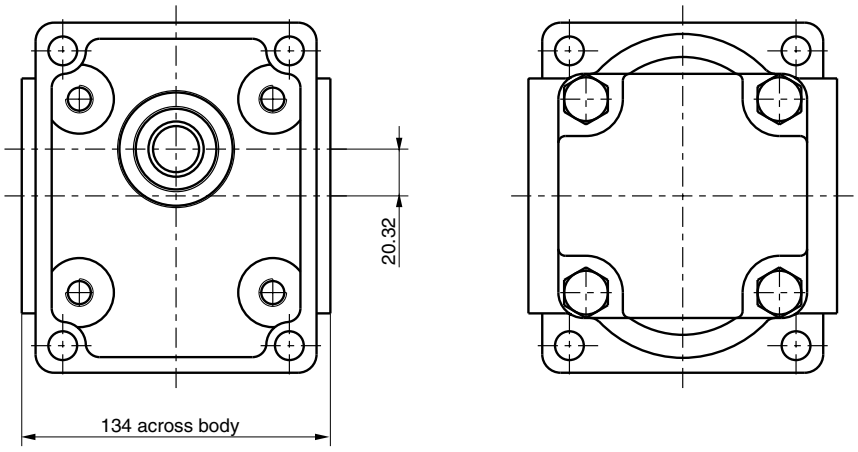

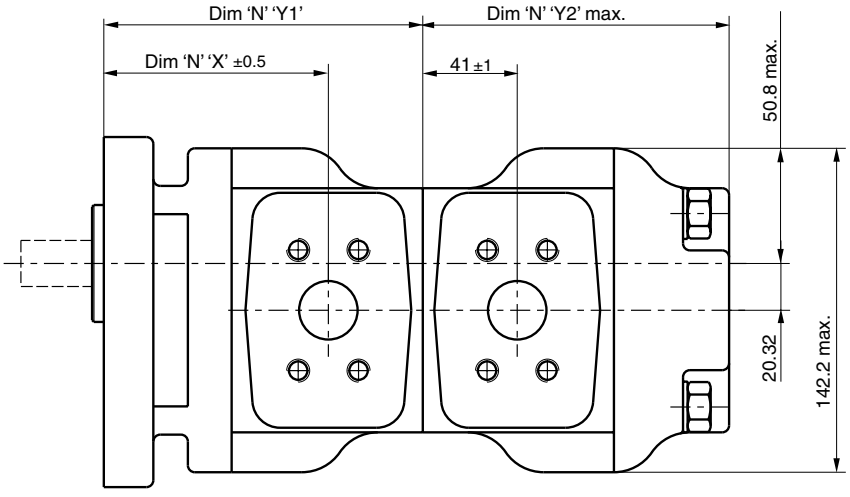

Dimension Flanges see pages 63 to 64
Dimension Shafts see pages 67 to 68

Tel: +45 63 12 83 00 | Email: ps@hymatik.com | www.hymatik.com | Hvidkaervej 27a, DK-5250 Odense SV, Denmark

PGP 625 Specification - Standard Displacements - Tandem Unit

Pump Displacement	Code	0360	0410	0450	0500
	cm³/rev	36.0	41.0	45.0	50.0
Dimension "X"	mm	101.2	106.7	110.0	116.6
Dimension "Y1 "	mm	142.2	147.7	151.0	157.6
Dimension "Y2" max.	mm	137.2	142.7	146.0	152.6
Approximate Weight (front section)	kg	12.8	13.0	13.1	13.3
Approx. Weight (rear section)	kg	11.2	11.4	11.5	11.7

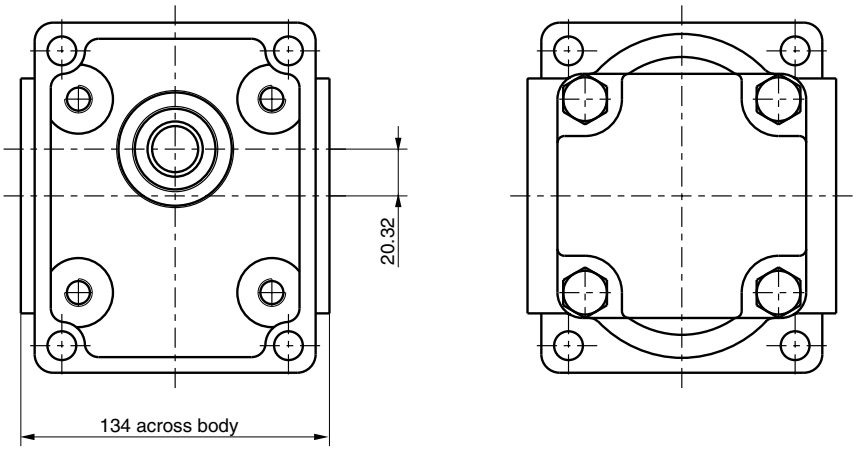

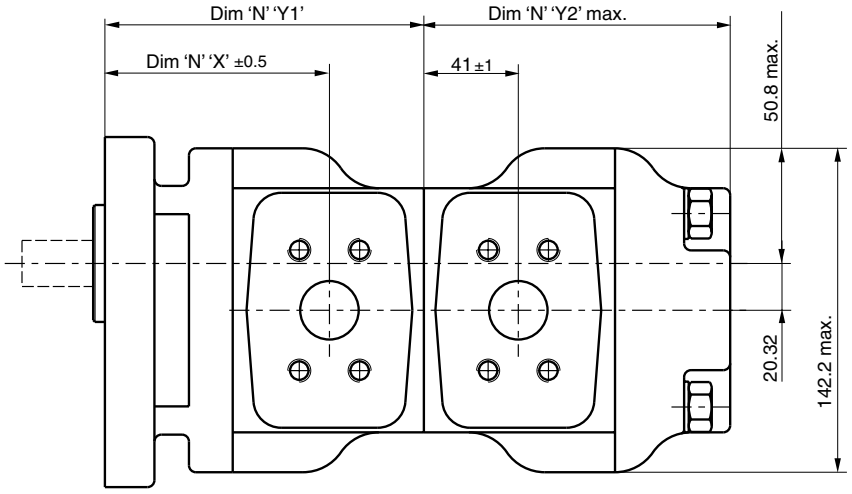

Dimension Flanges see pages 63 to 64
Dimension Shafts see pages 67 to 68

Parker Hannifin
Pump and Motor Division
Chemnitz, Germany

Tel: +45 63 12 83 00 | Email: ps@hymatik.com | www.hymatik.com | Hvidkaervej 27a, DK-5250 Odense SV, Denmark

PGP/PGM 620 / 625 Mounting Flange

Code A3

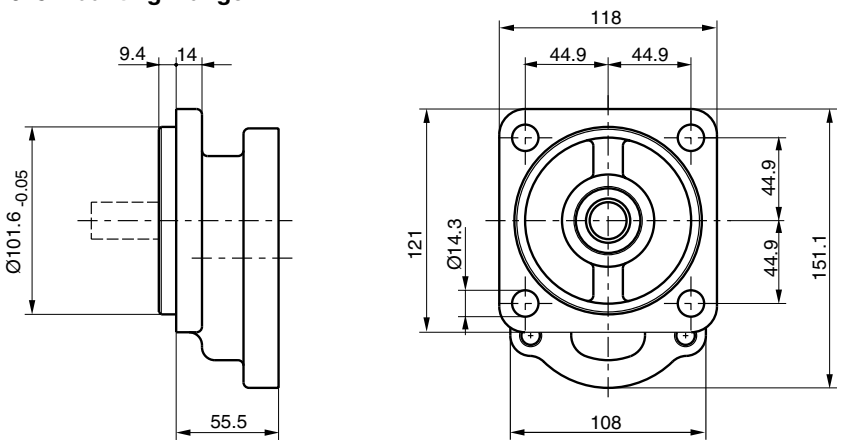

Code A4

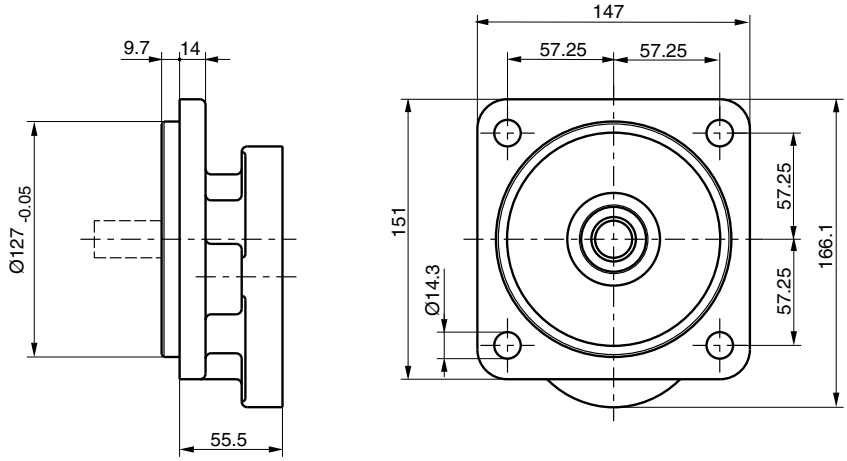

Code D7

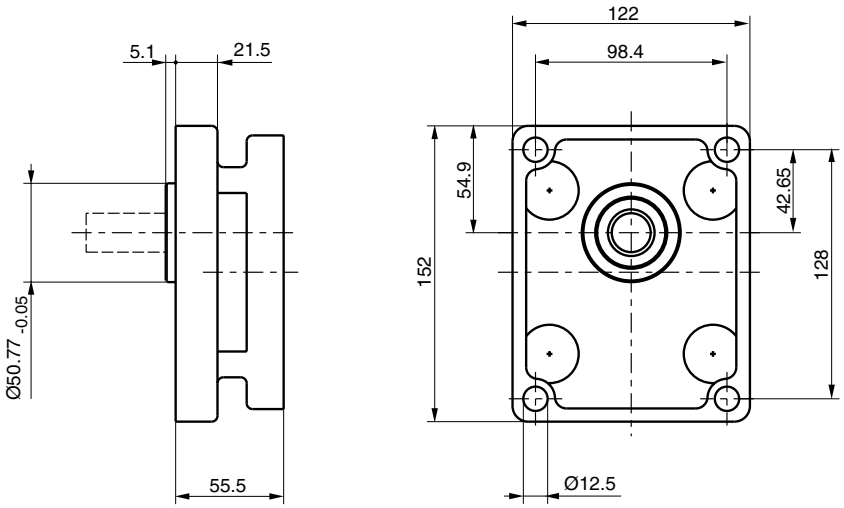

Parker Hannifin
Pump and Motor Division
Chemnitz, Germany

Tel: +45 63 12 83 00 | Email: ps@hymatik.com | www.hymatik.com | Hvidkaervej 27a, DK-5250 Odense SV, Denmark

PGP/PGM 620 / 625 Mounting Flange

Code H2

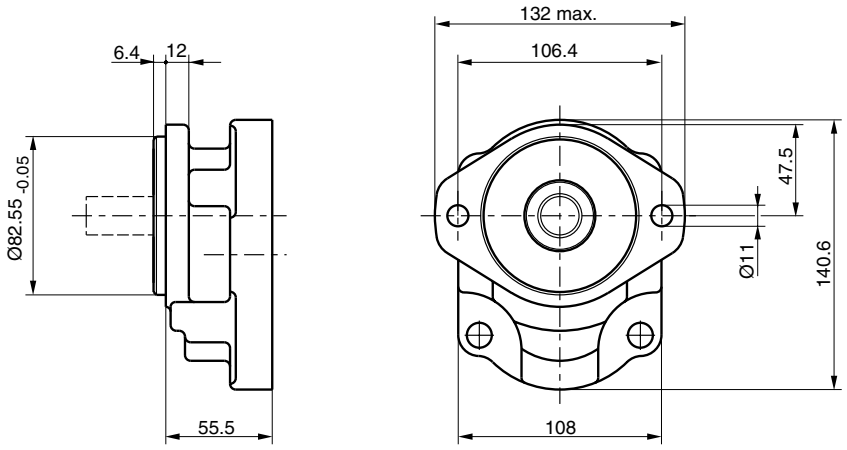

Code H3

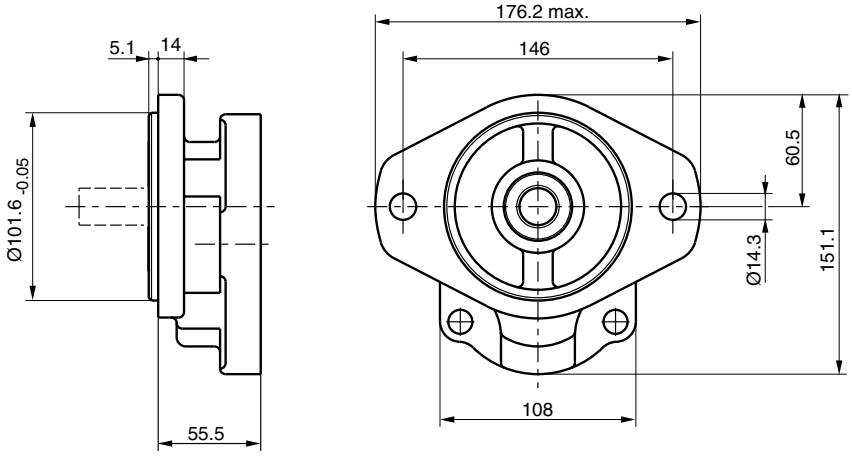

Code L3

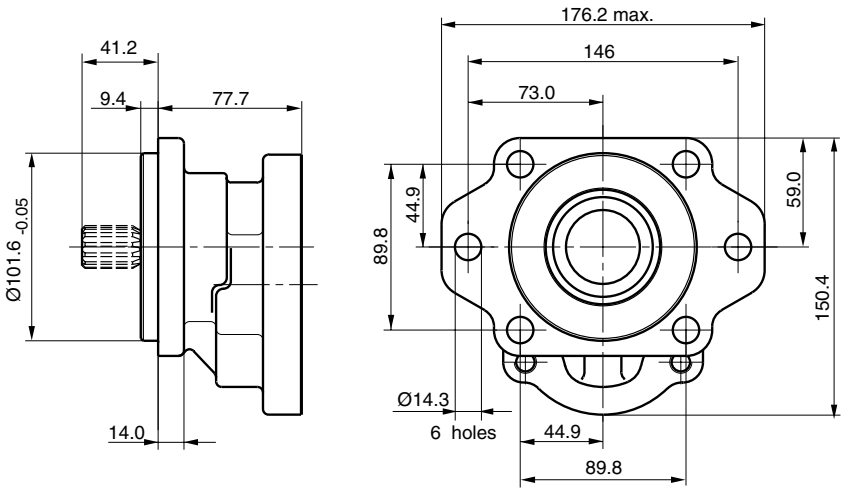

Parker Hannifin
Pump and Motor Division
Chemnitz, Germany

Tel: +45 63 12 83 00 | Email: ps@hymatik.com | www.hymatik.com | Hvidkaervej 27a, DK-5250 Odense SV, Denmark

PGP/PGM 620 / 625 Porting
Code L
4-Bolt flange

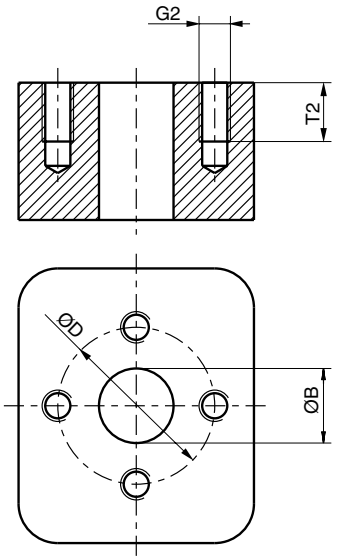

Code J
European flange

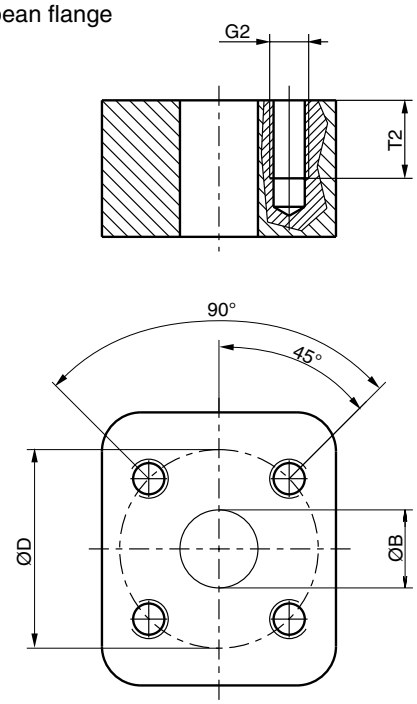

PGP/PGM / 625 620

Code	G2	ØB	ØD	C	W	T2
	Thread	Dimensions				
J5	M6	15.0	35.0			12.5
J7	M6	20.0	40.0			13.0
J8	M8	18.0	55.0			15.0
J9	M8	26.0	55.0			15.0
L1	M6	13.0	30.0			13.0
L2	M8	19.0	40.0			15.0
L3	M10	27.0	51.0			18.0
S2	3/8-16 UNC	19.0		47.63	22.23	14.0
S3	3/8-16 UNC	25.4		52.37	26.19	20.6
S4	7/16-14 UNC	31.8		58.72	30.17	20.6
S5	1/2-13 UNC	38.1		69.82	35.71	20.6
S6	1/2-13 UNC	50.8		77.77	42.88	20.6
T2	M10	19.0		47.63	22.23	20.6
T3	M10	25.4		52.37	26.19	21.4
T4	M10	31.8		58.72	30.17	20.6
T5	M12	38.1		69.82	35.71	20.6
T6	M12	50.8		77.77	42.88	20.6

Code S
SAE split flange

Code T
SAE split flange metric thread

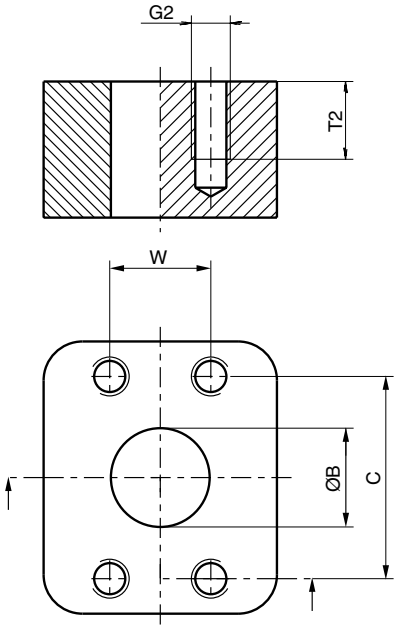

Parker Hannifin
Pump and Motor Division
Chemnitz, Germany

Tel: +45 63 12 83 00 | Email: ps@hymatik.com | www.hymatik.com | Hvidkaervej 27a, DK-5250 Odense SV, Denmark

PGP/PGM 620 / 625 Porting

Code D
SAE straight thread

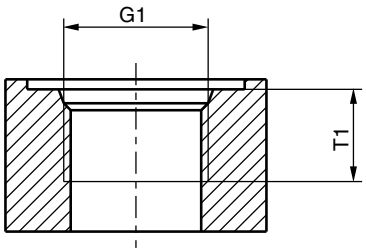

Code E
BSP - thread

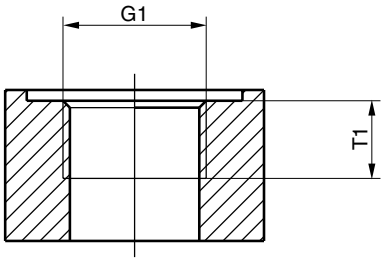

PGP/PGM 620 / 625

Code	G1	T1
	Thread	Dimensions
D3	3/4-16 UNF	14.3
D4	7/8-14 UNF	16.7
D5	1 1/16-12 UN	19.0
D6	1 5/16-12 UN	19.0
D7	1 5/8-12 UN	19.0
D8	1 7/8-12 UN	19.0
E3	1/2-14 BSP	14.0
E4	5/8-14 BSP	16.3
E5	3/4-16 BSP	16.0
E6	1-11 BSP	18.0
E7	1 1/4-11 BSP	20.0
E8	1 1/2-11 BSP	22.0

Tel: +45 63 12 83 00 | Email: ps@hymatik.com | www.hymatik.com | Hvidkaervej 27a, DK-5250 Odense SV, Denmark

PGP/PGM 620 / 625 Drive Shaft

Code D1

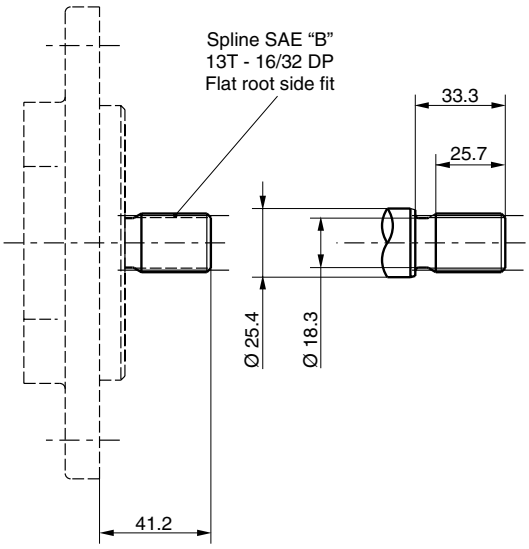

Code E1

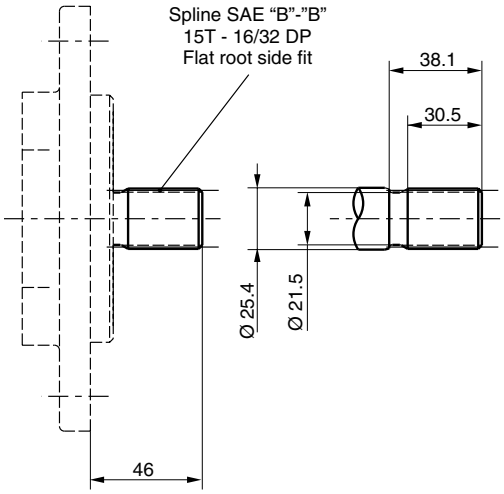

Code M3

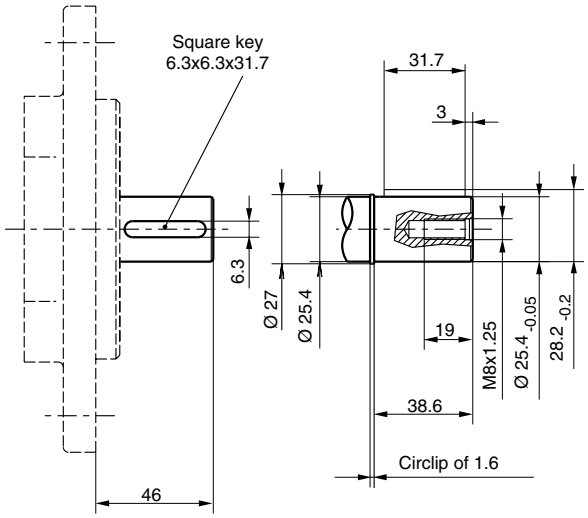

Parker Hannifin
Pump and Motor Division
Chemnitz, Germany

Tel: +45 63 12 83 00 | Email: ps@hymatik.com | www.hymatik.com | Hvidkaervej 27a, DK-5250 Odense SV, Denmark

PGP/PGM 620 / 625 Drive Shaft

Code T1

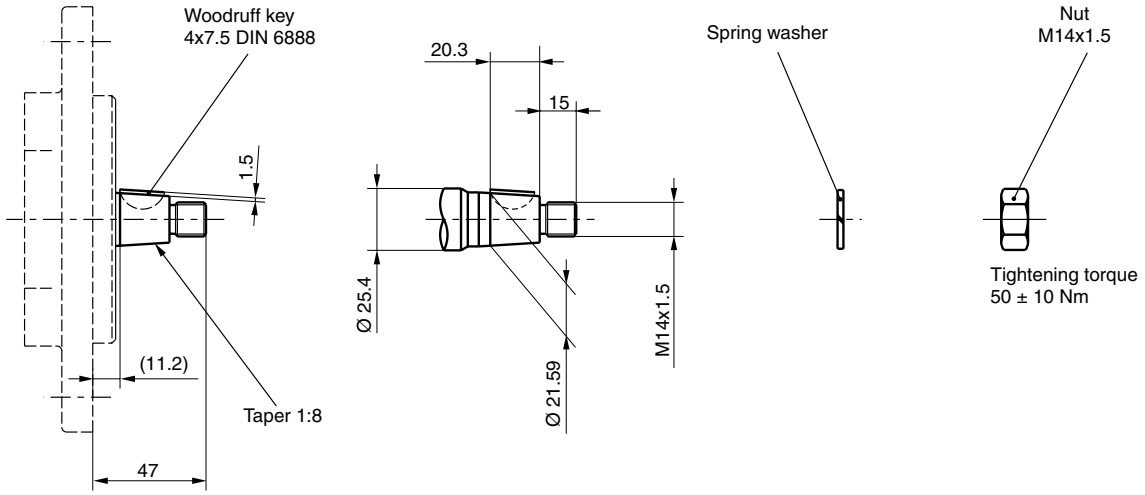

Code T2

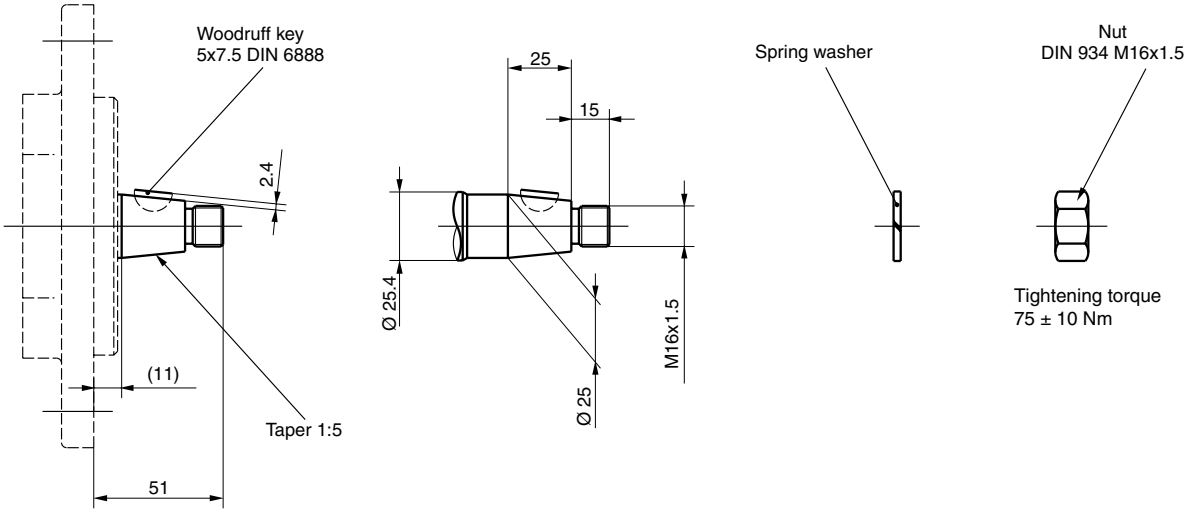

PGP/PGM 620 / 625- Shaft Load Capacity

Code	Description		Torque Rating [Nm]
D1	13T, 16/32 DP, 41.2L, SAE “B“	spline	272
E1	15T, 16/32 DP, 46L, SAE “B-B“	spline	460
E4	14T, 12/24 DP, 55.6L, SAE ”C”	splined	(272)
M3	Ø25.4, 6.3 KEY, M8, 46L, SAE “B-B“	parallel	325
T1	Ø21.59, 11.2L, 4.0 KEY, M14x1.5	taper 1:8	218
T2	Ø25.0, 12.0 L, 5.0 KEY, M16x1.5	taper 1:5	301
	Multiple pump connection shaft		228

$$\text{Torque [Nm]} = \frac{\text{Displacement [cm}^3\text{/rev] x Pressure [bar]}}{57.2}$$

Parker Hannifin
Pump and Motor Division
Chemnitz, Germany

Tel: +45 63 12 83 00 | Email: ps@hymatik.com | www.hymatik.com | Hvidkaervej 27a, DK-5250 Odense SV, Denmark

PGP/PGM 640 Specification - Standard Displacements - Single Unit

Pump Displ	Code	300	350	400	450	500	550	600	650	700	750	800	900	1000
	cm³/rev	30.0	35.0	40.0	45.0	50.0	55.0	60.0	65.0	70.0	75.0	80.0	90.0	100.0
Max. Continuous Pressure	bar	310	310	310	310	310	310	290	265	245	225	210	190	180
Minimum Speed at max. outlet pressure	rpm	500	500	500	500	500	500	500	500	500	500	500	500	500
Maximum Speed at = inlet & max. Outlet pressure	rpm	3000	3000	3000	3000	3000	3000	3000	3000	3000	3000	3000	3000	3000
Dimension "X"	mm	128.6	128.6	131.8	131.8	135.6	135.6	138.4	138.4	142.2	142.2	142.2	149.8	149.8
Dimension "Y"	mm	176.1	176.1	182.7	182.7	189.3	189.3	195.8	195.8	203.2	203.2	203.2	216.4	216.4
Aprox. Weight	Kg	20.6	20.6	21.2	21.2	22.0	22.0	22.6	22.6	23.3	23.3	25.0	25.5	25.5

Dimension Flanges see pages 73 to 74
Dimension Shafts see page 77

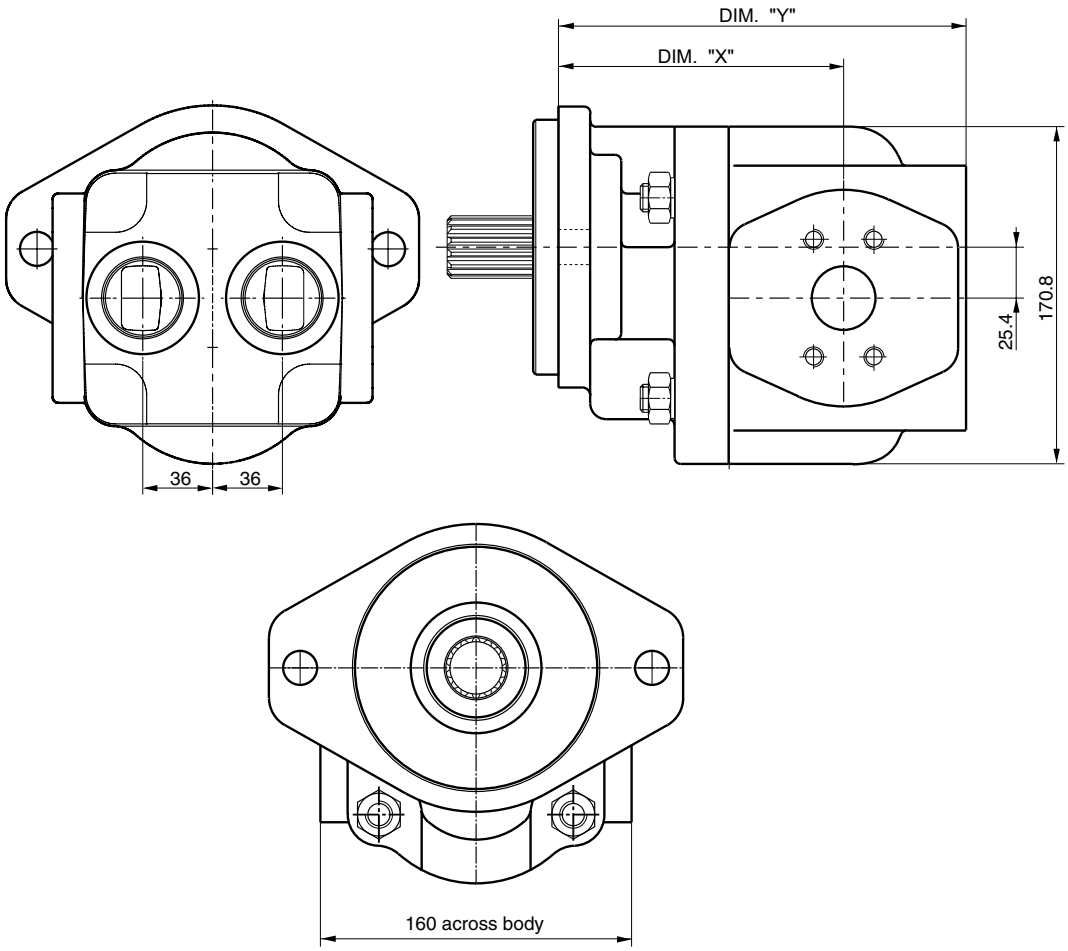

Parker Hannifin
Pump and Motor Division
Chemnitz, Germany

Tel: +45 63 12 83 00 | Email: ps@hymatik.com | www.hymatik.com | Hvidkaervej 27a, DK-5250 Odense SV, Denmark

PGP/PGM 640 Specification - Standard Displacements - Tandem Unit

Pump Displ	Code	300	350	400	450	500	550	600	650	700	750	800	900	1000
	cm³/rev	30.0	35.0	40.0	45.0	50.0	55.0	60.0	65.0	70.0	75.0	80.0	90.0	100.0
Dimension "X1"	mm	128.6	128.6	131.8	131.8	135.6	135.6	138.4	138.4	142.2	142.2	142.2	149.8	149.8
Dimension "Y1"	mm	176.1	176.1	182.7	182.7	189.3	189.3	195.8	195.8	203.2	203.2	203.2	216.4	216.4
Dimension "X2"	mm	44.3	44.3	47.8	47.8	50.5	50.5	54.3	54.3	57.8	57.8	57.8	63.4	63.4
Dimension "Y2"	mm	147.5	147.5	154.1	154.1	160.7	160.7	167.2	167.2	174.6	174.6	174.6	184.2	184.2
Aprox. Weight front section	Kg	20.6	20.6	21.2	21.2	22.0	22.0	22.6	22.6	23.3	23.3	25.0	25.5	25.5
Aprox. Weight rear section	Kg	20.1	20.1	20.7	20.7	21.5	21.5	22.1	22.1	22.8	22.8	24.5	25.0	25.0

Dimension Flanges see pages 73 to 74
Dimension Shafts see page 77

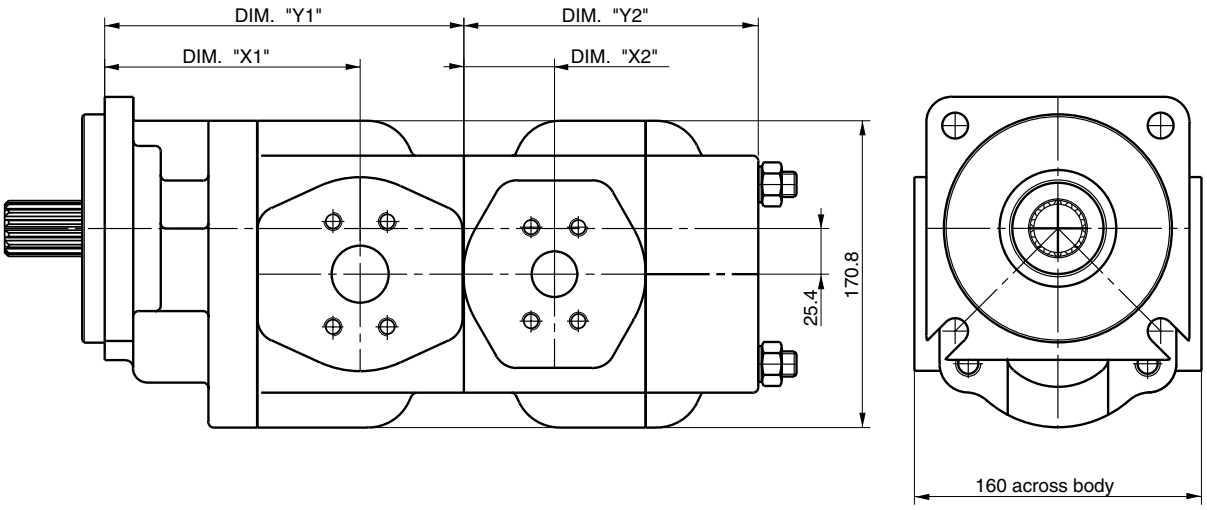

Parker Hannifin
Pump and Motor Division
Chemnitz, Germany

Tel: +45 63 12 83 00 | Email: ps@hymatik.com | www.hymatik.com | Hvidkaervej 27a, DK-5250 Odense SV, Denmark

PGP 640/620 Specification - Standard Displacements - Tandem Unit

Pump Displ. 640	Code	300	350	400	450	500	550	600	650	700	750	800	900	1000
	cm³/rev	30.0	35.0	40.0	45.0	50.0	55.0	60.0	65.0	70.0	75.0	80.0	90.0	100.0
Dimension "X1"	mm	128.6	128.6	131.8	131.8	135.6	135.6	138.4	138.4	142.2	142.2	142.2	149.8	149.8
Dimension "Y1"	mm	176.1	176.1	182.7	182.7	189.3	189.3	195.8	195.8	203.2	203.2	203.2	216.4	216.4
Pump Displ. 620	Code	160	190	210	230	260	290	330	360	370	410	440	500	520
	cm³/rev	16.0	19.0	21.0	23.0	26.0	29.0	33.0	36.0	37.0	41.0	44.0	50.0	52.0
Dimension "Y2"	mm	115.2	118.5	120.7	122.9	126.2	129.5	133.9	137.2	138.3	142.7	146	152.6	154.8
Aprox. Weight front section	Kg	20.6	20.6	21.2	21.2	22.0	22.0	22.6	22.6	23.3	23.3	25.0	25.5	25.5
Aprox. Weight rear section	Kg	10.4	10.5	10.5	10.6	10.7	11	11.1	11.2	11.3	11.4	11.5	11.7	11.8

Dimension Flanges see pages 73 to 74
Dimension Shafts see page 77

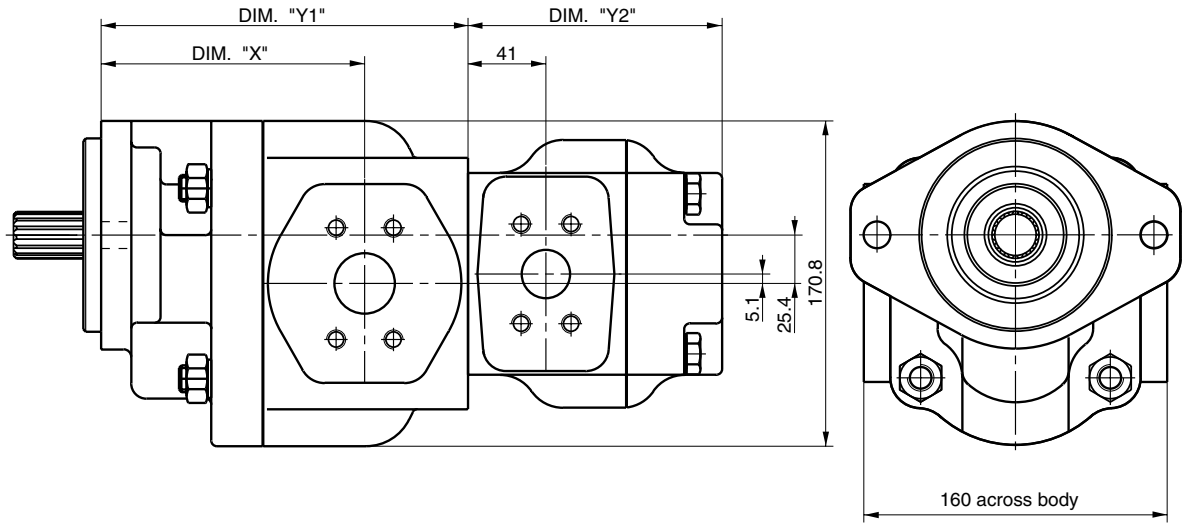

Parker Hannifin
Pump and Motor Division
Chemnitz, Germany

PGP 640/625 Specification - Standard Displacements - Tandem Unit

Pump Displ. 640	Code	300	350	400	450	500	550	600	650	700	750	800	900	1000
	cm³/rev	30.0	35.0	40.0	45.0	50.0	55.0	60.0	65.0	70.0	75.0	80.0	90.0	100.0
Dimension "X1"	mm	128.6	128.6	131.8	131.8	135.6	135.6	138.4	138.4	142.2	142.2	142.2	149.8	149.8
Dimension "Y1"	mm	176.1	176.1	182.7	182.7	189.3	189.3	195.8	195.8	203.2	203.2	203.2	216.4	216.4
Pump Displ. 625	Code	360	410	450	500									
	cm³/rev	36.0	41.0	44.0	50.0									
Dimension "Y2"	mm	137.2	142.7	146	152.6									
Aprox. Weight front section	Kg	22.6	23.3	25.0	25.5									
Aprox. Weight rear section	Kg	11.2	11.4	11.5	11.7									

Dimension Flanges see pages 73 to 74
Dimension Shafts see page 77

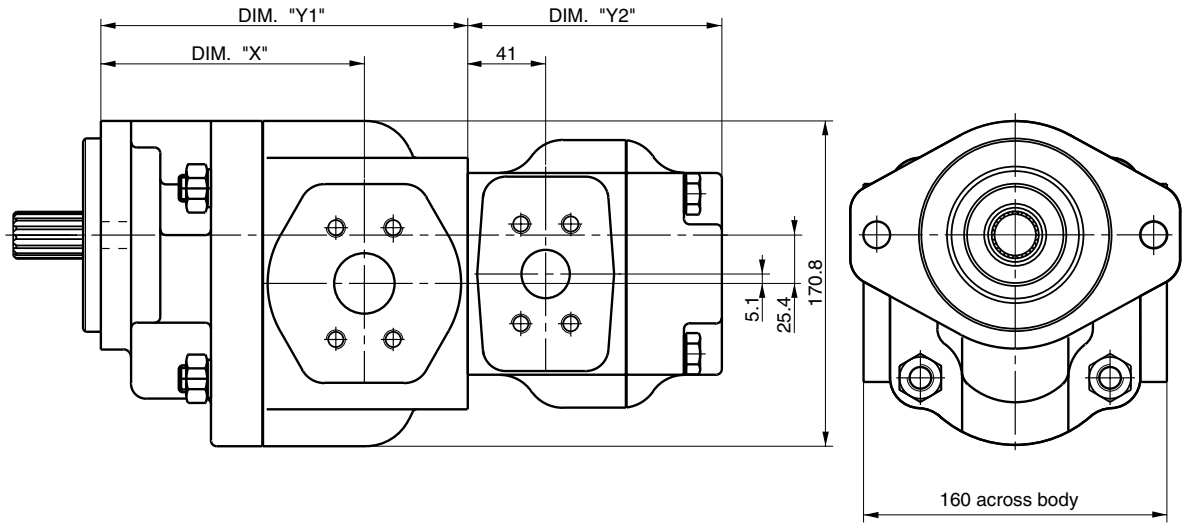

Parker Hannifin
Pump and Motor Division
Chemnitz, Germany

Tel: +45 63 12 83 00 | Email: ps@hymatik.com | www.hymatik.com | Hvidkaervej 27a, DK-5250 Odense SV, Denmark

PGP/PGM 640 Mounting Flange

Code A3

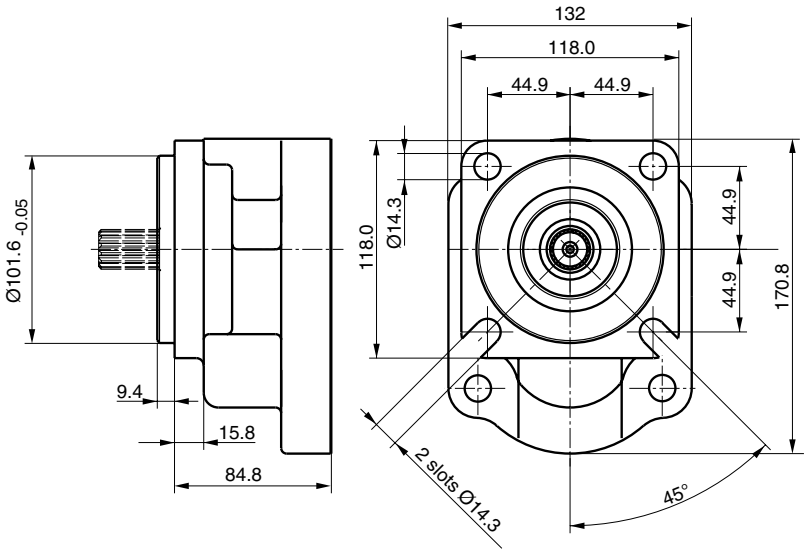

Code A4

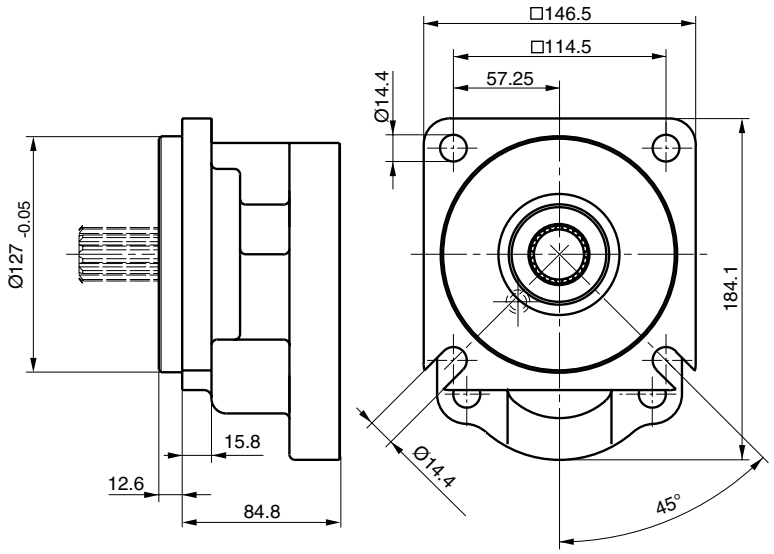

Parker Hannifin
Pump and Motor Division
Chemnitz, Germany

PGP/PGM 640 Mounting Flange

Code H3

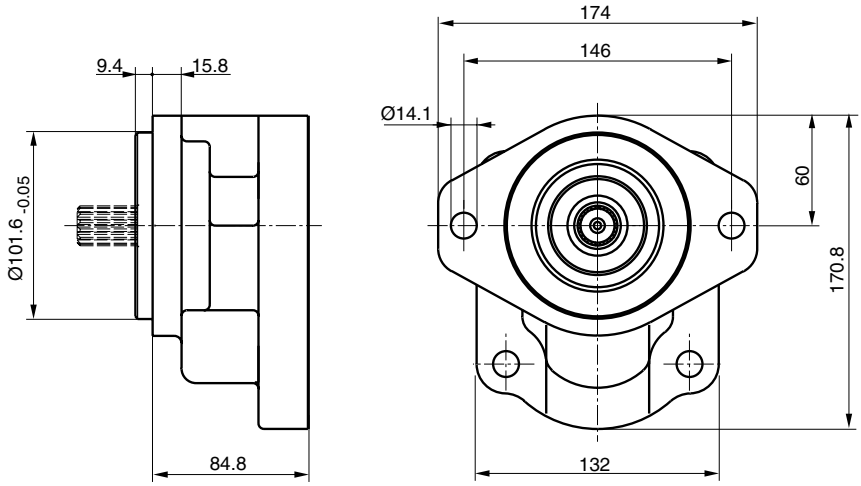

Code K3

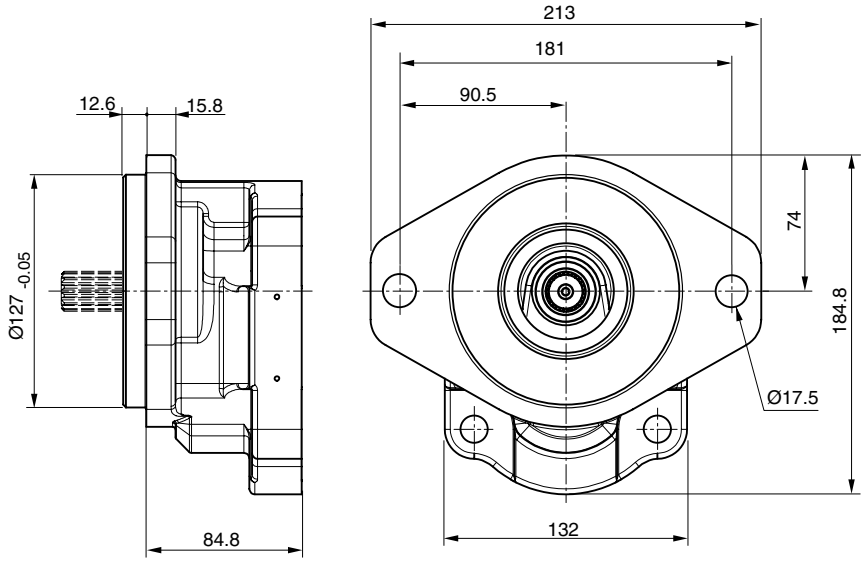

Tel: +45 63 12 83 00 | Email: ps@hymatik.com | www.hymatik.com | Hvidkaervej 27a, DK-5250 Odense SV, Denmark

PGP/PGM 640 Porting
Code L
4-Bolt flange

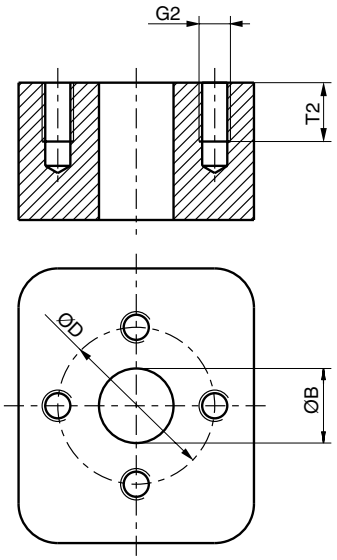

Code J
European flange

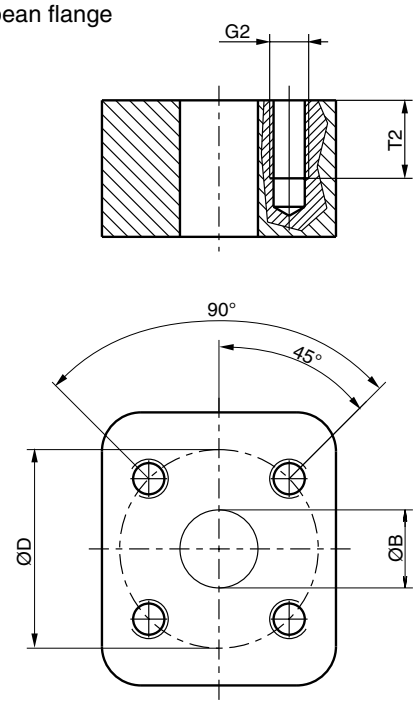

PGP/PGM 640

Code	G2	ØB	ØD	C	W	T2
	Thread	Dimensions				
J8	M8	18.0	55.0			15.0
J9	M8	26.0	55.0			15.0
L2	M8	19.0	40.0			15.0
L3	M10	27.0	51.0			18.0
S2	3/8-16 UNC	19.0		47.63	22.23	14.0
S3	3/8-16 UNC	25.4		52.37	26.19	20.6
S4	7/16-14 UNC	31.8		58.72	30.17	20.6
S5	1/2-13 UNC	38.1		69.82	35.71	20.6
S6	1/2-13 UNC	50.8		77.77	42.88	20.6
T2	M10	19.0		47.63	22.23	20.6
T3	M10	25.4		52.37	26.19	21.4
T4	M10	31.8		58.72	30.17	20.6
T5	M12	38.1		69.82	35.71	20.6
T6	M12	50.8		77.77	42.88	20.6

Code S
SAE split flange

Code T
SAE split flange metric thread

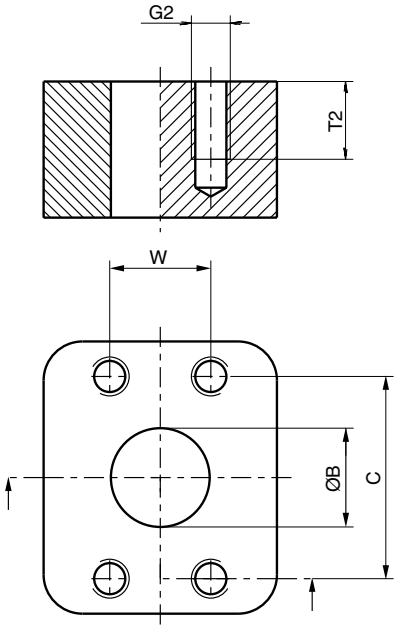

Parker Hannifin
Pump and Motor Division
Chemnitz, Germany

Tel: +45 63 12 83 00 | Email: ps@hymatik.com | www.hymatik.com | Hvidkaervej 27a, DK-5250 Odense SV, Denmark

PGP/PGM 640 Porting

Code D
SAE straight thread

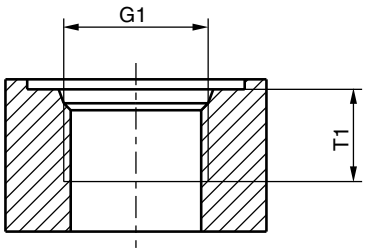

Code E
BSP - thread

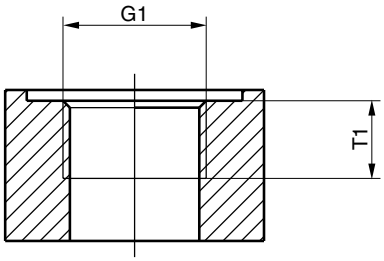

PGP/PGM 640

Code	G1	T1
	Thread	Dimensions
D5	1 1/16-12 UN	19.0
D6	1 5/16-12 UN	19.0
D7	1 5/8-12 UN	19.0
D8	1 7/8-12 UN	19.0
E4	5/8-14 BSP	16.3
E5	3/4-16 BSP	16.0
E6	1-11 BSP	18.0
E7	1 1/4-11 BSP	20.0
E8	1 1/2-11 BSP	22.0

Tel: +45 63 12 83 00 | Email: ps@hymatik.com | www.hymatik.com | Hvidkaervej 27a, DK-5250 Odense SV, Denmark

PGP/PGM 640 Drive Shaft

Code D1

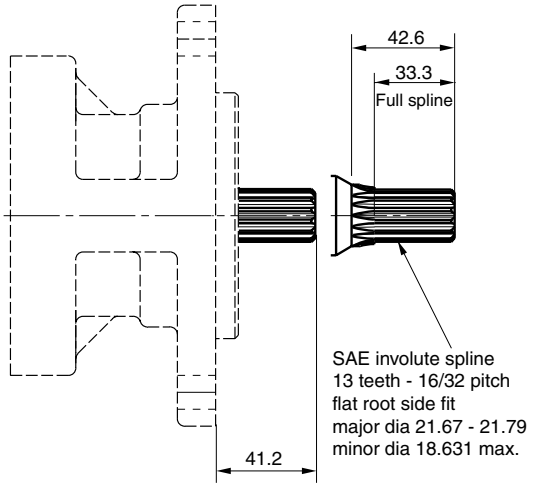

Code E1

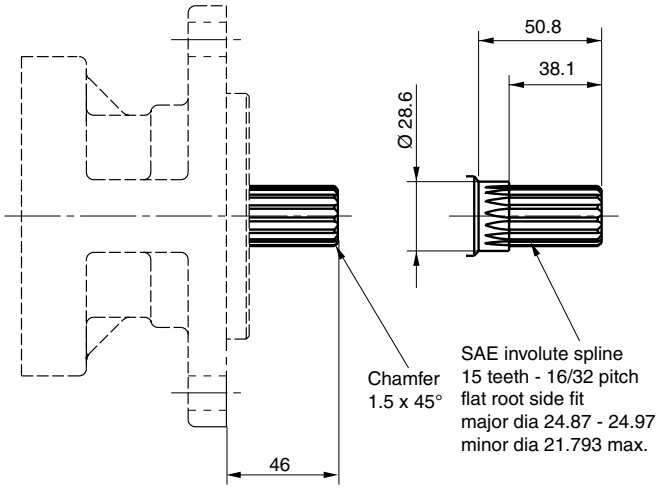

Code E4

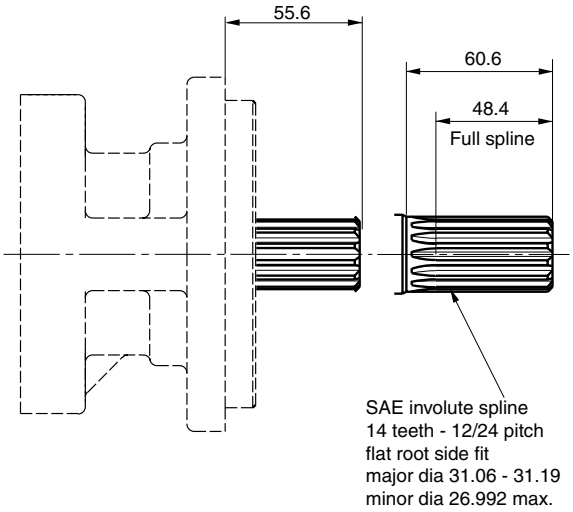

Code N1

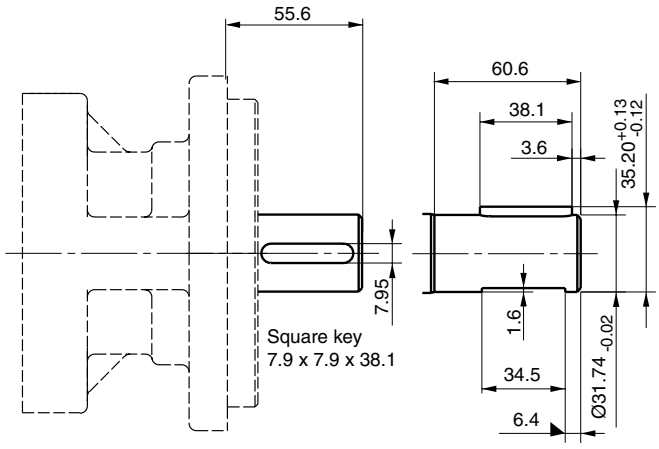

Tel: +45 63 12 83 00 | Email: ps@hymatik.com | www.hymatik.com | Hvidkaervej 27a, DK-5250 Odense SV, Denmark

Shaft loads PGP/PGM500

Code	Description	Type	Torque rating [Nm]			
			PGP 502	PGP 505	PGP/PGM511	PGP 517
H1	Ø10.0, 3.0 key, no thread, 36L	parallel	30	—	—	—
P2	Ø9.95, 8.8L, 2.4 key, M6	taper 1:8	30	—	—	—
V1	5 x 6.5 long shaft w/o coupling	tang drive	20	—	—	—
A1	9T, 16/32DP, 32L, SAE ”A”	splined	—	108	—	—
J1	Ø12.7, 3.2 key, no thread, 38L	parallel	—	43	—	—
K1	Ø15.88, 4.0 key, no thread, 32L, SAE ”A”	parallel	—	85	—	—
Q2	Ø14.25, 5.5L, 3.0 key, M10x1	taper 1:8	—	68	—	—
A1	9T, 16/32DP, 32L, SAE ”A”	splined	—	—	86	—
C1	11T, 16/32DP, 38.2L, SAE 19-4	splined	—	—	166	—
F5	B8x32x36 DIN ISO 14 (similar to DIN 5462)	splined	—	—	166	—
K1	Ø15.88, 4.0 key, no thread, 32L, SAE ”A”	parallel	—	—	75	—
L6	Ø19.05, 4.8 key, no thread, 32L, SAE 19-1	parallel	—	—	145	—
S1	Ø17.0, 7.7L, 3.0 key, M12x1.5	taper 1:5	—	—	193	—
S2	Ø16.65, 12.0L, 3.2 key, M12x1.5	taper 1:8	—	—	198	—
S8	Ø20.0, 9.0L, 4.0 key, M14x1.5	taper 1:5	—	—	110	—
D1	13T, 16/32DP, 41.2L, SAE ”B”	splined	—	—	—	345
E1	15T, 16/32DP, 46.2L, SAE ”B-B”	splined	—	—	—	530
M1	Ø22.2, 6.3 key, no thread, 41.2L, SAE ”B”	parallel	—	—	—	251
M2	Ø25.4, 6.3 key, no thread, 46L, SAE ”B-B”	parallel	—	—	—	395
T1	Ø21.59, 11.2L, 4.0 key, M14x1.5	taper 1:8	—	—	—	250
	Connecting shaft for multiple units		20	36	110	228

Shaft loads PGP/PGM600

Code	Description	Type	Torque rating]		
			620 [Nm	625 [Nm]	640 [Nm]
D1	13T, 16/32 DP, 41.2L, SAE "B"	splined	272	272	328
E1	15T, 16/32 DP, 46.0L, SAE "B-B"	splined	460	460	503
E4	14T, 12/24 DP, 55.6L, SAE ”C”	splined	—	(272)	960
M3	Ø25.4, 6.3 KEY, M8, 46L, SAE “B-B“	parallel	325	325	—
T1	Ø21.59, 11.2L, 4.0key, M14x1.5	tapered 1:8	218	218	—
T2	Ø25.0, 12.0L, 5.0 KEY, M16x1.5	taper 1:5	301	—	—
N1	1 1/4" SAE-C	keyed	—	—	678
	connecting shaft		228	228	407

Formula to calculate shaft load

$$\text{Torque [Nm]} = \frac{\text{Displacement [cm}^3\text{/rev]} \bullet \text{Pressure [bar]}}{57.2}$$

Hydraulic fluids

Type	Fluid composition	Max. working pressure [bar]	Max. speed [min-1]	Temperature	Seal
Hydraulic fluid	Mineral oil based on hydraulic fluid acc. to ISO/DIN	See table drawings	See table drawings	-15 ... +80 °C -15 ... +120 °C	NBR FPM
HFB	Water-in-oil emulsion 40/60	140	1500	+2 ... +65 °C	NBR
HFC *	Water-glycol 40/60	140	1500	-15 ... +65 °C	NBR
HFD	Phosphate ester	140	1500	-10 ... +80 °C	FPM

* to be used with cast iron pumps/motors only

Parker does not give an explicit recommendation for certain fluid product, fluid brand or fluid manufacturer
The risk of using different kind of fluids has to be taken by the customer.

Flanges for suction and discharge ports

Please refer to Parker Bulletin 4040/UK.

Tel: +45 63 12 83 00 | Email: ps@hymatik.com | www.hymatik.com | Hvidkaervej 27a, DK-5250 Odense SV, Denmark

First pump	Second pump						
	PGP 502	PGP 505	PGP 511	PGP 517	PGP 620	PGP 625	PGP 640
PGP 502	X						
PGP 505		X					
PGP 511	X		X				
PGP 517			X	X			
PGP 620			X		X	X	
PGP 625			X		X	X	
PGP 640			X		X	X	X

Reading Direction

Nomograph for Pipe Velocity

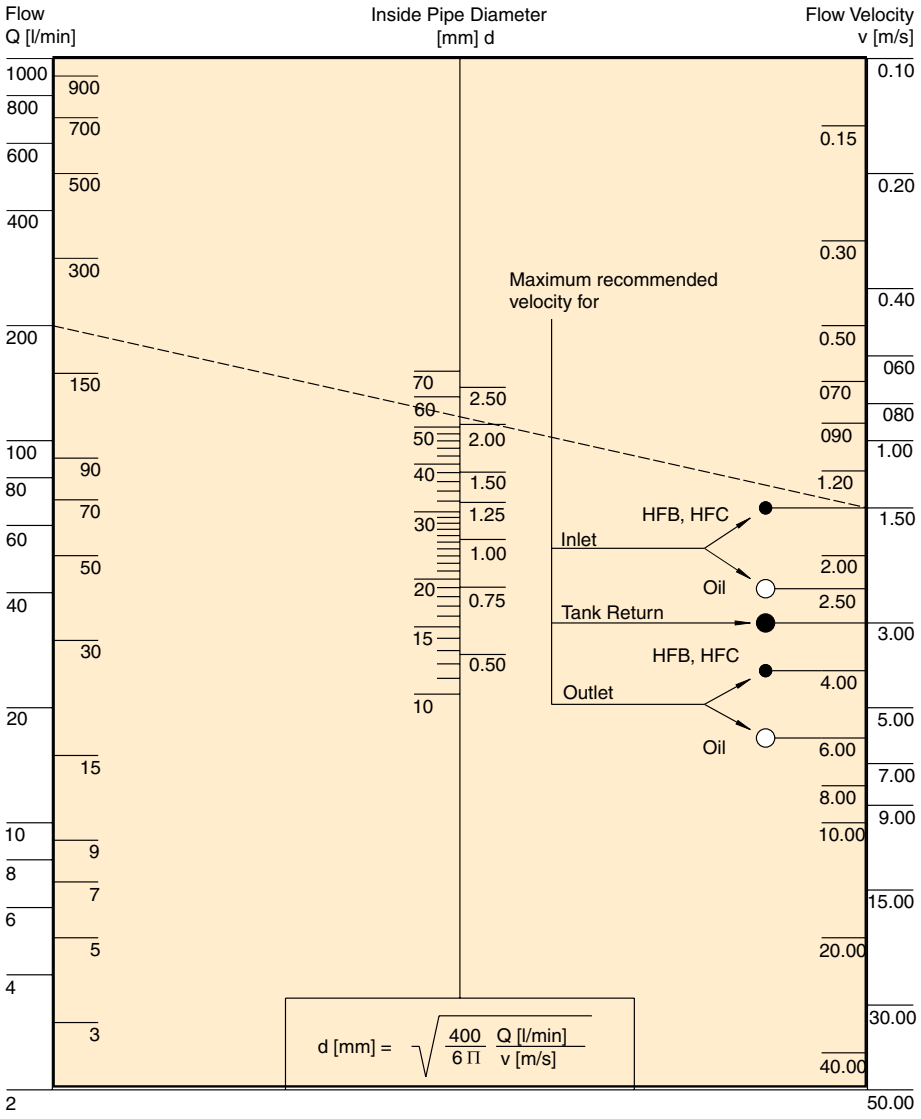

Parker Hannifin
Pump and Motor Division
Chemnitz, Germany

Pressure relief valve / adjustable internal vent

Introduction:

Parker`s valve program was developed in response to requests from OEM customers to reduce the number and total cost of components on their machines. We addressed this challenge by integrating the valves required for machine functions into our hydraulic pumps and motors.

This integration has reduced the number of purchased components, eliminated many of the hydraulic hoses and associated fittings (and potential leak points), and reduced assembly labor cost on the production line.

PGP 502 PGP 505 PGP 511	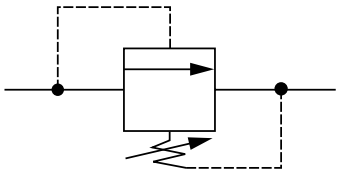			**PGP 517 PGP 620 PGP 625**
CODE	**Pressure bar**		**CODE**	**Pressure bar**
RDAA	10		RDPA	10
RDAB	20		RDPB	20
RDAC	30		RDPC	30
RDAD	40		RDPD	40
RDAE	50		RDPE	50
RDAF	60		RDPF	60
RDAG	70		RDPG	70
RDAH	80		RDPH	80
RDAJ	90		RDPJ	90
RDAK	100		RDPK	100
RDAL	110		RDPL	110
RDAM	120		RDPM	120
RDAN	130		RDPN	130
RDAP	140		RDPP	140
RDAQ	150		RDPQ	150
RDAR	160		RDPR	160
RDAS	170		RDPS	170
RDAT	180		RDPT	180
RDAU	190		RDPU	190
RDAV	200		RDPV	200
RDAW	210		RDPW	210
RDAX	220		RDPX	220
RDAY	230		RDPY	230
RDAZ	240		RDPZ	240

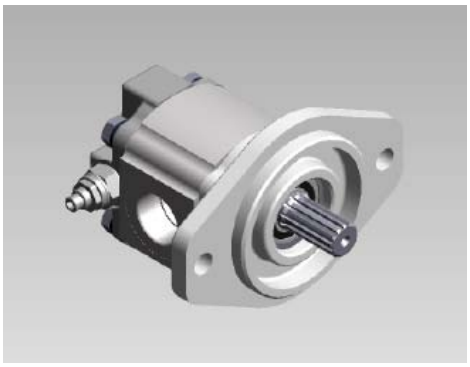

Tel: +45 63 12 83 00 | Email: ps@hymatik.com | www.hymatik.com | Hvidkaervej 27a, DK-5250 Odense SV, Denmark

Priority Flow Divider

1VP- / CVP100- □ Port Configuration □ Port Orientation □ Function □ Priority Port □ Excess Port □ Priority Flow □ R/V Setting

Code	Port Configuration
A	End Priority, End Excess
B	Side Priority, Side Excess
C	End Priority, Side Excess
D	Side Priority, End Excess
E	Double Side Ported

Code	Port Orientation
A	Priority Port on Pump Inlet Side
B	Priority Port on Pump Outlet Side

Code	Function
A	Priority Flow Divider
B	PFD with Full Flow R/V
C	PFD with Pilot R/V

Code	Priority Port
J1	3/4-16UNF
J8	9/16-18UNF
T1	3/8 BSP

other on request

Code	Excess Port
J2	7/8-14UNF
J3	1-1/16-12UN
T2	1/2 BSP
T4	3/4 BSP

other on request

Code	R/V Setting
00	No Relief Valve
A05	Adjustable 40 - 120 bar
A15	Adjustable 130 - 250 bar
05	50 bar
08	80 bar
10	100 bar
11	110 bar
12	120 bar
13	130 bar
14	140 bar
15	150 bar
16	160 bar
17	170 bar
18	180 bar
20	200 bar

other on request

Code	Priority Flow
08	8 lpm
11	11 lpm
15	15 lpm
19	19 lpm
23	23 lpm
30	30 lpm
38	38 lpm

other on request

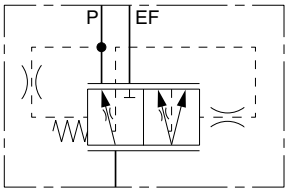

Priority Flow Divider
Function “A”

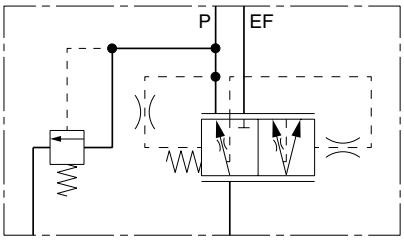

Priority Flow Divider With Full Flow R/V
Function “B”

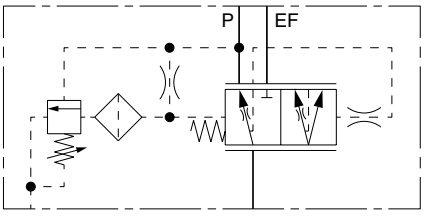

Priority Flow Divider With Pilot R/V
Function “C”

Parker Hannifin
Pump and Motor Division
Chemnitz, Germany

Tel: +45 63 12 83 00 | Email: ps@hymatik.com | www.hymatik.com | Hvidkaervej 27a, DK-5250 Odense SV, Denmark

Priority Flow Divider

Comments:

The Priority Flow Divider provides a constant and specified flow for power steering or other priority functions.

The balance of flow produced by the pump is available from the EF port for additional functions such as open center directional control valves, fan drives , etc. It can also be fitted with a pressure relief valve

Variations for PGP 511 / 517 / 620 / 625 / 640

without priority relief valve (Function “A”)

with full flow priority relief valve (Function “B”)

with pilot priority relief valve (Function “C”)

Pressure Range	
P-port Maximum	230 bar
EF-port Maximum	250 bar

Maximum Flows	
for PGP 511	
P-port	32 lpm
EF-port	70 lpm
max. input flow	70 lpm
for PGP 517 / 620 / 625 / 640	
P-port	45 lpm
EF-port	100 lpm
max. input flow	100 lpm



Port Configuration „A“
Port Orientation „B“

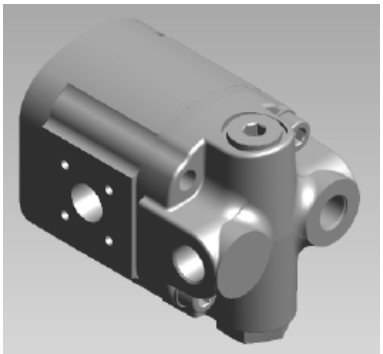

Port Configuration „D“
Port Orientation „A“



Port Configuration „C“
Port Orientation „B“

Tel: +45 63 12 83 00 | Email: ps@hymatik.com | www.hymatik.com | Hvidkaervej 27a, DK-5250 Odense SV, Denmark

Side Mounted Priority Flow Divider (Load Sense or Fixed Flow)

Comments:

Piority Flow Dividers can also be direct mounted to the pressure port to provide a constant and specified flow for power steering or other priority functions.

Variations for PGP 511 / 517 / 620 / 625 / 640

without priority relief valve (Function “A”)
with full flow priority relief valve (Function “B”)
with pilot priority relief valve (Function “C”)

Note: relief valve in the steering unit is required.
control pressure settings and priority flow settings on request

Pressure Range	
for PGP 511 / 517	
P-port Maximum	230 bar
EF-port Maximum	250 bar
for PGP 517 / 620 / 625 / 640	
P-port Maximum	250 bar
EF-port Maximum	310 bar

Maximum Flows	
for PGP 511	
P-port	32 lpm
max. input flow	80 lpm
for PGP 517 / 620 / 625 / 640	
P-port	45 lpm
max. input flow	160 lpm

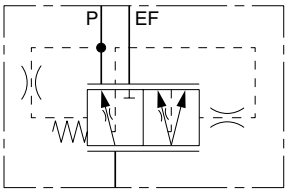

Priority Flow Divider
Function “A”

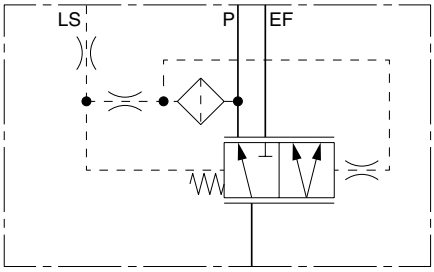

Load Sensing Priority Valve
with Dynamic Load Sensing Signal
Function “F”

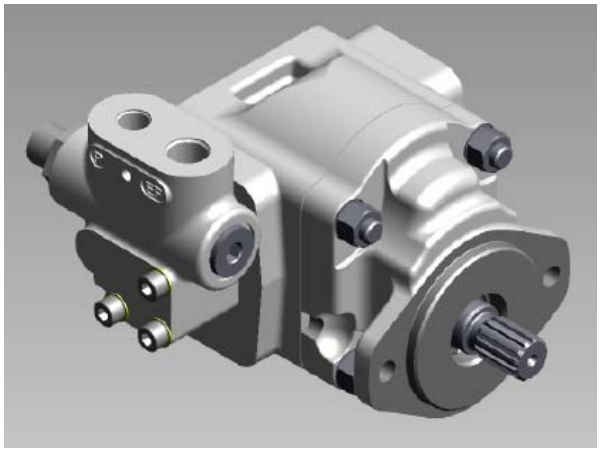

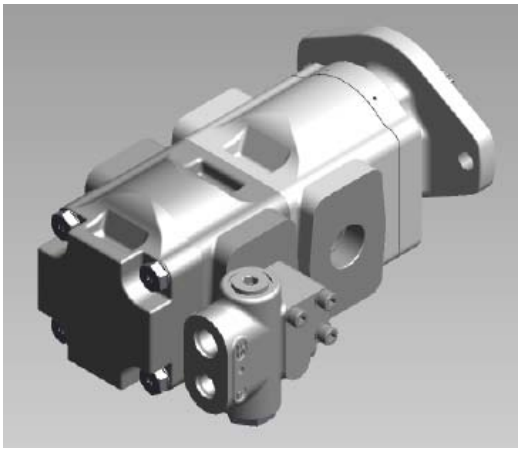

Tel: +45 63 12 83 00 | Email: ps@hymatik.com | www.hymatik.com | Hvidkaervej 27a, DK-5250 Odense SV, Denmark

Load Sensing Priority Valve

1VP- / CVP100- □ Port Configuration □ Port Orientation □ Function □ Priority Port □ Excess Port □ LS Port □ R/V Setting □ Control Setting LS

Code	Port Configuration
A	End Priority, End Excess
B	Side Priority, Side Excess
C	End Priority, Side Excess
D	Side Priority, End Excess
E	Double Side Ported

Code	Port Orientation
A	Priority Port on Pump Inlet Side
B	Priority Port on Pump Outlet Side

Code	Function
D	LSPV, Static LS
E	LSPV, Static LS with Pilot R/V
F	LSPV, Dynamic LS
G	LSPV, Dynamic LS with Pilot R/V

Code	Priority Port
J1	3/4-16UNF
J8	9/16-18UNF
T1	3/8 BSP

other on request

Code	Excess Port
J2	7/8-14UNF
J3	1-1/16-12UN
T2	1/2 BSP
T4	3/4 BSP

other on request

Code	LS Port
X2	7/16- 20UNF female
Y1	1/4 BSP male
Y3	1/4 BSP
BX2	7/16- 20UNF Body Port

other on request

Code	Control Setting LS
052	5.2 bar static
056	5.6 bar dynamic
062	6.2 bar dynamic
063	6.3 bar static
070	7.0 bar static / dynamic
090	9.0 bar dynamic
093	9.3 bar static
104	10.4 bar dynamic
126	12.6 bar dynamic
140	14.0 bar dynamic
186	18.6 bar dynamic

other on request

Code	R/V Setting
00	No Relief Valve
A05	Adjustable 40 - 120 bar
A15	Adjustable 130 - 250 bar
05	50 bar
08	80 bar
10	100 bar
11	110 bar
12	120 bar
13	130 bar
14	140 bar
15	150 bar
16	160 bar
17	170 bar
18	180 bar
20	200 bar

other on request

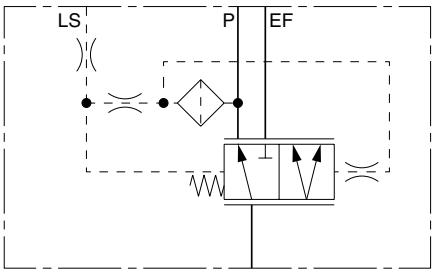

Load Sensing Priority Valve
with Dynamic Load Sensing Signal
Function “F”

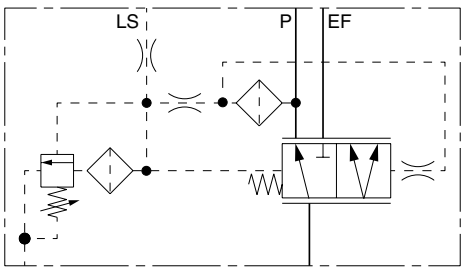

Load Sensing Priority Valve
with Dynamic Load Sensing Signal
Function “G”

Parker Hannifin
Pump and Motor Division
Chemnitz, Germany

Tel: +45 63 12 83 00 | Email: ps@hymatik.com | www.hymatik.com | Hvidkaervej 27a, DK-5250 Odense SV, Denmark

Load Sensing Priority Valve

Comments:

The Load sense Priority Valve provides priority flow on demand, typically for LS power steering: The balance of the flow produced by the pump is available from the EF port for additional functions such as open center directional control valves, fan drives , etc. When the power steering is idle, full pump flow is available for these functions

The selection of pilot relief and static or dynamic signal is dependent on the characteristics of the selected steering unit.

Variations for PGP 511 / 517 / 620 / 625 / 640

without pilot relief, dynamic LS signal (Function “G”) / with pilot relief,

dynamic LS signal (Function “F”) without pilot relief, static LS signal / with pilot relief, static LS signal

Pressure Range	
P-port Maximum	230 bar
EF-port Maximum	equal to max. rating of pump

Maximum Flows	
for PGP 511	
P-port	32 lpm
EF-port	70 lpm
max. input flow	70 lpm
for PGP 517 / 620 / 640	
P-port	45 lpm
EF-port	100 lpm
max. input flow	100 lpm

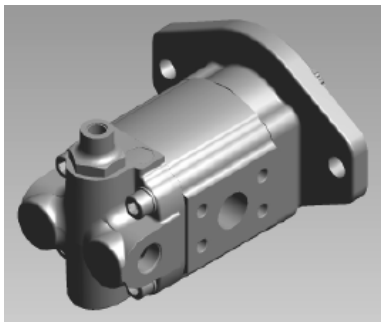

Port Confiiguration „B“
Port Orientation „A“

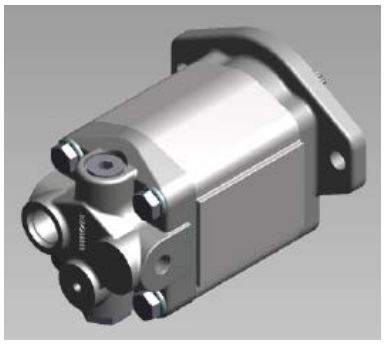

Port Confiiguration „D“
Port Orientation „B“



Port Confiiguration „E“
Port Orientation „A“

Single Pressure Relief Valve

Comments:
Integral relief valve to protect the motor.

Motors with this valve may be applied in series with relief valve providing a limit to the pressure differential, and hence, the output torque.

Variations for PGM 511 / PGM 620 / PGM 640

adjustable, with internal or external drain

Applications

Fan Drives, Mower Blade Drives, Compressor Drives and Water Pump Drives

Motor Range			
Ranges	PGM 511	PGM 620	PGM 640 .
Maximum Flow	75 lpm	113 lpm	113 lpm
Pressure Range	25-250 bar	25-280 bar	25-310 bar

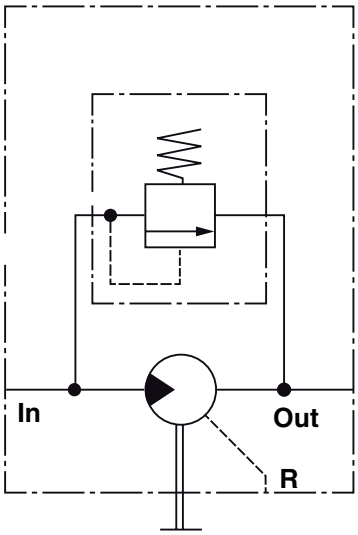

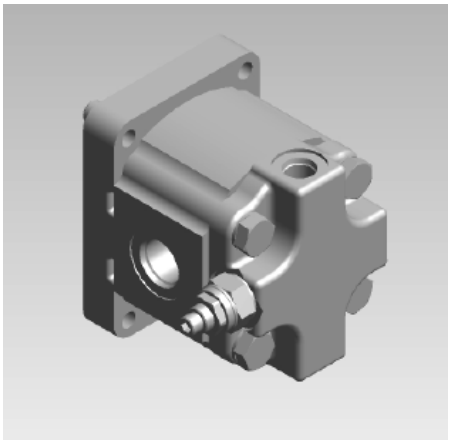

Tel: +45 63 12 83 00 | Email: ps@hymatik.com | www.hymatik.com | Hvidkaervej 27a, DK-5250 Odense SV, Denmark

Single Pressure Relief Valve with Anti-Cavitation

Comments:

Motors fitted with this relief valve may be applied in series with relief valve providing a limit to the pressure differential, and hence, the output torque.
The check valve allows the motor and driven load to “spool down” when the fluid supply is shut off or reduced due to engine speed fluctuations.
In series operation, the check valve permits the motor to come to a controlled stop should the outlet flow be suddenly blocked.
This valve reduces the risk of damaging the motor or blowing a hydraulic line.
Motors fitted with this valve are available with side or rear facing ports.

Variations for PGM 511 / PGM 620 / PGM 640

non-adjustable, with reverse flow check with internal or external drain

Applications

Fan Drives, Mower Blade Drives, Compressor Drives and Water Pump Drives

Motor Range PGM 511 / PGM 620 / PGM 640	
Pressure Range	35-250 bar
Maximum Flow	100 lpm

Motor Range PGM511 / PGM 620 / PGM 640	
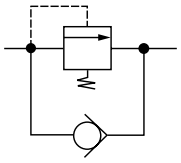	
CODE	**Pressure bar**
RMAF	50
RMAP	90
RMAR	100
RMAV	120
RMBB	150
RMBD	160
RMBK	190
RMBP	210
RMBT	230

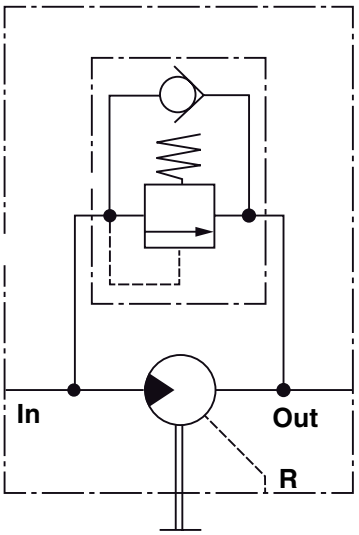



Tel: +45 63 12 83 00 | Email: ps@hymatik.com | www.hymatik.com | Hvidkaervej 27a, DK-5250 Odense SV, Denmark

Cross Port Pressure Relief Valves

Comments:
Integral cross port relief to protect motor and to limit torque in both directions of rotation.
Motors fitted with this relief valve cover may be operated in series with other motors downstream when using external case drain.
Limited change to the factory set is possible .
Side ports are standard in order to minimize overall length.

Variations for PGM 511 / PGM 620 / PGM 640

adjustable with internal and external drain

Applications

Fan Drives, Mower Reel Drives, and all low-medium power reversible drives

Motor Range			
Ranges	PGM 511	PGM 620	PGM 640 .
Maximum Flow	75 lpm	113 lpm	113 lpm
Pressure Range	25-250 bar	25-280 bar	25-310 bar

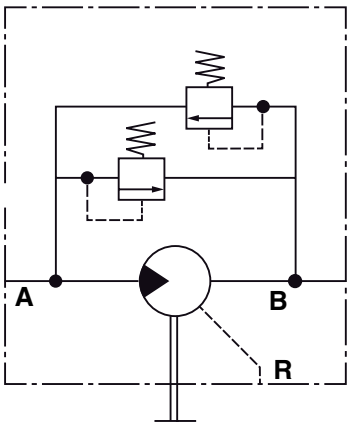



Tel: +45 63 12 83 00 | Email: ps@hymatik.com | www.hymatik.com | Hvidkaervej 27a, DK-5250 Odense SV, Denmark

Cross Port Pressure Relief Valves with Anti-Cavitation

Comments:
Motors fitted this relief valve may be applied in series or in hydraulic transmission with relief valve providing a limit to the pressure differential, and hence, the output torque.
The check valves allow flow to return to the inlet of the motor to prevent cavitation.
Motor available with side ports, rear ports or combination of side and rear ports.

Variations for PGM 511 / PGM 620 / PGM 640

non-adjustable with internal or external drain

Applications

Fan Drives, Mower Blade Drives, Water Pump Drives and reversible hydrostatic transmissions

Motor Range PGM 511 / PGM 620 / PGM 640	
Pressure Range	35-250 bar
Maximum Flow	100 lpm

Motor Range PGM 511 / PGM 620 / PG M640

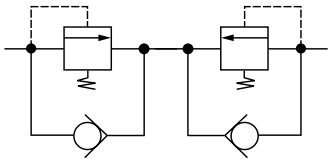

CODE	Pressure bar
RMCF	50
RMCP	90
RMCR	100
RMCV	120
RMDB	150
RMDD	160
RMDK	190
RMDP	210
RMDT	230

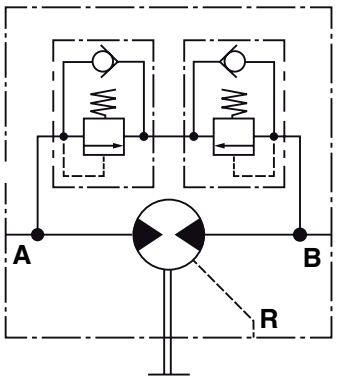



Parker Hannifin
Pump and Motor Division
Chemnitz, Germany

Tel: +45 63 12 83 00 | Email: ps@hymatik.com | www.hymatik.com | Hvidkaervej 27a, DK-5250 Odense SV, Denmark

Cross Port Pressure Relief Valves with Anti-Cavitation + Check Valves

Comments:
Motors with cross-port relief valve and anti-cavitation check valves in case drain passages are suitable for open-circuit applications with closed center valves and hydrostatic transmissions. The check valves allow flow to return to the inlet of the motor to prevent cavitation.
For winches, make up flow at low pressure is introduced at the case drain port.

Variations for PGM 511 / PGM 620 / PGM 640

non-adjustable, with reverse flow check with internal or external drain

Applications

Fan Drives, Mower Blade Drives, Water Pump Drives and reversible hydrostatic transmissions, vibration drives on vibratory, rollers and winches

Motor Range PGM 511 / PGM 620 / PGM 640	
Pressure Range	25-250 bar
Maximum Flow	100 lpm

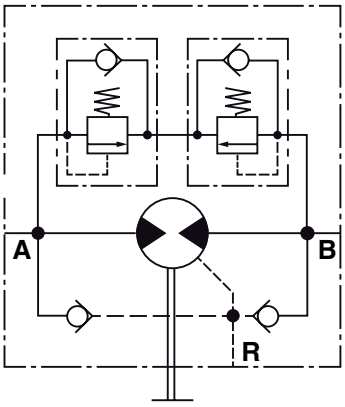



Tel: +45 63 12 83 00 | Email: ps@hymatik.com | www.hymatik.com | Hvidkaervej 27a, DK-5250 Odense SV, Denmark

Solenoid Proportional Pressure Relief Valve

Comments:
In a fan drive circuit fan speed is adjusted by providing a varying Pulse Width Modulated electrical current signal to the proportional relief valve which controls the flow to the fan motor. The proportional valve is typically a normal closed type to assure failsafe full fan speed in case of a lost signal.
The anti-cavitation check valve allows the motor to spin freely when the fan is powered down.

Variations for PGM 511 / PGM 620 / PGM 640

normally open valves, increasing pressure with increasing current
normally closed valves, decreasing pressure with increasing current with internal or tank return

Applications

Fan Drives

Motor Range			
Ranges	PGM 511	PGM 620	PGM 640 .
Maximum Flow	95 lpm	95 lpm	95 lpm

Pressure Range	
Pressure Range	standby pressure differential: 5 bar max. : equal to the max. pressure rating of the motor
Standard Pressure Relief Settings	100 / 210 / 350 bar other`s on request
Termination	on request

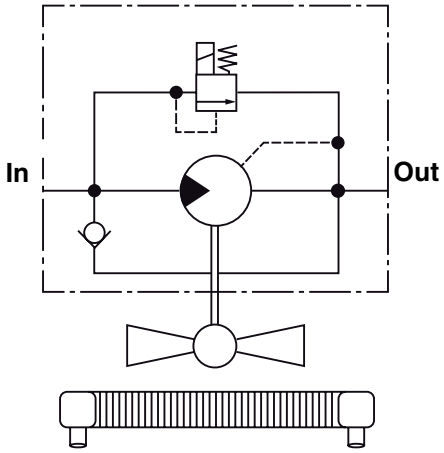

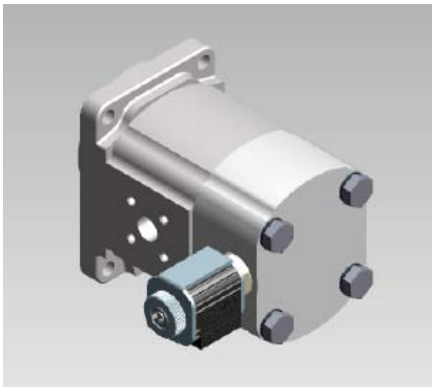

Tel: +45 63 12 83 00 | Email: ps@hymatik.com | www.hymatik.com | Hvidkaervej 27a, DK-5250 Odense SV, Denmark

Speed Sensor

This rugged, weather resistant speed sensor is a Hall effect device. When externally powered, 30 square wave digital pulses per output shaft revolution are produced. By signal multiplication, 60 pulses per revolution can be obtained. The installation of this economical sensor does not affect the torque or side load capability of the motor into which it is installed.
The sensor has reverse polarity protection but no short circuit protection.

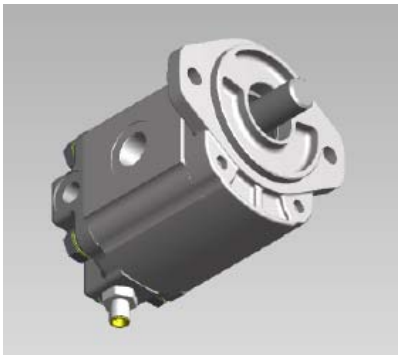

Speed sensor data	
Operating voltage range	4.5...24 V (DC)
Operating temperature	-30°...100° C
Operating frequency range	0...10 KHZ
Sink current	0...20 mA (max.)
Connection	4 Pin (12mm) DIN Standard

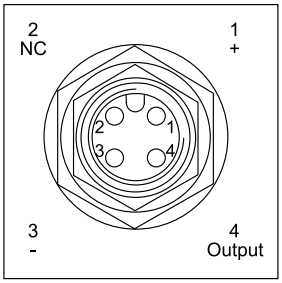

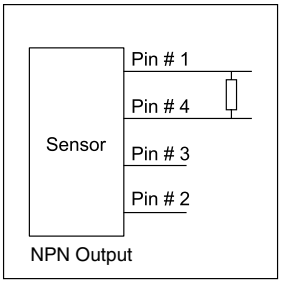

Formula pull-up resistor value (0.25 Watt, 5% tol.)

$$\frac{\text{Courant/Tensione } 4.5...24\text{ V}}{\text{Sink current } 0...20\text{ mA}} = \text{Resistor k Ohm}$$

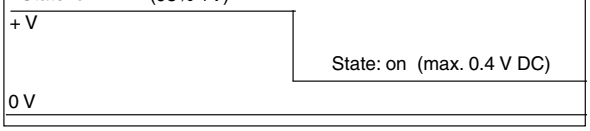

Tel: +45 63 12 83 00 | Email: ps@hymatik.com | www.hymatik.com | Hvidkaervej 27a, DK-5250 Odense SV, Denmark

Standard Seal Kits for pumps/motors 500 + 600

Model Code	Pump Series	TDN
PGP502	Single	391 1832 810
	Tandem	
	Single (FPM)	391 1832 811
PGP505	Single	391 1822 101
	Tandem	391 1822 102
PGP511	Single	8611-023-00N
	Single (Large size shaft)	8611-023-Q1N
	Single (FPM)	8611-023-00V
	Triple (FPM unsealed)	391 1832 770
	Tandem	8677-023-0NE
	Tandem rear	8677-023-000
	Triple PGP511	8832-023-0NX
	Tandem (sealed section)	3911832766
("S8F4")	Pump with outboard bearing	3911832133
PGP511S	Split gear	8801-023-00N
	Split gear (Large size sh.)	8801-023-Q1N
	Split gear (FPM)	8801-023-00V
	Split gear tandem rear	8850-023-000
PGP517	Single	391 1822 071
	Single FPM	391 1832 772
	Tandem	391 1822 072
	Triple	391 1822 073
	FPM 517/517/511/511	391 1832 772
PGP517 / PGP505	Tandem	391 1822 254
PGP517 / PGP511	Tandem	391 1822 531

SERIES 600	Pump Series	TDN
PGP620	Single	8682-023-00N
	Tandem rear	8833-023-000
	Tandem	4070H-023-000
	Tandem (FPM)	3911822474
	Single (FPM)	8682-023-00V
	Triple Pump	3911832610
PGP620	...T2K5...	3911832635
PGP625	Single (M)	3911842351
PGP620/PGP511	Tandem	8766-023-00N
PGP620/PGP511	Tandem (FPM)	8766-023-00V
PGP625/PGP511	Tandem (M)	3911842352
PGP620/ PGP511/511	Triple (sealed)	3911832720
PGP620/620/ PGP511	Triple (FPM)	3911832716
PGP640	Single	3911832598
PGP640	Single FPM	3911832611
PGP640	Tandem (M)	3911832696
PGP640/PGP511	Tandem (M)	3911832798
PGP640/620/620	Triple Pump	3911832468

Model Code	Motor Series	TDN
PGM502	Motor BI-ROT	391 1832 812
PGM505	Motor UNI-ROT	391 1822 101
	Motor BI-ROT	391 1801 304
M11 + Bearing	Motor BI-ROT + Bearing	3911801340
PGM511	Motor (Bi + Uni-Rot.)	8301-023-00N
	Motor(large size shaft)	8301-023-Q1M
("S2F3", "S8F4")	Motor with outboard bearing	3911832704
	Motor with plain bearing	8772-023-00S
	Motor FPM	8301-023-00M
	Motor FPM (large shaft)	3911832086
	Motor FPM with bearing	3911832087
PGM517	Motor UNI-ROT	3911801335
	Motor UNI-ROT FPM	3911801410
	Motor BI-ROT	3911801336

Model Code	Motor Series	TDN
PGM620	Motor (Bi + Uni-Rot.)	8782-023-00N
	Motor (Bi + Uni-Rot.)-FPM	8782-023-00V
PGM640	Motor (Bi+Uni-Rotat.)	3911801451

Tel: +45 63 12 83 00 | Email: ps@hymatik.com | www.hymatik.com | Hvidkaervej 27a, DK-5250 Odense SV, Denmark

Series PGP 640 Single Unit

PG P	640	A	0550	C	E4	A4	N	T5	T3	B1	B1

PGP	Gear Design / Type	PARKER Gear Pump
640	Series	
A	Unit	Single Unit
0550	Displacement	55.0 cm³/rev.
C	Rotation Direction	Clockwise
E4	Shaft	SAE „C“ Spline, 14T, 16/32 DP
A4	Flange	Mounting Flange SAE 4 bolt „C“
N	Shaft Seal	Shaft Seal NBR
T5	Side Suction Port	SAE Metric Split Flange 1 1/2"
T3	Side Pressure Port	SAE Metric Split Flange 1"
B1	Rear Suction Port	No Port
B1	Rear Suction Port	No Port

Series PGP 517 Single Unit

PG P	517	A	0230	A	D1	H3	N	L3	L2	B1	B1

PGP	Gear Design / Type	PARKER Gear Pump
517	Series	
A	Unit	Single Unit
0230	Displacement	23.0 cm³/rev.
A	Rotation Direction	Counter Clockwise
D1	Shaft	SAE „B“ Spline, 13T, 16/32 DP
H3	Flange	Mounting Flange SAE 2 bolt „B“
N	Shaft Seal	Shaft Seal NBR
L3	Side Suction Port	Ø27 Diamond Flange
L2	Side Pressure Port	Ø19 Diamond Flange
B1	Rear Suction Port	No Port
B1	Rear Pressure Port	No Port

Tel: +45 63 12 83 00 | Email: ps@hymatik.com | www.hymatik.com | Hvidkaervej 27a, DK-5250 Odense SV, Denmark

Series PGP 620 Single Unit

PG P	620	A	0330	C	D1	H3	N	D6	D5	B1	B1

PGP	Gear Design / Type	PARKER Gear Pump
620	Series	
A	Unit	Single Unit
0330	Displacement	33.0 cm³/rev.
C	Rotation Direction	Clockwise
D1	Shaft	SAE „B“ Spline, 13T, 16/32 DP
H3	Flange	Mounting Flange SAE 2 bolt „B“
N	Shaft Seal	Shaft Seal NBR
D6	Side Suction Port	1 5/16 - 12 UN Thread
D5	Side Pressure Port	1 1/16 - 12 UN Thread
B1	Rear Suction Port	No Port
B1	Rear Pressure Port	No Port

Series PGP 511 Tandem Unit

PG P	511	B	0100	A	C1	H2	N	J7	H3	S - 511	A	0110	X	J7	J5	B1	B1

PGP	Gear Design / Type	PARKER Gear Pump
511	Series	
B	Unit	Single Unit
0100	Displacement	10.0 cm³/rev.
A	Rotation Direction	Counter Clockwise
C1	Drive shaft	SAE 19-4 Spline 11T, 16/32 DP
H2	Flange	Mounting Flange SAE 2 bolt „A“
N	Shaft Seal	Shaft Seal NBR
j7	Side Suction Port	Ø - 20 mm European Flange
J5	Side Pressure Port	Ø - 15 mm European Flange
S	Section Connection	Separate Inlets
511	Series Second Section	
A	Unit	Single Unit
110	Displacement	11.0 cm³/rev.
X	Shaft Seal	No Seal
J7	Side Suction Port	Ø - 20 mm European Flange
J5	Side Pressure Port	Ø - 15 mm European Flange
B1	Rear Suction Port	No Port
B1	Rear Pressure Port	No Port

Tel: +45 63 12 83 00 | Email: ps@hymatik.com | www.hymatik.com | Hvidkaervej 27a, DK-5250 Odense SV, Denmark

Parker Worldwide

Europe, Middle East, Africa

AE – United Arab Emirates, Dubai
Tel: +971 4 8127100
parker.me@parker.com

AT – Austria, Wiener Neustadt
Tel: +43 (0)2622 23501-0
parker.austria@parker.com

AT – Eastern Europe, Wiener Neustadt
Tel: +43 (0)2622 23501 900
parker.easteurope@parker.com

AZ – Azerbaijan, Baku
Tel: +994 50 22 33 458
parker.azerbaijan@parker.com

BE/LU – Belgium, Nivelles
Tel: +32 (0)67 280 900
parker.belgium@parker.com

BG – Bulgaria, Sofia
Tel: +359 2 980 1344
parker.bulgaria@parker.com

BY – Belarus, Minsk
Tel: +48 (0)22 573 24 00
parker.poland@parker.com

CH – Switzerland, Etoy
Tel: +41 (0)21 821 87 00
parker.switzerland@parker.com

CZ – Czech Republic, Klecany
Tel: +420 284 083 111
parker.czechrepublic@parker.com

DE – Germany, Kaarst
Tel: +49 (0)2131 4016 0
parker.germany@parker.com

DK – Denmark, Ballerup
Tel: +45 43 56 04 00
parker.denmark@parker.com

ES – Spain, Madrid
Tel: +34 902 330 001
parker.spain@parker.com

FI – Finland, Vantaa
Tel: +358 (0)20 753 2500
parker.finland@parker.com

FR – France, Contamine s/Arve
Tel: +33 (0)4 50 25 80 25
parker.france@parker.com

GR – Greece, Athens
Tel: +30 210 933 6450
parker.greece@parker.com

HU – Hungary, Budaoers
Tel: +36 23 885 470
parker.hungary@parker.com

IE – Ireland, Dublin
Tel: +353 (0)1 466 6370
parker.ireland@parker.com

IT – Italy, Corsico (MI)
Tel: +39 02 45 19 21
parker.italy@parker.com

KZ – Kazakhstan, Almaty
Tel: +7 7273 561 000
parker.easteurope@parker.com

NL – The Netherlands, Oldenzaal
Tel: +31 (0)541 585 000
parker.nl@parker.com

NO – Norway, Asker
Tel: +47 66 75 34 00
parker.norway@parker.com

PL – Poland, Warsaw
Tel: +48 (0)22 573 24 00
parker.poland@parker.com

PT – Portugal
Tel: +351 22 999 7360
parker.portugal@parker.com

RO – Romania, Bucharest
Tel: +40 21 252 1382
parker.romania@parker.com

RU – Russia, Moscow
Tel: +7 495 645-2156
parker.russia@parker.com

SE – Sweden, Spånga
Tel: +46 (0)8 59 79 50 00
parker.sweden@parker.com

SK – Slovakia, Banská Bystrica
Tel: +421 484 162 252
parker.slovakia@parker.com

SL – Slovenia, Novo Mesto
Tel: +386 7 337 6650
parker.slovenia@parker.com

TR – Turkey, Istanbul
Tel: +90 216 4997081
parker.turkey@parker.com

UA – Ukraine, Kiev
Tel: +48 (0)22 573 24 00
parker.poland@parker.com

UK – United Kingdom, Warwick
Tel: +44 (0)1926 317 878
parker.uk@parker.com

ZA – South Africa, Kempton Park
Tel: +27 (0)11 961 0700
parker.southafrica@parker.com

North America

CA – Canada, Milton, Ontario
Tel: +1 905 693 3000

US – USA, Cleveland (industrial)
Tel: +1 216 896 3000

US – USA, Elk Grove Village (mobile)
Tel: +1 847 258 6200

Asia Pacific

AU – Australia, Castle Hill
Tel: +61 (0)2-9634 7777

CN – China, Shanghai
Tel: +86 21 2899 5000

HK – Hong Kong
Tel: +852 2428 8008

ID – Indonesia, Tangerang
Tel: +62 21 7588 1906

IN – India, Mumbai
Tel: +91 22 6513 7081-85

JP – Japan, Fujisawa
Tel: +81 (0)4 6635 3050

KR – South Korea, Seoul
Tel: +82 2 559 0400

MY – Malaysia, Shah Alam
Tel: +60 3 7849 0800

NZ – New Zealand, Mt Wellington
Tel: +64 9 574 1744

SG – Singapore
Tel: +65 6887 6300

TH – Thailand, Bangkok
Tel: +662 186 7000

TW – Taiwan, New Taipei City
Tel: +886 2 2298 8987

VN – Vietnam, Ho Chi Minh City
Tel: +84 8 3999 1600

South America

AR – Argentina, Buenos Aires
Tel: +54 3327 44 4129

BR – Brazil, Cachoeirinha RS
Tel: +55 51 3470 9144

CL – Chile, Santiago
Tel: +56 2 623 1216

MX – Mexico, Toluca
Tel: +52 72 2275 4200

Ed. 2016-04-04

© 2017 Parker Hannifin Corporation. All rights reserved.

Catalogue HY30-3300/UK. POD 06/2017, ZZ

EMEA Product Information Centre
Free phone: 00 800 27 27 5374
(from AT, BE, CH, CZ, DE, DK, EE, ES, FI, FR, IE, IL, IS, IT, LU, MT, NL, NO, PL, PT, RU, SE, SK, UK, ZA)

US Product Information Centre
Toll-free number: 1-800-27 27 537

www.parker.com/pmde

Your local authorized Parker distributor