hymatik





aerospace
climate control
electromechanical
filtration
fluid & gas handling
hydraulics
pneumatics
process control
sealing & shielding





Accumulator, Accessories and Spares Catalogue



ENGINEERING YOUR SUCCESS.

Tel: +45 63 12 83 00 | Email: ps@hymatik.com | www.hymatik.com | Hvidkaervej 27a, DK-5250 Odense SV, Denmark

Accumulator and Cooler Division Europe

Made in Europe - serving all markets and industries

Parker Wroclaw
(Wroclaw, Poland)

Products:
Coolers (All coolers)
Piston Accumulators (ACP, A, AP)

Market Focus:
Industrial, Mobile, Energy



Parker ACDE Sandycroft
(Chester, UK)

Products:
Bladder Accumulators & Accessories (UK, O&G)
Piston Accumulators (EHP)
Pulsation Dampers, Hydracushions, Compensators

Market Focus:
Oil and Gas, Industrial



Parker ACDE Paris
(Colombes, France)

Products:
Bladder Accumulators & Accessories (EBV, EHV)
Diaphragm Accumulators (DA)
Attenuators

Market Focus:
Wind Power, Industrial, Aerospace, Motor Sport



Parker ACDE Leini
(Turin, Italy)

Products:
Bladder Accumulators & Accessories (EBV, EHV)
Piston Accumulators (EHP)
Gas Bottles, Accumulator Systems

Market Focus:
Oil and Gas, Industrial



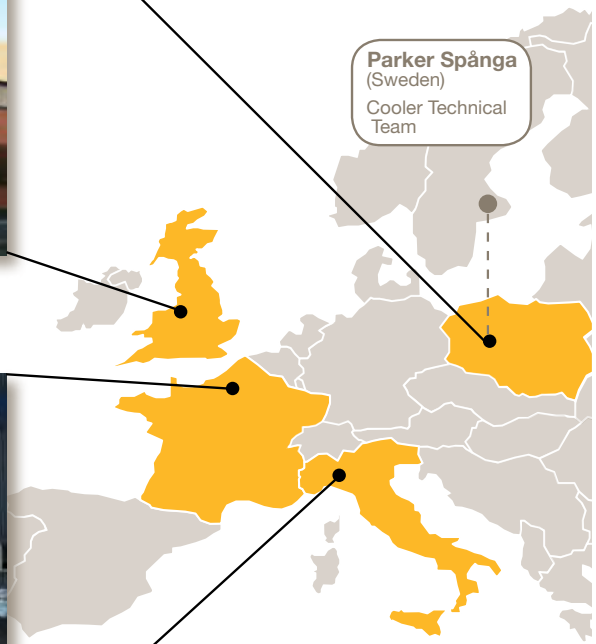

Tel: +45 63 12 83 00 | Email: ps@hymatik.com | www.hymatik.com | Hvidkaervej 27a, DK-5250 Odense SV, Denmark

Accumulator Products

The complete accumulator range



Bladder Accumulators



Piston Accumulators



Diaphragm Accumulators



Pulsation Dampers



Attenuators



Gas Bottles



Accumulator Systems



Accessories



Services & Support

Tel: +45 63 12 83 00 | Email: ps@hymatik.com | www.hymatik.com | Hvidkaervej 27a, DK-5250 Odense SV, Denmark

PARKER SAFETY GUIDE FOR SELECTING AND USING ACCUMULATORS AND RELATED ACCESSORIES

WARNING

FAILURE OR IMPROPER SELECTION OR IMPROPER USE OF THE PRODUCTS AND/OR SYSTEMS DESCRIBED HEREIN OR RELATED ITEMS CAN CAUSE DEATH, PERSONAL INJURY AND PROPERTY DAMAGE.

This document and other information from Parker Hannifin Corporation, its subsidiaries and authorized distributors provide product and/or system options for further investigation by users having expertise. It is important that you analyze all aspects of your application, including consequences of any failure and review the information concerning the product or system in the current product catalogue. Due to the variety of operating conditions and applications for these products or systems, the user, through its own analysis and testing, is solely responsible for making the final selection of the products and systems and assuring that all performance, safety and warning requirements of the application are met.

The products described herein, including without limitation, product features, specifications, designs, availability and pricing, are subject to change by Parker Hannifin Corporation and its related companies at any time without notice.

Tel: +45 63 12 83 00 | Email: ps@hymatik.com | www.hymatik.com | Hvidkaervej 27a, DK-5250 Odense SV, Denmark

Contents

General Information Accumulators		
Accumulator function and benefits		6
Operating Principle		7
Technologies and History		8
Services		9
How to Size		10
Parker Tracking System (PTS)		11
Technical Support and Product Innovation		12
Service Centre and Distribution Network		14
Regulations and Approvals		15
Online Support		16
Bladder Accumulators	Typical Market Applications	
Low Pressure - EBV Series (0.5 to 575 Litres, 20 to 80 bar)	Energy/ Process/ Marine	17
High Pressure - EHV Series (0.2 to 57 Litres, 70 to 690 bar)	Industrial/ Energy/ Marine/ Mobile	39
Accumulator Regulations and Protections (EBV and EHV)		77
High Pressure - UK Industrial Series (0.16 to 54 Litres, 207 to 420 bar)	UK Industrial	89
High Pressure - O&G Series (0.16 to 54 Litres, 207 to 760 bar)	Oil & Gas	95
Piston Accumulators		
Crimped Piston Accumulator 40 to 150mm Bore- ACP Series (0.08 to 8 Litres, up to 275 barl)	Mobile/ Renewable/ Industrial	109
Piston Accumulator 50 to 200mm Bore - A Series (0.05 to 300 Litres, 250 & 350 barl)	Industrial/ Marine/ Mobile/ Construction	121
Piston Accumulators 180 to 360mm Bore - AP Series (6 to 300 Litres, 250 & 350 bar)	Plastic Injection Moulding	131
Die Casting Piston Accumulator 180 & 250mm Bore DC Series 6 to 80 Litres, 250 & 350 bar)	Die Casting/ Plastic Injection Moulding	139
EHP Series (0.1 to 1000 Litres, up to 350 bar)	Energy/ Process	145
Pulsation Damper Accumulators		
Silicone Filled Bladder Accumulator - SBV3 Series	Fuel Systems	177
Stainless Steel & Polypropylene APD/ BPD/ CPD/ DPD Series		183
Attenuators - SH Series	Hydraulic Pump Systems	195
Diaphragm Accumulators - DA Series	Mobile/Industrial	201
Accessories		
Clamps/ Brackets/ Lifting Eye/ Mounting Frames/ Charging Sets/ Safety Block/ Burst Discs	All Markets	219
Gas Bottles		259
Accumulator Stations		269
Sizing Questionnaires		273

Tel: +45 63 12 83 00 | Email: ps@hymatik.com | www.hymatik.com | Hvidkaervej 27a, DK-5250 Odense SV, Denmark

Installing an accumulator can save you time and money



Applications

The Parker ACDE gas loaded accumulator is an essential component for the optimum operation of a hydraulic circuit. In hydraulic circuits, the accumulator enables:

Energy Storage: saves energy without loss and redistributes when required therefore reducing installed power.

Pressure compensation: absorbs pressure spikes from pumps or other components to control pressure and flow-rates in a hydraulic circuit.

Volume Control: absorbs fluid volume variations induced by temperature changes in a closed hydraulic circuit and maintains a rated pressure.

Maintains Fluid Flow Rate: an accumulator can maintain the fluid flow rate in case of pump failure and can also be used as a mobile fluid reserve under pressure.

Emergency Energy Storage: in case of failure of the main energy source, an accumulator can provide sufficient energy to complete an operation or to realize a full hydraulic cycle.

Prevents mixing of fluids: Transfer of energy from a fluid to another fluid without any risk of mixing

Shock absorber: suppresses shocks and vibrations in hydraulic systems of lifting vehicles (e.g. Forklift trucks) and maintains real suspension of the load on a gas spring.

Accumulators - Advantages / Your benefits

- **Reduction in working costs**
  - Energy reserve
  - Reduces installed electrical power
- **Increases lifetime of equipment**
  - Reduces pulsations
  - Protects against pressure peaks
- **Reduction in maintenance costs**
  - Reduces wear of hydraulic components
  - Requires minimum maintenance
- **Emergency Energy Back-up**
  - Energy reserve



Tel: +45 63 12 83 00 | Email: ps@hymatik.com | www.hymatik.com | Hvidkaervej 27a, DK-5250 Odense SV, Denmark

Accumulator Operating Principle

Operation of the gas loaded bladder accumulator is based on the considerable difference in compressibility between a gas and a liquid, enabling a large quantity of energy to be stored in an extremely compact form. This enables a liquid under pressure to be accumulated, stored and recovered at any time.

Bladder Accumulator

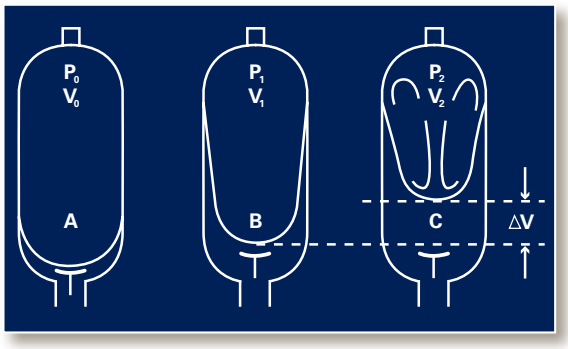

A - Bladder in the Pre-charge position, which means that the accumulator only contains nitrogen. The anti-extrusion system closes the hydraulic orifice which prevents the destruction of the bladder. In low pressure accumulators the bladder rests against the grid. Maximum pressure differential (P2/P0): 4:1

B - Position at the minimum operating pressure. There must be a certain amount of fluid between the bladder and the hydraulic orifice, such that the anti-extrusion system does not close the hydraulic orifice.

C - Position at the maximum operating pressure. The volume difference between the minimum and maximum positions of the operating pressures represents the working fluid quantity.

Piston Accumulator

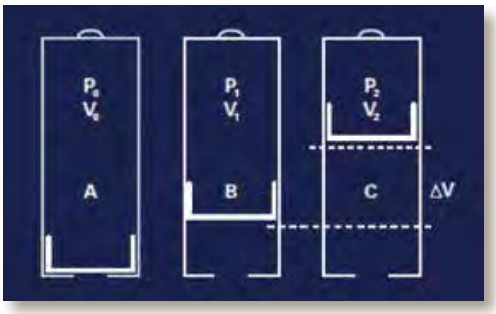

When fluid under pressure enters the fluid side of the accumulator, the piston is pushed towards the gas side and the Nitrogen gas is compressed.

Diaphragm Accumulator

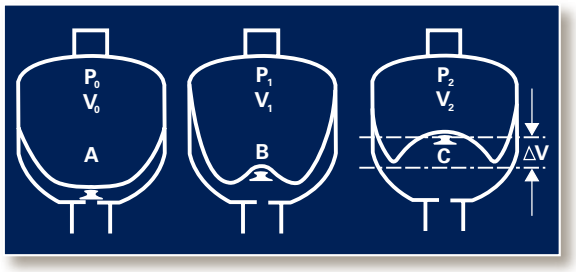

A - The diaphragm is in the Pre-charge position, which means that it is only filled with nitrogen. The knob closes the hydraulic orifice and prevents the destruction of the diaphragm.

B - Position at the minimum operating pressure : there must be a certain amount of fluid between the diaphragm and the hydraulic orifice, such that the knob does not close the hydraulic orifice.
Thus, P0 must always be < P1.

C - Position at the maximum operating pressure: the volume change Δ V between the minimum and maximum positions of the operating pressures represents the fluid quantity stored.

Key:-

V0 = Capacity in nitrogen of the accumulator

V1 = Gas volume at the minimum hydraulic pressure

V2 = Gas volume at the maximum hydraulic pressure

ΔV = Returned and/or stored volume of working fluid between P1 and P2

P0 = Initial preload of the accumulator

P1 = Gas pressure at the minimum hydraulic pressure

P2 = Gas pressure at the maximum hydraulic pressure

Tel: +45 63 12 83 00 | Email: ps@hymatik.com | www.hymatik.com | Hvidkaervej 27a, DK-5250 Odense SV, Denmark

Experts in accumulator technologies

With over 50 years experience we have worked with customers from a diverse range of markets and applications which has enabled us to gain **extensive knowledge** and **expertise in accumulator technologies**.

We often work closely with our customers to provide solutions for hydraulic systems helping customers to enhance the longevity of their parts and systems whilst also improving **efficiency** and **output**.

Offering a comprehensive range of bladder, piston and diaphragm accumulators, regulations and approvals, we can supply accumulators to suit **any requirement** and for **any geographic location**.



Our History

Olaer, pioneer of high pressure equipment, was founded in 1938 by Jean Mercier. Using his experience, passion for research and extensive knowledge of hydraulics in the demanding field of aeronautics, Mr. Mercier engineered the first gas loaded bladder accumulator. This has lead to Olaer becoming the indisputable international leader in this field.



In 1987 Fawcett Engineering and Christie Hydraulics (both in the UK) became part of the Olaer Group and merged to become Fawcett Christie Engineering.

The Olaer Group continued to expand over the next 25 years and established a worldwide manufacturing and supply network.

Parker Hannifin acquired the Olaer Group in 2012 and the Accumulator and Cooler Division Europe was established.

Now part of one of the world's leading manufacturing companies the Accumulator and Cooler Division Europe continues to develop new products and services and offers a comprehensive accumulator product range suitable for any market or application.

Tel: +45 63 12 83 00 | Email: ps@hymatik.com | www.hymatik.com | Hvidkaervej 27a, DK-5250 Odense SV, Denmark

Services - easy to do business with



Parker Tracking System (PTS)

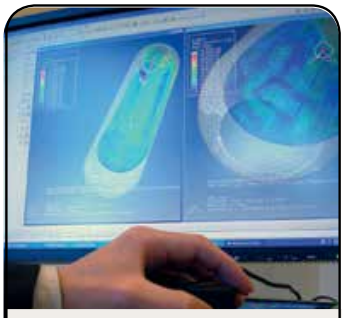

Technical Support & Product Innovation



Regulations & Approvals Portal





Accumulator Sizing Software



Online Support



Recertification Centres & Distribution Network

Tel: +45 63 12 83 00 | Email: ps@hymatik.com | www.hymatik.com | Hvidkaervej 27a, DK-5250 Odense SV, Denmark

How to size an accumulator

Accumulator Sizing Software

www.parker.com/acde

Parker Olaer has developed very sophisticated simulation software to optimise accumulator sizing recommendations.

Calculations are based on the real gas equation and real gases. The software allows for temperature and flow characteristics and has an intuitive Windows format that is easy to use!



The behaviour of accumulators used in applications such as pulsation dampening, surge arrestor, thermal expansion and energy storage can be simulated.

The latest version of the sizing software can be downloaded from our website.

Sizing Questionnaires

Customers can complete a sizing questionnaire and send this to the local Parker Sales Office so that the most efficient accumulator can be sized for your application.

You can download the sizing questionnaires from our website www.parker.com/acde or click on the links below if you are viewing a digital version of this document.

There are 4 questionnaires to select from:-

1. Energy Storage - LINK

2. Thermal Expansion in a closed circuit - LINK

3. Surge Arrestor / Waterhammer - LINK

4. Pulsation Damper - LINK

DATA SHEET Application : ENERGY STORAGE

Date:

Company Name:	**Contact Name:**
Market Segment: *expl. O&G, Distribution, Marine, Industrial, Offshore, Service*	**E-mail:**
Address:	**Telephone:**
Website:	

SIZING DATA

Describe application: **Please attached system scheme**			
Fluid Type:			
Volume of Fluid to be restored:			Ltr.
Dual Time (Charge-Stabilisation-Discharge):			Sec
Maximum Working Pressure (P2):			Bar
Minimum Working Pressure (P1):			Bar
Fluid Temperature during Operation:	Min. °C		Max. °C
Certification:			

TECHNICAL SPECIFICATION OR SPECIAL REQUIREMENTS HAVE TO BE FILLED IN

- Material options :
- Special Port Connections and adaptors :
- Special Coatings :
- End user country :

If there is no special requirement, we will offer standard connection and material according to the fluid and PED 97/23/EC (**)

Tel: +45 63 12 83 00 | Email: ps@hymatik.com | www.hymatik.com | Hvidkaervej 27a, DK-5250 Odense SV, Denmark

Parker Tracking System (PTS)

The PTS service for accumulators is designed to reduce equipment and machinery downtime by increasing the speed of acquiring replacements. All relevant product documentation can also be accessed via the PTS service including precharge, maintenance, approvals and recertification information.

The Parker Tracking System is available via an app which can be downloaded to your computer or portable device making it easy to access.

Available for:-
- **Desktops**
- **Laptops**
- **Tablets**
- **Smart-phones**



www.parker.com/pts

Faster, easier and more accurate spare parts replacement



PTS Mobile

PTS is available wherever you go via the PTS Mobile app. This free app from Parker makes it faster, easier and more accurate than ever before to get the replacement components you need.

Tel: +45 63 12 83 00 | Email: ps@hymatik.com | www.hymatik.com | Hvidkaervej 27a, DK-5250 Odense SV, Denmark

Technical Support & Product Innovation

Technical Support

We are able to offer an unrivalled depth of experience and expertise in the hydraulics industry. A continuous programme of research and development and strict quality controls help us to maintain our leading position in the market.

Design Facilities

A dedicated technical team uses the latest 3D SolidWorks and Autodesk Inventor software driven by calculation programs (linked to EN14359, PD5500 and ASME VIII) to reduce design times and provide technical customer support.

Hydraulic Testing

In order to develop new and improved products we provide testing facilities for specific applications and accumulator technologies. These test facilities help us to gain in-depth knowledge on product performance, material durability and the expected lifetime of our units in different operational environments.

Qualification Tests

We can offer qualification tests on all of our new accumulators if required. These tests include

- **Long duration pressure hold tests**
- **External pressure tests**



Product Innovation
As part of our product development programme we seek new ways to innovate, collaborate and partner with our customers to address engineering challenges and solve problems.

COMING SOON!

SensoNODE™ for Accumulators
Long Range Wireless Sensor for Measuring Accumulator Pre-Charge

Parker SensoNODE™ for Accumulators Bluetooth-powered sensors are specifically designed for accumulators. Compact, energy-efficient, and wireless, they are designed to provide simple and easy solutions for measuring gas pre-charge on bladder and piston style accumulators.

These sensors allow for hands off pre-charge pressure and temperature measurement to prevent the damage and/or downtime associated with pre-charge loss.





SensoNODE™

CE



Accumulator test bench for wind turbine application.



Piston accumulator hydraulic test facility.

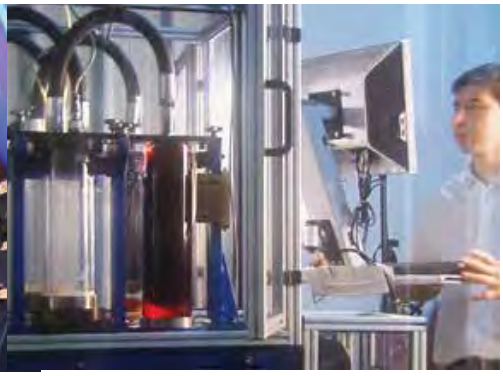

Bladder accumulator test bench - Patented technology

Materials
Parker can offer a wide range of options for the 3 key accumulator technologies (bladder, piston and diaphragm) depending on the application where the product is used. The most important parameters for selecting an accumulator are:

1. **The application**
2. **The minimum and maximum operating temperature of the system.**
3. **The fluid type in the system**
4. **Working Pressure.**

Shell material options include standard carbon steel, alloyed steel, stainless steel, aluminium, titanium and composites. The main requirement is that the material is suitable and approved for use in pressure vessels.
The elastomers used are the key working components, and also where we have focused resources selecting the correct type and material.

Depending on the customer application, our engineers will choose the most optimum solution.

Taking into account the different needs of various applications Parker proposes different corrosion protections external or internal: bare metal, electroless nickel plating, standard primer, epoxy paint and Rilsan.



Tel: +45 63 12 83 00 | Email: ps@hymatik.com | www.hymatik.com | Hvidkaervej 27a, DK-5250 Odense SV, Denmark

Service Centre & Distribution Network

Europe, Middle East & Africa

Parker Hannifin has developed a network of trained competent persons within Authorized Recertification/Service Centres in most EMEA countries.

Services include:-

- **Preparation of Written Schemes of Examination**
- **Accumulator maintenance, testing and repair**
- **Hydraulic system troubleshooting**
- **Stock of spare parts**

Parker Authorized Recertification Centres are fully trained and offer a wealth of experience in the Parker accumulator product range.

We have established a fully trained and certified accumulator service network in most European countries

The service centres have specialized equipment ready for works which can be provided in-house, on-site or in the field* (location).

*services available at some service centres.





Helping our customers:-

- **Minimise system down-time**
- **Increase efficiency**
- **Reduce the complexity of documentation.**

Regulations & Approvals

Parker designs and manufactures gas loaded accumulators for use in all countries, as well as other industry specific approvals including Oil & Gas, Naval and Nuclear. The main regulations in force are PED for European market, ASME for US market and SELO for Chinese market.

As a service, Parker Olaer can recommend the appropriate regulations applicable if customers know the country where the accumulator will be installed. When operating in dangerous and explosive environments, Parker has developed high-tech solutions. Some of these regulations call for the use of safety devices to protect the accumulator against over pressure. Solutions may include hydraulic safety blocks, relief valves or gas side safety devices such as burst discs and fuse plugs. Parker has designed and proposed a complete range of safety devices suitable for the applicable regulations.

To meet the needs of our customers, Parker can supply accumulators with multiple approvals. With regard to environmental concerns Parker's product range complies with REACH regulations. Each accumulator is delivered with the certificate of conformity. Documents can be accessed at any time and from any location.



www.parkeracde-certificatesportal.com

Do you need multi-international certification?

The Global Bladder Accumulator Series

Multi-international certification

In April 2017 Parker launched the first global accumulator offering multi-international certification (SELO, ASME & CE) as well as improved technology and design.

Only 11 countries in the world are not covered by this multi-international certification.

All regulations have been combined which has significantly reduced the amount of part numbers and complexity of documentation therefore providing a significant reduction of cost and resources for your design and logistic departments.

All of the global accumulators will have a unique code so that you can benefit from the Parker Tracking System (PTS).

SELO, ASME & CE



Tel: +45 63 12 83 00 | Email: ps@hymatik.com | www.hymatik.com | Hvidkaervej 27a, DK-5250 Odense SV, Denmark

Online Support

www.parker.com/acde

You can find the latest product information on the Parker website, parker.com/acde.

Designed to be accessible via desktops, tablets and smart phones you can download sizing software, e-configurators, manuals and 3D models.

You will also find all of our latest brochures and catalogues on the website.

In addition to our hydraulic accumulators and accessories we also provide a range of air oil and water oil coolers and accessories.





hymatik





aerospace
climate control
electromechanical
filtration
fluid & gas handling
hydraulics
pneumatics
process control
sealing & shielding





EBV Series
Bladder Accumulators

EBV Series, up to 80 bar



Parker OLAER

ENGINEERING YOUR SUCCESS.

Tel: +45 63 12 83 00 | Email: ps@hymatik.com | www.hymatik.com | Hvidkaervej 27a, DK-5250 Odense SV, Denmark

Description

Designed for LOW pressure fluid systems, Parker EBV/ IBV bladder accumulators are ideally suited for the Energy, Process & Marine Markets. Available in volumes 0.5 to 575 Litres, in carbon steel (20 to 80 bar), and in stainless steel (20 to 40 bar).

The EBV bladder accumulator offers a reliable and efficient solution for water hammer arrestor, thermal expansion, energy storage and pulsation dampening . Utilizing comprehensive tools and resources including an applications database, CAD/CAM, finite element analysis, reliability studies and simulation we have optimized the design and performance of the accumulator.

A high volume solution (up to 4000 litres) has been specially developed for energy storage and thermal expansion. Parker Olaer bladder accumulators are suitable for use in more than 35 countries (all hydraulic accumulators for Europe are CE marked) and they can meet an extensive range of international and industry approvals.

The standard EBV bladder accumulator has a female threaded fluid port or optional flange fluid port with different flange design standards.

Rigorous product testing and continuous product development help to ensure our hydro-pneumatic accumulators operate at optimum efficiency and can perform in the most demanding environments.

Parker accumulator accessories such as safety blocks, charging sets, brackets & clamps, adaptors and flanges, lifting eyes, bladder kits, can aid the safe installation and operation of the accumulators in any hydraulic system.

Parker Olaer have developed very sophisticated simulation software to optimize sizing recommendations for hydraulic accumulators. You can download the accumulator sizing software from www.Parker.com/acde.

Features/Benefits

- **Extensive range of international and industry approvals/standards (PED 2014/68/EU, ATEX 2014/34/EU, ASME VIII div 1, SELO, CRN, AS1210, NR13, CUTR, DNV, BV Marine, ABS and GL).**
- **Suitable for Fluid Groups 1 & 2.**
- **Available in carbon and stainless steel (304, 316, 316L).**
- **Rigorous product testing and continuous product development.**
- **Parker Olaer offers a wealth of product knowledge and experience thus enabling us to provide first class technical support and customer service.**
- **A large selection of materials and fittings enable us to provide complete low pressure systems to suit every application.**
- **The EBV bladder accumulator can provide an instantaneous response.**

Markets

- **Industrial**
- **Defence**
- **Energy**
- **Marine**
- **Mining**
- **Oil and Gas**
- **Processing**
- **HVAC**
- **Industrial Chemical Processing**

Applications

- **Hydraulic Power Units**
- **Lubrication Systems**
- **Power Generation**
- **Energy Transmission & Distribution**
- **Defence**
- **Plumbing**
- **Refrigeration**
- **Heating**

Technical Specifications

The accumulator comprises a forged or welded steel shell, a rubber bladder and anti-extrusion system.

Pressure: Maximum working pressure: (PS) = 40 bar. Operating pressure (OP): 14 to 80 bar.

Volume: from 0.5 to 575 Litres

Shell Material: Options include; alloyed steel, stainless steel, aluminium, titanium and composites.

Bladder Materials: Various bladder materials available which are compatible with a wide range of fluids and temperatures.

Anti-extrusion System: perforated bushing.

Approvals: PED 2014/68/EU, ATEX, ASME VIII div 1, SELO, CUTR, DNV, BUREAU VERITAS MARINE, ABS, Germanischer Lloyd's.

Specials: - For special constructions please consult Parker.

Maximum pressure differential (P2/P0): 4:1

Nitrogen gas pressure : Never precharge accumulators at a pressure exceeding 20 bar at maximum working temperature with nitrogen purity > 99,8% N2 class 2.8

Accumulator working temperature determination example :

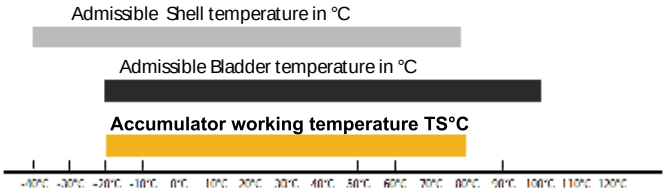

Tel: +45 63 12 83 00 | Email: ps@hymatik.com | www.hymatik.com | Hvidkaervej 27a, DK-5250 Odense SV, Denmark

Spare Parts

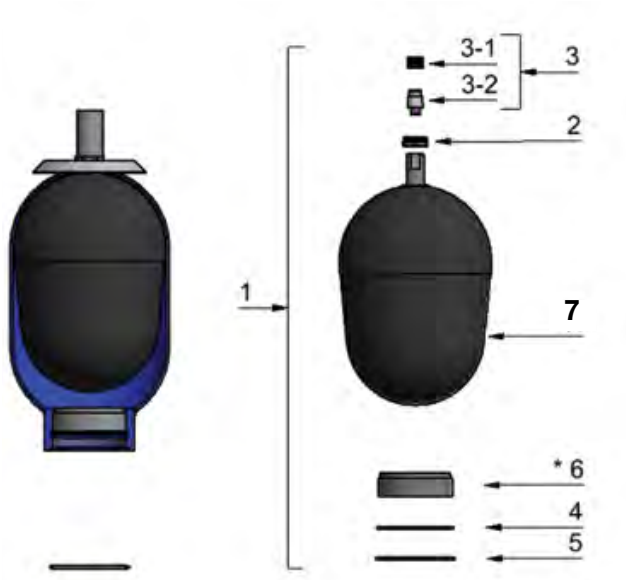

Item	Spare parts
1	Spare Parts Kit
2	Valve nut
3	Gas valve Assembly
3.1	Gas valve
3.2	Gas valve plug
4	Snap ring
5	Sealing ring
6*	Bushing assembly
7	Bladder

* These parts are not delivered in the spare parts kit (complete repair kit)

Installation

Position: Preferably vertical (liquid connection downwards) to horizontal, depending upon application. If the accumulator is installed in any position other that vertical with fluid port down, contact Parker. The accumulator could have reduced volumetric efficiency and Parker can help you to take these factors into account.

Mounting: A 200mm clearance is required above the accumulator to allow for gas charging. Each accumulator is delivered with a user instructions manual.
Nitrogen gas pressure: If not specified, the accumulator will be deliver with a storage pressure between 2 and 5 bar.

Safety instruction : Never precharge accumulator at a precharge pressure exceeding 20 bar at maximum working temperature or limited to the pressure of the shell if under 20 bar.



EBV Series: How to order a low pressure accumulator

EBV 10- **40** /90-**A**25**G**A-**2**00/**020**

Product Type
EBV: Low pressure bladder
ETBV: Low pressure transfer bladder

Volume in L (up to 3 Characters)
0,5 - for 0,5 Liter
20 - for 20 Liters
100 - for 100 Liters

Maximum Working Pressure
20 - for 20 bar max working pressure
40 - for 40 bar max working pressure
80 - for 80 bar max working pressure
* - If the product is not CE, use highest MWP according to regulation relevant to the product (see Approvals PAGES 82&83)

Approvals*
00 According to PED2014/68/EU, article 4.3
11 According to PED2014/68/EU + BV Marine
13 According to PED2014/68/EU, article 4.3 + BV Marine
15 According to ASME VIII div 1
23 According to PED2014/68/EU, article 4.3 + ABS
24 According to PED2014/68/EU + DNVGL
41 According to PED2014/68/EU + ABS
43 According to PED2014/68/EU, article 4.3 + ABS
71 According to CUTR 032/2013
83 According to PED2014/68/EU + AS1210
85 According to PED2014/68/EU, article 4.3 + SELO
88 According to PED2014/68/EU + SELO
90 According to PED2014/68/EU
AA According to PED2014/68/EU + NR13
AE According to ASME VIII div 1 + NR13
AU According to ASME VIII div 1 + CUTR 032/2013
* - (Please refer to Approvals PAGES 82&83)

Material (Shell and Fluid Port)
A - All parts in carbon steel with Epoxy paint for shell only [-20°C;+130°C]
B - Carbon Steel shell + Internal Protection Epoxy 80 µm + stainless steel fluid port and valve
C - Carbon Steel shell + Int- Ext Protection Kanigen 50 µm + stainless steel fluid port and valve
D - Carbon Steel shell + Int- Ext Protection Blue Rilsan 200-300 µm + carbon steel fluid port and valve
E - Carbon Steel shell + stainless steel fluid port and valve
F - Carbon steel shell + Internal Protection Teflon 40-50 µm
I - All parts in stainless steel [-40°C;+80°C]
R - Carbon Steel shell + Int- Ext Protection Blue Rilsan 200-300 µ + stainless steel fluid port and valve
Z - Special

Bladder Mix
02 - For Mix 02 [-32°C;+115°C] Hydrin C
10 - For Mix 10 [-30°C;+80°C] Nitrile Low Temperature
20 - For Mix 20 [-6°C;+100°C] Nitrile Heavy Duty
25 - For Mix 25 [-20°C;+100°C] Nitrile standard
30 - For Mix 30 [-5°C;+115°C] Nitrile Low Permeability
35 - For Mix 35 [0°C;+130°C] Nitrile high temperature
37 - For Mix 37 [-59°C;+110°C] Nitrile Extreme Low Temp
40 - For Mix 40 [-15°C;+120°C] Butyl
47 - For Mix 47 [-40°C;+120°C] EPDM
80 - For Mix 80 [-20°C;+140°C] Viton

Fluid Port Configuration
K - Gas cyl. 2"(max flow rate : 450 L/min, 0,5 to 5L only)
L - Gas cyl. 3"1/2 (max.flow rate : 300L/min)
P - Metric M 205x3 (3000L/min)
Z - Special

Gas Valve Configuration
0 - No gas valve
A - Gas Valve Type - 5/8"- 18 UNF
B - Gas Valve Type - 7/8"- 14 UNF
C - Gas Valve Type- 7/8" -14 UNF integrated
D - Gas Valve Type - 5/8"- 18 UNF integrated
Z - Special

Fluid Type
0 - Not applicable
1 - Fluid Type 1 CE Fluid Group 1
2 - Fluid Type 2 - CE Fluid Group 2

Special
00 - No Special features or configuration
EX - ATEX
EZ - ATEX with other special configuration
SP - Special painting
D1 - Standard documentation + Leak test report
D2 - Standard documentation + Descriptive statement + Design calculation note
ZZ - Special configuration or several options

Precharge @ 20°C in Bar
When at storage pressure (Keep empty)*
20 - From 0 to 20 Bar precharge MAXI example
*Parker precharge accumulator with 2 Bar for storage

EBV Series 40, 50 & 80 bar, 0.5 to 200 Litres

Standard version (**Carbon Steel** shell/NBR mix) compatible with mineral oils (2). According to PED 2014/68/EU, Fluid Group 2 (3)

Part numbers, Accessories, Dimensions

Type Part number	Valve see drawing	Adaptor Threaded	Flange Model	 Model	Clamps Model (quantity) Part number	Support Bracket Model Part number	Lifting Eye on gas side Model Part number	Complete Repair KIT Model Part number
EBV 0.5-50/00-A25KD-200* 10383101125	D	G 1" cyl 04557000223	1½" ANSI 150 lbs 04542000123		E95 (1) 20250803648			KIT EBV 0.5-50/00-A25GD 19002900225
EBV 1-80/00-A25KC-200* 10909801125	C	G 1" cyl 04557000223	1½" ANSI 150 lbs 04542000123	1½" ANSI 300 lbs 04524100123	E114 (1) 20251003648	CE 89 20151903620		KIT EBV 1-80/00-A25GC 19044300225
EBV 2.5-80/90-A25KC-200 10909901125	C	G 1" cyl 04557000223	1½" ANSI 150 lbs 04542000123	1½" ANSI 300 lbs 19050600225	E114 (2) 20251003648	CE 89 20151903620		KIT EBV 2.5-80/90-A25GC 19044400225
EBV 5-80/90-A25KC-200 10910001125	C	G 1" cyl 04557000223	1½" ANSI 150 lbs 04542000123	1½" ANSI 300 lbs 19050700225	E114 (2) 20251003648	CE 89 20151903620		KIT EBV 5-80/90-A25GC 19044500225
EBV 10-40/90-A25LA-200 10910401125	A	G 2" cyl 04570300223	4" ANSI 150 lbs 04500300123	4" ANSI 300 lbs 04520800123	D215 (2) 20251403648	CE 159A 20109003620	10912700200	KIT EBV 10-40/90-A25LA 19043900225
EBV 20-40/90-A25LA-200 10910501125	A	G 2" cyl 04570300223	4" ANSI 150 lbs 04500300123	4" ANSI 300 lbs 04520800123	D215 (2) 20251403648	CE 159A 20109003620	10912700200	KIT EBV 20-40/90-A25LA 19044000225
EBV 32-40/90-A25LA-200 10910601125	A	G 2" cyl 04570300223	4" ANSI 150 lbs 04500300123	4" ANSI 300 lbs 04520800123	D215 (2) 20251403648	CE 159A 20109003620	10912700200	KIT EBV 32-40/90-A25LA 19044100225
EBV 50-40/90-A25LA-200 11077501125	A	G 2" cyl 04570300223	4" ANSI 150 lbs 04500300123	4" ANSI 300 lbs 19051100225	D215 (2) 20251403648	CE 159A 20109003620	10912700200	KIT EBV 50-40/90-A25LA 19054700225
EBV 100-40/90-A20PA-200 (4) 10918001120	A	G 2" cyl 04565600223	8" ANSI 150 lbs 04500800123	8" ANSI 300 lbs 04500900123	D368 (2) 20127403625	CE 300 20150800100		KIT EBV 100-40/90-A20PA 19044600220
EBV 200-40/90-A20PA-200 (4) 10918101120	A	G 2" cyl 04565600223	8" ANSI 150 lbs 04500800123	8" ANSI 300 lbs 04500900123	D368 (2) 20127403625	CE 300 20150800100		KIT EBV 200-40/90-A20PA 19044700220

* According PED 2014/68/EU Article 4.3

(2) For other fluids consult Parker

(3) For Fluid group 1 consideration : consult Parker

(4) Accumulators 100&200 Litres standar Nitrile Mix 20

Accumulators are delivered with the nitrogen pre-charge 3 bar.

The charging pressure for low pressure accumulators must never exceed **20 bar** at the maximum operating temperature.

Model of valve stem
5/8" 18 UNF
(A)



Model of valve stem
integrated
7/8"14 UNF
(C)



Model of valve stem
integrated
5/8" 18 UNF
(D)



Tel: +45 63 12 83 00 | Email: ps@hymatik.com | www.hymatik.com | Hvidkaervej 27a, DK-5250 Odense SV, Denmark

Type	Effective Gas vol. Litres	Max. Working pressure (PS) bar	Max. Flow Rate l/min	Admissible accumulator Temp. min/max °C (1)	Max. Weight kg	Gas Connection	Dimensions in mm							
							A max height	B	C	øD max	ød	Øe	F on flats	G connection BSP
EBV 0.5-50/00-A25KD-200*	0.5	50	450	-20/100	3	5/8" 18 UNF	245	52	28	90	16	68	-	G2"
EBV 1-80/00-A25KC-200*	1	80	450	- 20/100	5	7/8"14 UNF	310	47	66	116	22.5	68	-	G2"
EBV 2.5-80/90-A25KC-200	2.3	80	450	- 20/100	10	7/8"14 UNF	484	47	66	116	22.5	68	-	G2"
EBV 5-80/90-A25KC-200	5	80	450	- 20/100	17	7/8"14 UNF	867	47	66	116	22.5	68	-	G2"
EBV 10-40/90-A25LA-200	10	40	900	- 20/100	13	5/8" 18 UNF	454	51	75	212	22.5	120	112	G3½"
EBV 20-40/90-A25LA-200	18	40	900	- 20/100	22	5/8" 18 UNF	776	51	75	212	22.5	120	112	G3½"
EBV 32-40/90-A25LA-200	34	40	900	- 20/100	37	5/8" 18 UNF	1309	51	75	212	22.5	120	112	G3½"
EBV 50-40/90-A25LA-200	50	40	900	- 20/100	51	5/8" 18 UNF	1824	51	75	212	22.5	120	112	G3½"
EBV 100-40/90-A**20**PA-200	90	40	3000	- 6/110	124	5/8" 18 UNF	1318	158	93	371	80	224	-	M205x3
EBV 200-40/90-A**20**PA-200	202	40	3000	- 6/110	215	5/8" 18 UNF	2529	158	93	371	80	224	-	M205x3

(1)Temperature range can change depending on shell and elastomer material. Please see bladder materials and Type (page 87)

Above dimensions are in mm and are subject to manufacturing tolerances.



EBV Series 20 bar, 100 to 575 Litres

Standard version (**Carbon Steel** shell/NBR mix) compatible with mineral oils (2). According to PED 2014/68/EU, Fluid Group 2 (3)

Part numbers, Accessories, Dimensions

Type Part number	Adaptor Threaded Part number	Flange Model Part number	 Model Part number	Complete Repair Kit Model Part number
EBV 100-20/90-A25PA-200 10962101125	G 2" cyl 04565600223	8" ANSI 150 lbs 04500800123	8" ANSI 300 lbs 04500900123	KiT EBV 100-20/90-A20LA 19050400225
EBV 150-20/90-A25PA-200 10962201125	G 2" cyl 04565600223	8" ANSI 150 lbs 04500800123	8" ANSI 300 lbs 04500900123	KiT EBV 150-20/90-B20LA 19050500225
EBV 200-20/90-A25PA-200 10962301125	G 2" cyl 04565600223	8" ANSI 150 lbs 04500800123	8" ANSI 300 lbs 04500900123	KiT EBV 200-20/90-B20LA 19050600225
EBV 300-20/90-A25PA-200 10962401125	G 2" cyl 04565600223	8" ANSI 150 lbs 04500800123	8" ANSI 300 lbs 04500900123	KiT EBV 300-20/90-B30LA 19050700225
EBV 375-20/90-A25PA-200 10962501125	G 2" cyl 04565600223	8" ANSI 150 lbs 04500800123	8" ANSI 300 lbs 04500900123	KiT EBV 375-20/900-A25LA 19050800225
EBV 475-20/90-A25PA-200 10962601125	G 2" cyl 04565600223	8" ANSI 150 lbs 04500800123	8" ANSI 300 lbs 04500900123	KiT EBV 475-20/90-A25LA 19050900225
EBV 530-20/90-A25PA-200 10962701125	G 2" cyl 04565600223	8" ANSI 150 lbs 04500800123	8" ANSI 300 lbs 04500900123	KiT EBV 500-20/90-A25LA 19051000225
EBV 575-20/90-A25PA-200 10962801125	G 2" cyl 04565600223	8" ANSI 150 lbs 04500800123	8" ANSI 300 lbs 04500900123	KiT EBV 575-20/90-A25LA 19051100225

(2) For other fluids consult Parker

(3) For Fluid group 1 considération : consult Parker

Accumulators are delivered with the nitrogen pre-charge 3 bar.

The charging pressure for low pressure accumulators must never exceed **20 bar** at the maximum operating temperature.

Model of valve stem
5/8" 18 UNF
(A)



Tel: +45 63 12 83 00 | Email: ps@hymatik.com | www.hymatik.com | Hvidkaervej 27a, DK-5250 Odense SV, Denmark

Type	Effective Gas vol. Litres	Max. Working pressure (PS) bar	Max. Flow rate (l/mn)	Admissible accumulator Temp. min/ max °C (1)	Max Weight kg	Gas connection	Dimensions in mm							
							A max height	B	C	øD max	ød	øE	G connection	øH
EBV 100-20/90-A25PA-200	93	20	3000	- 20/80	145	5/8" 18 UNF	824	244	-	561	291.5	255	M205x3	224
EBV 150-20/90-A25PA-200	139	20	3000	- 20/80	170	5/8" 18 UNF	1027	345.5	-	561	373	295	M205x3	224
EBV 200-20/90-A25PA-200	207	20	3000	- 20/80	208	5/8" 18 UNF	1326	465	752	561	600	295	M205x3	224
EBV 300-20/90-A25PA-200	293	20	3000	- 20/80	253	5/8" 18 UNF	1702	522	1128	561	668	295	M205x3	224
EBV 375-20/90-A25PA-200	379	20	3000	- 20/80	300	5/8" 18 UNF	2083	522	1509	561	1049	295	M205x3	224
EBV 475-20/90-A25PA-200	473	20	3000	- 20/80	350	5/8" 18 UNF	2497	522	1923	561	1463	295	M205x3	224
EBV 530-20/90-A25PA-200	532	20	3000	- 20/80	380	5/8" 18 UNF	2756	522	2182	561	1722	295	M205x3	224
EBV 575-20/90-A25PA-200	565	20	3000	- 20/80	400	5/8" 18 UNF	2905	522	2231	561	1871	295	M205x3	224

(1)Temperature range can change depending on shell and elastomer material. Please see bladder materials and Type (page 87)

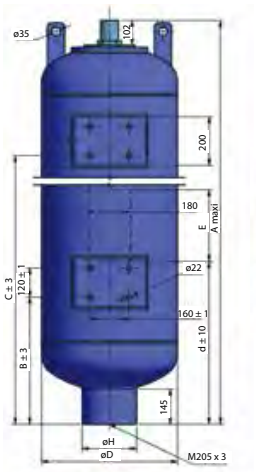

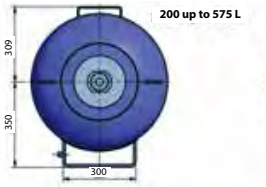

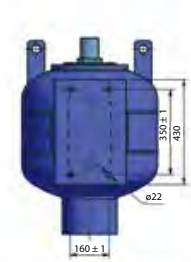

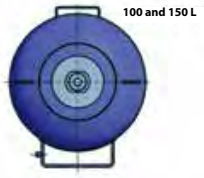

IBV Series 35 bar, 100 to 575 Litres

Standard version (**Carbon Steel** shell/NBR mix) compatible with mineral oils (2).

According to ASME VIII Division I U STAMPED

Part numbers, Accessories, Dimensions

Type Part Number	Flange	Complete Repair Kit
		Part number
IBV 100.35/90 J41000355419R25	Welded flange 4"#150RF other available upon request.	8590009-xxyy
IBV 150.35/90 J41500355419R25		8590010-xxyy
IBV 200.41/90 U22000415A25920		8590011-xxyy
IBV 300.35/90 J43000355419R25		8590013-xxyy
IBV 375.35/90 J43750355419R25		8590014-xxyy
IBV 475.35/90 J44750355419R25		8590015-xxyy
IBV 575.35/90 J45750355419R25		8590017-xxyy

Available in PED 2014/68/EU version Fluid Group 1 or 2

Available in stainless steel, Duplex and Superduplex

(2) For other fluids consult Parker

Tel: +45 63 12 83 00 | Email: ps@hymatik.com | www.hymatik.com | Hvidkaervej 27a, DK-5250 Odense SV, Denmark

Type	Effective Gas vol. Litres	Max.Working pressure (PS) bar	Admissible accumulator Temp. min/max °C	Max Weight kg	Dimensions in mm				
					A max height	B	C	øD max	G connection
IBV 100.35/90	103	35	- 20°C +100°C	188	556	260	175	560	4"
IBV 150.35/90	154	35	- 20°C +100°C	220	759	260	175	560	4"
IBV 200.41/90	205	41	- 20°C +100°C	271	1058	260	175	560	4"
IBV 300.35/90	303	35	- 20°C +100°C	339	1448	260	175	560	4"
IBV 375.35/90	377	35	- 20°C +100°C	397	1815	260	175	560	4"
IBV 475.35/90	478	35	- 20°C +100°C	463	2230	260	175	560	4"
IBV 575.35/90	579	35	- 20°C +100°C	525	2638	260	175	560	4"

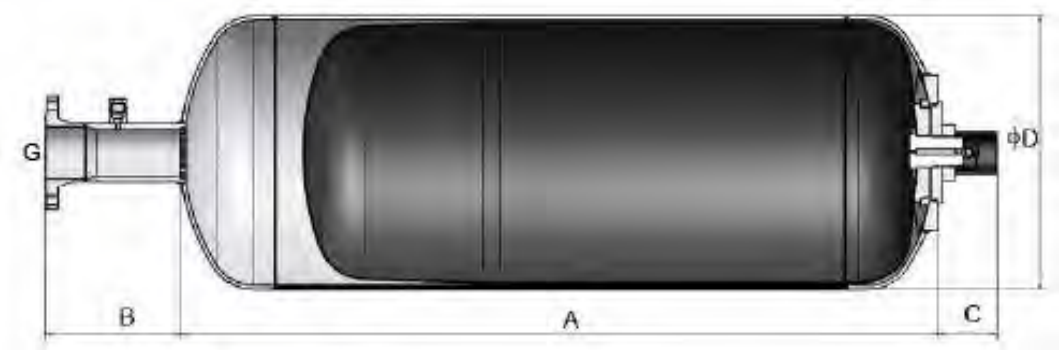

IBV Series 14 bar, 10 to 50 Litres

Standard version (**Stainless Steel** shell/compatible with mineral oils) (2).

According to ASME VIII Division I U STAMPED

Part numbers, Accessories, Dimensions

Type Part number	Adaptor	Flange	Clamps	Support Bracket	Complete Repair Kit
			Model (quantity) **Unit** Part number	Model Part number	Part number
IBV 10.14 J4010014500XR25	Various adaptors and flanges available Consult Division		D215 (2) 20251403648	CE 159A 20109003620	8590001-xxyy
IBV 12.14 J4012014500XR25			D215 (2) 20251403648	CE 159A 20109003620	8590002-xxyy
IBV 20.14 J4020014500XR25			D215 (2) 20251403648	CE 159A 20109003620	
IBV 24,5.14 J4245014500XR25			20251403648	20109003620	8590004-xxyy
IBV 32.14 J4032014500XR25			D215 (2) 20251403648	CE 159A 20109003620	8590005-xxyy
IBV 50.14 J4050014500XR25			D215 (2) 20251403648	CE 159A 20109003620	8590006-xxyy

Available in PED 2014/68/EU version Fluid Group 1 or 2

Available in carbon steel, Duplex and Superduplex

(2) For other fluids consult Parker

Type	Effective Gas vol. Litres	Max.Working pressure (PS) bar	Admissible accumulator Temp. min/max °C	Max Weight kg	Dimensions in mm					
					A max height	B	C	øD max	G connection	Or fluid size
IBV 10.14	9	14	- 20/100	16	324	215	57	66	3"1/2	96x3
IBV 12.14	11	14	- 20/100	20	435	215	57	66	3"1/2	96x3
IBV 20.14	18	14	- 20/100	27	645	215	57	66	3"1/2	96x3
IBV 24,5.14	22.5	14	- 20/100	32	815	215	57	66	3"1/2	96x3
IBV 32.14	32	14	- 20/100	44	1180	215	57	66	3"1/2	96x3
IBV 50.14	48.5	14	- 20/100	62	1695	215	57	66	3"1/2	96x3

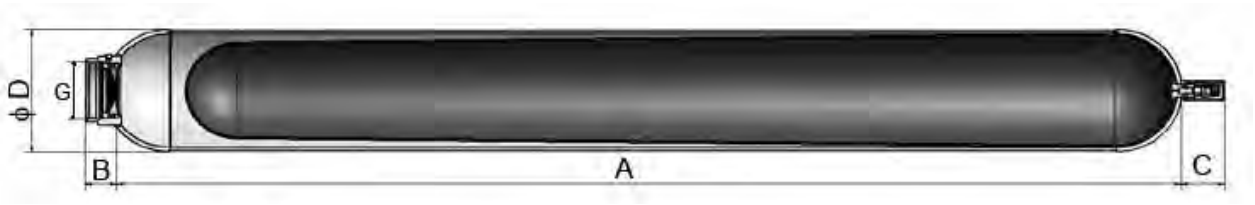

IBV Series 14 bar, 100 and 200 Litres

Standard version (**Stainless Steel** shell/compatible with mineral oils) (2).

According to ASME VIII Division I U STAMPED

Part numbers, Accessories, Dimensions

Type Part number	**Adaptor**	**Flange**	**Clamps**	**Support Bracket**	**Complete Repair Kit**
			Model (quantity) Part number	Model Part number	Part number
IBV 100.14 J41000146419H20	Various adaptors and flanges available		D368 (2) 20127403625	CE 300 20150800100	8590007-xxyy
IBV 200.14 J62000145419R25			D368 (2) 20127403625	CE 300 20150800100	8590008-xxyy

Available in PED 2014/68/EU version Fluid Group 1 or 2

Available in carbon steel, Duplex and Superduplex

(2) For other fluids consult Parker

Type	Effective Gas vol. Litres	Max. Working pressure (PS) bar	Admissible accumulator Temp. min/max °C	Max Weight kg	Dimensions in mm				
					A max height	B	øD max	G connection	Or fluid size
IBV 100.14	97	14	-6/100	85	1215	95	368	M205x3	196 x 3
IBV 200.14	196.5	14	-6/100	154	2427	95	368	M205x3	196 x 3

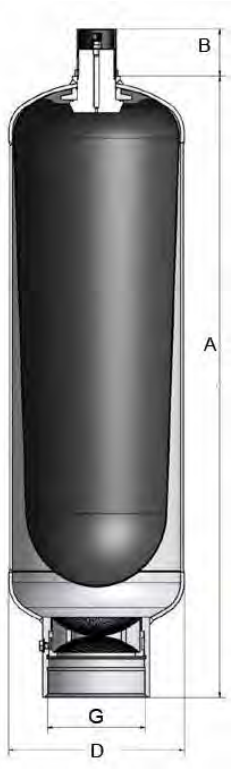

IBV Series 14 bar, 100 to 575 Litres

Standard version (**Stainless Steel** shell/compatible with mineral oils (2)).

According to ASME VIII Division I U STAMPED

Part numbers, Accessories, Dimensions

Type Part number	**Flange**	**Complete Repair Kit** Part number
IBV 100.14 J41000145419R25	Welded flange 4"#150RF other available upon request. Consult Division	8590009-xxyy
IBV 150.14 J41500145419R25		8590010-xxyy
IBV 200.14 J42000145419R25		8590011-xxyy
IBV 300.14 J43000145419R25		8590013-xxyy
IBV 375.14 J43750145419R25		8590014-xxyy
IBV 475.14 J44750145419R25		8590015-xxyy
IBV 575.14 J45750145419R25		8590017-xxyy

Accumulators shall be provided with Welded brackets or legs.

Available in PED 2014/68/EU version Fluid Group 1 or 2

(2) For other fluids consult Parker

Tel: +45 63 12 83 00 | Email: ps@hymatik.com | www.hymatik.com | Hvidkaervej 27a, DK-5250 Odense SV, Denmark

Type	Effective Gas vol. Litres	Max. Working pressure (PS) bar	Admissible accumulator Temp. min/max °C	Max Weight kg	Dimensions in mm				
					A max height	B	C	øD max	G connection
IBV 100.14	103	14	-20/100	129	556	260	175	560	4"
IBV 150.14	154	14	-20/100	153	759	260	175	560	4"
IBV 200.14	205	14	-20/100	187	1058	260	175	560	4"
IBV 300.14	303	14	-20/100	234	1448	260	175	560	4"
IBV 375.14	377	14	-20/100	274	1815	260	175	560	4"
IBV 475.14	478	14	-20/100	320	2230	260	175	560	4"
IBV 575.14	579	14	-20/100	365	2638	260	175	560	4"

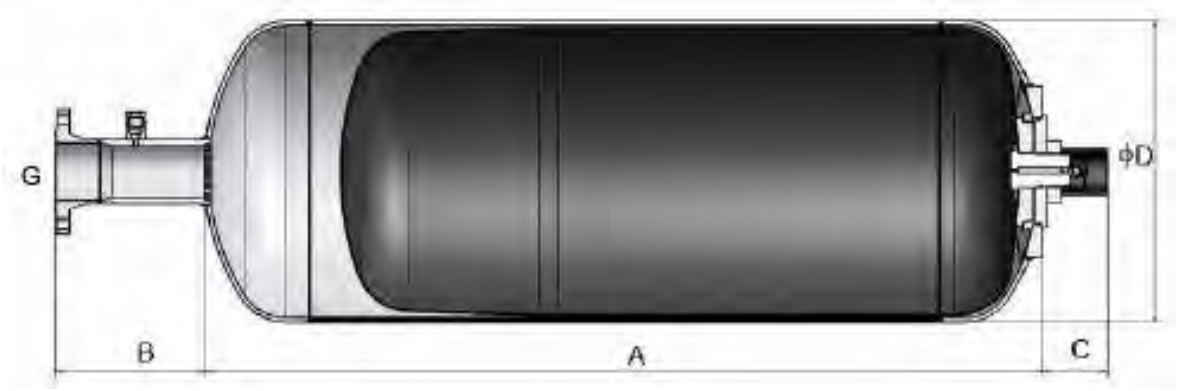

EBV Series 20 & 40 bar, 0.5 to 200 Litres

Standard version (**Stainless Steel** shell/NBR mix) compatible with mineral oils (2). According to PED 2014/68/EU, Fluid Group 2 (3)

Part numbers, Accessories, Dimensions

Type Part number	Valve	Adaptor	Flange		Clamps	Support Bracket	Lifting Eye on gas side	Complete Repair Kit
	see drawing	Threaded Part number	Model Part number	Model Part number	Model Part number	Model Part number	Model Part number	Model Part number
EBV0,5-40/00-I25KD-200* 10929001925	D	G 1" cyl 04557001423	-	-	 10957	-	-	KIT EBV 0.5-40/00-I25GD 19010401725
EBV 1-40/00-I25KC-200* 10929101925	C	G 1" cyl 04557001423	1½" ANSI 150 lbs 04542001423	1½" ANSI 300 lbs 04524101423	 10981	CE 89 20151901220		KIT EBV 1-40/00-I20GC 19044301720
EBV 2,5-40/90-I25KC-200 10929201925	C	G 1" cyl 04557001423	1½" ANSI 150 lbs 04542001423	1½" ANSI 300 lbs 04524101423	 10981	CE 89 20151901220	-	KIT EBV 2.5-40/90-I20GC 19044401720
EBV 5-40/90-I25KC-200 10929301925	C	G 1" cyl 04557001423	1½" ANSI 150 lbs 04542001423	1½" ANSI 300 lbs 04524101423	 10981	CE 89 20151901220		KIT EBV 5-40/90-I25GC 19044501725
EBV 10-40/90-I25LA-200 10910401925	A	G 2" cyl 04570301423	4" ANSI 150 lbs 04500301423	4" ANSI 300 lbs 04520801423		CE 159A 20109001220	 10912701200	KIT EBV 10-40/90-I25LA 19043901725
EBV 20-40/90-I25LA-200 10910501925	A	G 2" cyl 04570301423	4" ANSI 150 lbs 04500301423	4" ANSI 300 lbs 04520801423		CE 159A 20109001220	 10912701200	KIT EBV 20-40/90-I25LA 19044001725
EBV 32-40/90-I25LA-200 10910601925	A	G 2" cyl 04570301423	4" ANSI 150 lbs 04500301423	4" ANSI 300 lbs 04520801423		CE 159A 20109001220	 10912701200	KIT EBV 32-40/90-I25LA 19044101725
EBV 50-40/90-I25LA-200 11077501925	A	G 2" cyl 04570301423	4" ANSI 150 lbs 04500301423	4" ANSI 300 lbs 04520801423		CE 159A 20109001220	 10912701200	KIT EBV 50-40/90-I25LA 19054701725
EBV 100-20/90-I**20**PA-200 (1) 10951901920	A		8" ANSI 150 lbs 04500801423	8" ANSI 300 lbs 04500901423		CE 300	-	KIT EBV 100-40/90-I20PA 19044601220
EBV 200-20/90-I**20**PA-200 (1) 10952001920	A		8" ANSI 150 lbs 04500801423	8" ANSI 300 lbs 04500901423		CE 300	-	KIT EBV 200-40/90-I20PA 19044701220

* According to PED 2014/68/EU Article 4.3
(2) For other fluids consult Parker
(3) For Fluid group 1 consideration : consult Parker
(4) Accumulators 100&200 Litres standar Nitrile Mix 20

Model of valve stem
5/8" 18 UNF
(A)



Model of valve stem
integrated
7/8"14 UNF
(C)



Model of valve stem
integrated
5/8" 18 UNF
(D)



Type	Effective Gas volume Litres	Max. Working pressure (PS) bar	Max. Flow rate (l/mn)	Admissible Accumulator Temp. min/max °C (1)	Max Weight kg	Gas connection	Dimensions in mm							
							A max height	B	C	øD max	ød	ØE	F on flats	G connection
EBV0,5-40/00-I25KD-200*	0.5	40	450	- 20/100	1.2	5/8" 18 UNF	246	52	30	91	16	70	-	G2"
EBV 1-40/00-I25KC-200*	1	40	450	- 20/100	1.7	7/8" 14 UNF	312	52	75	110	22.5	70	-	G2"
EBV 2,5-40/90-I25KC-200	2.5	40	450	- 20/100	3.5	7/8" 14 UNF	486	51	75	110	22.5	70	-	G2"
EBV 5-40/90-I25GC-200	5	40	450	- 20/100	6.5	7/8" 14 UNF	869	51	75	110	22.5	70	-	G2"
EBV 10-40/90-I25LA-200	10	40	900	- 20/100	13	5/8" 18 UNF	454	51	75	212	22.5	120	112	G3½"
EBV 20-40/90-I25LA-200	18	40	900	- 20/100	22	5/8" 18 UNF	776	51	75	212	22.5	120	112	G3½"
EBV 32-40/90-I25LA-200	34	40	900	- 20/100	37	5/8" 18 UNF	1309	51	75	212	22.5	120	112	G3½"
EBV 50-40/90-I25LA-200	50	40	900	- 20/100	51	5/8" 18 UNF	1829	51	75	212	22.5	120	112	G3½"
EBV 100-20/90-I20PA-200	90	20	3000	- 6/80	92	5/8" 18 UNF	1317	158	93	371	80	224	-	M205 x 3
EBV 200-20/90-I20PA-200	202	20	3000	- 6/80	171	5/8" 18 UNF	2528	158	93	371	80	224	-	M205 x 3

(1)Temperature range can change depending on shell and elastomer material. Please see bladder materials and Type (page 87)
Above dimensions are in mm and are subject to manufacturing tolerances.

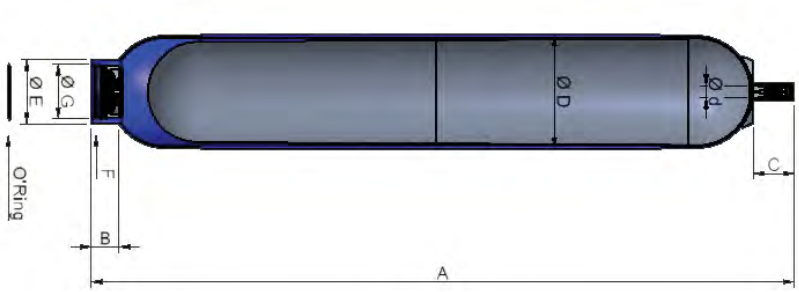

Adaptors EBV Carbon Steel

Part numbers, Dimensions

Accumulator model	Connection of accumulator ø F	Connection ø I	Part Number
EBV 0,5 to 5 Litres 50 & 80 Bar	G 2”	G1"	04557000223
		Blind	04502400223
EBV 10 to 50 Litres 40 Bar	G 3 1/2”	G2"	04570300223
		Blind	04500500223
EBV 100 to 200 Litres 40 Bar	M205 x 3	G2"	04565600223
		Blind	04500600123

Adaptors EBV Stainless Steel

Accumulator model	Connection of accumulator ø F	Connection ø I	Part Number
EBV 0,5 to 5 Litres 40 Bar	G 2”	G1"	04557001423
		Blind	04502401423
EBV 10 to 50 Litres 40 Bar	G 3 1/2”	G2"	04570301423
		Blind	04500501423
EBV 100 to 200 Litres 20 Bar	M205 x 3	G2"	Consult Division
		Blind	Consult Division

(1) 2 holes dia 8,5 x 10

Flanges EBV Carbon Steel

Accumulator model	Connection of accumulator ø G	Flange Model	Part Number	K
EBV 1 to 5 Litres 40 Bar	G 2”	1 1/2" ANSI 150 lbs	04542000123	21.5
		1 1/2" ANSI 300 lbs	04524100123	25
EBV 10 to 50 Litres 40 Bar	G 3 1/2”	4" ANSI 150 lbs	04500300123	28
		4" ANSI 300 lbs	04520800123	36.5
EBV 100 to 575 Litres 40 Bar	M205 x 3	8" ANSI 150 lbs	04500800123	142
		8" ANSI 300 lbs	04500900123	151

Flanges EBV Stainless Steel

Accumulator model	Connection of accumulator ø G	Flange Model	Part Number	K
EBV 1 to 5 Litres 40 Bar	G 2”	1 1/2" ANSI 150 lbs	04542001423	21.5
		1 1/2" ANSI 300 lbs	04524101423	25
EBV 10 to 50 Litres 40 Bar	G 3 1/2”	4" ANSI 150 lbs	04500301423	28
		4" ANSI 300 lbs	04520801423	36.5
EBV 100 to 575 Litres 40 Bar	M205 x 3	8" ANSI 150 lbs	04500801223	142
		8" ANSI 300 lbs	04500901223	151

Shape	J/Flats	K	O-ring
A	65	13	A. O-Ring 54 x 3
A	65	13	O-Ring 54 x 3
A	112	20	O-Ring 96 x 4
A	112	20	O-Ring 96 x 4
A	2x Ø8,5x10	20	O-Ring 196,21 x 5,33
A	2x Ø8,5x10	20	O-Ring 196,21 x 5,33

Shape	J/Flats	K	O-ring
A	-	13	A. O-Ring 54 x 3
A	65	13	O-Ring 54 x 3
A	112	20	O-Ring 96 x 4
A	112	20	O-Ring 96 x 4
A	-	20	O-Ring 196,21 x 5,33
A	-	20	O-Ring 196,21 x 5,33

Adaptors EBV

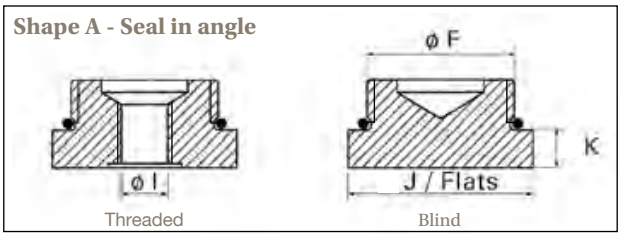

Flanges EBV

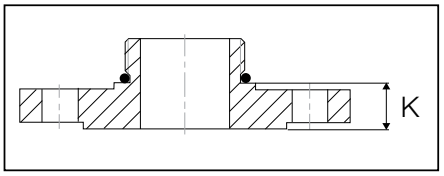

These accessories are designed to perfectly fit Parker ACDE accumulators. They meet the latest regulations and are compliant with the CETOP standard.

Tel: +45 63 12 83 00 | Email: ps@hymatik.com | www.hymatik.com | Hvidkaervej 27a, DK-5250 Odense SV, Denmark

Notes

Tel: +45 63 12 83 00 | Email: ps@hymatik.com | www.hymatik.com | Hvidkaervej 27a, DK-5250 Odense SV, Denmark

hymatik





aerospace
climate control
electromechanical
filtration
fluid & gas handling
hydraulics
pneumatics
process control
sealing & shielding





EHV Series
Bladder Accumulators

High Pressure, 250 to 690 bar



Parker OLAER

ENGINEERING YOUR SUCCESS.

Tel: +45 63 12 83 00 | Email: ps@hymatik.com | www.hymatik.com | Hvidkaervej 27a, DK-5250 Odense SV, Denmark

Description

Designed for high pressure hydraulic systems the EHV bladder accumulator is available in carbon & stainless steel, (70 to 690 bar, 0.2 to 57 Litres). Options with a flanged SAE fluid port and for high flow rates are also available.

The EHV bladder accumulator offers a reliable and efficient solution for storing energy under pressure. Utilizing comprehensive tools and resources including an applications database, CAD/CAM, finite element analysis, reliability studies and simulation we have optimized the design and performance of the accumulator. Parker Olaer bladder accumulators are suitable for use in more than 35 countries (all hydraulic accumulators for Europe are CE marked) and they can meet an extensive range of international and industry approvals.

The EHV Series bladder accumulator comes with an O-ring seal fluid port and 7/8" UNF gas connection as standard however other options are available.

Rigorous product testing and continuous product development help to ensure our hydraulic accumulators operate at optimum efficiency and can perform in the most demanding environments. Parker accumulator accessories such as Safety Blocks, Burst Discs and Permanent Charging Sets, can aid the safe installation and operation of the accumulators in any hydraulic system.

Parker Olaer have developed very sophisticated simulation software to optimize sizing recommendations for hydraulic accumulators. You can download the accumulator sizing software from www.Parker.com/acde.

Features/Benefits

- **Extensive range of international and industry approvals (PED 2014/68/EU, EN 14359, ATEX, ASME VIII div 1, SELO, CRN, AS1210, NR13, CUTR, DNV, BV Marine, ABS and GL)**
- **Rigorous product testing and continuous product development**
- **Large selection of materials and fittings to suit every hydraulic system.**
- **Parker Olaer offers a wealth of product knowledge and experience thus enabling us to provide first class technical support and customer service.**

Markets

- **Industrial**
- **Defense**
- **Renewable Energy**
- **Marine**
- **Mining**
- **Mobile**
- **Oil and Gas**
- **Processing**
- **Rail**

Applications

- **Hydraulic Power Units**
- **Ship Cranes**
- **Wind Turbines**
- **Plastic Presses**
- **Tooling Machines**
- **Construction/Mobile Vehicles**
- **Machine Tools**

Technical Specifications

The accumulator comprises a forged or welded steel shell, a rubber bladder and anti-extrusion system.

Volume: 0.2 to 200 Litres

Pressure: 70 to 690 bar

Shell Material: Options include; alloyed steel, stainless steel, aluminium, titanium and composites.

Bladder Materials: Various bladder materials available which are compatible with a wide range of fluids and temperatures.

Anti-extrusion System: Fluid port

Approvals: PED 2014/68/EU, ATEX, ASME VIII div 1, SELO, CUTR, DNV, BUREAU VERITAS MARINE, ABS, Germanischer Lloyd's.

Specials: - For special constructions please consult Parker.

Maximum pressure differential (P2/P0): 4:1

Nitrogen gas pressure : The maximum pressure (PS) with nitrogen purity > 99.8% N2 class 2.8, is indicated on the accumulator.

Check that the maximum allowable pressure is greater than that of the hydraulic

Accumulator working temperature determination example :

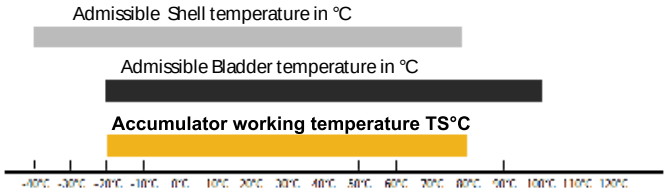



Spare Parts

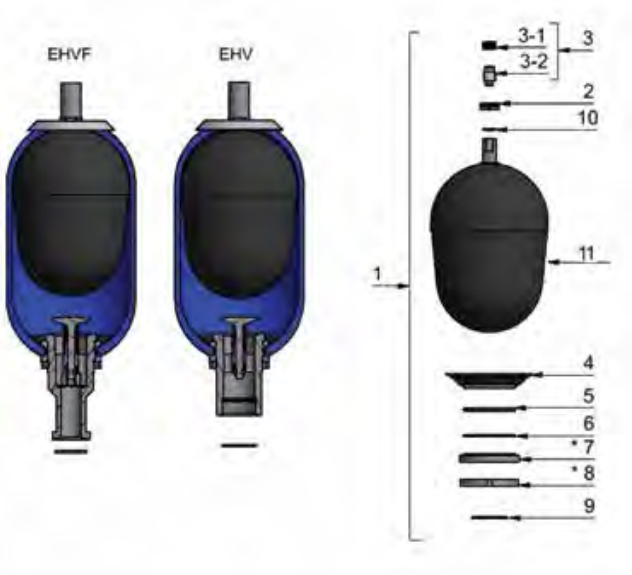

Item	Spare parts
1	Spare Parts Kit
2	Valve nut
3	Gas valve Assembly
3.1	Gas valve
3.2	Gas valve plug
4	Anti-extrusion ring
5	Fluid port seal
6	Back up seal ring
7*	Spacer
8*	Locking nut
9	O-ring fluid port
10	Back up ring (depending on the model)
11	Bladder

* These parts are not delivered in the spare parts kit (complete repair kit)

EHV Series: How to order a high pressure accumulator

EHV 24,5**- 330 /**90**-A**25**G**A**-2**00**/100**

Product Type

EHV	High pressure bladder
ETHV	High pressure transfer bladder
EHVF	High pressure bladder flange

Volume in L (up to 4 Characters)

0,2	for 0,2 Liter
20	for 20 Liters
24,5	for 24.5 Liters

Maximum Working Pressure

120	for 120 bar max working pressure (stainless steel range)
330	for 330 bar max working pressure
350	for 350 bar max working pressure
690	for 690 bar max working pressure

*If the product is not CE, use highest MWP according to regulation relevant to the product (see Approvals PAGES 84&85)

Approvals* According to:-

00	PED2014/68/EU, article 4.3
11	PED2014/68/EU + BV Marine
13	PED2014/68/EU, article 4.3 + BV Marine
23	PED2014/68/EU, article 4.3 + ABS
24	PED2014/68/EU + DNVGL
41	PED2014/68/EU + ABS
43	PED2014/68/EU, article 4.3 + ABS
48	ASME VIII div 1 app 22
71	CUTR 032/2013
83	PED2014/68/EU + AS1210
85	PED2014/68/EU, article 4.3 + SELO
86	PED2014/68/EU + ASME VIII div 1 app 22 + SELO
88	PED2014/68/EU + SELO
90	PED2014/68/EU
91	ASME VIII div 1 app 22 + AS1210
92	ASME VIII div 1 app 22 + CRN
94	PED2014/68/EU + ASME VIII div 1 app 22
AA	PED2014/68/EU + NR13
AE	ASME VIII div 1 + NR13
AU	ASME VIII div 1 + CUTR 032/2013

Material (Shell and Fluid Port)

A	All parts in carbon steel with Epoxy paint for shell only [-40°C;+80°C]
B	Carbon Steel shell + Internal Protection Epoxy 80 µm + stainless steel fluid port and valve
C	Carbon Steel shell + Int- Ext Protection Kanigen 50 µm + stainless steel fluid port and valve
D	Carbon Steel shell + Int- Ext Protection Blue Rilsan 200-300 µm + carbon steel fluid port and valve
E	Carbon Steel shell + stainless steel fluid port and valve
F	Carbon steel shell + Internal Protection Teflon 40-50 µm
I	All parts in stainless steel [-40°C;+80°C]
R	Carbon Steel shell + Int- Ext Protection Blue Rilsan 200-300 µ + stainless steel fluid port and valve
Z	Special

Bladder Mix

02	Mix 02 [-32°C;+115°C] Hydrin C
10	Mix 10 [-30°C;+80°C] Nitrile Low Temperature
20	Mix 20 [-6°C;+100°C] Nitrile Heavy Duty
25	Mix 25 [-20°C;+100°C] Nitrile standard
30	Mix 30 [-5°C;+115°C] Nitrile Low Permeability
35	Mix 35 [0°C;+130°C] Nitrile high temperature
37	For Mix 37 [-59°C;+110°C] Nitrile Extreme Low Temp
40	For Mix 40 [-15°C;+120°C] Butyl
47	For Mix 47 [-40°C;+120°C] EPDM
80	For Mix 80 [-20°C;+140°C] Viton
E2	For Mix E2 [-15°C;+100°C] Nitrile
XL	For Mix XL [-10°C;+100°C] Nitrile very low permeation

Fluid Port Configuration

A	Gas cyl. 1/2" (max flow rate: 120L/min
B	Gas cyl. 3/4" (max flow rate: 240L/min
C	Gas cyl. 1" (max flow rate: 360L/min
D	Gas cyl. 1"1/4" (max flow rate: 450L/min
E	Gas cyl. 1"1/4" DA (max flow rate: 570L/min
G	Gas cyl. 2" (max flow rate: 900L/min)
H	Gas cyl.2" DA (max flow rate: 1200L/min)
J	Gas cyl.2"1/2 GD (max flow rate 1800 L/min)
M	Metric M40 x1.5
N	Metric M50 x1.5
R	Flange BR 400-38 (max flow rate: 900L/min, EHV 10L to 57L)
S	Flange BR 400-25 (max flow rate: 450L/min, EHV 2,5L to 10L)
Z	Special

Gas Valve Configuration

0	No gas valve
A	Gas Valve Type - 5/8"- 18 UNF
B	Gas Valve Type - 7/8"- 14 UNF
C	Gas Valve Type- 7/8" -14 UNF integrated
D	Gas Valve Type - 5/8"- 18 UNF integrated
E	Gas Valve Type- 7/8" -14 UNF high pressure
F	Gas Valve Type - 5/8"- 18 UNF + Burst disc
G	Gas Valve Type - 7/8"- 14 UNF + Burst disc
H	Gas Valve Type- 7/8" -14 UNF integrated + Burst disc
I	Gas Valve Type - 5/8"- 18 UNF integrated + Burst disc
J	Gas Valve Type- 7/8" -14 UNF high pressure + Burst disc
Z	Special

Fluid Type

0	Not applicable
1	Fluid Type 1 CE Fluid Group 1
2	Fluid Type 2 - CE Fluid Group 2

Special

00	No Special features or configuration
EX	ATEX
EZ	ATEX with other special configuration
EU	All components sourced in EU
SP	Special painting
D1	Standard documentation + Leak test report
D2	Standard documentation + Descriptive state-ment + Design calculation note
ZZ	Special configuration or several options

ASME certified accumulator according to ASME VIII Div.1 :

30	*MWP = 3000 psi (207 bar)*
36	*MWP = 3600 psi (248 bar)*
40	*MWP = 4000 psi (276 bar)*
50	*MWP = 5000 psi (345 bar)*

Precharge @ 20°C in Bar

When at storage pressure (Keep empty)*

*Parker precharge accumulator with 2 Bar for storage

100 When at storage (keep empty) example for 100 Bar precharge

EHV Series 330 bar, 10 to 57 Litres

Standard version (Carbon Steel shell/NBR mix) compatible with mineral oils (2).
According to PED 2014/68/EU, EN 14359, Fluid Group 2 (3).

Product Prices, Part numbers, Accessories

Type Part number	**Valve**	**Adaptor***	**Clamps**	**Support Bracket**	**Mounting Frame**	**Lifting Eye on gas side**	**Complete Repair Kit**
	see drawing	Threaded Part number	Model (quantity) Part number	Model Part number	Model Part number	Model Part number	Model Part number
EHV 10-330/90-A25GA-200 10837001125	A	G 1" cyl	D226 (2)	CE159A	EF2		KIT EHV 10-330/90-A25GA 19028900225
EHV 10-330/90-A25GB-200 10865401125	B	04557000223	20251503648	20109003620	20217600125	10912700200	KIT EHV 10-330/90-A25GB 19035800225
EHV 12-330/90-A25GA-200 10867101125	A	G 1" cyl	D226 (2)	CE159A	EF2		KIT EHV 12-330/90-A25GA 19032100225
EHV 12-330/90-A25GB-200 10867401125	B	04557000223	20251503648	20109003620	20217600125	10912700200	KIT EHV 12-330/90-A25GB 19035900225
EHV 20-330/90-A25GA-200 10837101125	A	G 1" cyl	D226 (2)	CE159A	EF2		KIT EHV 20-330/90-A25GA 19029000225
EHV 20-330/90-A25GB-200 10865501125	B	04557000223	20251503648	20109003620	20217600125	10912700200	KIT EHV 20-330/90-A25GB 19036000225
EHV 24,5-330/90-A25GA-200 10837201125	A	G 1" cyl	D226 (2)	CE159A	EF2		KIT EHV 24.5-330/90-A25GA 19029400225
EHV 24,5-330/90-A25GB-200 10865601125	B	04557000223	20251503648	20109003620	20217600125	10912700200	KIT EHV 24.5-330/90-A25GB 19036300225
EHV 32-330/90-A25GA-200 10837301125	A	G 1" cyl	D226 (2)	CE159A	EF3		KIT EHV 32-330/90-A25GA 19029100225
EHV 32-330/90-A25GB-200 10865701125	B	04557000223	20251503648	20109003620	20217700125	10912700200	KIT EHV 32-330/90-A25GB 19036100225
EHV 42-330/90-A25GA-200 11112301125	A	G 1" cyl	D226 (2)	CE159A	EF3		KIT EHV 42-330/90-A25GA 19060800225
EHV 42-330/90-A25GB-200 11123601125	B	04557000223	20251503648	20109003620	20217700125	10912700200	KIT EHV 42-330/90-A25GB 19061100225
EHV 50-330/90-A25GA-200 11076701125	A	G 1" cyl	D226 (2)	CE159A	EF3		KIT EHV 50-330/90-A25GA 19054100225
EHV 50-330/90-A25GB-200 11076801125	B	04557000223	20251503648	20109003620	20217700125	10912700200	KIT EHV 50-330/90-A25GB 19054200225
EHV 57-330/90-A25GA-200 11112401125	A	G 1" cyl	D226 (2)	CE159A	EF3		KIT EHV 57-330/90-A25GA 19060900225
EHV 57-330/90-A25GB-200 11123801125	B	04557000223	20251503648	20109003620	20217700125	10912700200	KIT EHV 57-330/90-A25GB 19061200225

(2) For other fluids consult Parker

(3) For Fluid group 1 consideration : consult Parker

*For more adaptor options see pages 74 & 75

Model of valve stem
5/8" 18 UNF
(A)



Model of valve stem
7/8" 14 UNF
(B)



Tel: +45 63 12 83 00 | Email: ps@hymatik.com | www.hymatik.com | Hvidkaervej 27a, DK-5250 Odense SV, Denmark

Type	Effective Gas vol. Litres	Max. Working pressure (PS) bar	Max Flow Rate l/min	Admissible Accumulator Temperature min/max (°C) (1)	Weight kg	Gas connection	Dimensions in mm							
							A max Height	B	C	øD	ød	øE	F on flats	G connection
EHV 10-330/90-A25GA	9.2	330	900	-20/+80	31	5/8" 18 UNF	587	103	66	226	22.5	101	70	G2"
EHV 10-330/90-A25GB						7/8" 14 UNF								
EHV 12-330/90-A25GA	11	330	900	-20/+80	36	5/8" 18 UNF	687	103	66	226	22.5	101	70	G2"
EHV 12-330/90-A25GB						7/8" 14 UNF								
EHV 20-330/90-A25GA	17.8	330	900	-20/+80	49	5/8" 18 UNF	897	103	66	226	22.5	101	70	G2"
EHV 20-330/90-A25GB						7/8" 14 UNF								
EHV 24.5-330/90-A25GA	22.5	330	900	-20/+80	56	5/8" 18 UNF	1032	103	66	226	22.5	101	70	G2"
EHV 24.5-330/90-A25GB						7/8" 14 UNF								
EHV 32-330/90-A25GA	32	330	900	-20/+80	81	5/8" 18 UNF	1420	103	66	226	22.5	101	70	G2"
EHV 32-330/90-A25GB						7/8" 14 UNF								
EHV 42-330/90-A25GA	42	330	900	-20/+80	87	5/8" 18 UNF	1562	103	66	226	22.5	101	70	G2"
EHV 42-330/90-A25GB						7/8" 14 UNF								
EHV 50-330/90-A25GA	48.5	330	900	-20/+80	110	5/8" 18 UNF	1936	103	66	226	22.5	101	70	G2"
EHV 50-330/90-A25GB						7/8" 14 UNF								
EHV 57-330/90-A25GA	51	330	900	-20/+80	116	5/8" 18 UNF	2032	103	66	226	22.5	101	70	G2"
EHV 57-330/90-A25GB						7/8" 14 UNF								

(1)Temperature range can change depending on shell and elastomer material. Please see bladder materials and Type (page 87)

Above dimensions are in mm and are subject to manufacturing tolerances.

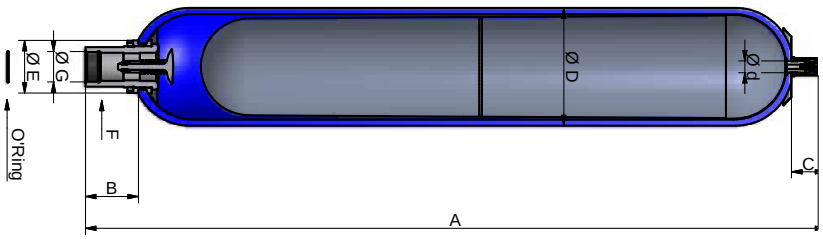

EHV Series 330 bar, 10 to 50 Litres, Marine

Standard version (Carbon Steel shell/NBR mix) compatible with mineral oils (2).
According to PED 2014/68/EU, EN 14359, Fluid Group 2 (3).

Product, Part numbers, Accessories

/43 /24	/13 /11	/23 /41	Valve model see drawing	Adaptor*	Clamps	Support Bracket	Mounting Frame	Lifting Eye on gas side	Complete Repair Kit
/24 : PED & DNV GL	/11 : PED & BV MARINE	/41 : PED & ABS		Threaded Part number	Model (quantity) Part number	Model Part number	Model Part number	Model Part number	Model Part number
EHV 10-330/24-A25GB-200 11168801125	EHV 10-330/11-A25GB-200 10999501125	EHV 10-330/41-A25GB-200 11165501125	B	G 1" cyl 04557000223	D226 (2) 20251503648	CE159A 20109003620	EF2 20217600125	10912700200	KIT EHV 10-330/XX-A25GB 19035800225
EHV 12-330/24-A25GB-200 11168901125	EHV 12-330/11-A25GB-200 10999601125	EHV 12-330/41-A25GB-200 11166501125	B	G 1" cyl 04557000223	D226 (2) 20251503648	CE159A 20109003620	EF2 20217600125	10912700200	KIT EHV 12-330/XX-A25GB 19035900225
EHV 20-330/24-A25GB-200 11169001125	EHV 20-330/11-A25GB-200 10999701125	EHV 20-330/41-A25GB-200 11166601125	B	G 1" cyl 04557000223	D226 (2) 20251503648	CE159A 20109003620	EF2 20217600125	10912700200	KIT EHV 20-330/XX-A25GB 19036000225
EHV 24,5-330/24-A25GB-200 11169101125	EHV 24,5-330/11-A25GB-200 10999801125	EHV 24,5-330/41-A25GB-200 11166701125	B	G 1" cyl 04557000223	D226 (2) 20251503648	CE159A 20109003620	EF2 20217600125	10912700200	KIT EHV 24.5-330/XX-A25GB 19036300225
EHV 32-330/24-A25GB-200 11169201125	EHV 32-330/11-A25GB-200 10999901125	EHV 32-330/41-A25GB-200 11166801125	B	G 1" cyl 04557000223	D226 (2) 20251503648	CE159A 20109003620	EF3 20217700125	10912700200	KIT EHV 32-330/XX-A25GB 19036100225
EHV 50-330/24-A25GB-200 11169401125	EHV 50-330/11-A25GB-200 11127901125	EHV 50-330/41-A25GB-200 11167001125	B	G 1" cyl 04557000223	D226 (2) 20251503648	CE159A 20109003620	EF3 20217700125	10912700200	KIT EHV 50-330/XX-A25GB 19054200225

(2) For other fluids consult Parker

(3) For Fluid group 1 consideration : consult Parker

*For more adaptor options see pages 74&75

Model of valve stem
7/8" 14 UNF
(B)



Volume in Litres	Max. Working Pressure (bar)	Effective Gas vol. Litres	Max. Working pressure (PS) bar	Max Flow Rate l/min	Admissible Accumulator Temperature min/max (°C) (1)	Weight kg	Gas connection	Dimensions in mm							
								A max Height	B	C	øD	ød	øE	F on flats	G connection
EHV 10L	330	9.2	330	900	-20/+80	31	7/8" 14 UNF	587	103	66	226	23	101	70	G2"
EHV 12L	330	11.0	330	900	-20/+80	36	7/8" 14 UNF	687	103	66	226	23	101	70	G2"
EHV 20L	330	17.8	330	900	-20/+80	49	7/8" 14 UNF	897	103	66	226	23	101	70	G2"
EHV 24.5L	330	22.5	330	900	-20/+80	56	7/8" 14 UNF	1032	103	66	226	23	101	70	G2"
EHV 32L	330	32	330	900	-20/+80	81	7/8" 14 UNF	1420	103	66	226	22.5	101	70	G2"
EHV 50L	330	49	330	900	-20/+80	110	7/8" 14 UNF	1936	103	66	226	22.5	101	70	G2"

(1)Temperature range can change depending on shell and elastomer material. Please see bladder materials and Type (page 87)

Above dimensions are in mm and are subject to manufacturing tolerances.

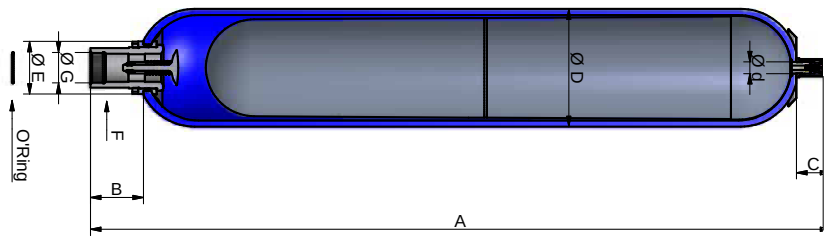

EHV Series 480 bar, 10 to 50 Litres, Marine

Standard version (Carbon Steel shell/NBR mix) compatible with mineral oils (2).
According to PED 2014/68/EU, EN 14359, Fluid Group 2 (3).

Product, Part numbers, Accessories

/24	Valve model see drawing	Adaptor*	Clamps	Support Bracket	Mounting Frame	Complete Repair Kit
/24 : PED&DNV GL		Threaded Part number	Model (quantity) Part number	Model Part number	Model Part number	Model Part number
EHV 10-480/24-A25GE-200	E	G 1" cyl	D226 (2)	CE159A	EF2	KIT EHV 10-480/XX-A25GE
11175801125		04557000223	20251503648	20109003620	20217600125	19055702525
EHV 12-480/24-A25GE-200	E	G 1" cyl	D226 (2)	CE159A	EF2	KIT EHV 12-480/BE-A25GE
11266801125		04557000223	20251503648	20109003620	20217600125	19063002525
EHV 20-480/24-A25GE-200	E	G 1" cyl	D226 (2)	CE159A	EF2	KIT EHV 20-480/XX-A25GE
11266901125		04557000223	20251503648	20109003620	20217600125	19050002525
EHV 32-480/24-A25GE-200	E	G 1" cyl	D226 (2)	CE159A	EF3	KIT EHV 32-480/XX-A25GE
11209601125		04557000223	20251503648	20109003620	20217700125	19051302525
EHV 50-480/24-A25GE-200	E	G 1" cyl	D226 (2)	CE159A	EF3	KIT EHV 50-480/XX-A25GE
11267001125		04557000223	20251503648	20109003620	20217700125	19050302525

(2) For other fluids consult Parker

(3) For Fluid group 1 consideration : consult Parker

*For more adaptor options see pages 74&75

Model of valve stem
7/8" 14 UNF
(E)

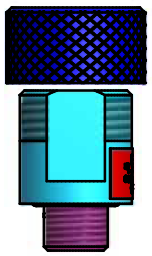

Volume in Litres	Max. Working Pressure (bar)	Effective Gas vol. Litres	Max. Working pressure (PS) bar	Max Flow Rate l/min	Admissible Accumu-lator Tempera-ture min/max (°C) (1)	Weight kg	Gas connec-tion	Dimensions in mm							
								A max Height	B	C	øD	ød	øE	F on flats	G con-nec-tion
EHV 10L	480	9	480	900	- 20/+80	33	7/8" 14 UNF	593	103	74	228	22.5	101	70	G 2"
EHV12L	480	11	480	900	- 20/+80	43	7/8" 14 UNF	693	103	74	228	22.5	101	70	G 2"
EHV 20L	480	18	480	900	- 20/+80	63	7/8" 14 UNF	903	103	74	228	22.5	101	70	G 2"
EHV 32L	480	32.0	480	900	- 20/+80	97	7/8" 14 UNF	1428	103	74	228	23	101	70	G 2"
EHV 50L	480	48.5	480	900	- 20/+80	132	7/8" 14 UNF	1968	103	99	228	23	101	70	G 2"

(1)Temperature range can change depending on shell and elastomer material. Please see bladder materials and Type (page 87)

Above dimensions are in mm and are subject to manufacturing tolerances.

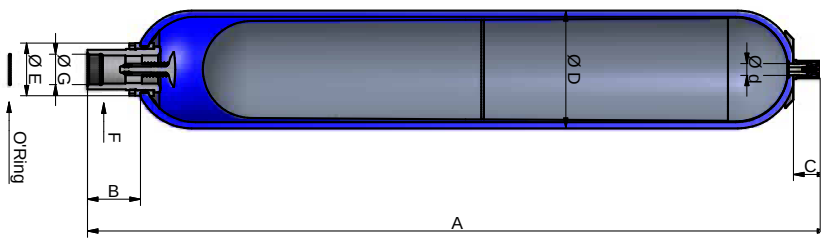

EHV Series 350 bar, 0.2 to 10 Litres

Standard version (Carbon Steel shell/NBR mix) compatible with mineral oils (2).
According to PED 2014/68/EU, EN 14359, Fluid Group 2 (3).

Product, Part numbers, Accessories

Type Part number	**Valve** see drawing	**Adaptor**** Threaded Part number	**Clamps** Model (quantity) Part number	**Support Bracket** Model Part number	**Mounting Frame** Model Part number	**Lifting Eye on gas side** Model Part number	**Complete Repair Kit** Model Part number
EHV 0.2-350/00-A20AD-200* 10876301120	D	G 1/4" cyl 4556500223	A56 (1) 20149203625				KIT EHV 0.2-350/00-A20AD 19001000220
EHV 0.5-350/00-A25BD-200* 10876401125	D	G 3/8" cyl 4556400223	E95 (1) 20250803648				KIT EHV 0.5-350/000-A25BD 19001100225
EHV 1-350/00-A25BC-200* 10845601125	C	G 3/8" cyl	E114 (1)	CE 89			KIT EHV 1-350/00-A25BC 19029700225
EHV 1-350/00-A25BB-200* 10866901125	B	04556400223	20251003648	20151903620			KIT EHV 1-350/00-A25BB 19036400225
EHV 1.6-350/90-A25BC-200 10998301125	C	G 3/8" cyl	E114 (1)	CE 89			KIT EHV 1.6-350/900-A25BC 19060700225
EHV 1.6-350/90-A25BB-200 11123501125	B	04556400223	20251003648	20151903620			KIT EHV 1.6-350/900-A25BB 19061000225
EHV 2.5-350/90-A25DC-200 10854701125	C	G 3/4" cyl	E114 (2)	CE 89			KIT EHV 2.5-350/90-A25DC 19029800225
EHV 2.5-350/90-A25DB-200 10866601125	B	04555200223	20251003648	20151903620		10912700200	KIT EHV 2.5-350/90-A25DB 19036500225
EHV 4-350/90-A25DC-200 10845401125	C	G 3/4" cyl	E168 (1)	CE108	EF1		KIT EHV 4-350/90-A25DC 19029900225
EHV 4-350/90-A25DB-200 10866101125	B	04555200223	20251303648	20118703620	20217500125	10912700200	KIT EHV 4-350/90-A25DB 19036600225
EHV 5-350/90-A25DC-200 10861201125	C	G 3/4" cyl	E114 (2)	CE 89			KIT EHV 5-350/90-A25DC 19030000225
EHV 5-350/90-A25DB-200 10866701125	B	04555200223	20251003648	20151903620		10912700200	KIT EHV 5-350/90-A25DB 19036700225
EHV 6-350/90-A25DC-200 10857401125	C	G 3/4" cyl	E168 (2)	CE108	EF1		KIT EHV 6-350/90-A25DC 19030100225
EHV 6-350/90-A25DB-200 10866201125	B	04555200223	20251303648	20118703620	20217500125	10912700200	KIT EHV 6-350/90-A25DB 19036800225
EHV 10-350/90-A25DC-200 10859701125	C	G 3/4" cyl	E168 (2)	CE108	EF1		KIT EHV 10-350/90-A25DC 19030200225
EHV 10-350/90-A25DB-200 10866301125	B	04555200223	20251303648	20118703620	20217500125	10912700200	KIT EHV 10-350/90-A25DB 19036900225

(2) For other fluids consult Parker

(3) For Fluid group 1 consideration : consult Parker

* According to Article 4.3 PED 2014/68/EU

** For more adaptor options see pages 74/75.

Model of valve stem
7/8" 14 UNF
(B)



Model of valve stem
integrated
7/8"14 UNF
(C)



Model of valve stem
integrated
5/8" 18 UNF
(D)



Type Part number	Effective Gas vol. Litres	Max. Working pressure (PS) bar	Max Flow Rate l/min	Admissible Accumulator Temperature min/max (°C) (1)	Weight kg	Gas connection	Dimensions in mm							
							A max Height	B	C	øD	ød	øE	F on flats	G connection
EHV 0.2-350/00-A20AD-200* 10876301120	0.17	350	120	- 6/+80	2.5	5/8" 18 UNF	268	38	27	58	16	39	24	G ½"
EHV 0.5-350/00-A25BD-200* 10876401125	0.6	350	240	- 20/+80	3	5/8" 18 UNF	260	54	27	91	16	50	32	G ¾"
EHV 1-350/00-A25BC-200* 10845601125	1	350	240	- 20/+80	6	7/8" 14 UNF	330	54	66	116	22.5	50	32	G ¾"
EHV 1-350/00-A25BB-200* 10866901125						7/8" 14 UNF								
EHV 1.6-350/90-A25BC-200 10998301125	1.6	350	240	- 20/+80	8	7/8" 14 UNF	442	54	66	116	22.5	50	32	G ¾"
EHV 1.6-350/90-A25BB-200 11123501125						7/8" 14 UNF								
EHV 2.5-350/90-A25DC-200 10854701125	2	350	450	- 20/+80	11	7/8" 14 UNF	549	66	66	116	22.5	68	50	G 1 ¼"
EHV 2.5-350/90-A25DB-200 10866601125						7/8" 14 UNF								
EHV 4-350/90-A25DC-200 10845401125	3.7	350	450	- 20/+80	15	7/8" 14 UNF	434	65	66	170	22.5	68	50	G 1 ¼"
EHV 4-350/90-A25DB-200 10866101125						7/8" 14 UNF								
EHV 5-350/90-A25DC-200 10861201125	5	350	450	- 20/+80	17	7/8" 14 UNF	898	66	66	116	22.5	68	50	G 1 ¼"
EHV 5-350/90-A25DB-200 10866701125						7/8" 14 UNF								
EHV 6-350/90-A25DC-200 10857401125	6.0	350	450	- 20/+80	20	7/8" 14 UNF	560	65	66	170	22.5	68	50	G 1 ¼"
EHV 6-350/90-A25DB-200 10866201125						7/8" 14 UNF								
EHV 10-350/90-A25DC-200 10859701125	10	350	450	- 20/+80	31	7/8" 14 UNF	825	65	66	170	22.5	68	50	G 1 ¼"
EHV 10-350/90-A25DB-200 10866301125						7/8" 14 UNF								

(1)Temperature range can change depending on shell and elastomer material. Please see bladder materials and Type (page 87)

Above dimensions are in mm and are subject to manufacturing tolerances.

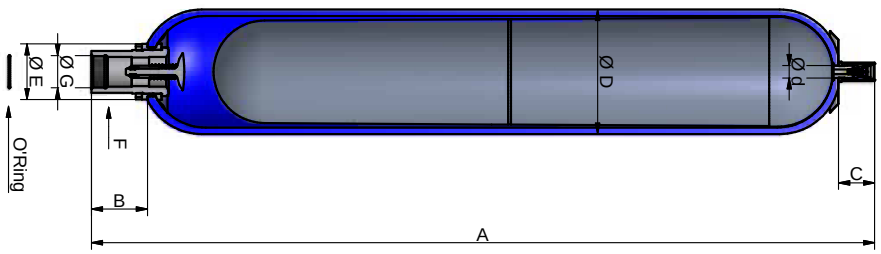

EHV Series 350 bar, 0,5 to 10 Litres, Marine

Standard version (Carbon Steel shell/NBR mix) compatible with mineral oils (2).
According to PED 2014/68/EU, EN 14359, Fluid Group 2 (3).

Product , Part numbers, Accessories

/43 /24	/13 /11	/23 /41	Valve model see drawing	Adaptor*	Clamps	Support Bracket	Mounting Frame	Lifting Eye on gas side	Complete Repair Kit
/24 : PED&DNV GL /43 : PED Article 4.3& DNV GL	**/11 : PED&BV MARINE /13 : PED Article 4.3& BV MARINE**	**/41 : PED&ABS /23 : PED Article 4.3&ABS**		Threaded Part number	Model (quantity) Part number	Model Part number	Model Part number	Model Part number	Model Part number
EHV 0,5-350/43-A25BD-200 11151101125		EHV 0,5-350/23-A25BD-200 11151001125	D	G 3/8" cyl 04556400223	E95 (1) 20250803648				KIT EHV 0.5-350/XX-A25BD 19001100225
EHV 1-350/43-A25BB-200 11168101125	EHV 1-350/13-A25BB-200 11149501125	EHV 1-350/23-A25BB-200 11165801125	B	G 3/8" cyl 04556400223	E114 (1) 20251003648	CE 89 20151903620			KIT EHV 1-350/XX-A25BB 19036400225
EHV 1,6-350/24-A25BB-200 11168201125	EHV 1,6-350/11-A25BB-200 11163301125	EHV 1,6-350/41-A25BB-200 11165901125	B	G 3/8" cyl 04556400223	E114 (1) 20251003648	CE 89 20151903620			KIT EHV 1.6-350/XX-A25BB 19061000225
EHV 2,5-350/24-A25DB-200 11168301125	EHV 2,5-350/11-A25DB-200 11163401125	EHV 2,5-350/41-A25DB-200 11166001125	B	G 3/4" cyl 04555200223	E114 (2) 20251003648	CE 89 20151903620		19036500225	KIT EHV 2.5-350/XX-A25DB 19036500225
EHV 4-350/24-A25DB-200 11168501125	EHV 4-350/11-A25DB-200 10998101125	EHV 4-350/41-A25DB-200 11166201125	B	G 3/4" cyl 04555200223	E168 (1) 20251303648	CE108 20118703620	EF1 20217500125	10912700200	KIT EHV 4-350/XX-A25DB 19036600225
EHV 5-350/24-A25DB-200 11168401125	EHV 5-350/11-A25DB-200 11163501125	EHV 5-350/41-A25DB-200 11166101125	B	G 3/4" cyl 04555200223	E114 (2) 20251003648	CE 89 20151903620		10912700200	KIT EHV 5-350/XX-A25DB 19036700225
EHV 6-350/24-A25DB-200 11168601125	EHV 6-350/11-A25DB-200 11163601125	EHV 6-350/41-A25DB-200 11166301125	B	G 3/4" cyl 04555200223	E168 (2) 20251303648	CE108 20118703620	EF1 20217500125	10912700200	KIT EHV 6-350/XX-A25DB 19036800225
EHV 10-350/24-A25DB-200 11168701125	EHV 10-350/11-A25DB-200 11163701125	EHV 10-350/41-A25DB-200 11166401125	B	G 3/4" cyl 04555200223	E168 (2) 20251303648	CE108 20118703620	EF1 20217500125	10912700200	KIT EHV 10-350/XX-A25DB 19036900225

(2) For other fluids consult Parker

(3) For Fluid group 1 consideration : consult Parker

* For more adaptor options see pages 74&75.

Model of valve stem
7/8" 14 UNF
(B)



Model of valve stem
integrated
5/8" 18 UNF
(D)



Volume in Litres	Max. Working Pressure (bar)	Effective Gas vol. Litres	Max. Working pressure (PS) bar	Max Flow Rate l/min	Admissible Accumulator Temperature min/max (°C) (1)	Weight (kg)	Gas connection	Dimensions in mm							
								A max Height	B	C	øD	ød	øE	F on flats	G connection
EHV 0,5L	330	0.6	350	240	- 20/+80	3	5/8" 18 UNF	260	54	27	91	16	50	32	G ¾"
EHV 1L	350	1	350	240	- 20/+80	6	7/8" 14 UNF	330	54	66	116	22.5	50	32	G ¾"
EHV 1.6L	350	1.6	350	240	- 20/+80	8	7/8" 14 UNF	442	54	66	116	22.5	50	32	G ¾"
EHV 2.5L	350	2.4	350	450	- 20/+80	11	7/8" 14 UNF	549	66	66	116	22.5	68	50	G 1 ¼"
EHV 4L	350	3.7	350	450	- 20/+80	15	7/8" 14 UNF	434	65	66	170	22.5	68	50	G 1 ¼"
EHV 5L	350	5	350	450	- 20/+80	17	7/8" 14 UNF	898	66	66	116	22.5	68	50	G 1 ¼"
EHV 6L	350	6	350	450	- 20/+80	20	7/8" 14 UNF	560	65	66	170	22.5	68	50	G 1 ¼"
EHV 10L	350	10	350	450	- 20/+80	31	7/8" 14 UNF	825	65	66	170	22.5	68	50	G 1 ¼"

(1)Temperature range can change depending on shell and elastomer material. Please see bladder materials and Type (page 87)

Above dimensions are in mm and are subject to manufacturing tolerances.

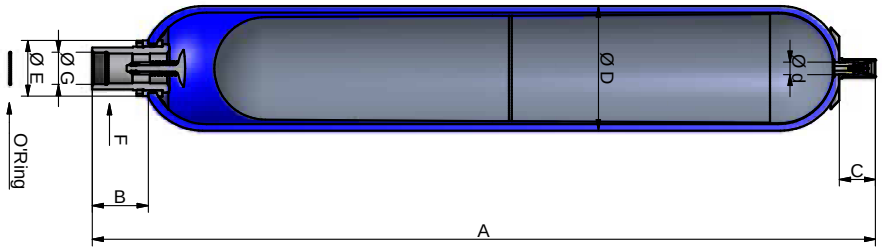

EHV Series 480 bar, 10 to 50 Litres

Standard version (Carbon Steel shell/NBR mix) compatible with mineral oils (2).
According to PED 2014/68/EU, EN 14359, Fluid Group 2 (3).

Product Prices, Part numbers, Accessories

Type Part number	**Adaptor***	**Clamps**	**Support Bracket**	**Mounting Frame**	**Complete Repair Kit**
	Threaded Part number	Model (quantity) Part number	Model Part number	Model Part number	Model Part number
EHV 10-480/90-A25GE-200 11218201125	G 1" cyl 04557000223	D226 (2) 20251503648	CE159A 20109003620	EF2 20217600125	KIT EHV 10-480/90-A25GE 19055702525
EHV 12-480/90-A25GE-200 11218301125	G 1" cyl 04557000223	D226 (2) 20251503648	CE159A 20109003620	EF2 20217600125	KIT EHV 12-480/90 19063002525
EHV 20-480/90-A25GE-200 11218401125	G 1" cyl 04557000223	D226 (2) 20251503648	CE159A 20109003620	EF2 20217600125	KIT EHV 20-480/90-A25GE 19050002525
EHV 32-480/90-A25GE-200 11218501125	G 1" cyl 04557000223	D226 (2) 20251503648	CE159A 20109003620	EF3 20217700125	KIT EHV 32-480/90-A25GE 19051302525
EHV 50-480/90-A25GE-200 11218601125	G 1" cyl 04557000223	D226 (2) 20251503648	CE159A 20109003620	EF3 20217700125	KIT EHV 50-480/90-A25GE 19068102525

(2) For other fluids consult Parker

(3) For Fluid group 1 consideration : consult Parker

For pre-charge over 300 bar please consult Division

* For more adaptor options see pages 74&75.

Model of valve stem
7/8" 14 UNF
(E)

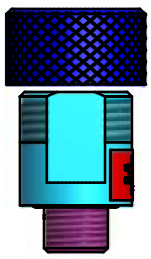

Type	Effective Gas vol. Litres	Max. Working pressure (PS) bar	Max Flow Rate l/min	Admissible Accumulator Temperature min/max (°C) (1)	Weight kg	Gas connection	Dimensions in mm							
							A max Height	B	C	øD	ød	øE	F on flats	G connection
EHV 10-480/90-A25GE-200	9.2	480	900	- 20/+80	33	7/8" 14 UNF	593	103	74	228	22.5	101	70	G 2"
EHV 12-480/90-A25GE-200	11	480	900	- 20/+80	43	7/8" 14 UNF	693	103	74	228	22.5	101	70	G 2"
EHV 20-480/90-A25GE-200	17.8	480	900	- 20/+80	63	7/8" 14 UNF	903	103	74	228	22.5	101	70	G 2"
EHV 32-480/90-A25GE-200	32	480	900	- 20/+80	97	7/8" 14 UNF	1428	103	74	228	22.5	101	70	G 2"
EHV 50-480/90-A25GE-200	48.5	480	900	- 20/+80	132	7/8" 14 UNF	1943	103	74	228	22.5	101	70	G 2"

(1)Temperature range can change depending on shell and elastomer material. Please see bladder materials and Type (page 87)

Above dimensions are in mm and are subject to manufacturing tolerances.

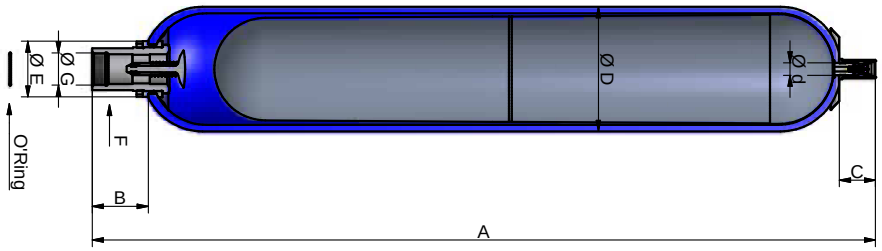

EHV Series 690 bar, 1 to 54 Litres

Standard version (Carbon Steel shell/NBR mix) compatible with mineral oils (2).
According to PED 2014/68/EU, Fluid Group 2 (3).

Products, Part numbers, Accessories

Type Part number	**Adaptor****	**Clamps**	**Support Bracket**	**Lifting Eye on gas side**	**Complete Repair Kit**
	Threaded Part number	Model (quantity) Part number	Model Part number	Model Part number	Model Part number
EHV 1-690/00-A25CE-200* 10910101125	04579500223	20251003648	20151903620	10912700200	KIT EHV 1-690/00-A25CE 19043500225
EHV 2.5-690/90-A25CE-200 10910201125	04579500223	20251003648	20151903620	10912700200	KIT EHV 2,5-690/00-A25CE 19043600225
EHV 5-690/90-A25CE-200 10910301125	04579500223	20251003648	20151903620	10912700200	KIT EHV 5-690/00-A25CE 19043700225

Type Part number	**Adaptor****	**Clamps**	**Support Bracket**	**Lifting Eye on gas side**	**Complete Repair Kit**
	Threaded Part number	Model (quantity) Part number	Model Part number	Model Part number	Model Part number
EHV 12-690/90-A25GE-200 1203V-DC-691	Consult Parker	11060-DEE	Consult Parker	Consult Parker	KIT EHV 12-690/90-A25GE 19048200225
EHV 20-690/90-A25GE-200 2003V-DC-691		11060-DEE			KIT EHV 20-690/90-A25GE 19048300225
EHV 37-690/90-A25GE-200 3703V-DC-691		11060-DEE			KIT EHV 32-690/90-A25GE 19048400225
EHV 54-690/90-A25GE-200 5403V-DC-691		11060-DEE			KIT EHV 50-690/90-A25GE 19048500225

For pre-charge over 300 bar please consult Division

(2) For other fluids consult Parker

(3) For Fluid group 1 consideration : consult Parker

* According to Article 4.3 PED 2014/68/EU

**For more adaptor options see pages 74&75.

Model of valve stem
7/8" 14 UNF
(E)

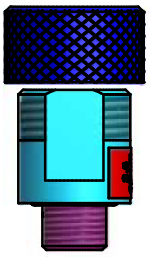

Type	Effective Gas vol. Litres	Max. Working pressure (PS) bar	Max Flow Rate l/min	Admissible Accumulator Temperature min/max (°C) (1)	Weight kg	Gas connec-tion	Dimensions in mm							
							A max Height	B	C	øD	ød	øE	F on flats	G connec-tion
EHV 1-690/00-A25CE-200*	1.1	690	360	- 20/+80	9	7/8" 14 UNF	376	68	69	122	22.5	68	45	G 1"
EHV 2.5-690/90-A25CE-200	2.4	690	360	- 20/+80	15	7/8" 14 UNF	551	68	69	122	22.5	68	45	G 1"
EHV 5-690/90-A25CE-200	5	690	360	- 20/+80	29	7/8" 14 UNF	900	68	69	122	22.5	68	45	G 1"

Type	Effective Gas vol. Litres	Max. Working pressure (PS) bar	Max Flow Rate l/min	Admissible Accumulator Temperature min/max (°C) (1)	Weight kg	Gas connec-tion	Dimensions in mm							
							A max Height	B	C	øD	ød	øE	F on flats	G connec-tion**
EHV 12-690/90-A25GE-200	11	690	900	- 20/+80	97	7/8" 14 UNF	682	84	166	267	50	110	77	G 2"
EHV 20-690/90-A25GE-200	16.5	690	900	- 20/+80	134	7/8" 14 UNF	892	84	166	267	50	110	77	G 2"
EHV 37-690/90-A25GE-200	33.4	690	900	- 20/+80	227	7/8" 14 UNF	1417	84	166	267	50	110	77	G 2"
EHV 54-690/90-A25GE-200	48	690	900	- 20/+80	318	7/8" 14 UNF	1932	84	166	267	50	110	77	G 2"

(1)Temperature range can change depending on shell and elastomer material. Please see bladder materials and Type (page 87)

Above dimensions are in mm and are subject to manufacturing tolerances.

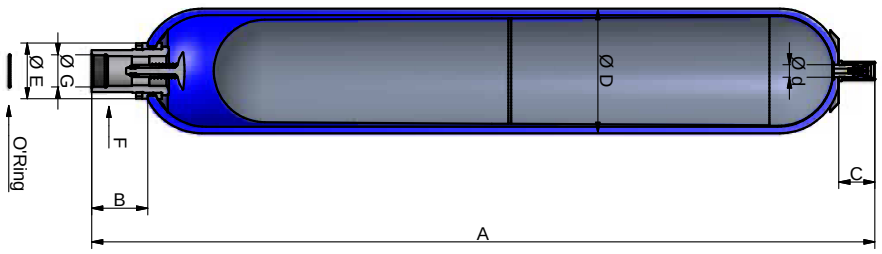

EHVF Series 330 bar, 10 to 57 Litres
Flanged Fluid Port

Standard version (Carbon Steel shell/NBR mix) compatible with mineral oils (2).
According to PED 2014/68/EU, EN 14359, Fluid Group 2 (3).

Product , Part numbers, Accessories

Type Part number	**Kit Flange***	**Clamps**	**Support Bracket**	**Mounting Frame**	**Lifting Eye on gas side**	**Complete Repair Kit**
	Type Part number	Model (quantity) Part number	Model Part number	Model Part number	Model Part number	Model Part number
EHVF 10-330/90-A25RA-200 10844901125	BR 400-38 35132400123	D226 (2) 20251503648	CE 159A 20109003620	EF2 20217600125	 10912700200	KIT EHVF 10-330/90-A25RA 19034600225
EHVF 12-330/90-A25RA-200 10867301125	BR 400-38 35132400123	D226 (2) 20251503648	CE 159A 20109003620	EF2 20217600125	 10912700200	KIT EHVF 12-330/90-A25RA 19034700225
EHVF 20-330/90-A25RA-200 10845001125	BR 400-38 35132400123	D226 (2) 20251503648	CE 159A 20109003620	EF2 20217600125	 10912700200	KIT EHVF 20-330/90-A25RA 19034800225
EHVF 24,5-330/90-A25RA-200 10845101125	BR 400-38 35132400123	D226 (2) 20251503648	CE 159A 20109003620	EF2 20217600125	 10912700200	KIT EHVF 24.5-330/90-A25RA 19035100225
EHVF 32-330/90-A25RA-200 10845201125	BR 400-38 35132400123	D226 (2) 20251503648	CE 159A 20109003620	EF3 20217700125	 10912700200	KIT EHVF 32-330/90-A25RA 19034900225
EHVF 42-330/90-A25RA-200 11132501125	BR 400-38 35132400123	D226 (2) 20251503648	CE 159A 20109003620	EF3 20217700125	 10912700200	KIT EHVF 50-330/90-A25RA 19062200225
EHVF 50-330/90-A25RA-200 11077001125	BR 400-38 35132400123	D226 (2) 20251503648	CE 159A 20109003620	EF3 20217700125	 10912700200	KIT EHVF 50-330/90-A25RA 19054400225
EHVF 57-330/90-A25RA-200 11132601125	BR 400-38 35132400123	D226 (2) 20251503648	CE 159A 20109003620	EF3 20217700125	 10912700200	KIT EHVF 57-330/90-A25RA 19062300225

* see page 76

(2) For other fluids consult Parker

(3) For Fluid group 1 consideration : consult Parker

Model of valve stem
5/8" 18 UNF
(A)



Tel: +45 63 12 83 00 | Email: ps@hymatik.com | www.hymatik.com | Hvidkaervej 27a, DK-5250 Odense SV, Denmark

Type	Effective Gas vol. Litres	Max. Working pressure (PS) bar	Max Flow Rate l/min	Admissible Accumulator Temperature min/max (°C) (1)	Weight kg	Gas connection	Dimensions in mm									
							A max Height	B	C	øD	ød	øE	F on flats	G connection**	ØL	M
EHVF 10-330/90-A25RA-200	9.2	330	900	- 20/80	31	5/8"18 UNF	627	143	66	226	22.5	101	70	34	63.8	12.5
EHVF 12-330/90-A25RA-200	11	330	900	- 20/80	36	5/8"18 UNF	727	143	66	226	22.5	101	70	34	63.8	12.5
EHVF 20-330/90-A25RA-200	17.8	330	900	- 20/80	49	5/8"18 UNF	937	143	66	226	22.5	101	70	34	63.8	12.5
EHVF 24,5-330/90-A25RA-200	22.5	330	900	- 20/80	56	5/8"18 UNF	1072	143	66	226	22.5	101	70	34	63.8	12.5
EHVF 32-330/90-A25RA-200	32	330	900	- 20/80	81	5/8"18 UNF	1460	143	66	226	22.5	101	70	34	63.8	12.5
EHVF 42-330/90-A25RA-200	42	330	900	- 20/80	87	5/8"18 UNF	1602	143	66	226	22.5	101	70	34	63.8	12.5
EHVF 50-330/90-A25RA-200	48.5	330	900	- 20/80	110	5/8"18 UNF	1976	143	66	226	22.5	101	70	34	63.8	12.5
EHVF 57-330/90-A25RA-200	51	330	900	- 20/80	116	5/8"18 UNF	2072	143	66	226	22.5	101	70	34	63.8	12.5

Note: Connection (norme ISO 6162) Flange 1 1/2" SAE 6000 PSI

(1)Temperature range can change depending on shell and elastomer material. Please see bladder materials and Type (page 87)

Above dimensions are in mm and are subject to manufacturing tolerances.

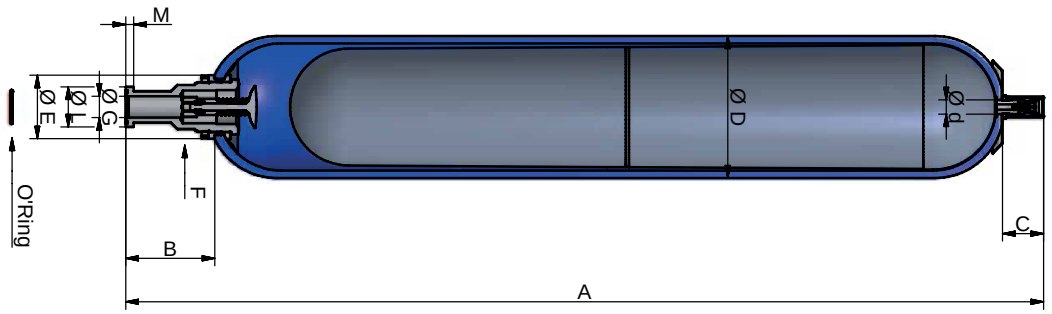

EHVF Series 350 bar, 2.5 to 10 Litres
Flanged Fluid Port

Standard version (Carbon Steel shell/NBR mix) compatible with mineral oils (2).
According to PED 2014/68/EU, EN 14359, Fluid Group 2 (3).

Product , Part numbers, Accessories, Dimensions

Type Part number	**Flange***	**Clamps**	**Support Bracket**	**Mounting Frame**	**Lifting Eye on gas side**	**Complete Repair Kit**
	Type Part number	Model (quantity) Part number	Model Part number	Model Part number	Model Part number	Model Part number
EHVF 2.5-350/90-A25SC 10861501125	BR 400-25 35132600123	E114 (2) 20251003648	CE89 20151903620	-	10912700200	KIT EHVF 2.5-350/90-A25SC 19035300225
EHVF 4-350/90-A25SC 10857601125	BR 400-25 35132600123	E168 (1) 20251303648	CE108 20118703620	EF1 20217500125	10912700200	KIT EHVF 4-350/90-A25SC 19035400225
EHVF 5-350/90-A25SC 10861601125	BR 400-25 35132600123	E114 (2) 20251003648	CE89 20151903620	-	10912700200	KIT EHVF 5-350/90-A25SC 19035500225
EHVF 6-350/90-A25SC 10857701125	BR 400-25 35132600123	E168 (1) 20251303648	CE108 20118703620	EF1 20217500125	10912700200	KIT EHVF 6-350/90-A25SC 19035600225
EHVF 10-350/90-A25SC 10859901125	BR 400-25 35132600123	E168 (2) 20251303648	CE108 20118703620	EF1 20217500125	10912700200	KIT EHVF 10-350/90-A25SC 19035700225

*see flanges page 76

(2) For other fluids consult Parker

(3) For Fluid group 1 consideration : consult Parker

Model of valve stem
integrated
7/8”14 UNF
(C)



Type	Effective Gas vol. Litres	Max. Working pressure (PS) bar	Max Flow Rate l/min	Admissible Accumulator Temperature min/max (°C) (1)	Weight kg	Gas connec-tion	Dimensions in mm									
							A max Height	B	C	øD	ød	øE	F on flats	G connection **	ØL	M
EHVF 2.5-350/90-A25SC	2.4	350	450	- 20/80	11	7/8" 14 UNF	595	111	66	116	22.5	68	50	22	47.9	9.5
EHVF 4-350/90-A25SC	3.7	350	450	- 20/80	15	7/8" 14 UNF	480	110	66	170	22.5	68	50	22	47.9	9.5
EHVF 5-350/90-A25SC	5.0	350	450	- 20/80	17	7/8" 14 UNF	944	111	66	116	22.5	68	50	22	47.9	9.5
EHVF 6-350/90-A25SC	6.0	350	450	- 20/80	20	7/8" 14 UNF	606	110	66	170	22.5	68	50	22	47.9	9.5
EHVF 10-350/90-A25SC	10	350	450	- 20/80	31	7/8" 14 UNF	871	110	66	170	22.5	68	50	22	47.9	9.5

Note: Connection (norme ISO 6162): 1" SAE 6000 PSI. Flange PN400 DN25

(1)Temperature range can change depending on shell and elastomer material. Please see bladder materials and Type (page 87)

Above dimensions are in mm and are subject to manufacturing tolerances.

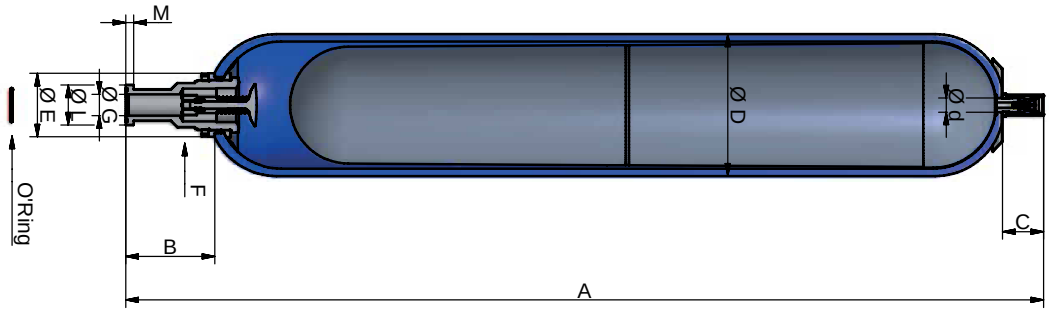

EHV Series 330 bar, 10 to 57 Litres
High Flow fluid port, 1200 l/min

Standard version (Carbon Steel shell/NBR mix) compatible with mineral oils (2).
According to PED 2014/68/EU, EN 14359, Fluid Group 2 (3).

Product , Part numbers, Accessories, Dimensions

Type Part number	**Adaptor***	**Clamps**	**Support Bracket**	**Mounting Frame**	**Lifting Eye on gas side**	**Complete Repair Kit**
	Threaded Part number	Model (quantity) Part number	Model Part number	Model Part number	Model Part number	Model Part number
EHV 10-330/90-A25HA-200 10874801125	G 1" cyl 04557000223	D226 (2) 20251503648	CE 159A 20109003620	EF2 20217600125	10912700200	KIT EHV 10-330/90-A25HA-200 19028900225
EHV 12-330/90-A25HA-200 10874901125	G 1" cyl 04557000223	D226 (2) 20251503648	CE 159A 20109003620	EF2 20217600125	10912700200	KIT EHV 12- 330/90-A25HA-200 19032100225
EHV 20-330/90-A25HA-200 10846301125	G 1" cyl 04557000223	D226 (2) 20251503648	CE 159A 20109003620	EF2 20217600125	10912700200	KIT EHV 20- 330/90-A25HA-200 19029000225
EHV 24.5-330/90-A25HA-200 10875001125	G 1" cyl 04557000223	D226 (2) 20251503648	CE 159A 20109003620	EF2 20217600125	10912700200	KIT EHV 24.5-330/90-A25HA-200 19029400225
EHV 32-330/90-A25HA-200 10846501125	G 1" cyl 04557000223	D226 (2) 20251503648	CE 159A 20109003620	EF3 20217700125	10912700200	KIT EHV 32-330/90-A25HA-200 19029100225
EHV 42-330/90-A25HA-200 11145201125	G 1" cyl 04557000223	D226 (2) 20251503648	CE 159A 20109003620	EF3 20217700125	10912700200	KIT EHV 42-330/90-A25HA-200 19060800225
EHV 50-330/90-A25HA-200 11091501125	G 1" cyl 04557000223	D226 (2) 20251503648	CE 159A 20109003620	EF3 20217700125	10912700200	KIT EHV 50-330/90-A25HA-200 19054100225
EHV 57-330/90-A25HA-200 11145401125	G 1" cyl 04557000223	D226 (2) 20251503648	CE 159A 20109003620	EF3 20217700125	10912700200	KIT EHV 57-330/90-A25HA-200 19060900225

(2) For other fluids consult Parker

(3) For Fluid group 1 consideration : consult Parker

* For more adaptor options
see pages 74 & 75.

Model of valve stem
5/8" 18 UNF
(A)



Tel: +45 63 12 83 00 | Email: ps@hymatik.com | www.hymatik.com | Hvidkaervej 27a, DK-5250 Odense SV, Denmark

Type	Effective Gas vol. Litres	Max. Working pressure (PS) bar	Max Flow Rate l/min	Admissible Accumulator Temperature min/max (°C) (1)	Weight kg	Gas connec-tion	Dimensions in mm							
							A max Height	B	C	øD	ød	øE	F on flats	G connection
EHV 10-330/90-A25HA-200	9.2	330	1200	- 20/80	31	5/8"18 UNF	587	103	66	226	22.5	101	70	G 2"
EHV 12-330/90-A25HA-200	11	330	1200	- 20/80	36	5/8"18 UNF	687	103	66	226	22.5	101	70	G 2"
EHV 20-330/90-A25HA-200	17.8	330	1200	- 20/80	49	5/8"18 UNF	897	103	66	226	22.5	101	70	G 2"
EHV 24.5-330/90-A25HA-200	22.5	330	1200	- 20/80	56	5/8"18 UNF	1032	103	66	226	22.5	101	70	G 2"
EHV 32-330/90-A25HA-200	32	330	1200	- 20/80	81	5/8"18 UNF	1420	103	66	226	22.5	101	70	G 2"
EHV 42-330/90-A25HA-200	42	330	1200	- 20/80	87	5/8"18 UNF	1562	103	66	226	22.5	101	70	G 2"
EHV 50-330/90-A25HA-200	48.5	330	1200	- 20/80	110	5/8"18 UNF	1936	103	66	226	22.5	101	70	G 2"
EHV 57-330/90-A25HA-200	51	330	1200	- 20/80	116	5/8"18 UNF	2032	103	66	226	22.5	101	70	G 2"

(1)Temperature range can change depending on shell and elastomer material. Please see bladder materials and Type (page 87)

Above dimensions are in mm and are subject to manufacturing tolerances.

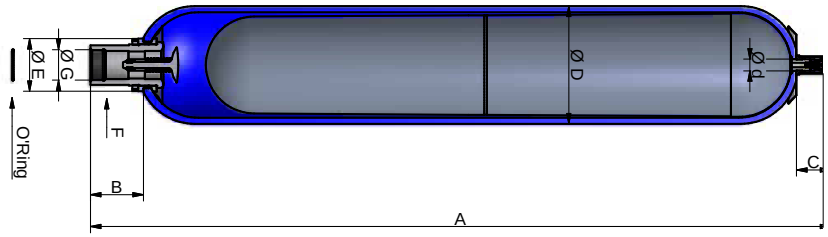

EHV-DA Series 350 bar, 2.5 to 10 Litres High Flow fluid port, 570 l/min

Standard version (Carbon Steel shell/NBR mix) compatible with mineral oils (2).
According to PED 2014/68/EU, EN 14359, Fluid Group 2 (3).

Product, Part numbers, Accessories, Dimensions

Type Part number	**Adaptor***	**Clamps**	**Support Bracket**	**Mounting Frame**	**Lifting Eye**	**Complete Repair Kit**
	Threaded Part number	Model (quantity) Part number	Model Part number	Model Part number	Model Part number	Model Part number
EHV 2.5-350/90-A25EC-200 10846101125	G ¾" cyl 04555200223	E114 (2) 20251003648	CE 89 20151903620	-	-	KIT EHV 2.5-350/90-A25EC 19029800225
EHV 4-350/90-A25EC-200 10846701125	G ¾" cyl 04555200223	E168 (2) 20251303648	CE108 20118703620	EF1 20217500125	-	KIT EHV 4-350/90-A25EC 19029900225
EHV 5-350/90-A25EC-200 10874601125	G ¾" cyl 04555200223	E114 (2) 20251003648	CE 89 20151903620	-	-	KIT EHV 5-350/90-A25EC 19030000225
EHV 6-350/90-A25EC-200 10874701125	G ¾" cyl 04555200223	E168 (2) 20251303648	CE108 20118703620	EF1 20217500125	-	KIT EHV 6-350/90-A25EC 19030100225
EHV 10-350/90-A25EC-200 10845901125	G ¾" cyl 04555200223	E168 (2) 20251303648	CE108 20118703620	EF1 20217500125	10912700200	KIT EHV 10- 350/90-A25EC 19030200225

* For more adaptor options see pages 74 & 75.

(2) For other fluids consult Parker

(3) For Fluid group 1 consideration : consult Parker

Model of valve stem
integrated
7/8"14 UNF
(C)



Type	Effective Gas vol. Litres	Max. Working pressure (PS) bar	Max Flow Rate l/min	Admissible Accumulator Temperature min/max (°C) (1)	Weight kg	Gas connection	Dimensions in mm							
							A max Height	B	C	øD	ød	øE	F on flats	G connection
EHV 2.5-350/90-A25EC-200	2.4	350	570	- 20/+80	11	7/8" 14 UNF	549	66	66	116	22.5	68	50	G 1¼"
EHV 4-350/90-A25EC-200	3.7	350	570	- 20/+80	15	7/8" 14 UNF	434	65	66	170	22.5	68	50	G 1¼"
EHV 5-350/90-A25EC-200	5	350	570	- 20/+80	17	7/8" 14 UNF	898	66	66	116	22.5	68	50	G 1¼"
EHV 6-350/90-A25EC-200	6	350	570	- 20/+80	20	7/8" 14 UNF	560	65	66	170	22.5	68	50	G 1¼"
EHV 10-350/90-A25EC-200	10	350	570	- 20/+80	31	7/8" 14 UNF	825	65	66	170	22.5	68	50	G 1¼"

(1)Temperature range can change depending on shell and elastomer material. Please see bladder materials and Type (page 87)

Above dimensions are in mm and are subject to manufacturing tolerances.

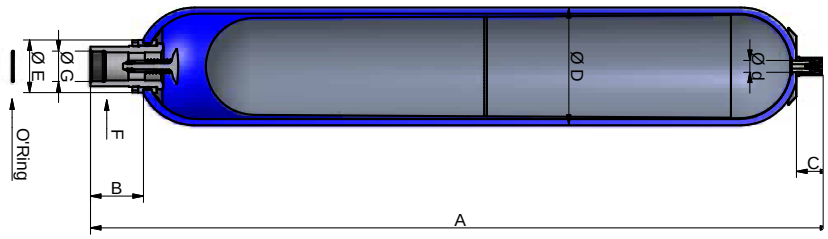

IHV Series 70 bar, 10 to 50 Litres

Standard version (**Stainless Steel** shell/compatible with mineral oils) (2).

According to ASME VIII Division I U STAMPED

Product Prices, Part numbers, Accessories, Dimensions

Type Part number	Part Number	**Adaptor**	**Flange**	**Clamps**	**Support Bracket**	**Complete Repair Kit**
		Threaded Part number	Threaded Part number	Model (quantity) Part number	Model Part number	Model Part number
IHV 10-70	J30100706169R80EX	Various adaptors and flanges available Consult Division		D226 (2) 20251503648	CE159A 20109003620	8590018-xxyy 8590019-xxyy
IHV 12-70	JN301207052CXR25 JN30120705CCXR25			D226 (2) 20251503648	CE159A 20109003620	8590020-xxyy 8590021-xxyy
IHV 20-70	JN302007052CXR25 KNPC20#1500NBR25			D226 (2) 20251503648	CE159A 20109003620	8590022-xxyy 8590023-xxyy
IHV 24,5-70	JN302407052CXR25 JN30240705CCXR25			D226 (2) 20251503648	CE159A 20109003620	8590024-xxyy 8590025-xxyy
IHV 32-70	JN303207052CXR25 U10320704000025			D226 (2) 20251503648	CE159A 20109003620	8590026-xxyy 8590027-xxyy
IHV 50-70	JN305007052CXR25 U10500706C63T25FCH			D226 (2) 20251503648	CE159A 20109003620	8590028-xxyy 8590029-xxyy

Available in PED 2014/68/EU (EHV version)

Possibility in carbon steel material, Duplex and Superduplex

(2) For other fluids consult Parker

Type	Effective Gas vol. Litres	Max. Working pressure (PS) bar	Admissible Accumulator Temperature min/max (°C)	Weight kg	Dimensions in mm				
					A max Height	øD	B (G2")	B (3/4" BSP)	C
IHV 10.70	11.5	70	-20/100	27	394	220	103	-	66
							-	68	
IHV 12.70	14.5	70	-20/100	32	493	220	103	-	66
								68	
IHV 20.70	21.2	70	-20/100	41	703	220	103	-	66
							-	68	
IHV 24,5.70	25.5	70	-20/100	50	851	220	103	-	66
								68	
IHV 32.70	38.0	70	-20/100	65	1225	220	103	-	66
							-	68	
IHV 50.70	54.5	70	-20/100	87	1740	220	103	-	66
							-	68	

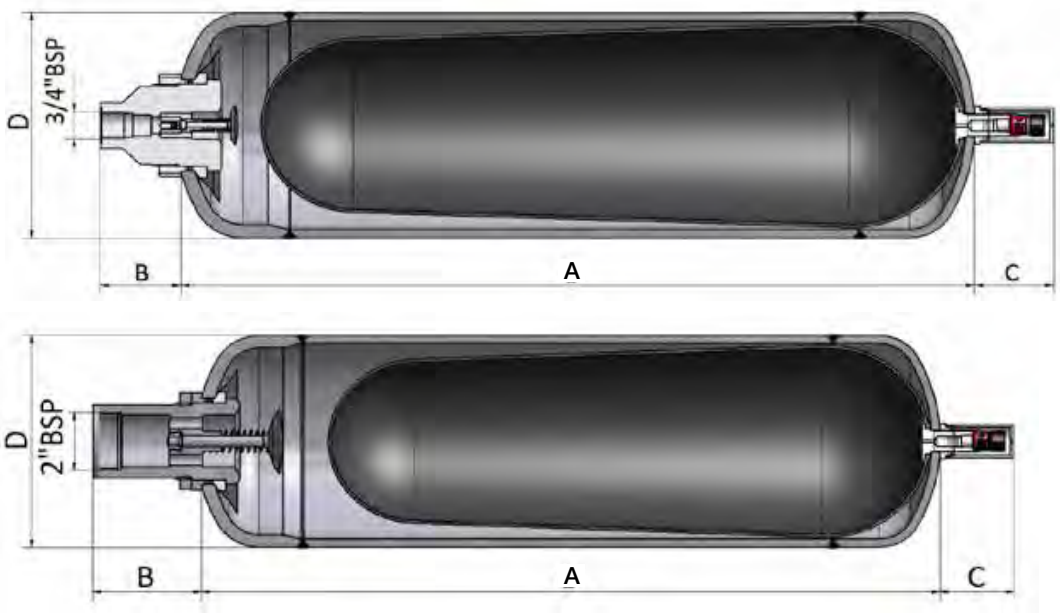

IHV Series 110 bar, 10 to 50 Litres

Standard version (**Stainless Steel** shell/compatible with mineral oils) (2).

According to ASMEVIII Division I U STAMPED

Type	Part Number	Adaptor	Flange	Clamps	Support Bracket	Complete Repair Kit
				Model (quantity) Part number	Model Part number	Model Part number
IHV 10-120	JL301011052CXR25 0104012R15102	Various adaptors and flanges available Consult Division		D226 (2) 20251503648	CE159A 20109003620	8590018-xxyy 8590019-xxyy
IHV 12-110	JL301211052CXR25 JL30121105CCXR25			D226 (2) 20251503648	CE159A 20109003620	8590020-xxyy 8590021-xxyy
IHV 20-122	JL302011052CXR25 01050122U01125FCH			D226 (2) 20251503648	CE159A 20109003620	8590022-xxyy 8590023-xxyy
IHV 24,5-110	JL302411052CXR25 JL30241105CCXR25			D226 (2) 20251503648	CE159A 20109003620	8590024-xxyy 8590025-xxyy
IHV 32-129	JL30321105CCXR25 K1032129500XT40			D226 (2) 20251503648	CE159A 20109003620	8590026-xxyy 8590027-xxyy
IHV 50-122	JL305011052CXR25 01070122U01025FCH			D226 (2) 20251503648	CE159A 20109003620	8590028-xxyy 8590029-xxyy

Available in PED 2014/68/EU (EHV version)

Available in carbon steel version, Duplex and Superduplex

(2) For other fluids consult Parker

Type	Effective Gas vol. Litres	Max. Working pressure (PS) bar	Admissible Accumulator Temperature min/max (°C)	Weight kg	Dimensions in mm				
					A max Height	øD	B (G2")	B (3/4" BSP)	C
IHV 10-120	10.3	110	-20/100	48	405	226	103	-	66
							-	68	
IHV 12-110	13.1	110	-20/100	59	504	226	103	-	66
							-	68	
IHV 20-122	19.7	110	-20/100	82	714	226	103	-	66
							-	68	
IHV 24,5-110	23.9	110	-20/100	90	862	226	103	-	66
							-	68	
IHV 32-129	36.1	110	-20/100	123	1233	226	103	-	66
							-	68	
IHV 50-122	52.2	110	-20/100	157	1752	226	103	-	66
							-	68	

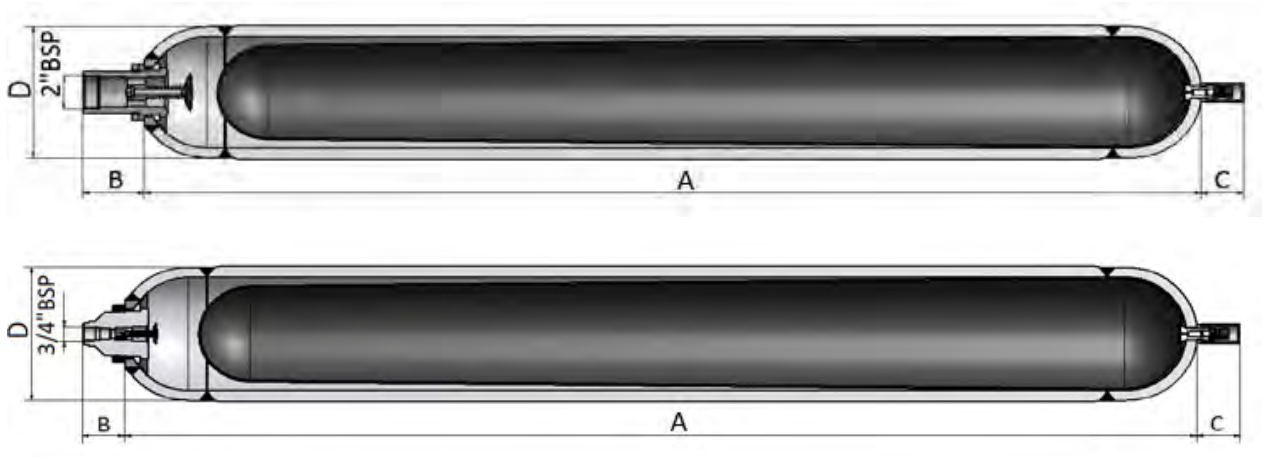

IHV Series 110 bar, 10 to 50 Litres

Standard version (**Stainless Steel** shell/compatible with mineral oils) (2).

According to ASME VIII Division I U STAMPED

Product Prices, Part numbers, Accessories, Dimensions

Type	Part Number	Adaptor	Flange	Clamps	Support Bracket	Complete Repair Kit
				Model (quantity) Part number	Model Part number	Model Part number
IHV 10-110	JS301011052CXR25 JS30101105CCXR25	Various adaptors and flanges available Consult Division		D226 (2) 20251503648	CE159A 20109003620	8590018-xxyy 8590019-xxyy
IHV 12-110	JS301211052CXR25 JS30121105CCXR25			D226 (2) 20251503648	CE159A 20109003620	8590020-xxyy 8590021-xxyy
IHV 20-110	JS302011052CXR25 JS30201105CCXR25			D226 (2) 20251503648	CE159A 20109003620	8590022-xxyy 8590023-xxyy
IHV 24,5-110	JS302411052CXR25 JS30241105CCXR25			D226 (2) 20251503648	CE159A 20109003620	8590024-xxyy 8590025-xxyy
IHV 32-110	JS303211052CXR25 JS30321105CCXR25			D226 (2) 20251503648	CE159A 20109003620	8590026-xxyy 8590027-xxyy
IHV 50-110	JS305011052CXR25 JS30501105CCXR25			D226 (2) 20251503648	CE159A 20109003620	8590028-xxyy 8590029-xxyy

Available in PED 2014/68/EU (EHV version)

Possibility in carbon steel material, Duplex and Superduplex

(2) For other fluids consult Parker

Type	Effective Gas vol. Litres	Max. Working pressure (PS) bar	Admissible Accumulator Temperature min/max (°C)	Weight kg	Dimensions in mm				
					A max Height	øD	B (G2")	B (3/4" BSP)	C
IHV 10-110	10.3	110	-20/100	46	400	226	103	-	66
							-	68	
IHV 12-110	13.1	110	-20/100	58	498	226	103	-	66
							-	68	
IHV 20-110	19.7	110	-20/100	70	708	226	103	-	66
							-	68	
IHV 24,5-110	23.9	110	-20/100	80	856	226	103	-	66
							-	68	
IHV 32-110	36.1	110	-20/100	105	1227	226	103	-	66
							-	68	
IHV 50-110	52.2	110	-20/100	138	1754	226	103	-	66
							-	68	

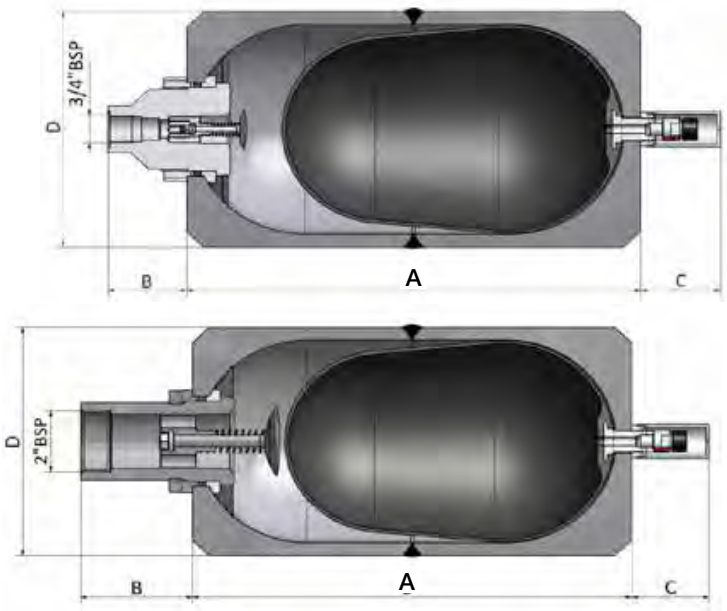

EHV Series 120 bar, 1 to 5 Litres

Standard version (Stainless Steel shell/NBR mix) compatible with mineral oils (2).
According to PED 2014/68/EU, AD 2000, Fluid Group 2 (3).

Product Prices, Part numbers, Accessories, Dimensions

Type Part number	**Pre-charge**		**Adaptor****	**Clamps**	**Support Bracket**	**Complete Repair Kit**
	1 - 109 bar	**110 - 209 bar**	Threaded Part number	Part number	Model Part number	Model Part number
EHV 1-120/00-I25DC-200* 10953701925	751001	751030	G ¾" cyl 04555201723	10981	CE 89 20151901220	KIT 1-120/00-I25DC 19039501725
EHV 2.5-120/90-I25DC-200 10953401925	751002	751031	G ¾" cyl 04555201723	10981	CE 89 20151901220	KIT 2.5-120/90-I25DC 19029801725
EHV 5-120/90-I25DC-200 10953501925	751003	751032	G ¾" cyl 04555201723	10981	CE 89 20151901220	KIT EHV 5-120/90-I25DC 19030001725

(2) For other fluids consult Parker

(3) For Fluid group 1 consideration : consult Parker

* According to Article 4.3 PED 2014/68/EU

** For more adaptor options see pages 74&75.

Model of valve stem
integrated
7/8"14 UNF
(C)



Type	Effective Gas vol. Litres	Max. Working pressure (PS) bar	Max Flow Rate l/min	Admissible Accumulator Temperature min/max (°C) (1)	Weight kg	Gas connection	Dimensions in mm							
							A max Height	B	C	øD	ød	øE	F on flats	G connection
EHV 1-120/00-I25DC-200*	1	120	450	- 20/80	6	7/8" 14 UNF	345	67	66	116	22.5	68	50	G 11/4"
EHV 2.5-120/90-I25DC-200 EHV 5-120/90	2.4 5	120 120	450 450	- 20/80	11 17	7/8" 14 UNF	542 891	67	66	116	22.5	68	50	G 11/4"
EHV 5-120/90-I25DC-200	5	120	450	- 20/80	17	7/8" 14 UNF	891	67	66	116	22.5	68	50	G 11/4"

(1)Temperature range can change depending on shell and elastomer material. Please see bladder materials and Type (page 87)

Above dimensions are in mm and are subject to manufacturing tolerances.

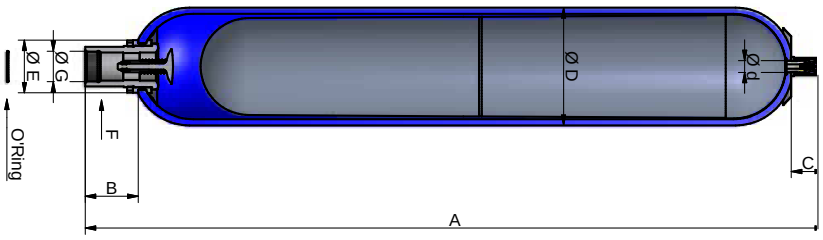

Adaptors EHV Carbon Steel

Accumulator model	Connection ØF gas cylinder	Connection ØI gas cylinder	P/N	Shape	J/Flats	K	O-Ring / Back-up ring
EHV 0,2 Litre 350 bar	G 1/2"	G 1/4"	04556500223	A	27	8	O-ring 18x2
		Blind	04501800223	A	27	8	O-ring 18x2
EHV 0,5 & 1 & 1,6 Litres 350 bar	G 3/4"	G 3/8"	04556400223	A	32	8	O-ring 21,3x2,4
			04556100223	B	32	8	O-ring 16,9x2,7
		Blind	04502000223	A	32	8	O-ring 21,3x2,4
			04558200223	B	32	8	O-ring 16,9x2,7
EHV 1 to 5 Litres 690 bar	G1"	G 1/2"	04579500223	B	41	10	O-ring 21,3x3,6 / BUR 22x28x0,69*2
		Blind	04579600223	B	41	10	O-ring 21,3x3,6 / BUR 22x28x0,69*2
EHV 2,5 to 10 Litres 350 bar	G1"1/4	G 1/2"	04555100233	A	50	10	O-ring 36,2x3
			04555800233	B	50	10	O-ring 30x3
		G 3/4"	04555200223	A	50	10	O-ring 36,2x3
			04555900223	B	50	10	O-ring 30x3
		G 1"	04583100223	A	50	40	O-ring 36,2x3
		Blind	04502200223	A	50	10	O-ring 36,2x3
			04558300233	B	50	10	O-ring 30x3
EHV 10 to 57 Litres 330 bar	G2"	G 1/2"	04556800223	A	65	13	O-ring 54x3
			04557700223	B	65	13	O-ring 48x3
		G 3/4"	04556900223	A	65	13	O-ring 54x3
			04557800223	B	65	13	O-ring 48x3
		G 1"	04557000223	A	65	13	O-ring 54x3
			04557900233	B	65	13	O-ring 48x3
		G 1"1/4	04557100223	A	65	13	O-ring 54x3
			04558000223	B	65	13	O-ring 48x3
		Blind	04502400223	A	65	13	O-ring 54x3
			04558400223	B	65	13	O-ring 48x3
EHV 10 to 50 Litres 480 bar	G2"	G 1/2"	04556802523	A	65	13	O-ring 54x3
			04557702523	B	65	13	O-ring 48x3
		G 3/4"	04556902523	A	65	13	O-ring 54x3
			04557802523	B	65	13	O-ring 48x3
		G 1"	04557002523	A	65	13	O-ring 54x3
			04557902523	B	65	13	O-ring 48x3
		G 1"1/4	04557102523	A	65	13	O-ring 54x3
			04558002523	B	65	13	O-ring 48x3
		Blind	04502402523	A	65	13	O-ring 54x3
			04558402523	B	65	13	O-ring 48x3
EHV 12 to 54 Litres 690 bar	G2"	G 1"	04579002523	B	65	15	O-ring 43,82x5,33 / BUR 45x54x0,85*2
		Blind	04579202523	B	65	15	O-ring 43,82x5,33 / BUR 45x54x0,85*2

Shape A - Seal in angle

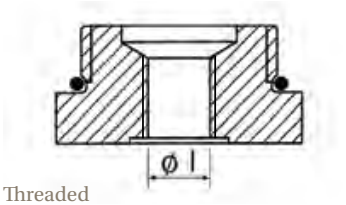

Threaded

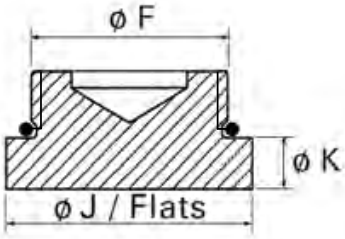

Blind

Shape B - Seal in fluid port

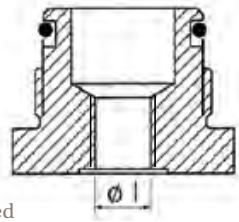

Threaded

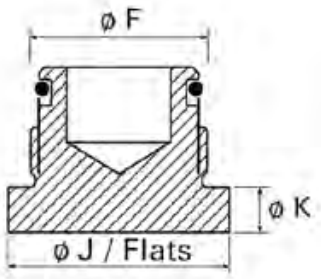

Blind

Flanges EHVF Carbon Steel

Accumulator model	Type	Part Number	A	B	C	D	F	øG	ØH	L	M
EHVF 2,5 to 10 Litres	**FLANGE KIT BR 400-25**	35132600123	81	70	24	27.8	57.2	32.92	3.53	45	M12
EHVF 10 to 57 Litres	**FLANGE KIT BR 400-38**	35132400123	113	95	30	36.5	79.3	47.22	3.53	55	M16

According ISO 6162-2

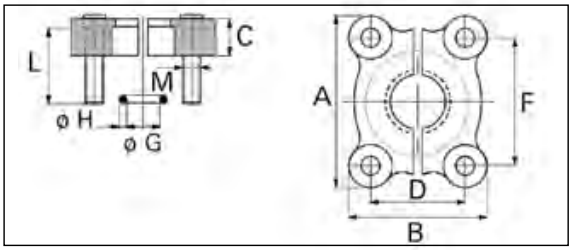

Due to our vast experience in demanding markets such as aerospace, military, nuclear, renewable energies and formula one racing, we are offering an unmatchable range of rubber compounds to meet the most difficult applications.

Parker Olaer products are supported all over the globe, and we will meet customer requirements wherever needed. We therefore offer the complete range of approvals, such as all key Marine approvals (BV, DNV, ABS, LR, ...), over and above all country specific approvals (PED, ASME, SELO, CRN, ARH, CUTR, ...).

hymatik





aerospace
climate control
electromechanical
filtration
fluid & gas handling
hydraulics
pneumatics
process control
sealing & shielding





DNV·GL

ABS

RCC-M

MARINE DIVISION
BUREAU VERITAS

Accumulator Regulations & Protections

EBV and EHV Series



Parker HANNIFIN

OLAER

ENGINEERING YOUR SUCCESS.

Tel: +45 63 12 83 00 | Email: ps@hymatik.com | www.hymatik.com | Hvidkaervej 27a, DK-5250 Odense SV, Denmark

Additional Regulations

Due to our vast experience in demanding markets such as aerospace, military, nuclear, renewable energies and formula one racing, we are offering an unmatchable range of rubber compounds to meet the most difficult applications.

Parker Olaer products are supported all over the globe, and we will meet customer requirements wherever needed. We therefore offer the complete range of approvals, such as all key Marine approvals (BV, DNV, ABS, LR, ...), over and above all country specific approvals (PED, ASME, SELO, CRN, ARH, CUTR, ...).

Destination	Regulation	Regulation code		Comments
EUROPE	**PED**	**90**		Approval is based on the directive PED 2014/68/EU requirements. The CE marking will be apposed on the product for Pressure Vessel category >= I. Notified body must be engaged for PED conformity assessment for pressure vessel category >= II.
	PED	**00**		Product is compliance with directive PED 2014/68/EU and classified as art 4.3 (Sound Engineering Practice). No CE marking is stamped on product.
USA	**ASME**	**15 or 48**	**Base ASME VIII div 1 with or without appendix 22**	This regulation is based on the design code ASME VIII div 1 with or without appendix 22. Appendix 22 is only applicable for forged shells (under some conditions). To be conform to this regulation, products must be followed all the rules defined in this code. The U-stamp apposed on pressure equipment attest ASME compliance.
CHINA	**SELO**	**88**	**Base PED**	SELO regulation is only applicable for pressure vessels where : maximum working pressure ≥ 0.1 Mpa internal volume ≥ 30L and inner diameter ≥ 150 mm Refer to "AQSIQ Announcement No. 114, 2014 on the Revision of Special Equipment Catalogue", code 2000 for pressure vessel definition.
CANADA	**CRN**	**92**	**>= 152,4 mm, Based on ASME**	Approval is based on ASME VIII div 1 design code. Others countries as example Alaska require a CRN registration. Also, each province and territory of Canada has its own CRN rules, so, please indicate the concerned province for quotation.
	CRN		**< 152,4 mm, based on PED**	Pressure equipment, where internal diameter < 6 inch, could be registered as fitting under CRN consideration.
AUSTRALIA	**AS1210**	**83 or 91**	**Base PED or ASME**	Australian regulation is applicable for pressure vessels which maximum working pressure (MPa) X volume (internal volume in L) is higher than 30 MpaL in size.
JAPAN	**JIS**	**95**		Approval is based on ASME VIII div 1 design code (version 1998) and taking into account specific corrosion allowance value. JIS is applicable only for pressure vessels which internal diameter is higher than six inches (152,4 mm).
BRASIL	**NR13**	**AA AM AE**	**Base PED Based on Art 4.3 acc. To PED Based on ASME VIII div 1**	NR13 regulation is only applicable for pressure vessels which maximum working pressure in KPa x V (internal volume in m3) is higher than 8.Also, technical documentation packaging must be established and joined to the equipment. Special marking has to be done on the pressure vessel according to NR13 requirements.
RUSSIA, KAZAKHSTAN BELARUS	**CUTR 032/2013**	**71**	**Based on PED**	CUTR DoC or CoC must be established and joined to the equipment for delivery depending on risk category for pressure vessel. Technical passport could be established if customer requires it. Special nameplate (@ minima English and Russian languages) must be put on the pressure equipment to be compliance with this certification.
MARINE - OFFSHORE	**DNV GL Det Norske Veritas and Germanischer Lloyd's**	**24, 43**	**Based on PED and design code EN 14359**	Off-shore Standard DNVGL OS-D101 is often required for accumulators on off-shore oil and gas applications, particularly in the North Sea. EHV accumulators are also certified DNV GL through Type Approval based on "EN 14359" standard. Through final inspection conducting by surveyor, a product certificate is delivered with the accumulator.
	BV BUREAU VERITAS MARINE	**11, 13**	**Based on PED and design code EN 14359**	BV Rules for the classification of Steel Ships NR 467 is often required for accumulators on offshore applications. Also, EHV accumulators are certified BV Marine through Type Approval based on "EN 14359" standard. A product certificate is delivered with the accumulator.
	ABS AMERICAN BUREAU OF SHIPPING	**41, 23**	**Based on PED and design code EN 14359**	ABS certification is required for accumulators installed on shipping vessels and oil rigs. To be added to a Product Design Assessment Certificate (PDA), accumulators must meet generally ABS steel vessel rules. Also, EHV accumulators are ABS certified based on "EN 14359" standard. All ABS approved accumulators must be witness tested at Parker by an ABS inspector

For these specific regulations (and/or) if your destination is not mentioned in this table, please contact Parker for more information

Tel: +45 63 12 83 00 | Email: ps@hymatik.com | www.hymatik.com | Hvidkaervej 27a, DK-5250 Odense SV, Denmark

Destination	Regulation	Regulation code		Comments
MARINE - OFFSHORE	CCS Chinese Classification Society	BM	Based on PED and design code EN 14359	To check in details if the scope of this marine approval is compatible with your application, please contact PARKER for feasibility.
	LROS LLOYDS REGISTER OF SHIPPING	10		
	RINA	26		
France	NUCLEAR	90	Classified as NPE (Nuclear Pressure Equipment)	Approval is based on RCCM design code and dedicated only to France market. For other countries out of France, ASME III div 1 is more recognized for nuclear plant activities.
	NUCLEAR	BN	Non-Classified as NPE (Nuclear Pressure Equipment)	
EUROPE & USA	NUCLEAR	AZ	Based on ASME III div 1	Approval is based on ASME III division 1 (mainly on subsection NC for components class 2) for pressure equipment designated to countries other than France.

How to include the right regulation in your order ?

Multi-approval codification examples*

Code	Regulations
90 EX	PED + ATEX
94	PED + ASME
88	PED + SELO
86	PED + ASME + SELO

Accumulator denomination example :

EHV 32-330 / xx

For other regulations, please contact PARKER

Regulations by Country

		PARKER	
Country	**Regulation or Multi-approval**	**Code[1]**	**General Information**
Algeria	ARH	74	Hydrocarbon Regulatory Authority Based on CE or ASME Approval ARH dossier must be established and approved by the competent authorities
Argentina	CE	90	From July 19th, 2016 : PED 2014/68/EU Fluid Group 1 (and/or 2)
Australia	AS1210	83 91	CE + AS 1210 ASME VIII Div.1 App.22 + AS 1210
Austria	CE	90	From July 19th, 2016 : PED 2014/68/EU Fluid Group 1 (and/or 2)
Bahamas	CE OR ASME VIII Div 1	90 94 48 51	CE : From July 19th, 2016 : PED 2014/68/EU CE + ASME VIII Div.1 App.22, only applicable for forged shells ASME VIII Div.1 App.22, only applicable for forged shells ASME VIII Div.1, more dedicated to welded shells
Barbados	CE	90	From July 19th, 2016 : PED 2014/68/EU Fluid Group 1 (and/or 2)
Belarus	CUTR 032/2013 + technical passport	71	CUTR 032/2013 regulation applicable for Custom Union countries Russia, Kazakhstan, Belorussia – See PARKER ITALY
Belgium	CE	90	From July 19th, 2016 : PED 2014/68/EU Fluid Group 1 (and/or 2)
Bermuda	CE OR ASME VIII Div 1	90 94 48 51	CE : From July 19th, 2016 : PED 2014/68/EU CE + ASME VIII Div.1 App.22, only applicable for forged shells ASME VIII Div.1 App.22, only applicable for forged shells ASME VIII Div.1, more dedicated to welded shells
Bolivia	CE	90	From July 19th, 2016 : PED 2014/68/EU Fluid Group 1 (and/or 2)
Brazil	CE+NR13 CE+ASME+NR13	AA AB	Brazilian Regulation, based on CE or ASME approval, Technical dossier must be established, special marking and nameplate acc.to NR13 regulation
Bulgaria	CE	90	From July 19th, 2016 : PED 2014/68/EU Fluid Group 1 (and/or 2)
Canada	CRN (base ASME)	31 92 97	ASME VIII Div.1 + CRN (all provinces) ASME VIII Div.1 App.22 + CRN (all provinces), only applicable for forged shells CE + ASME VIII div. 1 App 22 + SELO + CRN (all provinces), only applicable for forged shells
Chile	CE	90	From July 19th, 2016 : PED 2014/68/EU Fluid Group 1 (and/or 2)
China	CE	90	PED 2014/68/EU for pressure vessels where volume <= 30L or internal Ø <= 150mm
	SELO	85 88 86	SELO only : Chinese regulation, SELO applicable if volume > 30L and internal Ø > 150mm CE + SELO CE + SELO + ASME VIII DIV.1 App.22, only applicable for forged shells
Costa Rica	CE	90	From July 19th, 2016 : PED 2014/68/EU Fluid Group 1 (and/or 2)
Cyprus	CE	90	From July 19th, 2016 : PED 2014/68/EU Fluid Group 1 (and/or 2)
Czech Republic	CE + Technical passport	90	From July 19th, 2016 : PED 2014/68/EU Fluid Group 1 (and/or 2)
Denmark	CE	90	From July 19th, 2016 : PED 2014/68/EU Fluid Group 1 (and/or 2)
Ecuador	CE	90	From July 19th, 2016 : PED 2014/68/EU Fluid Group 1 (and/or 2)
Egypt	CE	90	From July 19th, 2016 : PED 2014/68/EU Fluid Group 1 (and/or 2)
Estonia	CE	90	From July 19th, 2016 : PED 2014/68/EU Fluid Group 1 (and/or 2)
Finland	CE	90	From July 19th, 2016 : PED 2014/68/EU Fluid Group 1 (and/or 2)
France	CE	90	From July 19th, 2016 : PED 2014/68/EU Fluid Group 1 (and/or 2)
Germany	CE	90	From July 19th, 2016 : PED 2014/68/EU Fluid Group 1 (and/or 2)
Hong Kong	SELO	85 88 86	SELO only : Chinese regulation, SELO applicable if volume > 30L and internal Ø > 150mm CE + SELO CE + SELO + ASME VIII DIV.1 App.22, only applicable for forged shells
Hungary	CE	90	From July 19th, 2016 : PED 2014/68/EU Fluid Group 1 (and/or 2)
Iceland	CE	90	From July 19th, 2016 : PED 2014/68/EU Fluid Group 1 (and/or 2)
India	CE OR ASME VIII Div 1 (no U-stamp)	90 94 48 51	CE : From July 19th, 2016 : PED 2014/68/EU CE + ASME VIII Div.1 App.22, only applicable for forged shells ASME VIII Div.1 App.22, only applicable for forged shells ASME VIII Div.1, more dedicated to welded shells
Indonesia	No specific regulation	90 94 48 51	CE : From July 19th, 2016 : PED 2014/68/EU CE + ASME VIII Div.1 App.22, only applicable for forged shells ASME VIII Div.1 App.22, only applicable for forged shells ASME VIII Div.1, more dedicated to welded shells
Iraq	CE	90	From July 19th, 2016 : PED 2014/68/EU Fluid Group 1 (and/or 2)
Ireland	CE	90	From July 19th, 2016 : PED 2014/68/EU Fluid Group 1 (and/or 2)
Israel	CE or ASME	90 94	CE : From July 19th, 2016 : PED 2014/68/EU CE + ASME VIII Div.1 App.22, only applicable for forged shells
Italy	CE	90	From July 19th, 2016 : PED 2014/68/EU Fluid Group 1 (and/or 2)
Japan	JIS	95	JIS + ASME VIII DIV.1 App.22 : Japanese industrial regulation (Japanese Industry Standard) + ASME VIII div. 1 applicable if internal Ø > 6", Only applicable for forged shell
Jordan	CE	90	From July 19th, 2016 : PED 2014/68/EU Fluid Group 1 (and/or 2)

Tel: +45 63 12 83 00 | Email: ps@hymatik.com | www.hymatik.com | Hvidkaervej 27a, DK-5250 Odense SV, Denmark

Korea	CE or ASME	90 94 48 51	CE : From July 19th, 2016 : PED 2014/68/EU CE + ASME VIII Div.1 App.22, only applicable for forged shells ASME VIII Div.1 App.22, only applicable for forged shells ASME VIII Div.1, more dedicated to welded shells
Kuwait	CE	90	From July 19th, 2016 : PED 2014/68/EU Fluid Group 1 (and/or 2)
Latvia	CE	90	From July 19th, 2016 : PED 2014/68/EU Fluid Group 1 (and/or 2)
Lebanon	CE	90	From July 19th, 2016 : PED 2014/68/EU Fluid Group 1 (and/or 2)
Libya	CE	90	From July 19th, 2016 : PED 2014/68/EU Fluid Group 1 (and/or 2)
Lithuania	CE	90	From July 19th, 2016 : PED 2014/68/EU Fluid Group 1 (and/or 2)
Luxembourg	CE	90	From July 19th, 2016 : PED 2014/68/EU Fluid Group 1 (and/or 2)
Malaysia	DOSH Malaysia	AV BB BJ	ASME VIII Div.1 App 22 + DOSH, only applicable for forged shells CE + DOSH CE + ASME VIII Div.1 App.22 + DOSH, only applicable for forged shells
Malta	CE	90	From July 19th, 2016 : PED 2014/68/EU Fluid Group 1 (and/or 2)
Mexico	CE	90	From July 19th, 2016 : PED 2014/68/EU Fluid Group 1 (and/or 2)
Netherlands	CE	90	From July 19th, 2016 : PED 2014/68/EU Fluid Group 1 (and/or 2)
New Zealand	AS1210	83 91	CE + AS 1210 ASME VIII Div.1 App.22 + AS 1210
Nigeria	CE	90	From July 19th, 2016 : PED 2014/68/EU Fluid Group 1 (and/or 2)
Norway	CE	90	From July 19th, 2016 : PED 2014/68/EU Fluid Group 1 (and/or 2)
Pakistan	CE	90	From July 19th, 2016 : PED 2014/68/EU Fluid Group 1 (and/or 2)
Peru	CE	90	From July 19th, 2016 : PED 2014/68/EU Fluid Group 1 (and/or 2)
Philippines	CE or ASME	90 94 48 51	CE : From July 19th, 2016 : PED 2014/68/EU CE + ASME VIII Div.1 App.22, only applicable for forged shells ASME VIII Div.1 App.22, only applicable for forged shells ASME VIII Div.1, more dedicated to welded shells
Poland	CE	90	From July 19th, 2016 : PED 2014/68/EU Fluid Group 1 (and/or 2)
Portugal	CE	90	From July 19th, 2016 : PED 2014/68/EU Fluid Group 1 (and/or 2)
Puerto Rico	CE or ASME	90 94 48 51	CE : From July 19th, 2016 : PED 2014/68/EU CE + ASME VIII Div.1 App.22, only applicable for forged shells ASME VIII Div.1 App.22, only applicable for forged shells ASME VIII Div.1, more dedicated to welded shells
Romania	CE	90	From July 19th, 2016 : PED 2014/68/EU Fluid Group 1 (and/or 2)

Russia	CUTR 032/2013 + technical passport	71	CUTR 032/2013 regulation applicable for Custom Union countries Russia, Kazakhstan, Belorussia – See PARKER ITALY
Saudi Arabia	CE	90	From July 19th, 2016 : PED 2014/68/EU Fluid Group 1 (and/or 2)
Singapore	CE or ASME	90 94 48 51	CE : From July 19th, 2016 : PED 2014/68/EU CE + ASME VIII Div.1 App.22, only applicable for forged shells ASME VIII Div.1 App.22, only applicable for forged shells ASME VIII Div.1, more dedicated to welded shells
Slovakia	CE + Technical passport	90	From July 19th, 2016 : PED 2014/68/EU Fluid Group 1 (and/or 2)
Slovenia	CE	90	From July 19th, 2016 : PED 2014/68/EU Fluid Group 1 (and/or 2)
South Africa	CE	90	From July 19th, 2016 : PED 2014/68/EU Fluid Group 1 (and/or 2)
Spain	CE	90	From July 19th, 2016 : PED 2014/68/EU Fluid Group 1 (and/or 2)
Sweden	CE	90	From July 19th, 2016 : PED 2014/68/EU Fluid Group 1 (and/or 2)
Switzerland	CE	90	From July 19th, 2016 : PED 2014/68/EU Fluid Group 1 (and/or 2)
Taiwan	CE	90	From July 19th, 2016 : PED 2014/68/EU Fluid Group 1 (and/or 2)
Thailand	CE or ASME	90 94 48 51	CE : From july 19th, 2016 : PED 2014/68/EU CE + ASME VIII Div.1 App.22, only applicable for forged shells ASME VIII Div.1 App.22, only applicable for forged shells ASME VIII Div.1, more dedicated to welded shells
Tunisia	CE	90	From July 19th, 2016 : PED 2014/68/EU Fluid Group 1 (and/or 2)
Turkey	CE	90	From July 19th, 2016 : PED 2014/68/EU Fluid Group 1 (and/or 2)
United Kingdom	CE, Pressure Systems Safety Regulations (PSSR)	90	From July 19th, 2016 : PED 2014/68/EU Fluid Group 1 (and/or 2)
USA	CE if internal Ø < 6” ASME VIII Div 1 (U-stamp) if internal Ø > 6”	90 94 48 51	CE : From July 19th, 2016 : PED 2014/68/EU CE + ASME VIII Div.1 App.22, only applicable for forged shells ASME VIII Div.1 App.22, only applicable for forged shells ASME VIII Div.1, more dedicated to welded shells
Venezuela	CE	90	From July 19th, 2016 : PED 2014/68/EU Fluid Group 1 (and/or 2)
Yugoslavia (Serbia Montenegro)	CE	90	From July 19th, 2016 : PED 2014/68/EU Fluid Group 1 (and/or 2)

Tel: +45 63 12 83 00 | Email: ps@hymatik.com | www.hymatik.com | Hvidkaervej 27a, DK-5250 Odense SV, Denmark

Regulations for EBV Bladder Accumulators
Carbon Steel & Stainless Steel

Destination	EUROPE				USA		CHINA		CANADA		AUSTRALIA			
Regulation codification	/90 /00	/90 /00	/90 EX		/15 /48		/85		/92			/83	/91	
Models	PED FLUID GROUP 2	PED FLUID GROUP 1	ATEX	Maximum Working Pressure (Bar)	ASME VIII div. 1	Maximum Working Pressure (Psi)	SELO	Maximum Working Pressure (Bar)	CRN	Maximum Working Pressure (Psi)	AS1210	Maximum Working Pressure (Bar)	Maximum Working Pressure Psi	
EBV 0,5L	●	●	●	50			N/A							
EBV 0,5L	●	●	●	40			N/A							
EBV 1 to 5L	●	●	●	80			N/A							
EBV 1 to 5L	●	●	●	40			N/A							
EBV 10 to 20L	●	●	○	40			N/A							
EBV 10 to 20L	●	●	●	40	●	580 (40 Bar)	N/A							
EBV 10 to 50L	●	○	○	14 or 20	●	290 (20 Bar)	○		●	(2) 290 (20 Bar)	●		(3) 290 (20 Bar)	
EBV 32 to 50L	●	●	○	40			●	40						
EBV 32 to 50L	●	●	●	40	●	580 (40 Bar)	●	40						
EBV 100 to 200L	●	●	○	40			●	40						
EBV 100 to 200L	●	●	●	20	●	290 (20 Bar)	●	20						
EBV 100 to 200L	●	●	○	50			●	50						
EBV 100 to 200L	●	○	○	14 or 20	●	290 (20 Bar)	○		●	(2) 290 (20 Bar)	●		(3) 290 (20Bar)	
EBV 100 to 575L	●	●	●	20	●	290 (20 Bar)	●	20						
EBV 100 to 575L	●	●	●	8	●	290 (20 Bar)	●	8						
EBV 100 to 575L	●	●	●	16			●	16						
EBV 100 to 575L	●	●	●	20			●	20						
EBV 100 to 575L	●	●	●	40			●	40						
EBV 100 to 575L	●	○	○	14 or 18	●	261 (18 Bar)	○		●	(2) 261(18 Bar)	●		(3) 261 (18 Bar)	
EBV 100 to 575L	●	○	○	35	●	507 (35 Bar)	○		●	(2) 507 (35 Bar)	●		(3) 507 (35 Bar)	

(1) Pressure rating different from PED, based on ASME material, possibility of U-STAMP

(2) Based on ASME Certification, whatever Province CRN could be obtained

(3) Based on ASME Certification, whatever Design Verification could be obtained

● **Available**

○ **Available on request**

	BRAZIL			RUSSIA, KAZAKHSTAN, BELARUS			MARINE - OFFSHORE							
		/AE	/AA		/71	/AU	/43 /24		/13 /11		/23 /41		/ 24	
	NR13	Maximum Working Pressure (Bar)	Maximum Working Pressure (Bar)	CUTR 032/2013	Maximum Working Pressure (Bar)	Maximum Working Pressure Psi	DNV MOBILE SHIPS	Maximum Working Pressure (Bar)	BUREAU VERITAS MARINE	Maximum Working Pressure (Bar)	ABS AMERICAN BUREAU OF SHIPPING	Maximum Working Pressure (Bar)	GL GERMANISCHER LLOYD'S	Maximum Working Pressure (Bar)
							○		○		○		○	
							○		○		○		○	
	●		80	●	80		○		○		○		○	
				●	40		○		○		○		○	
	●		40	●	40		○		○		○		○	
	●		40	●	40	580 (40 Bar)	○		○		○		○	
				●	20	290 (20 Bar)								
	●		40	●	40		○		○		○		○	
	●		40	●	40	580 (40 Bar)	○		○		○		○	
	●		40	●	40		○		○		○		○	
	●		20	●	20	290 (20 Bar)	○		○		○		○	
	●		50	●	50		○		○		○		○	
				●	20	290 (20 Bar)								
	●		20	●	20	290 (20 Bar)	○		○		○		○	
	●		8	●	8	290 (20 Bar)	○		○		○		○	
	●		16	●	16		○		○		○		○	
	●		20	●	20		○		○		○		○	
	●		40	●	40		○		○		○		○	
				●	18	261 (18 Bar)								
				●	35	507 (35 Bar)								

Regulations for EHV Bladder Accumulators

Destination	EUROPE				USA		CHINA		CANADA		AUSTRALIA			
Regulation codification	/90 /00	/90 /00	/90 EX		/15 /48		/85		/92			/83	/91	
Models	PED FLUID GROUP 2	PED FLUID GROUP 1	ATEX	Maximum Working Pressure (Bar)	ASME VIII div. 1	Maximum Working Pressure Psi	SELO	Maximum Working Pressure (Bar)	CRN	Maximum Working Pressure Psi	AS1210	Maximum Working Pressure (Bar)	Maximum Working Pressure Psi (Bar)	
EHV (special) 5L	●	○	○	330	○		○		○		○			
EHV 0,2L	●	●	●	350	N/A									
EHV 0,5L	●	●	●	350	N/A		N/A		○		○			
EHV 1 to 5L	●	●	●	350	N/A		N/A		○		●	350		
EHV 1 to 5L	○	●	●	690	N/A		N/A		○		○			
EHV 1 to 5L	●	●	●	300	N/A		N/A		○		○			
EHV 1 to 5L	●	●	●	120	○		N/A		○		○			
EHV 10 to 50 L	●	○	○	110	●	1595 (110 Bar)	○		○	(2) 1595 (110 Bar)	○		(3) 1595 (110 Bar)	
EHV 10 to 50 L Short	●	○	○	110	●	1595 (110 Bar)	○		○	(2) 1595 (110 Bar)	○		(3) 1595 (110 Bar)	
EHV 10 to 24.5L	○	●	○	300	●	3000 (207 Bar)	N/A		●	3000 (207 Bar)	○			
EHV 10 to 24.5L	●	●	○	330	●	3600 (248 Bar)	N/A		●	3600 (248 Bar)	●		3600 (248 Bar)	
EHV 10 to 24.5L	○	●	○	380	●	4000 (276 Bar)	N/A		●	4000 (276 Bar)	●		4000 (276 Bar)	
EHV 10 to 24.5L	●	●	●	690	○		N/A		○		○			
EHV 10 to 50 L	●	○	○	70	●	1015 (70 Bar)	○		○	(2) 1015 (70 Bar)	○		(3) 1015 (70 Bar)	
EHV 10 to 57L	●	●	●	480	○		●	480	○		●	400		
EHV 10 to 57L	●	○	●	480	○		●	480	○		○			
EHV 100 to 200L	●	●	○	300	○		●	300	○		○			
EHV 12 to 54L	○	●	●	690			●	690	○					
EHV 32 to 50L	●	●	●	690	○		●	690	○		○			
EHV 32 to 57L	○	●	○	300	●	3000 (207 Bar)	●	300	●	3000 (207 Bar)	○			
EHV 32 to 57L	●	●	○	330	●	3600 (248 Bar)	●	330	●	3600 (248 Bar)	●		3600 (248 Bar)	
EHV 32 to 57L	○	●	○	380	●	4000 (276 Bar)	●	380	●	4000 (276 Bar)	●		4000 (276 Bar)	
EHV 4 to 60L	○	○	○		●	5000 (345 bar)	○		○		○			
EHV 4 to 60L	○	○	○		●	6000 (413 Bar)	○		○		○			
EHV 4L-6L-10L	●	●	●	350	●	4000 (276 Bar)	N/A		○		●	320		
EHV 4L-6L-10L	●	●	●	210	○		N/A		○		○			
EHVDA 10 to 24,5L	●	●	●	330	●	3600 (248 Bar)	N/A		●	3600 (248 Bar)	●		3600 (248 Bar)	
EHVDA 2,5 to 5L	●	●	●	350	N/A		N/A		○		○			
EHVDA 32 to 57L	●	●	●	330	●	3600 (248 Bar)	●	330	●	3600 (248 Bar)	●		3600 (248 Bar)	
EHVDA 4L-6L-10L	●	●	●	350	●	4000 (276 Bar)	N/A		○		○			
EHVF 10 to 24.5L	●	●	○	330	○		N/A		○		○			
EHVF 2,5 to 10L	●	●	○	350	○		N/A		○		○			
EHVF 32 to 50L	●	●	○	330	○		●	330	○		○			

(1) Pressure rating different from PED, based on ASME material, possibility of U-STAMP

(2) Based on ASME Certification, whatever Province CRN could be obtained

(3) Based on ASME Certification, whatever Design Verification could be obtained

● Available

○ Available on request

Tel: +45 63 12 83 00 | Email: ps@hymatik.com | www.hymatik.com | Hvidkaervej 27a, DK-5250 Odense SV, Denmark

Carbon Steel & Stainless Steel

	BRAZIL			RUSSIA, KAZAKHSTAN, BELARUS			MARINE - OFFSHORE								France	
		/AE	/AA		/71	/AU	/43 /24		/13 /11		/23 /41		/ 24			
	NR13	Maximum Working Pressure (Bar)	Maximum Working Pressure (Bar)	CUTR 032/2013	Maximum Working Pressure (Bar)	Maximum Working Pressure Psi	DNV MOBILE SHIPS	Maximum Working Pressure (Bar)	BUREAU VERITAS MARINE	Maximum Working Pressure (Bar)	ABS AMERICAN BUREAU OF SHIPPING	Maximum Working Pressure (Bar)	GL GERMANISCHER LLOYD'S	Maximum Working Pressure (Bar)	NUCLEAR	Maximum Working Pressure (Bar)
	○			○											●	330
	●		350				●	350		350	●	350	●	350		
	●		350	●	350		●	350	●	350	●	350	●	350		
	●		690	●	690		○		○		○		○			
	●		300	●	300		○		○		○		○			
	●		120	●	120		○		○		○		○			
				●	110	1595 (110 Bar)										
				●	110	1595 (110 Bar)										
	●	3000 (207 Bar)	300	●	300	3000 (207 Bar)	○		○		○		○			
	●	3600 (248 Bar)	330	●	330	3600 (248 Bar)	●	330	●	330	●	330	●	330		
	●	4000 (276 Bar)	380	●	380	4000 (276 Bar)	○		○		○		○			
	●		690	●	690		○		○		○		○			
				●	70	1015 (70 Bar)										
	●		480	●	480		○		○		○		○			
	●		480	●	480		●	480	○		○		●	480		
	●		300	●	300		○		○		○		○			
	●		690	●	690											
	●		690	●	690		○		○		○		○			
	●	3000 (207 Bar)	300	●	300	3000 (207 Bar)	○		○		○		○			
	●	3600 (248 Bar)	330	●	330	3600 (248 Bar)	●	330	●	330	●	330	●	330		
	●	4000 (276 Bar)	380	●	380	4000 (276 Bar)	○		○		○		○			
	●	5000 (345 bar)		●		5000 (345 bar)	○		○		○		○			
	●	6000 (413 Bar)		●		6000 (413 Bar)	○		○		○		○			
	●	4000 (276 Bar)	350	●	350	4000 (276 Bar)	●	350	●	350	●	350	●	350		
	●		210	●	210		○		○		○		○			
	●	3600 (248 Bar)	330	●	330	3600 (248 Bar)	●	330	●	330	●	330	●	330		
	●		350	●	350											
	●	3600 (248 Bar)	330	●	330	3600 (248 Bar)	●	330	●	330	●	330	●	330		
	●	4000 (276 Bar)	350	●	350	4000 (276 Bar)	●	350	●	350	●	350	●	350		
	●		330	●	330		○		○		○		○			
	●		350	●	350		○		○		○		○			
	●		330	●	330		○		○		○		○			

Tel: +45 63 12 83 00 | Email: ps@hymatik.com | www.hymatik.com | Hvidkaervej 27a, DK-5250 Odense SV, Denmark

Anti-Corrosion Materials

Protections available from Parker

Example : from EHV 4-350/90 PART NUMBER 1084540XX25

Construction code		11 (standard version)	20	50	84	85
Accumulator shell	**Coating**	Primar Coating RAL 5005 External	EPOXY 80 microns Internal	NICKEL PLATING 50 microns Internal/External	RILSAN® 200-300 microns Internal/External	
	Material	Carbon Steel	Carbon Steel	Carbon Steel	Carbon Steel	
Valve Stem, Fluid port, and Protection Cap	**Material**	Standard Steel	Stainless Steel	Stainless Steel (carbon steel for 690 bar accumulators)	Stainless Steel	Standard Steel
Volume						
0.2		x	x	x	x	x
0.5		x	x	x	x	x
1		x	x	x	x	x
1.6		x	x	x	x	x
2.5		x	x	x	x	x
4		x	x	x	x	x
5		x	x	x	x	x
6		x	x	x	x	x
10 (ø 170)		x	x	x	x	x
10 (ø 226)		x	x	x	x	x
12		x	x	x	x	x
20		x	x	x	x	x
24.5		x	x	x	x	x
32		x	x	x	x	x
42		x	x	x	x	x
50		x	x	x	x	x
57		x	x	x	x	x
100		x	x	x	x	x
200		x	x	x	x	x

Depending on your application, fluid and the environment in which you install your systems/equipment, Parker can offer a variety of internal and external shell coatings for your bladder accumulator. Please contact our technical support or your local accumulator expert at Parker if you are uncertain what you may require or for more details on the various coatings.

Bladder Materials and Types

Bladder mixes available from Parker Olaer.

	Standard Bladder	Other mixes										
Mix Number	**Mix 25**	**Mix 02**	**Mix 10**	**Mix 20**	**Mix 30**	**Mix 35**	**Mix 37**	**Mix 40**	**Mix 47**	**Mix 80**	**E2**	**XL**
Mix Name	Standard NBR (Nitrile)	Hydrin C	Low Temp Nitrile	Heavy Duty Nitrile	Low Nitrile Permeability	High Temp Nitrile	External Low Temp Nitrile	Butyl	EPDM	Viton	High performance Nitrile	High performance Nitrile
Max Admissible-Temp °C	100	115	80	100	115	130	110	120	120	140	100	100
Min Admissible Temp °C	-20	-32	-30	-6	-5	0	-59	-15	-40	-20	-15	-10
Volume/Typical Fluid	Mineral Oil	Mineral Oil	Mineral Oil	Mineral Oil	Mineral Oil + Special fuels (not unleaded gasoline)	Mineral Oil	Consult Parker Olaer regarding fluid and application	Water based fluids	Phosphate esters	Aggressive fluids	Mineral Oil	Mineral Oil
0.2	Standard	x	x		x	x	x	x	x	x		
0.5		x	x	x	x	x	x	x	x	x		
1		x	x	x	x	x	x	x	x	x		
1.6		x	x	x	x	x	x	x	x	x		
2.5		x	x	x	x	x	x	x	x	x		x
4		x	x	x	x	x	x	x	x	x		
5		x	x	x	x	x	x	x	x	x		
6		x	x	x	x	x	x	x	x	x		
10 (ø 170)		x	x	x	x	x	x	x	x	x		
10 (ø 226)		x	x	x	x	x	x	x	x	x	x	x
12		x	x	x	x	x	x	x	x	x	x	x
20		x	x	x	x	x	x	x	x	x	x	x
24.5		x	x	x	x	x	x	x	x	x	x	x
32		x	x	x	x	x	x	x	x	x	x	x
42		x	x	x	x	x	x	x	x	x		
50		x	x	x	x	x	x	x	x	x		x
57		x	x	x	x	x	x	x	x	x		
100*		x	x		x	x	x	x	x	x		
200*		x	x		x	x	x	x	x	x		

* Accumulators 100 & 200 Litres Standard Nitrile Mix 20

For the range concerning 100 to 575 L Consult Division.

Notes

Tel: +45 63 12 83 00 | Email: ps@hymatik.com | www.hymatik.com | Hvidkaervej 27a, DK-5250 Odense SV, Denmark





aerospace
climate control
electromechanical
filtration
fluid & gas handling
hydraulics
pneumatics
process control
sealing & shielding



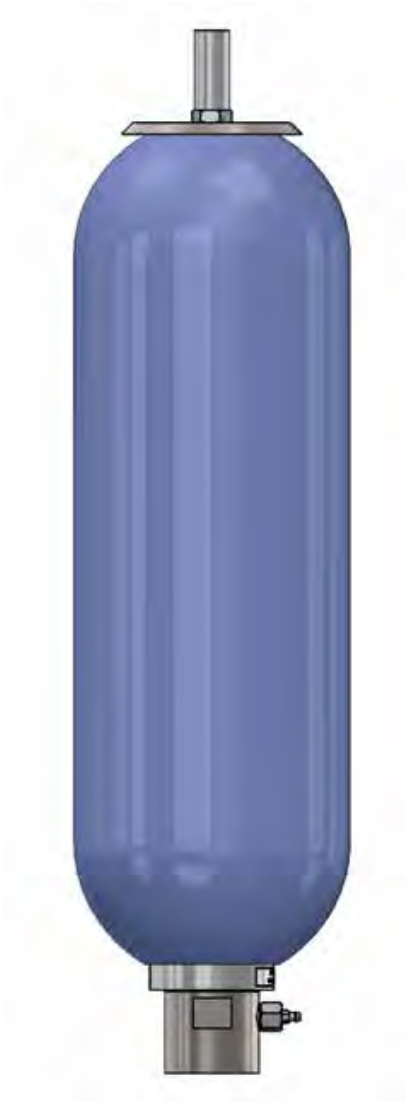

UK Industrial- UK Series Bladder Accumulators

High Pressure, 207 to 420 bar



Parker OLAER

ENGINEERING YOUR SUCCESS.

Description

The Parker UK Series is ideally suited for the UK Industrial market and is fitted with a bonded seal fluid port and ¼" BSP gas connection as standard (more options available).

The UK bladder accumulator offers a reliable and efficient solution for storing energy under pressure. Utilizing comprehensive tools and resources including an applications database, CAD/CAM, finite element analysis, reliability studies and simulation we have optimized the design and performance of the accumulator. Parker Olaer bladder accumulators are suitable for use in more than 35 countries (all hydraulic accumulators for Europe are CE marked) and they can meet an extensive range of international and industry approvals.

Rigorous product testing and continuous product development help to ensure our hydraulic accumulators operate at optimum efficiency and can perform in the most demanding environments. Parker accumulator accessories such as Safety Blocks, Burst Discs and Permanent Charging Sets, can aid the safe installation and operation of the accumulators in any hydraulic system.

Parker Olaer have developed very sophisticated simulation software to optimize sizing recommendations for hydraulic accumulators. You can download the accumulator sizing software from www.Parker.com/acde.

Features/Benefits

- **Extensive range of international and industry approvals (PED 2014/68/EU, EN 14359, ATEX, ASME VIII div 1 and PD5500)**
- **Rigorous product testing and continuous product development**
- **Large selection of materials and fittings to suit every hydraulic system.**
- **Parker Olaer offers a wealth of product knowledge and experience thus enabling us to provide first class technical support and customer service.**

Markets

- **Industrial**

Applications

- **Hydrostatic bearings**
- **Lubricating oil supplies**
- **Chucking systems**
- **Machine tools**
- **Safety/Emergency braking systems**

Tel: +45 63 12 83 00 | Email: ps@hymatik.com | www.hymatik.com | Hvidkaervej 27a, DK-5250 Odense SV, Denmark

Design & Features

Shell: Oil Service - seamless shell, designed and manufactured to PED 2014/68/EU and CE marked. Material - Chromium-molybdenum steel. Working pressure 207, 310, 345 and 420 bar. Water service as above with shell interior epoxy resin lined.

Label: With assembly specification and installation details.

Material Certification: Available on request for all major pressure loaded parts to EN 10204 3.1

Finish: One coat primer paint as standard. Special paints available.

Bladder: Totally enclosed construction with an extensive range of elastomers available. See page 5 for Bladder details.

Fluid Port Assembly: Integral high-flow port and poppet valve assembly with an anti-extrusion ring.

Safety: All gas-loaded accumulators are pressurised vessels and it is recommended that safety consideration be given to the application in which they are used. A relief valve should always be fitted to the hydraulic system with the option of a burst disc to protect the accumulator. See Installation and Servicing data sheet for information regarding installation of accumulators.

Pressure Testing: A hydro static pressure test is carried out on all our accumulator shells during the manufacturing process. We can carry out additional pressure testing witnessed by a specified Inspection Authority and/or customer as an optional extra if required. We can also carry out a hydro-pneumatic pressure test on the complete assembly as an optional extra if required. Again this can be witnessed by a specified inspection authority and/or customer.

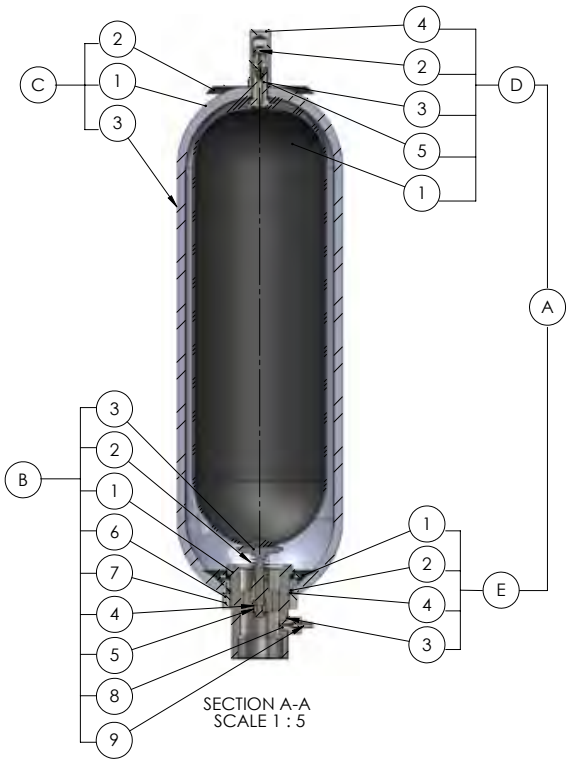

A	**Bladder Kit comprising:**
D	**Bladder assembly**
D1	Bladder
D2	Gas valve assembly
D3	Locknut
D4	Protective cap
D5	'O' ring stem
E	**Anti extrusion ring assembly**
E1	Anti extrusion ring
E2	'O' ring fluid port*
E3	Bonded seal
E4	Back-up ring

B	**Fluid port assembly comprising**
B1	Fluid port body
B2	Spring
B3	Poppet valve
B4	Collett
B5	Piston
B6	Flanged washer
B7	Locking ring
B8	Bleed adaptor*
B9	Bleed valve*

C	**Shell assembly comprising:**
C1	Shell
C2	Label
C3	Label warning

Note: Models 1/54 litres detailed above. Models 0.6 litres have Gas Valve assembly integral with bladder stem without protective cap fitted. * Not fitted on all models

UK Series 207 to 420 bar: How to order

03 0 0A-00-34 1

Volume in Litres

OB: for 0.16 Litres
OF: for 0.6 Litres
011: for 1 Litres
03: for 2.5 Litres
04: for 4 Litres
10: for 10 Litres
20: for 20 Litres
28: for 28 Litres
37: for 37 Litres
54: for 54 Litres

Bladder Material

0: Nitrile standard
1: Butyl
2: Low temperature nitrile
3: Low permeability nitrile
6: Viton
8: High temperature nitrile

Bladder Stem/Gas Valve

0.16 to 3 Litres
0A: 5/8"UNF CS Stem/ 1/4"BSP Brass Gas Valve
9A: 5/8"UNF CS Stem/ 0.302"-32 Brass Gas Valve

4-37 Litres
0A: 7/8"UNF CS Stem/ 1/4"BSP Brass Gas Valve
9A: n/a

54 Litres
0A: M50x1.5P CS Stem/ 1/4"BSP Brass Gas Valve
9A: M50x1.5P CS Stem/ 0.302"-32 Brass Gas Valve

Shell and Fluid Port

00: Oil service
02: Low/medium corrosive service (lined shell)
03: Underground mining - water service
04: Underground mining - oil service

Note: For other assembly options please contact your local Parker Sales Company.

Maximum Working Pressure

20: 207 bar
31: 310 bar
34: 345 bar
35: 350 bar
42: 420 bar (10-54L only)

Design Standard/ Authority Approval

1: Lloyds/CE

Nominal Capacity Litres	Effective Gas vol. Litres	Work press. bar	Max Flow Rate lt/min	Weight Dry Kilo	Dimensions in mm unless stated otherwise and subject to manufacturer's tolerances												
					A Inches	B Inches	C	D	E	F	G	H	J Inches	K	L	M	N	P
OB	0.16	345	27	2.00	¼ BSP	5/8 UNF	24	40	292	205	55	36	½ BSPF	26	-	-	-	23
OF	0.60	345	109	2.70	¼ BSP	5/8 UNF	24	40	266	175	90	37	¾ BSPF	35	-	-	-	32
011	1.15	207	109	5.4	¼ BSP	5/8 UNF	24	40	292	200	115	37	¾ BSPF	35	-	-	-	32
011	1.15	345	109	5.7	¼ BSP	5/8 UNF	23	40	292	200	115	37	¾ BSPF	35	-	-	-	32
03	2.5	345	215	10.00	¼ BSP	5/8 UNF	23	40	506	402	115	49	1 BSPF	44	5	32	15	41
04	3.8	207	477	15.20	¼ BSP	7/8 UNF	33	78	455	289	169	74	1 ¼ BSPF	60	36	39	9	55
04	3.8	345	477	15.20	¼ BSP	7/8 UNF	33	78	455	289	169	74	1 ¼ BSPF	60	36	39	9	55
10	9.4	207	749	35.00	¼ BSP	7/8 UNF	33	78	575	407	219	70	2 BSPF	76	36	46	9	69
10	9.4	310	749	35.00	¼ BSP	7/8 UNF	33	78	575	407	219	70	2 BSPF	76	36	46	9	69
10	9.4	345	749	35.00	¼ BSP	7/8 UNF	33	78	575	407	221	70	2 BSPF	76	36	46	9	69
10	9.4	420	749	34.00	¼ BSP	7/8 UNF	33	78	575	407	229	70	2 BSPF	76	36	46	9	69
20	18.8	207	749	55.00	¼ BSP	7/8 UNF	33	78	886	718	219	70	2 BSPF	76	36	46	9	69
20	18.8	310	749	55.00	¼ BSP	7/8 UNF	33	78	886	718	219	70	2 BSPF	76	36	46	9	69
20	18.8	345	749	55.00	¼ BSP	7/8 UNF	33	78	886	718	221	70	2 BSPF	76	36	46	9	69
20	18.8	420	749	54.00	¼ BSP	7/8 UNF	33	78	886	718	229	70	2 BSPF	76	36	46	9	69
28	25.8	207	749	61.00	¼ BSP	7/8 UNF	33	78	1158	990	221	70	2 BSPF	76	36	46	9	69
28	25.8	345	749	61.00	¼ BSP	7/8 UNF	33	78	1158	990	221	70	2 BSPF	76	36	46	9	69
37	35.2	207	749	91.00	¼ BSP	7/8 UNF	33	78	1407	1239	219	70	2 BSPF	76	36	46	9	69
37	35.2	310	749	91.00	¼ BSP	7/8 UNF	33	78	1407	1239	219	70	2 BSPF	76	36	46	9	69
37	35.2	345	749	91.00	¼ BSP	7/8 UNF	33	78	1407	1239	221	70	2 BSPF	76	36	46	9	69
37	35.2	420	749	86.00	¼ BSP	7/8 UNF	33	78	1407	1239	229	70	2 BSPF	76	36	46	9	69
54	49.2	207	749	130.00	¼ BSP	M50x 1.5	69	66	1922	1766	219	70	2 BSPF	76	36	46	9	69
54	49.2	310	749	130.00	¼ BSP	M50x 1.5	69	66	1922	1766	219	70	2 BSPF	76	36	46	9	69
54	49.2	345	749	130.00	¼ BSP	M50x 1.5	69	66	1922	1766	221	70	2 BSPF	76	36	46	9	69
54	49.2	420	749	119.00	¼ BSP	M50x 1.5	69	66	1922	1766	229	70	2 BSPF	76	36	46	9	69

Note: Dimensions are based on current stock and are subject to change without prior notice.

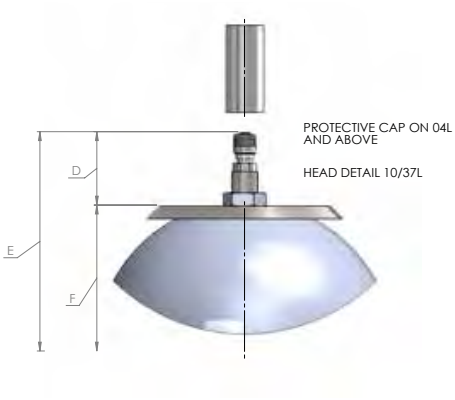

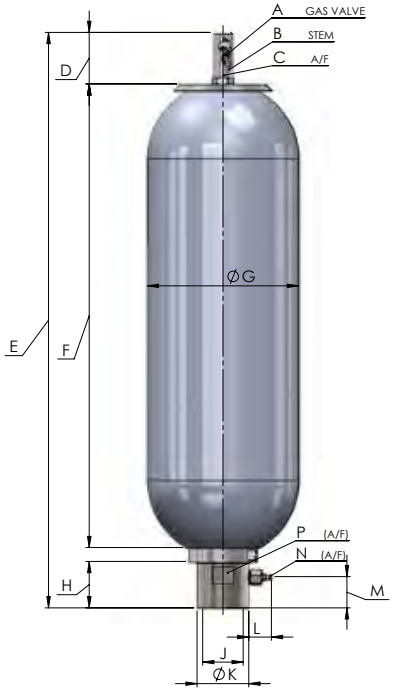

Notes

Tel: +45 63 12 83 00 | Email: ps@hymatik.com | www.hymatik.com | Hvidkaervej 27a, DK-5250 Odense SV, Denmark





aerospace
climate control
electromechanical
filtration
fluid & gas handling
hydraulics
pneumatics
process control
sealing & shielding





Oil and Gas - O&G Series Bladder Accumulators

High Pressure, 207 to 760 bar



Parker OLAER

ENGINEERING YOUR SUCCESS.

Description

Designed for high pressure hydraulic systems, the O&G bladder accumulator has been developed for the hazardous environments encountered within the Oil & Gas Industry and other aggressive environments. Carbon and stainless steel (up to 760 bar).

The O&G bladder accumulator is specially designed and developed for the hazardous environments encountered within the Oil and Gas industry however it is also ideally suited for other highly demanding markets. They meet a wide range of approvals and are tailor made to meet your requirements (e.g. special coatings, IP-class and ATEX/Ex approvals).

Utilizing comprehensive tools and resources including an applications database, CAD/CAM, finite element analysis, reliability studies and simulation we have optimized the design and performance of the accumulator. Parker Olaer bladder accumulators are suitable for use in more than 35 countries (all hydraulic accumulators for Europe are CE marked) and they can meet an extensive range of international and industry approvals.

Rigorous product testing and continuous product development help to ensure our hydraulic accumulators operate at optimum efficiency and can perform in the most demanding environments. Parker accumulator accessories such as Safety Blocks, Burst Discs and Permanent Charging Sets, can aid the safe installation and operation of the accumulators in any hydraulic system.

Parker Olaer have developed very sophisticated simulation software to optimize sizing recommendations for hydraulic accumulators. You can download the accumulator sizing software from www.Parker.com/acde.

Features/Benefits

- **Extensive range of international and industry approvals (PED 2014/68/EU, EN 14359, ATEX, ASME VIII div 1, SELO, CRN, AS1210, NR13, CUTR, DNV, BV Marine, ABS and GL)**
- **Rigorous product testing and continuous product development**
- **Large selection of materials and fittings to suit every hydraulic system.**
- **Parker Olaer offers a wealth of product knowledge and experience thus enabling us to provide first class technical support and customer service.**

Markets

- **Oil and Gas**
- **Industrial**

Applications

TOPSIDE APPLICATIONS

- **Intervention and Workover Control Systems (IWOCS) and Workover Control Systems (WOCS)**
- **Wellhead Control Panels (WHCP)**
- **Chemical Injection Skids**
- **Winch Systems**
- **A Frames**
- **Heave Compensation**
- **Davit Systems**
- **Cranes, Hydraulic Power Units (HPUs)**
- **Blow Out Preventers (BOP)**

SUBSEA APPLICATIONS

- **Christmas Trees**
- **Manifolds**
- **Blow Out Preventers (BOP)**
- **Subsea Accumulator Modules (SAMs) and/or Subsea Control Modules (SCMs)**

INDUSTRIAL

- **Hydraulic Power Units (HPUs)**
- **Plastic Moulding Machines**
- **Hydraulic Presses**

Technical Characteristics

The accumulator comprises of:

Shell
Forged seamless chrome molybdenum steel, designed and manufactured to PED 2014/68/EU and CE marked.

Label
With assembly specification and installation details.

Material Certification
Available on request for all major pressure loaded parts to EN 10204 3.1

Finish
One coat primer paint as standard. Special paints available.

Bladder
Totally enclosed construction with an extensive range of elastomers available.

Fluid Port Assembly
Integral high-flow port and poppet valve assembly with an anti-extrusion ring.

Safety
All gas-loaded accumulators are pressurised vessels and it is recommended that safety consideration be given to the application in which they are used. A relief valve should always be fitted to the hydraulic system with the option of a burst disc to protect the accumulator. See Installation and Servicing data sheet for information regarding installation of accumulators.

Pressure Testing
A hydro static pressure test is carried out on all our accumulator shells during the manufacturing process. We can carry out additional pressure testing witnessed by a specified Inspection Authority and/or customer as an optional extra if required.

We can also carry out a hydro-pneumatic pressure test on the complete assembly as an optional extra if required. Again this can be witnessed by a specified inspection authority and/or customer.

Accessories
A complete range of accumulator accessories are available from Parker.

Spare Parts
Available on request.

Bladder Details

Parker offer a wide range of bladder materials to suit most applications.

Table 1 - Material according to temperature range.
Range of bladder materials available with their corresponding working temperature range when handling non-aggressive fluids.

Material Code	Bladder Material	Temperature Range (Deg. C)			
		Static		Dynamic	
0	Nitrile	-20	100	-15	100
1	Butyl	-15	120	-15	120
2	Low Temp Nitrile	-40	70	-25	70
3	Low Permeability Nitrile	0	105		
6	Fluorocarbon (Viton)	-20	130		
7	High Aromatic Nitrile	0	105		
8	High Temp Nitrile	0	150		
9	EPI - Chlorohydin 100	-20	120		
A	Ethylene Propylene (EP)	-20	120		
B	EPI - Chlorohydin 200	-40	120		
K	Special Low Temp Nitrile	-79	100	-59	100
L	Peroxide Cured EPDM	please contact us for details			
M	High Temperature Fluro-carbon	-10	200		
N	Low Temp Nitrile	-45	70		

Table 2 - Bladder capacity / overall dimensions

Accumulator Capacity (Litres) Nominal	Dimension		Stem Diameters		
	"H"	"D"	5/8" (16mm)	7/8" (22mm)	2" (50mm)
0.16	154	41	*		
0.6	132	73	*		
1.15 (1.25)	147	91	*	*	
3	335	100	*	*	
4	203	142		*	
5	680	100		*	
6	305	142		*	
9 (10)	570	142		*	
12.5	655	142		*	
10	283	198		*	*
12	406	198			*
20	610	198		*	*
24.5	719	198			*
28	880	198		*	
37	1128	198		*	*
42	1280	198		*	
54	1603	198		*	*

O&G Series, 207 to 420 bar

A	**Bladder Kit comprising:**
D	**Bladder assembly**
D1	Bladder
D2	Gas valve assembly
D3	Locknut
D4	Protective cap
D5	'O' ring stem
E	**Anti extrusion ring assembly**
E1	Anti extrusion ring
E2	'O' ring fluid port
E3	Bonded seal*
E4	Back-up ring

B	**Fluid port assembly comprising**
B1	Fluid port body
B2	Spring
B3	Poppet valve
B4	Collett
B5	Piston
B6	Flanged washer
B7	Locking ring
B8	Bleed adaptor*
B9	Bleed valve*

C	**Shell assembly comprising:**
C1	Shell
C2	Label
C3	Label warning

Note: Models 1/54 litres detailed above. Models 0.6 litres have Gas Valve assembly integral with bladder stem without protective cap fitted. * Not fitted on all models

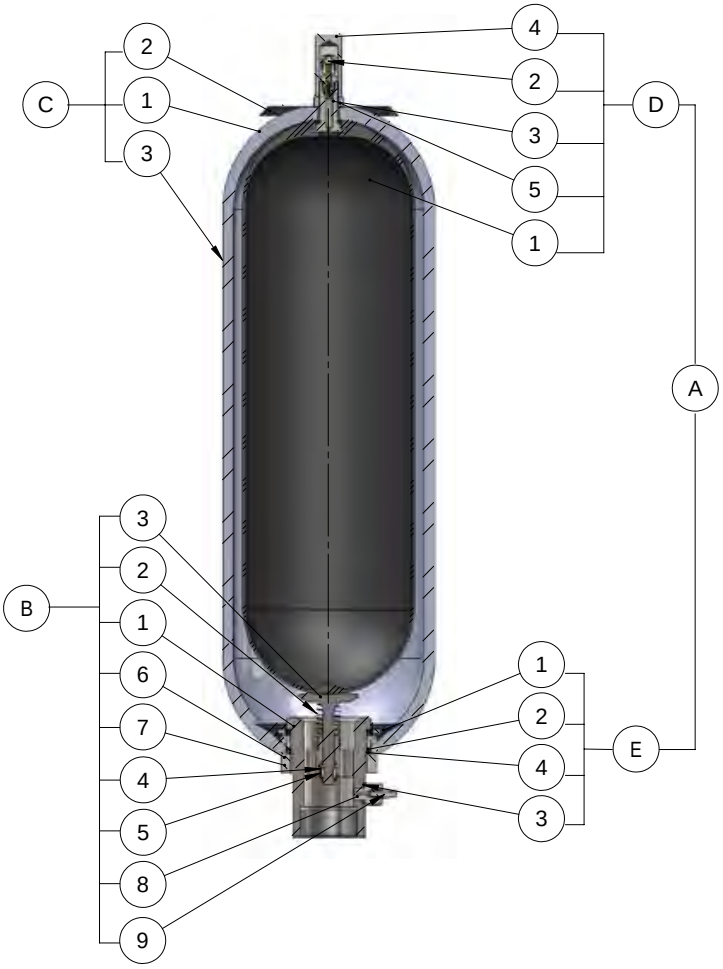

O&G Series 207 to 420 bar: How to order

0400A-00-341

Volume in Litres

OB: for 0.16 Litres
OF: for 0.6 Litres
011: for 1 Litres
03: for 2.5 Litres
04: for 4 Litres
10: for 10 Litres
20: for 20 Litres
28: for 28 Litres
37: for 37 Litres
54: for 54 Litres

Bladder Material

0: Nitrile standard
1: Butyl
2: Low temperature nitrile
3: Low permeability nitrile
6: Viton
8: High temperature nitrile

Bladder Stem/Gas Valve

	0.16 to 3 Litres	4-37 Litres
0A:	5/8"UNF CS Stem/ 1/4"BSP Brass Gas Valve	7/8"UNF CS Stem/ 1/4"BSP Brass Gas Valve
SA:	5/8"UNF SS Stem/ 1/4"BSP SS Gas Valve	7/8"UNF SS Stem/ 1/4"BSP Brass Gas Valve
3F:	n/a	7/8"UNF SS Stem/ 1/4"BSP SS Gas Valve
9A:	5/8"UNF CS Stem/ 0.302"-32 Brass Gas Valve	n/a
4A:	n/a	7/8"UNF CS Stem/ 0.302"-32 Brass Gas Valve
6A:	n/a	n/a

54 Litres

0A: M50x1.5P CS Stem/ 1/4"BSP Brass Gas Valve
SA:M50x1.5P SS Stem/ 1/4"BSP Brass Gas Valve
3F: M50x1.5P SS Stem/ 1/4"BSP SS Gas Valve
4A: 7/8"UNF CS Stem/ 0.302"-32 Brass Gas Valve
6A: M50x1.5P CS Stem/ 0.302"-32 Brass Gas Valve

Shell and Fluid Port

00: Oil service
02: Low/medium corrosive service (lined shell)
W6: Stainless steel externals, unlined shell
CZ: Stainless steel externals, unlined shell 1/2"NPT connection (10-54 litre only)
DW: Stainless steel externals, unlined shell 3/4"NPT connection (10-54 litre only)
DU: Stainless steel externals, unlined shell 1"NPT connection (10-54 litre only)
DL: Stainless steel externals, unlined shell 1/2"BSP connection (10-54 litre only)
EZ: Stainless steel externals, unlined shell 3/4"BSP "necked" connection (10-54 litre only)13:
13: Oil service (NPT connection)
14: Low/ medium corrosive service (lined shell, NPT connection)

Maximum Working Pressure

20: 207 bar
31: 310 bar
34: 345 bar
35: 350 bar
42: 420 bar (10-54L only)

Design Standard/ Authority Approval

1: Lloyds/CE

O&G Series 345 bar, 10 to 57 Litres

Standard version (Carbon Steel shell/NBR mix) compatible with mineral oils (2).
According to PED 2014/68/EU

Part numbers, Accessories, Dimensions

Part Number	Clamps	Support Bracket	Lifting Eye on gas side	Complete Repair Kit
	(quantity) Part number	Part number	Part number	Part number
100SA-CZ-341	10983	10961	FCH403922-3	100SA-CZ
200SA-CZ-341	10983	10961	FCH403922-3	200SA-CZ
280SA-CZ-341	10983	10961	FCH403922-3	280SA-CZ
370SA-CZ-341	10983	10961	FCH403922-3	370SA-CZ
540SA-CZ-341	10983	10961	10*5K-DC	540SA-CZ

* For more adaptor options see pages 74&75.

Nominal Capacity Litres	Effective Gas vol. Litres	Work press. bar	Max Flow Rate lt/min	Weight Dry Kilo	Dimensions in mm unless stated otherwise and subject to manufacturer's tolerances												
					A Inches	B Inches	C	D	E	F	G	H	J Inches	K	L	M	N	P
OB	0.16	345	27	2.00	¼ BSP	5/8 UNF	24	40	292	205	55	36	½ BSPF	26	-	-	-	23
OF	0.60	345	109	2.70	¼ BSP	5/8 UNF	24	40	266	175	90	37	¾ BSPF	35	-	-	-	32
011	1.15	207	109	5.4	¼ BSP	5/8 UNF	24	40	292	200	115	37	¾ BSPF	35	-	-	-	32
011	1.15	345	109	5.7	¼ BSP	5/8 UNF	23	40	292	200	115	37	¾ BSPF	35	-	-	-	32
03	2.5	345	215	10.00	¼ BSP	5/8 UNF	23	40	506	402	115	49	1 BSPF	44	5	32	15	41
04	3.8	207	477	15.20	¼ BSP	7/8 UNF	33	78	455	289	169	74	1 ¼ BSPF	60	36	39	9	55
04	3.8	345	477	15.20	¼ BSP	7/8 UNF	33	78	455	289	169	74	1 ¼ BSPF	60	36	39	9	55
10	9.4	207	749	35.00	¼ BSP	7/8 UNF	33	78	575	407	230	70	2 BSPF	76	36	46	9	69
10	9.4	310	749	35.00	¼ BSP	7/8 UNF	33	78	575	407	230	70	2 BSPF	76	36	46	9	69
10	9.4	345	749	35.00	¼ BSP	7/8 UNF	33	78	575	407	230	70	2 BSPF	76	36	46	9	69
10	9.4	420	749	34.00	¼ BSP	7/8 UNF	33	78	575	407	226	70	2 BSPF	76	36	46	9	69
20	18.8	207	749	55.00	¼ BSP	7/8 UNF	33	78	886	718	230	70	2 BSPF	76	36	46	9	69
20	18.8	310	749	55.00	¼ BSP	7/8 UNF	33	78	886	718	230	70	2 BSPF	76	36	46	9	69
20	18.8	345	749	55.00	¼ BSP	7/8 UNF	33	78	886	718	230	70	2 BSPF	76	36	46	9	69
20	18.8	420	749	54.00	¼ BSP	7/8 UNF	33	78	886	718	226	70	2 BSPF	76	36	46	9	69
28	25.8	207	749	61.00	¼ BSP	7/8 UNF	33	78	1158	990	230	70	2 BSPF	76	36	46	9	69
28	25.8	345	749	61.00	¼ BSP	7/8 UNF	33	78	1158	990	230	70	2 BSPF	76	36	46	9	69
37	35.2	207	749	91.00	¼ BSP	7/8 UNF	33	78	1407	1239	230	70	2 BSPF	76	36	46	9	69
37	35.2	310	749	91.00	¼ BSP	7/8 UNF	33	78	1407	1239	230	70	2 BSPF	76	36	46	9	69
37	35.2	345	749	91.00	¼ BSP	7/8 UNF	33	78	1407	1239	230	70	2 BSPF	76	36	46	9	69
37	35.2	420	749	86.00	¼ BSP	7/8 UNF	33	78	1407	1239	226	70	2 BSPF	76	36	46	9	69
54	49.2	207	749	130.00	¼ BSP	M50x 1.5	69	66	1922	1766	230	70	2 BSPF	76	36	46	9	69
54	49.2	310	749	130.00	¼ BSP	M50x 1.5	69	66	1922	1766	230	70	2 BSPF	76	36	46	9	69
54	49.2	345	749	130.00	¼ BSP	M50x 1.5	69	66	1922	1766	230	70	2 BSPF	76	36	46	9	69
54	49.2	420	749	119.00	¼ BSP	M50x 1.5	69	66	1922	1766	226	70	2 BSPF	76	36	46	9	69

Part Number	Vol. (Litres)	Max. Operating Pressure (bar)	Max. Flow Rate (lpm)	Min/Max Operating Temp. (ºC)	Weight (kg)	Dimensions												
						Gas Valve Size (A) (Inch)	B	C	D	E	F	G	H	Fluid Port Connection (J)	K	L	M	N	P
100SA-CZ-341	10	345	110	-20/+80	35	G 1/4	7/8 UNF	33	78	553	407	230	48	½"NPTF	76	36	46	9	69
200SA-CZ-341	20	345	110	-20/+80	55	G 1/4	7/8 UNF	33	78	864	718	230	48	½"NPTF	76	36	46	9	69
280SA-CZ-341	28	345	110	-20/+80	61	G 1/4	7/8 UNF	33	78	1136	990	230	48	½"NPTF	76	36	46	9	69
370SA-CZ-341	37	345	110	-20/+80	91	G 1/4	7/8 UNF	33	78	1385	1239	230	48	½"NPTF	76	36	46	9	69
540SA-CZ-341	54	345	110	-20/+80	130	G 1/4	M50x1.5	69	66	1900	1766	230	48	½"NPTF	76	36	46	9	69

(1)Temperature range can change depending on shell and elastomer material. Please see bladder materials and Type (page 87)

Above dimensions are in mm and are subject to manufacturing tolerances.

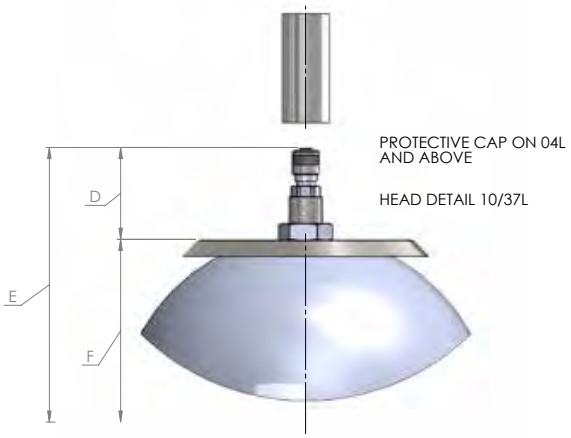

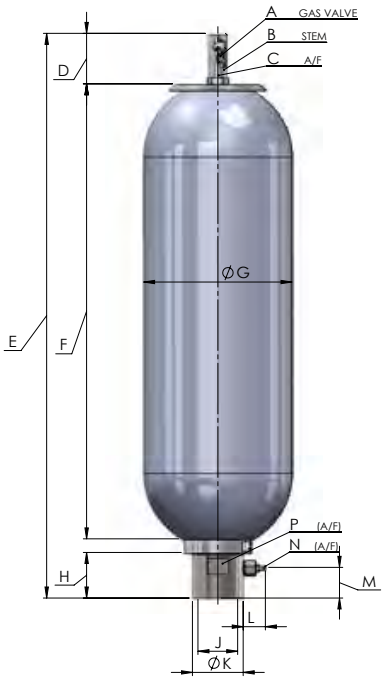

Tel: +45 63 12 83 00 | Email: ps@hymatik.com | www.hymatik.com | Hvidkaervej 27a, DK-5250 Odense SV, Denmark

O&G Series, 480 & 517 bar

A	**Bladder Kit comprising:**
D	**Bladder assembly**
D1	Bladder
D2	Gas valve assembly
D3	Locknut
D4	Protective cap
D5	'O' ring stem
E	**Anti extrusion ring assembly**
E1	Anti extrusion ring
E2	'O' ring fluid port*
E3	Bonded seal
E4	Back-up ring

B	**Fluid port assembly comprising**
B1	Fluid port body
B2	Spring
B3	Poppet valve
B4	Collett
B5	Piston
B6	Flanged washer

C	**Shell assembly comprising:**
C1	Shell
C2	Label
C3	Label warning

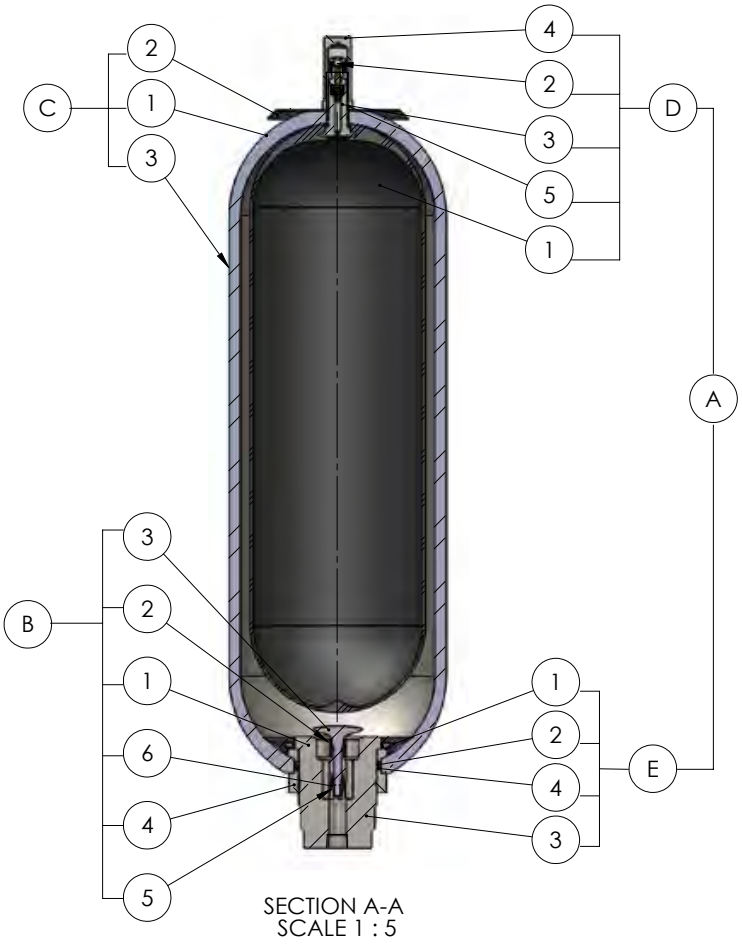

SECTION A-A
SCALE 1 : 5

O&G Series 480 and 517 bar: Dimensions

Capacities and Dimensions

Nominal Capacity Litres	Effective Gas vol. Litres	Work press. bar	Max Flow Rate lt/min	Weight Dry Kilo	Dimensions in mm unless stated otherwise and subject to manufacturer's tolerances										
					A Inches	B Inches	C	D	E	F	G	H	J Inches	K	L
10	9.4	480	215	34	¼ BSP	7/8 UNF	33	78	575	407	229	70	see table	76	69
10	9.4	517	215	54	¼ BSP	7/8 UNF	33	78	575	407	243	70		76	69
20	18.8	480	215	54	¼ BSP	7/8 UNF	33	78	886	718	229	70		76	69
20	18.8	517	215	100	¼ BSP	7/8 UNF	33	78	886	718	243	70		76	69
37	35.2	480	215	86	¼ BSP	7/8 UNF	33	78	1407	1239	229	70		76	69
37	35.2	517	215	152	¼ BSP	7/8 UNF	33	78	1407	1239	243	70		76	69
54	49.2	480	215	119	¼ BSP	M50x 1.5P	69	66	1922	1766	229	70		76	69
57	54.5	517	215	220	¼ BSP	M50x 1.5P	69	66	1980	1824	243	70		76	69

Note: Dimensions are based on current stock and are subject to change without prior notice.

Dimension J

Code	Shell and Fluid Port
EH	Stainless Steel - 1/2" NPT female (480 bar)
GC	Stainless Steel - 1/2" BSP female (517 bar)
GJ	Stainless Steel - 1/2" BSP female (480 bar)
JB	Stainless Steel - 1/2" NPT female (517 bar)

Other available on request.

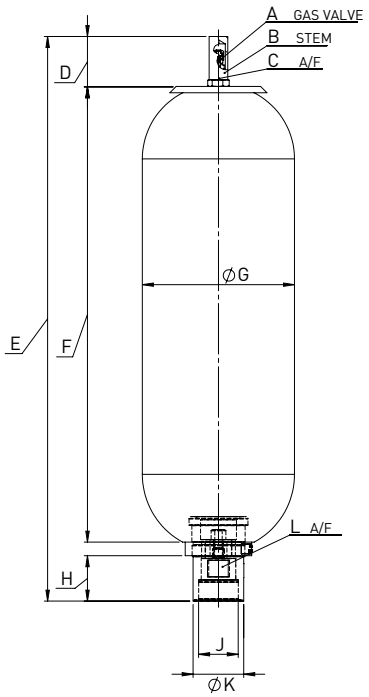

O&G Series 480 to 517 bar: How to order

1001M-EH-48

Volume in Litres

10: for 10 Litres
20: for 20 Litres
28: for 28 Litres
37: for 37 Litres (480 bar only)
54: for 54 Litres (517 bar only)

Bladder Material

0: Nitrile standard
1: Butyl
2: Low temperature nitrile
3: Low permeability nitrile
6: Viton
8: High temperature nitrile

Bladder Stem/Gas Valve

10 to 37 Litres
1M: 7/8“UNF SS Stem / 1/4“ BSP SS HP Gas Valve
3N: 7/8“UNF SS Stem / 1/2“ UNF Port (No Gas Valve/Pro Cap)

54 Litres
1M: M50 x 1.5P SS Stem / 1/4“ BSP SS HP Gas Valve
3N: M50 x 1.5P SS Stem / 1/2“ UNF Port (No Gas Valve/Pro Cap)

Shell and Fluid Port

EH: St. Steel Fluid Port - 1/2” NPT female (480 bar)
GC: St. Steel Fluid Port - 1/2” BSP female (517 bar)
GJ: St. Steel Fluid Port - 1/2” BSP female (480 bar)
JB: St. Steel Fluid Port - 1/2” NPT female (517 bar)

Maximum Working Pressure

48: 480 bar
51: 517 bar

Maximum Working Pressure

1: Lloyds/CE

O&G Series, 690 to 760 bar

A	**Bladder Kit comprising:**
D	**Bladder assembly comprising of:-**
D1	Bladder
D2	Gas valve assembly
D3	Locknut
D4	Protective cap
D5	'O' ring stem
D6	Lifting Eye
E	**Anti extrusion ring assembly:-**
E1	Anti extrusion ring
E2	'O' ring fluid port*
E3	Back-up ring

B	**Fluid port assembly comprising:-**
B1	Fluid port body
B2	Spring
B3	Poppet valve
B4	Collett
B5	Piston
B6	Flanged washer
B7	Lock ring

C	**Shell assembly comprising:**
C1	Shell
C2	Label
C3	Label warning

F	**Lifting Eye Assembly:-**
F1	Protective cap
F2	Lifting Eye

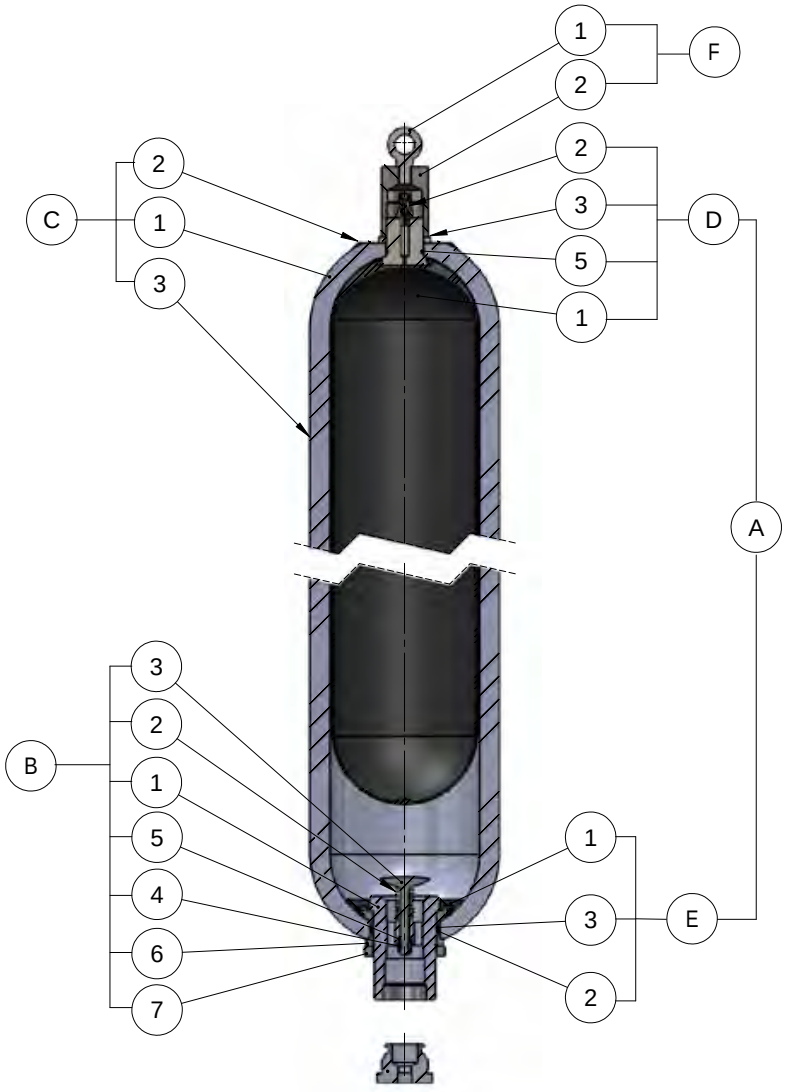

O&G Series 690 to 760 bar: Dimensions

Nominal Capacity Litres	Effective Gas vol. Litres	Work press. bar	Q Max (l/min)	Weight Dry Kilo	Dimensions in mm unless stated otherwise and subject to manufacturer's tolerances										
					A Inches	B Inches	C	D	E	F	G	H	J	K	L
1	1.1	690	240	9	See Below	7/8"UNF	33	69	376	239	122	68	See Below	48	45
3	2.4	690	240	15		7/8" UNF	33	69	551	414	122	68		48	45
5	5	690	240	29		7/8" UNF	33	69	900	763	122	68		48	45
12	9.4	690	749	97		M50x1.5P	69	166	768	518	267	84		82	77
12	9.4	760	749	97		M50x1.5P	69	166	768	518	267	84		82	77
20	18.8	690	749	134		M50x1.5P	69	166	978	728	267	84		82	77
20	18.8	760	749	134		M50x1.5P	69	166	978	728	267	84		82	77
37	35.2	690	749	227		M50x1.5P	69	166	1500	1250	267	84		82	77
37	35.2	760	749	227		M50x1.5P	69	166	1500	1250	267	84		82	77
54	49.2	690	749	318		M50x1.5P	69	166	2015	1765	267	84		82	77
54	49.2	760	749	318		M50x1.5P	69	166	2015	1765	267	84		82	77

1 - 5 Litre

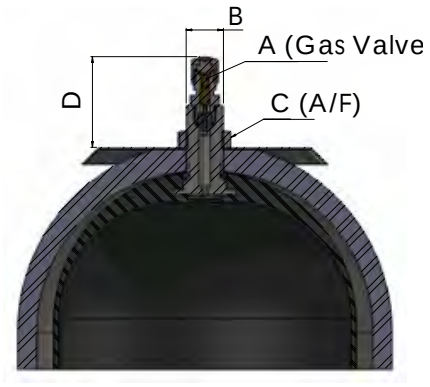

12 Litre and above accumulators include a lifting eye

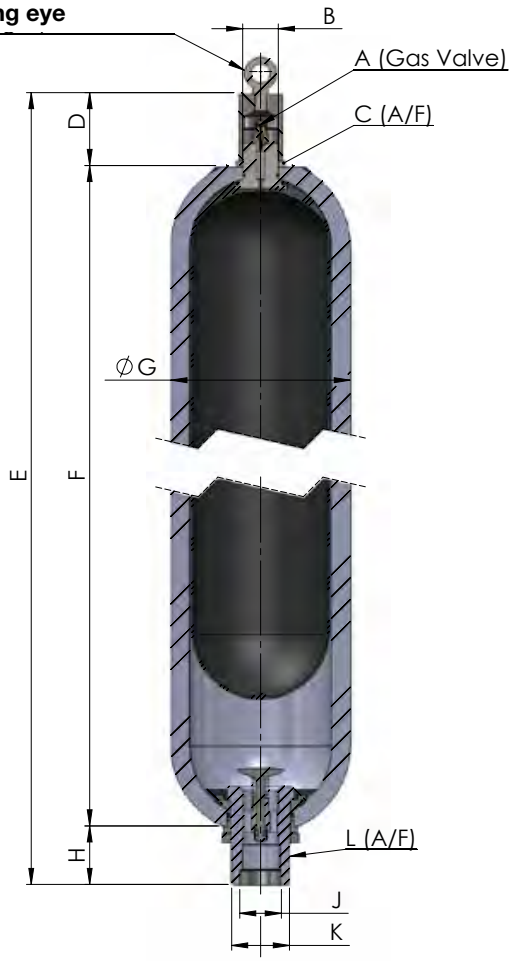

Dimension A - Bladder Stem/Gas Valve

Code	1 - 5 Litre	12 - 54 Litre
2L	7/8"UNF SS Stem / 1/4"BSP SS HP Gas Valve	
5K		M50x1.5P SS Stem / 1/4"BSP SS HP Gas Valve

Dimension J - Shell and Fluid Port

Code	1 - 5 Litre	12 - 54 Litre
DP	Stainless Steel / 1"BSP Female Special	
DC		SS Externals/CS Internals / 2"BSP Female Special
DF		SS Externals/SS Internals / 2"BSP Female Special

Note: Dimensions are based on current stock and are subject to change without prior notice.

O&G Series 690 to 760 bar: How to order

0502L-DP-691

Volume in Litres

011: for 1 Litres
03: for 2.5 Litres
05: for 5 Litres
12: for 12 Litres
20: for 20 Litres
37: for 37 Litres
54: for 54 Litres

Bladder Material

0: Nitrile standard
1: Butyl
2: Low temperature nitrile
3: Low permeability nitrile
6: Viton
8: High temperature nitrile

Bladder Stem/Gas Valve

1 - 5 Litres
2L: 7/8“UNF SS Stem / 1/4“ BSP SS HP Gas Valve

12 - 54 Litres
5K: M50 x 1.5P SS Stem / 1/4“ BSP SS HP Gas Valve

Shell and Fluid Port

1 - 5 Litres
DP: St. Steel Fluid Port / 1”BSP Female Special

12 - 54 Litres
DC: SS Externals/ CS Internals/ 2” BSP Female Special
DF: SS Externals/ SS Internals/ 2” BSP Female Special
(see table on next page for fluid port adaptors)

Maximum Working Pressure+

69: 690 bar
75: 750 bar (1-5 litre only)
76: 760 bar (12-54 litre only)

Maximum Working Pressure

1: Lloyds/CE

Fluid Port Adaptors

Nominal Capacity (Litres)	Dimensions			Part Number
	J	N	P (mm)	
1 - 5 litres	1"BSP	1/4"BSP	10	52799-XXX
	1"BSP	3/8" BSP	10	55456-XXX
	1"BSP	1/2" BSP	30	54260-XXX
	1"BSP	3/4" BSP	30	52762-XXX
	1"BSP	1/4" NPT	30	55712-XXX
	1"BSP	1/2" NPT	30	51059-XXX
	1"BSP	3/4" NPT	30	52113-XXX
	1"BSP	3/8"MP Autoclave	30	56002-XXX
	1"BSP	9/6"MP Autoclave	30	52722-XXX
12 - 54 litres	2"BSP	1/4"BSP	13	55374-XXX
	2" BSP	3/8"BSP	13	55375-XXX
	2" BSP	1/2"BSP	13	55376-XXX
	2" BSP	3/4"BSP	13	55377-XXX
	2" BSP	1/4"NPT	13	55369-XXX
	2" BSP	3/8"NPT	13	55370-XXX
	2" BSP	1/2"NPT	13	55371-XXX
	2" BSP	3/4"NPT	13	55372-XXX
	2" BSP	1/4"MP Autoclave	38	54116-XXX
	2" BSP	3/8"MP Autoclave	38	55873-XXX

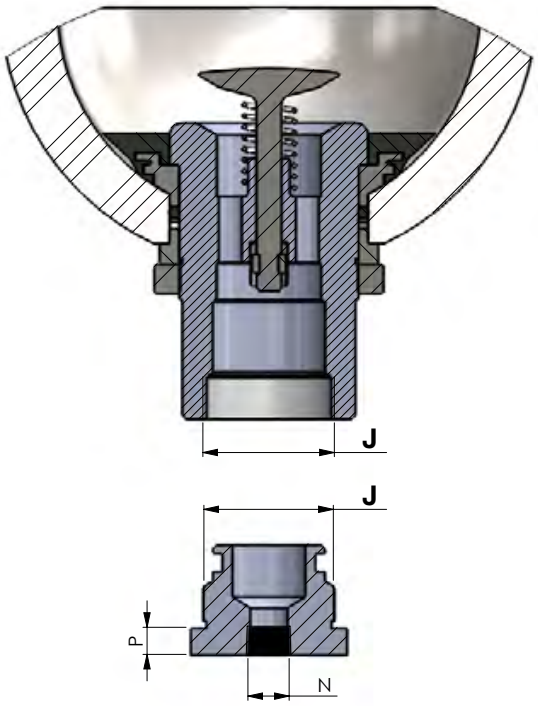

Tel: +45 63 12 83 00 | Email: ps@hymatik.com | www.hymatik.com | Hvidkaervej 27a, DK-5250 Odense SV, Denmark





aerospace
climate control
electromechanical
filtration
fluid & gas handling
hydraulics
pneumatics
process control
sealing & shielding





ACP Series - Crimped Piston Accumulators

0.02 to 8 Litres, up to 275 bar



Parker OLAER

ENGINEERING YOUR SUCCESS.

Description

Piston Accumulator designed for Mobile applications up to 38 litres, 150mm bore and 275 bar. The ACP piston accumulator offers long, reliable service life and due to its compact & cost effective design it is ideally suited for the mobile market.

The ACP piston accumulators incorporate a patented crimped design that provides high-strength coupling of caps to steel tube plus superior fatigue life. High grade carbon steel tube and end cap material allows heat to dissipate effectively and is micro-finished for extended seal life. The ACP series is a good alternative to a diaphragm accumulator as it is can provide enhanced nitrogen gas retention and has a compact and lightweight design.

Although these accumulators are offered in standard capacities, the steel shell design affords an easy way to “custom” manufacture an accumulator to meet the exact capacity for any customer application.

ACP piston accumulators are available in two versions; Rechargeable or Tamperproof. Rechargeable models allow the user to monitor and regulate the gas pre-charge to suit different operating conditions. Tamperproof, sealed-for-life versions of the ACP are pre-charged on assembly to customer specification and are completely maintenance free.

Parker Olaer have developed very sophisticated simulation software to optimize sizing recommendations for hydraulic accumulators. You can download the accumulator sizing software from www.Parker.com/acde.

Features/Benefits

- **The ACP piston accumulator is manufactured to EU Pressure Equipment Directive 2014/68/EU – and can be used in any European Union or EEA country without additional certification.**
- **The high-strength crimped construction provides long, reliable service life and its small piston seal area minimizes permeability. The piston design also prevents sudden accumulator failure.**
- **The ACP piston accumulator is available in a wide range of lengths and bore sizes and allows installation to be adapted to available space. Custom sizes are available for unique applications. Rechargeable and ‘tamperproof’ versions are available with (for customer charging) or without the gas valve.**
- **A wide range of port types and sizes are available. SAE straight thread are fitted as standard. BSPP is a standard option.**
- **The lightweight piston design allows fast response to reduce shock in rapid cycling applications.**
- **Parker’s piston accumulators are compatible with a wide variety of fluids. Standard accumulators (with nitrile seals) may be used with petroleum-based industrial oils or water-based flame resistant fluids. Optional seals compatible with most industrial fluids are available with temperature ranges from -40°C to 160°C.**
- **High burst test safety factor.**

Markets

- **Mobile**
- **Construction Equipment**
- **Material Handling Equipment**
- **Renewable Energy**
- **Agricultural Machinery**

Applications

Ideal for mobile and construction equipment



Fork lifts and cherry pickers
- pressure spike damping

Transportation vehicles
- suspension and braking systems

Construction and Mining
- suspension and load stabilising systems, emergency back-up steering, braking and pilot circuits



Turbine Engines
- maintaining oil pressure for lubrication

Machine Tools
- energy saving

Hydrostatic Drives
- shock absorption when changing direction

Assembly Automation
- reducing noise and smoothing pump pulsations

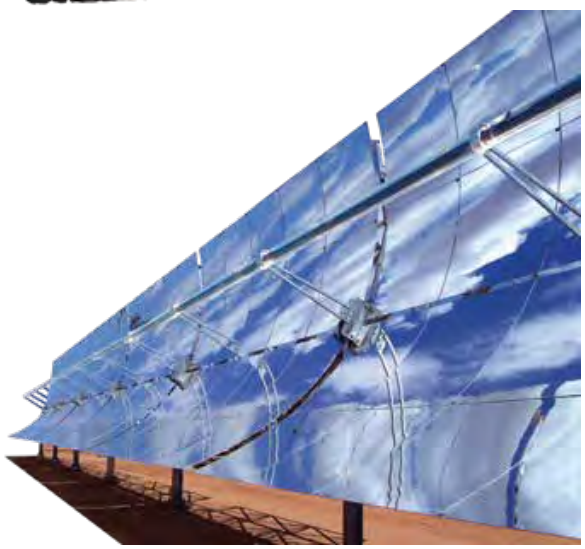

Renewable Energy (Wind and Solar)
- Braking systems for wind turbines

Main Features

Actual Bore Sizes & Maximum Flow Rates

Bore Size	Actual Bore Size		Max. Recommended Flow Rate*
mm	in	mm	l/m
40	1.50	38.20	209
50	2.02	51.44	380
80	3.00	76.20	834
100	4.03	102.4	1504

*Note: Based on 120 in/sec maximum piston speed, port & fitting size will become limiting factors for most applications.

Bore Size, Pressures & Temperature Range

Bore Size (mm)	Max. Working Pressure (bar)	Volume (Litres)		*Maximum Working Temperature Range °C
		Min	Max	
40	260	0.02	0.75	-20°C to +150°C
50	275	0.08	2	-20°C to +150°C Material to -40°C available on request
80	275	0.25	8	
100	275	0.7	12	

*Maximum working temperature range could be limited to sealing system used (see temperature range below)

Materials

- Shell - Carbon Steel
- Caps - Carbon Steel
- Pistons - Aluminium
- Gas Valve Body - Carbon Steel
- Gas Valve Cap - Carbon Steel
- Piston Glide Rings - PTFE
- Piston & End Seals - Various polymers
- Piston Seal Backups - PTFE

Rechargeable or 'Tamperproof' Designs

ACP Series accumulators are available in two versions. Rechargeable models allow the user to monitor and regulate the gas pre-charge to suit different operating conditions, and feature a Schrader-type gas valve cartridge to ISO 4570 8V1. Tamperproof, sealed-for-life versions of the ACP are pre-charged on assembly to customer specification and are completely maintenance-free.

Seals, Fluids and Temperature Ranges

Code	ACP Seals	"Min Temp"	"Max Temp"	"Fluid Classification"	"Fluid Type"	Maximum Velocity (m/s)
K	"NBR (Nitrile)"	-29°C	74°C	"HFB-HFC HM-HV"	"Mineral Oils & Water Glycols"	4 m/s
H	"HNBR (Hydrogenated Nitrile)"	-32°C	150°C	"HFB-HFC HM-HV"	"Mineral Oils & Water Glycols"	4 m/s
E	"FPM (Fluorocarbon elastomer)"	-23°C	121°C	"HFB HM-HV"	"Synthetic Oils"	4 m/s
D	"EPDM (Ethylene Propylene)"	-40°C	121°C	HFD	"Ester Fluids"	4 m/s
Q	"LT-NBR (Low Temperature Nitrile)"	-45°C	71°C	HM-HV	"Mineral Oils"	4 m/s
X	"Low Friction T Seal Consult Parker ACDE"	-43°C	121°C	HM-HV	"Mineral Oils & Water Glycols"	4 m/s
S	"Special Consult Parker ACDE"			TBA	TBA	4 m/s

Tel: +45 63 12 83 00 | Email: ps@hymatik.com | www.hymatik.com | Hvidkaervej 27a, DK-5250 Odense SV, Denmark

Features and Benefits

Lightweight Piston

The ACP Series feature a dished, lightweight aluminium piston deep-walled for stability in the bore.

- High efficiency - fast response times
- Reduced system shock in rapid cycling applications
- Extra gas capacity

Rugged Construction

ACP Series accumulators feature high strength, compact, steel shell and caps, permanently joined and sealed by a revolutionary crimping process.

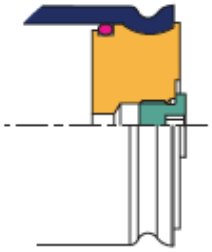

- Effective heat dissipation prevents fluid and seal degradation
- Superior fatigue life
- Micro-finished for extended seal life

Effective, Durable Sealing

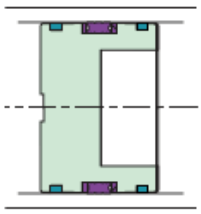

50mm bore models feature Parker's unique, patented five bladed V-O-ring piston seal. The 40mm model combines an elastomeric seal with a low friction PTFE piston ring. All models employ PTFE bearing rings to eliminate metal-to-metal contact between the tube and piston.

- Dependable, full pressure storage of hydraulic energy
- Effective separation of fluid and gas for long service intervals
- Reduced wear for extended service life
- Safe in operation - cannot suffer catastrophic failure

Protective Steel Gas Cap

Models fitted with a gas valve are supplied with a protective steel cap. Tamperproof versions are fitted with a threaded plug which provides progressive release of pre-charge pressure prior to safe disposal.

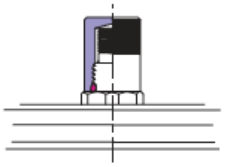

- Steel cap reduces the risk of damage from external impact
- Security - cap provides a secondary seal

Spanner Holes

To permit easy installation on hydraulic manifolds, or in areas where mounting space is restricted, spanner holes are provided on all models.

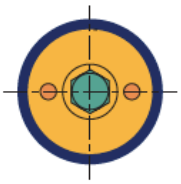

External Coasting

- Standard Black Paint according to AES-20
- Optional Nickel-plating
- Other options available upon request

Cleanliness & Flushing

- Maximum ISO Code Cleanliness Acceptable
- ISO 4406 18/16/13
- Customised flushing is available upon request

Approvals

Approvals	ACP04*	ACP05	ACP08	ACP10
PED 2014/68/EU		•	•	•
CRN		•	•	•
AS 1210		•	•	•

* ACP04 is manufactured in accordance with article 3.3 of PED

Capacity

ACP04

Code	Model	Volume (Litres)
002	04	0.02
008	04	0.08
016	04	0.16
050	04	0.5
075	04	0.75

ACP05

008	05	0.08
016	05	0.16
032	05	0.32
050	05	0.50
075	05	0.75
100	05	0.95
125	05	1.25
150	05	1.50
175	05	1.75
200	05	2.00

ACP08

Code	Model	Volume (Litres)
025	08	0.25
050	08	0.50
100	08	1.00
150	08	1.50
200	08	2.00
250	08	2.50
300	08	3.00
400	08	4.00
500	08	5.00
600	08	6.00
700	08	7.00
800	08	8.00

ACP10

070	10	0.70
100	10	1.00
150	10	1.50
200	10	2.00
300	10	3.00
400	10	4.00
500	10	5.00
1000	10	10.00
1100	10	11.00
1200	10	12.00

ACP15

Code	Model	Volume (Litres)
300	15	3.00
400	15	4.00
500	15	5.00
600	15	6.00
700	15	7.00
800	15	8.00
4000	15	40.00

Fluid Ports

Port Type	Code	ACP04	ACP05	ACP08	ACP10	ACP15
SAE6 Female	TB	•	•	•	•	•
SAE8 Female	TC		•	•	•	•
SAE10 Female	TI		•	•	•	•
SAE12 Female	TD			•	•	•
SAE16 Female	TE			•	•	•
SAE12 Male	AD	•	•	•	•	•
SAE16 Male	AE		•	•	•	•
G1/4	RH	•	•	•	•	•
G3/8	RA	•	•	•	•	•
G1/2	RB	•	•	•	•	•
G3/4	RC		•	•	•	•
G 1	RD		•	•	•	•
G 1 1/2	RE					•
G3/4 Male	LC			•	•	•
G 1 Male	LD			•	•	•
G 1 1/2 Male	LE					•
M14 x 1.5 Female	GA	•	•	•	•	•
M18 x 1.5 Female	GB	•	•	•	•	•
M22 x 1.5 Female	GC		•	•	•	•
M18 x 1.5 Male	HB	•	•	•	•	•
M22 x 1.5 Male	HC	•	•	•	•	•

Tel: +45 63 12 83 00 | Email: ps@hymatik.com | www.hymatik.com | Hvidkaervej 27a, DK-5250 Odense SV, Denmark

ACP Series: How to order

Series	Type	Model	Type of Construction	Options	Capacity	Working Pressure	Design Number	Seal Type	Port Size	Pre-Charge
AC	P	04	E	A	008	R	2	K	RA	/ 010

AC Series Accumulator

Code	Type
P	Piston
G	Gas bottle

Code	Bore Size (nominal)
04	40 mm
05	50 mm
08	80 mm
10	100 mm
15	150 mm

Code	Approval Type
E	To PED 2014/68/EU- For use in Europe
A	No approvals - not for European use

Code	Valve Options
A	Gas valve - Standard
D	Steel plug - Sealed unit
M	Gas Valve - Mil Spec SS
	Leave blank if no gas valve required

Please see Capacity table on page 114

Code	Maximum Working Pressure
R	260 bar (40 mm bore only)
E	275 bar (50, 80 and 100 mm bore only)

Code	Port
1	SAE port
2	BSPP port
3	Special
4	Metric port

Code	Service/Fluid
D	Phosphate-esters Low temperatures
E	Fluoreslatomer High Temperatures
K	Nitrile Standard
H	Hydrogenated nitrile xtended temperature range
S	Special

Please see Fluid Port table on page 114

Code	Pre-Charge (for example)
010	10 bar
020	20 bar
030	30 bar

ACP Series 275 bar(260 bar), 0.02 to 40 Litres

ACP - Crimped Piston Accumulators **with Gas Valve (code A)**

Standard version (Carbon Steel shell/seal NBR) compatible with mineral oils (2).

According to PED 2014/68/EU, EN 14359, Fluid Group 2 (3).

Product , Part numbers, Accessories

Part number	**Effective gas Volume** (Litres)	**Max. Working Pressure** (PS)bar	**Max Flow Rate** l/ mn***	**Weight (Kg)**	A	C	øD	ø Bore (Nominal)	G (BSPP) Female	G (BSPP) Male
ACP04AA002R2K*	0.02	260	209	0.6	104	25.4	44.5	40	G3/8	G3/4
ACP04AA008R2K*	0.08	260	209	0.7	157	25.4	44.5	40	G3/8	G3/4
ACP04AA016R2K*	0.16	260	209	1	227	25.4	44.5	40	G3/8	G3/4
ACP04AA032R2K*	0.32	260	209	1.4	367	25.4	44.5	40	G3/8	G3/4
ACP04AA050R2KRB*	0.50	260	209	1.9	525	25.4	44.5	40	G3/8	G3/4
ACP04AA075R2K*	0.75	260	209	2.5	743	25.4	44.5	40	G3/8	G3/4
ACP05EA008E2K**	0.08	275	380	1.5	140	25.4	60.5	50	G3/4	G1
ACP05EA016E2K**	0.16	275	380	1.8	179	25.4	60.5	50	G3/4	G1
ACP05EA032E2K**	0.32	275	380	2.3	256	25.4	60.5	50	G3/4	G1
ACP05EA050E2K**	0.50	275	380	2.8	343	25.4	60.5	50	G3/4	G1
ACP05EA075E2K**	0.75	275	380	3.5	463	25.4	60.5	50	G3/4	G1
ACP05EA100E2K**	0.95	275	380	4.1	583	25.4	60.5	50	G3/4	G1
ACP05EA125E2K	1.25	275	380	5	704	25.4	60.5	50	G3/4	G1
ACP05EA150E2K	1.50	275	380	5.7	824	25.4	60.5	50	G3/4	G1
ACP05EA175E2K	1.75	275	380	6.5	944	25.4	60.5	50	G3/4	G1
ACP05EA200E2K	2.00	275	380	7.2	1065	25.4	60.5	50	G3/4	G1
ACP08EA025E2K	0.25	275	834	4.8	183	25.4	90.4	80	G3/4	G1
ACP08EA032E2K	0.32	275	834	5	198	25.4	90.4	80	G3/4	G1
ACP08EA050E2K	0.50	275	834	5.6	238	25.4	90.4	80	G3/4	G1
ACP08EA100E2K	0.95	275	834	7	336	25.4	90.4	80	G3/4	G1
ACP08EA150E2K	1.50	275	834	8.8	457	25.4	90.4	80	G3/4	G1
ACP08EA200E2K	2.00	275	834	10.4	566	25.4	90.4	80	G3/4	G1
ACP08EA250E2K	2.50	275	834	12	676	25.4	90.4	80	G3/4	G1
ACP08EA300E2K	3.00	275	834	13.6	786	25.4	90.4	80	G3/4	G1
ACP08EA400E2K	4.00	275	834	16.8	1005	25.4	90.4	80	G3/4	G1
ACP08EA500E2K	5.00	275	834	20	1225	25.4	90.4	80	G3/4	G1
ACP08EA600E2K	6.00	275	834	23.2	1445	25.4	90.4	80	G3/4	G1
ACP08EA700E2K	7.00	275	834	26.4	1664	25.4	90.4	80	G3/4	G1
ACP08EA800E2K	8.00	275	834	29.5	1883	25.4	90.4	80	G3/4	G1

Part number	**Effective gas Volume** (Litres)	**Max. Working Pressure** (PS) bar	**Max Flow Rate** l/mn***	**Weight (Kg)**	A	C	øD	ø Bore (Nomi-nal)	G (BSPP) Female	G (BSPP) Male
ACP10EA075E2K	0.70	275	1504	10.8	236	25.4	120.9	100	G1	G1
ACP10EA100E2K	0.95	275	1504	11.6	266	25.4	120.9	100	G1	G1
ACP10EA150E2K	1.50	275	1504	13.3	356	25.4	120.9	100	G1	G1
ACP10EA200E2K	2.00	275	1504	14.8	394	25.4	120.9	100	G1	G1
ACP10EA300E2K	3.00	275	1504	17.9	538	25.4	120.9	100	G1	G1
ACP10EA400E2K	4.00	275	1504	21	637	25.4	120.9	100	G1	G1
ACP10EA500E2K	5.00	275	1504	24.1	758	25.4	120.9	100	G1	G1
ACP10EA600E2K	6.00	275	1504	27.1	880	25.4	120.9	100	G1	G1
ACP10EA800E2K	8.00	275	1504	33.3	1123	25.4	120.9	100	G1	G1
ACP10EA1000E2K	10.00	275	1504	39.5	1365	25.4	120.9	100	G1	G1
ACP10EA1100E2K	11.00	275	1504	42.5	1488	25.4	120.9	100	G1	G1
ACP10EA1200E2K	12.00	275	1504	45.6	1633	25.4	120.9	100	G1	G1
ACP15EA300E1	3.00	275	3100	25.9	371	28.6	174.6	150	G1	G1
ACP15EA400E1	4.00	275	3100	29.2	430	28.6	174.6	150	G1	G1
ACP15EA500E1	5.00	275	3100	32.4	489	28.6	174.6	150	G1	G1
ACP15EA600E1	6.00	275	3100	35.7	548	28.6	174.6	150	G1	G1
ACP15EA700E1	7.00	275	3100	38.9	607	28.6	174.6	150	G1	G1
ACP15EA800E1	8.00	275	3100	42.2	665	28.6	174.6	150	G1	G1
ACP15EA4000E1	40.00	275	3100	146.1	2437	28.6	174.6	150	G1	G1

* No approvals - not for European use

** According PED 2014/68/EU Article 4.3

***Note : based on 120 in/sec maximum piston speed, port&fitting size will become limiting factors for most applications

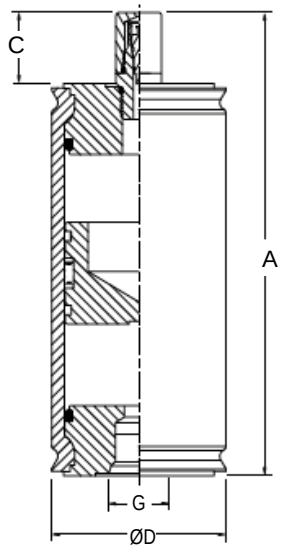

Tel: +45 63 12 83 00 | Email: ps@hymatik.com | www.hymatik.com | Hvidkaervej 27a, DK-5250 Odense SV, Denmark

ACP Series 275 bar(260 bar) , 0.02 to 40 Litres

ACP - Crimped Piston Accumulators without Gas Valve (code D) and Seals nitrile

Standard version (Carbon Steel shell/seal NBR) compatible with mineral oils (2).

According to PED 2014/68/EU, EN 14359, Fluid Group 2 (3).

Product , Part numbers, Accessories

Part number	Effective gas Volume (Litres)	Max. Working Pressure (PS) bar	Max Flow Rate l/mn	Weight (Kg)	A	C	øD	ø Bore	G (BSPP) Female	G (BSPP) Male
ACP04AD002R2K*	0.02	260	209	0.5	79	2.0	44.5	40	G3/8	G3/4
ACP04AD008R2K*	0.08	260	209	0.6	132	2.0	44.5	40	G3/8	G3/4
ACP04AD016R2K*	0.16	260	209	0.9	202	2.0	44.5	40	G3/8	G3/4
ACP04AD032R2K*	0.32	260	209	1.3	342	2.0	44.5	40	G3/8	G3/4
ACP04AD050R2K*	0.50	260	209	1.8	500	2.0	44.5	40	G3/8	G3/4
ACP04AD075R2K*	0.75	260	209	2.4	718	2.0	44.5	40	G3/8	G3/4
ACP05ED008E2K**	0.08	275	380	1.4	115	2.0	60.5	50	G3/4	G1
ACP05ED016E2K**	0.16	275	380	1.7	154	2.0	60.5	50	G3/4	G1
ACP05ED032E2K**	0.32	275	380	2.2	231	2.0	60.5	50	G3/4	G1
ACP05ED050E2K**	0.50	275	380	2.7	318	2.0	60.5	50	G3/4	G1
ACP05ED075E2K**	0.75	275	380	3.4	438	2.0	60.5	50	G3/4	G1
ACP05ED100E2K**	0.95	275	380	4	558	2.0	60.5	50	G3/4	G1
ACP05ED125E2K	1.25	275	380	4.9	679	2.0	60.5	50	G3/4	G1
ACP05ED150E2K	1.50	275	380	5.6	799	2.0	60.5	50	G3/4	G1
ACP05ED175E2K	1.75	275	380	6.4	919	2.0	60.5	50	G3/4	G1
ACP05ED200E2K	2.00	275	380	7.1	1040	2.0	60.5	50	G3/4	G1
ACP08ED025E2K	0.25	275	834	4.7	158	2.0	90.4	80	G3/4	G1
ACP08ED032E2K	0.32	275	834	4.9	173	2.0	90.4	80	G3/4	G1
ACP08ED050E2K	0.50	275	834	5.5	213	2.0	90.4	80	G3/4	G1
ACP08ED100E2K	0.95	275	834	6.9	311	2.0	90.4	80	G3/4	G1
ACP08ED150E2K	1.50	275	834	8.7	432	2.0	90.4	80	G3/4	G1
ACP08ED200E2K	2.00	275	834	10.3	541	2.0	90.4	80	G3/4	G1
ACP08ED250E2K	2.50	275	834	11.9	651	2.0	90.4	80	G3/4	G1
ACP08ED300E2K	3.00	275	834	13.5	761	2.0	90.4	80	G3/4	G1
ACP08ED400E2K	4.00	275	834	16.8	980	2.0	90.4	80	G3/4	G1
ACP08ED500E2K	5.00	275	834	19.9	1200	2.0	90.4	80	G3/4	G1
ACP08ED600E2K	6.00	275	834	23.1	1420	2.0	90.4	80	G3/4	G1
ACP08ED700E2K	7.00	275	834	26.3	1639	2.0	90.4	80	G3/4	G1
ACP08ED800E2K	8.00	275	834	29.4	1858	2.0	90.4	80	G3/4	G1

Part number	Effective gas Volume (Litres)	Max. Working Pressure (PS) bar	Max Flow Rate l/mn	Weight (Kg)	A	C	øD	ø Bore	G (BSPP) Female	G (BSPP) Male
ACP10ED075E2K	0.70	275	1504	10.7	211	2.0	120.9	100	G1	G1
ACP10ED100E2K	0.95	275	1504	11.5	241	2.0	120.9	100	G1	G1
ACP10ED150E2K	1.50	275	1504	13.2	331	2.0	120.9	100	G1	G1
ACP10ED200E2K	2.00	275	1504	14.7	369	2.0	120.9	100	G1	G1
ACP10ED300E2K	3.00	275	1504	17.8	513	2.0	120.9	100	G1	G1
ACP10ED400E2K	4.00	275	1504	20.9	612	2.0	120.9	100	G1	G1
ACP10ED500E2K	5.00	275	1504	24	733	2.0	120.9	100	G1	G1
ACP10ED600E2K	6.00	275	1504	27	855	2.0	120.9	100	G1	G1
ACP10ED800E2K	8.00	275	1504	33.2	1098	2.0	120.9	100	G1	G1
ACP10ED1000E2K	10.00	275	1504	39.4	1340	2.0	120.9	100	G1	G1
ACP10ED1100E2K	11.00	275	1504	42.4	1463	2.0	120.9	100	G1	G1
ACP10ED1200E2K	12.00	275	1504	45.5	1608	2.0	120.9	100	G1	G1
ACP15ED300E1	3.00	275	3100	25.7	350	28.6	174.6	150	G1	G1
ACP15ED400E1	4.00	275	3100	29	409	28.6	174.6	150	G1	G1
ACP15ED500E1	5.00	275	3100	32.2	468	28.6	174.6	150	G1	G1
ACP15ED600E1	6.00	275	3100	35.4	527	28.6	174.6	150	G1	G1
ACP15ED700E1	7.00	275	3100	38.7	586	28.6	174.6	150	G1	G1
ACP15ED800E1	8.00	275	3100	42	645	28.6	174.6	150	G1	G1
ACP15ED4000E1	40.00	275	3100	145.9	2534	28.6	174.6	150	G1	G1

* No approvals - not for European use

** According PED 2014/68/EU Article 4.3

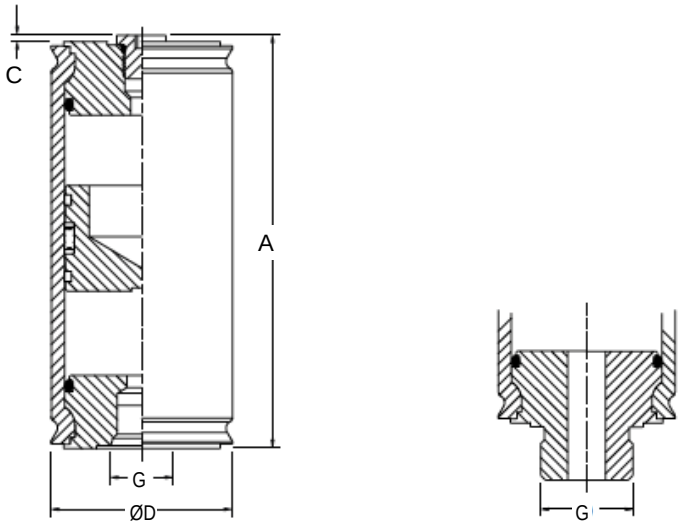

Notes

Tel: +45 63 12 83 00 | Email: ps@hymatik.com | www.hymatik.com | Hvidkaervej 27a, DK-5250 Odense SV, Denmark





aerospace
climate control
electromechanical
filtration
fluid & gas handling
hydraulics
pneumatics
process control
sealing & shielding





A Series
Piston Accumulators

0.5 to 300 Litres, 250 and 350 bar



Parker OLAER

ENGINEERING YOUR SUCCESS.

Description

Piston Accumulators up to 80 Litres volume, 200mm Bore, 250 Bar & 350 Bar.Parker A series piston accumulators offer quality design and premium technical features which guarantee optimum performance life.

Premium quality design and technical features guarantee optimum performance and service life from every model, while differing wall thicknesses to suit 250 or 350 bar working pressures allow the designer to specify precisely the right performance envelope for the application.

Parker Olaer have developed very sophisticated simulation software to optimize sizing recommendations for hydraulic accumulators. You can download the accumulator sizing software from www.Parker.com/acde.

Features/Benefits

- **Effective heat dissipation is vital for long seal life. Compact, rugged steel shell and end caps allow heat to dissipate efficiently, while the bore of the accumulator is micro-finished to maximise seal life.**
- **Rapid response in high cycling applications is assured by Parker's lightweight piston design. The dished profile of the aluminium piston gives extra gas capacity while maintaining stability in the bore, and permits a greater usable volume of fluid. Piston position sensors, available as an optional feature, enable the condition of the accumulator's precharge to be monitored.**
- **Long service intervals are made possible by total separation of oil and gas, even under the most severe operating conditions. Downtime is minimised by the use of threaded caps to simplify maintenance of the accumulator, permitting quick and easy installation of seals.**
- **Parker's A series piston accumulators feature a wide piston seal assembly comprising a unique five-bladed V-profile O-ring with back-up washers, which eliminates seal roll-over even in high speed applications. The V-O-ring holds full pressure throughout long idle periods between cycles, providing dependable, full pressure storage of hydraulic energy.**
- **Enhanced nitrogen gas retention.**
- **High cycle rates and high flow rates.**
- **Designed for long life – non sudden failure.**

Markets

- **Industrial**
- **Oil & Gas**
- **Energy**

Applications

- **Die casting**
- **Industrial Hydraulic Power Units**
- **Machine Tools**
- **Automotive**
- **Marine & Offshore**
- **Wind Energy**
- **Transport Rail & Truck**
- **Mobile Construction & Agriculture**
- **Construction Equipment**

Main Features

Actual Bore Sizes & Maximum Flow Rates

Model	Pressure	Nominal Bore ø	Actual Bore ø	Max. Recommended Flow Rate*
	bar	mm	mm	l/m
A2	250/350	50	51.4	380
A3	250/350	75	76.2	825
A4	250/350	100	102.4	1500
A5	250	125	127	2200
A6	250/350	150	146.9	3100
A8	250	200	200	5700

*Note: Based on 4m/sec maximum piston speed, port & fitting size will become limiting factors for most applications.

250 and 350 Bar Pressure Ranges

A Series accumulators are available to suit maximum working pressures of 250 and 350 bar. The same premium quality design and technical features guarantee optimum performance and service life from every model, while differing wall thicknesses to suit 250 or 350 bar working pressures allow the designer to specify precisely the right performance envelope for the application.

Materials

- Shell – high strength steel
- End caps – steel
- Pistons – lightweight aluminium alloy
- Cast iron low temperature Arctic piston available upon request
- Piston and end cap seals – NBR (standard): other compounds to suit application
- Piston seal backup washers – PTFE
- Piston bearing rings – PTFE
- Gas valve assembly – stainless steel
- Gas valve protector – steel
- Paint finish – black primer (standard – others on request)

Custom Designs

For unique applications and hostile environments, different designs, materials and coatings can be supplied. Please contact our engineering department to discuss custom solutions to individual application requirements.



Tel: +45 63 12 83 00 | Email: ps@hymatik.com | www.hymatik.com | Hvidkaervej 27a, DK-5250 Odense SV, Denmark

Available Options

A wide variety of options are available for A Series accumulators, including:

- Threaded and manifold port styles and sizes
- Seal compounds
- Metric and inch mounting styles
- High flow gas ports for use with remote gas storage bottles
- Water service versions
- Gas valves
- Safety fuses
- Accumulator mounting systems
- Precharge monitors and piston position sensors
- Certifications to suit different market requirements

Water Service

A Series piston accumulators are available for use with water as the fluid medium. Modifications include plating of all working surfaces. Please consult Parker for details.

Operating Temperatures, Seals and Fluids

A Series piston accumulators are fitted as standard with nitrile (NBR) seals. A range of alternative seal materials is available for use at higher or lower temperatures, or with synthetic or high water content fluids, as shown in the table. Other seals are also available for use in exceptional conditions – please consult the factory with details of the application. The shells of Parker's A series accumulators are CE approved for operation at temperatures between -40°C and +150°C.

Filtration

For maximum component life, the system should be protected from contamination by effective filtration. Fluid cleanliness should be in accordance with ISO 4406. The quality of filters should be in accordance with the appropriate ISO standards. The rating of the filter media depends on the system components and the application. The minimum required for hydraulic systems should be class 19/15 to ISO 4406, which equates to 25µ (ß10≥75) to ISO 4572.

Safety

Charging must be carried out by qualified personnel. Before taking any readings or pressurizing with nitrogen, the accumulator must be isolated from the hydraulic system and the fluid side discharged in order to depressurize it. Use only nitrogen (N_2) to pressurize the accumulator.

Danger of Explosion – Never Charge with Oxygen

The types of nitrogen permitted are: type S (99.8% pure); type R (99.99% pure); type U (99.993% pure).

Approvals

Approvals	A2	A3	A4	A5	A6	A8
PED 2014/68/EU	•	•	•	•	•	•
CRN	•	•	•	•	•	•

Other approvals available upon request.

Mounting

The optimum mounting orientation is vertical however angled and horizontal mountings are permissible if the hydraulic fluid is kept clean; high levels of contaminants in the fluid can result in uneven or accelerated seal wear.

Gas Valves

The standard gas charging valve fitted to A Series 250 and 350 bar piston accumulators is a cored-type gas valve, rated at 350 bar. A mechanically opened and closed poppet-type gas valve cartridge, also rated at 350 bar, is available as an option.

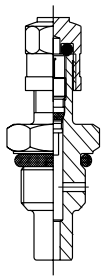

Standard Cored-Type Gas Valve

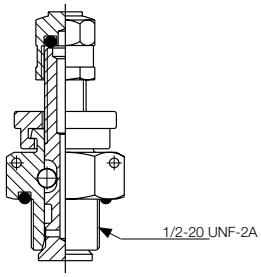

Optional Poppet-Type Gas Valve

Both types of charging valve may be used with the Charging and Gauging Kit.

Safety Fuses (Burst Discs)

Safety fuses are available on A Series accumulators to prevent over-pressurization of gas due to external heat or excess hydraulic pressure. They comprise a housing incorporating a disc which is calibrated to rupture at a pre-determined pressure, to be specific by the customer at the time of ordering. Please contact the factory for further information.

Tel: +45 63 12 83 00 | Email: ps@hymatik.com | www.hymatik.com | Hvidkaervej 27a, DK-5250 Odense SV, Denmark

Available Options

If your application requires a piston accumulator, gas bottle, or special option that falls outside of Parker's broad offering, consult your local distributor, Parker representative, or the factory with your specific requirements. Parker has the manufacturing and engineering expertise to design and build piston accumulators to your exacting requirements, from simple modifications of standard units to complete designs. Some example of Parker's past special designs include:

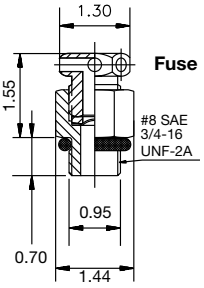

- High Pressures
- Special and Stainless Steel Materials
- Piston Position and Velocity Sensors and Switches
- Water Service
- Non-Standard Capacities
- Extreme Temperatures

Bore Size, Pressures & Temperature Range

Bore Size (mm)	Max. Working Pressure (bar)	Volume (Litres)	
		Min	Max
A2	250/350	0.08	2
A3	250/350	0.25	8
A4	250/350	0.7	12
A5	250	2	14
A6	250/350	3.8	38
A8	250	9.5	76

Piston Accumulator Seal Kits

Seal kits are available for all A Series accumulator models however it is recommended to buy a piston assembly with seal already assembled.

When ordering seal kits, please supply the complete model number from the identification plate and specify the fluid type and the temperature at which the accumulator is to be used.

Seal Kit Numbers

The seal kits listed contain items 5, 6, 7, 8, 9 and 11.

Parts List

1. Shell
2. Hydraulic cap
3. Gas cap
4. Piston
5. V-O-ring
6. V-O-ring back-up washers
7. PTFE bearing ring (piston)
8. O-ring
9. O-ring back-up washer
10. Gas valve
11. Gas valve O-ring
12. Gas valve protector
13. Gas valve protector screw

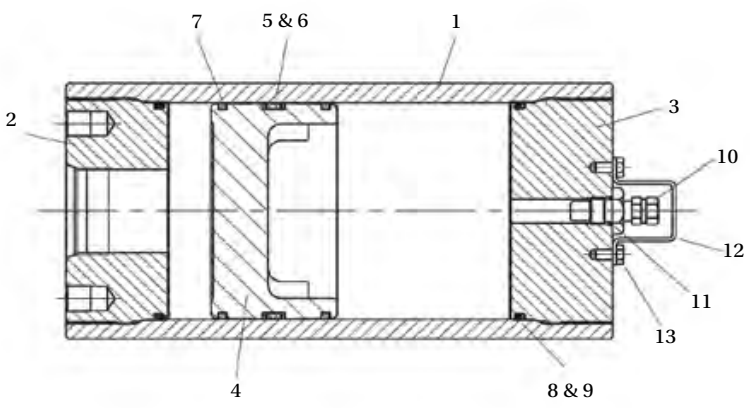

Seal Kit Part Numbers with piston seals assembled

Model	Nitrile NBR Code K	Fluorocarbon Elasto-mer FPM Code E	Ethylene Propylene EPR Code D	Hydrogenated Nitrile HNBR Code H	Carboxilated Nitrile XNBR Code J	Low Temp. Nitrile NBR CODE Q
Model	Part Number	Part Number	Part Number	Part Number	Part Number	Part Number
A2	RK0200K000	RK0200E000	RK0200D000	RK0200H000	RK0200J000	RK0200Q000
A3	RK0300K000	RK0300E000	RK0300D000	RK0300H000	RK0300J000	RK0300Q000
A4	RK0400K000	RK0400E000	RK0400D000	RK0400H000	RK0400J000	RK0400Q000
A5	RK0500K000	RK0500E000	RK0500D000	RK0500H000	RK0500J000	RK0500Q000
A6	RK0600K000	RK0600E000	RK0600D000	RK0600H000	RK0600J000	RK0600Q000
A8	RK0800K000	RK0800E000	RK0800D000	RK0800H000	RK0800J000	RK0800Q000

A Series: How to order

Series	Model	Type of Construction	Options	Volume Capacity	Working Pressure	Design Number	Seal Type	Port Size	Gas Port	Pre-Charge
A	4	E	S	0005	L	2	K	RF	S	/ 010

A	Series Accumulator
B	Bottle

Code	Bore Size (nominal)
2	50 A Series
3	75 A Series
4	100 A Series
5	127 A Series
6	150 A Series
8	200 A Series

Code	Approval Type
E	CE approved1

Code	Valve Options
S	Cored-type gas valve (standard) [2]
W	Cored-type gas valve + water service
F	Cored-type gas valve + safety fuse
G	Cored-type gas valve + water service + safety fuse
M	Poppet-type gas valve
L	Poppet-type gas valve + water service
P	Poppet-type gas valve + safety fuse
R	Poppet-type gas valve + water service + safety fuse

Please see Dimensions table on page 128

Code	Maximum Working Pressure [3]
L	250 bar (A2, A3, A4, A5, A6 & A8)
H	350 bar (A2, A3, A4, A6)

Code	Port
1	Inch mounting + SAE port
2	Metric mounting + BSPP port (standard)
3	Special ports
###	Specials (Parker assigned number)

Code	Service/Fluid
K	Nitrile (NBR)
E	Fluorocarbon Elastomer (FPM)
H	Hydrogenated nitrile (HNBR)
D	Ethylene Propylene (EPR)

Code	Service/Fluid
J	Carboxilated nitrile (XNBR)
Q	Low temperature nitrile
S	Special – please specify

Please see Fluid Port tables on page 127 (leave blank if standard)

Gas Port
Specification (where no valve supplied)

[1] Other approvals are available to order – please consult the factory.
[2] Where a gas port is specified, no gas valve will be supplied.
[3] For other pressure ratings, please consult the factory.

Hydraulic and Gas Port Modifications

For accumulators with non-standard ports, specify special gas and/or hydraulic ports and use the appropriate port code from page 127. A typical model number for an accumulator with ISO 6149 hydraulic and gas ports would be: A - 3 - T - M - 0090 - D - 2 - K - YE/YE

Code	Pre-Charge (for example)	Code	Pre-Charge (for example)
010	10 bar	020	20 bar

Port Options

Fluid Ports - Standard

Port Type	Code	A2		A3		A4		A5	A6		A8
		250 bar	350 bar	250 bar	350 bar	250 bar	350 bar	250 bar	250 bar	350 bar	250 bar
G 3/4 BSPP	**Leave Blank**	•	•	•	•						
G 1 BSPP	**Leave Blank**					•	•	•		•	
G 1 1/2 BSPP	**Leave Blank**								•		
G 2 BSPP	**Leave Blank**										•

Optional Threaded Ports

BSPP [1]			Metric to DIN 3852-1			Metric to ISO 6149-1			SAE Thread		
Thread Size	**From Model**	**Code**	**Thread Size**	**From Model**	**Code**	**Thread Size**	**From Model**	**Code**	**Thread Size**	**From Model**	**Code**
G 3/4	A2	**RC**	M14	A2	**GA**	M14	A2	**YA**	#5	A2	**TA**
G 1	A3	**RD**	M18	A2	**GB**	M18	A2	**YB**	#6	A2	**TB**
G 1 1/4	A3	**RE**	M22	A2	**GC**	M22	A2	**YC**	#8	A2	**TC**
G 1 1/2	A4	**RF**	M27	A2	**GD**	M27	A2	**YD**	#10	A2	**TI**
G 2	A4	**RG**	M33	A3	**GE**	M33	A3	**YE**	#12	A2	**TD**
-	-	**-**	M42	A3	**GF**	M42	A3	**YF**	#16	A3	**TE**
-	-	**-**	-	-	**-**	-	-	**-**	#20	A3	**TF**
-	-	**-**	-	-	**-**	-	-	**-**	#24	A3	**TG**

[1] Where the required fluid port is the standard BSPP size for the accumulator bore diameter chosen (see dimension D, page 128), the fluid port field in the order code on page 126 should be left blank.

Optional Flanged Ports

A Series Piston Accumulators are available with metric flange ports to ISO 6162/3000 psi and ISO 6164/6000 psi as shown in the tables. Inch pattern flange ports and flange ports for higher pressure operation are also available, please consult the factory for details.

Flange Ports to ISO 6162/3000 psi						
Flange Size	**From Model**	**A ***	**B ± 0.25**	**C ± 0.25**	**F**	**Code**
DN13	A3	M8	17.5	38.1	13	**MT**
DN19	A3	M10	22.3	47.6	19	**MU**
DN25	A3	M10	26.2	52.4	25	**MV**
DN32	A3	M10	30.2	58.7	32	**MW**
DN38	A4	M12	35.7	69.9	38	**MJ**
DN51	A4	M12	42.9	77.8	51	**ML**
DN64	A6	M12	50.8	88.9	64	**MM**
DN76	A8	M16	61.9	106.4	76	**MN**

ISO 6162 Flanged Port Dimensions

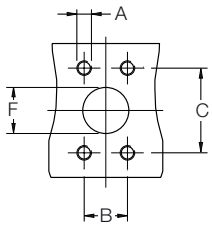

ISO 6164 Flanged Port Dimensions

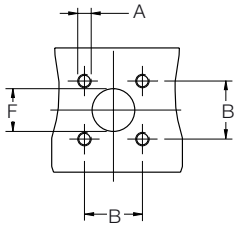

Flange Ports to ISO 6164/6000 psi					
Flange Size	**From Model**	**A**	**B ± 0.25**	**F +0.0 -1.5**	**Code**
DN10	A2	M6 x 1	24.7	10.0	**SD**
DN13	A2	M8 x 1.25	29.7	13.0	**SE**
DN19	A3	M8 x 1.25	35.4	19.0	**SF**
DN25	A3	M10 x 1.5	43.8	25.0	**SG**
DN32	A3	M12 x 1.75	51.6	32.0	**SH**
DN38	A4	M16 x 2	60.1	38.0	**SP**
DN51	A6	M16 x 2	69.3	51.0	**SQ**
DN56	A6	M20 x 2.5	83.4	56.0	**SX**

A Series 250 bar, Volume 0.5 to 300 Litres

Standard version (Carbon Steel shell/seal NBR) compatible with mineral oils (2).
According to PED 2014/68/EU, EN 14359, Fluid Group 2 (3).

Part number	Model	Code	Bore ø	Fluid Volume	Gas Volume Litres	250 bar Maxi Weight Kg	350 bar Maxi Weight Kg	250 bar			350 bar			C mm	E2	F mm	L mm
								øD mm	A mm	G BSPP	øD mm	A mm	G BSPP				
A2ES0045L2K*	A2	0005	51.4	0.10	0.10	18	27	61	172	G 3/4	64	172	G 3/4	27 (1)	-	-	-
A2ES0010L2K*		0010		0.15	0.20	2	3		211			211					
A2ES0015L2K*		0015		0.25	0.25	25	33		250			250					
A2ES0029L2K*		0029		0.50	0.50	3	43		360			360					
A2ES0058L2K*		0058		1.00	1.00	44	62		590			590					
A3ES0029L2K*	A3	0029	76.2	0.50	0.55	9	9	91	260	G 3/4	96	260	G 3/4	29 (1)	M10	60	15
A3ES0058L2K*		0058		1.00	1.00	11	11		364			364					
A3ES0090L2K		0090		1.50	1.50	13	13		481			481					
A3ES0116L2K		0116		2.00	2.00	14	15		573			573					
A3ES0183L2K		0183		3.00	3.00	16	20		814			814					
A4ES0058L2K	A4	0058	102.4	1.00	1.10	15	18	121	295	G 1	127	306	G 1	29 (1)	M12	82	18
A4ES0116L2K		0116		2.00	2.00	18	22		411			422					
A4ES0231L2K		0231		3.80	4.00	23	30		640			651					
A4ES0347L2K		0347		5.70	5.90	29	38		872			883					
A4ES0578L2K		0578		9.50	9.60	41	54		1330			1341					
A5ES0058L2K	A5	0058	127.0	1.00	1.30	22	-	153	272	G 1	-	-	-	29 (1)	M12	100	18
A5ES0116L2K		0116		2.00	2.20	26			346								
A5ES0231L2K		0231		3.80	4.10	32			496								
A5ES0347L2K		0347		5.70	6.00	39			645								
A5ES0578L2K		0578		9.50	9.80	52			943								
A6ES0231L2K	A6	0231	146.9	3.80	4.30	35	53	175	442	G 1 1/2	180	487	G 1	29 (1)	M12	110	18
A6ES0347L2K		0347		5.70	6.20	42	60		554			600					
A6ES0578L2K		0578		9.50	10.00	54	74		778			824					
A6ES0924L2K		0924		15.00	15.70	73	96		1113			1159					
A6ES1155L2K		1155		19.00	19.40	85	110		1337			1383					
A6ES1733L2K		1733		28.50	28.90	112	148		1896			1941					
A6ES2310L2K		2310		38.00	38.40	147	183		2454			2500					
A8ES0578L2K	A8	0578	200.0	9.50	10.70	98	-	230	629	G 2	-	-	-	42	M16	170	24
A8ES1155L2K		1155		19.00	20.20	122			931								
A8ES1733L2K		1733		28.50	29.70	146			1232								
A8ES2310L2K		2310		38.00	39.10	170			1532								
A8ES2772L2K		2772		45.00	46.20	189			1774								
A8ES2888L2K		2888		47.00	48.20	194			1834								
A8ES3465L2K		3465		57.00	58.00	217			2136								
A8ES4620L2K		4620		76.00	77.20	266			2738								

* According PED 2014/68/EU Article 4.3
(1) Where the optional poppet-type gas valve is fitted, dimension C should be increased by 13 mm
A Series Piston accumulator are supplied as standard with the metric threaded mounting holes shown in the table. They are also available with inch pattern mounting holes, indicated by the design number in the model code
Volumes are nominal
ΔP type includes Heavy duty Gas valve
(2) For other fluids consult Parker (3) For Fluid group 1 consideration : consult Parker

Tel: +45 63 12 83 00 | Email: ps@hymatik.com | www.hymatik.com | Hvidkaervej 27a, DK-5250 Odense SV, Denmark

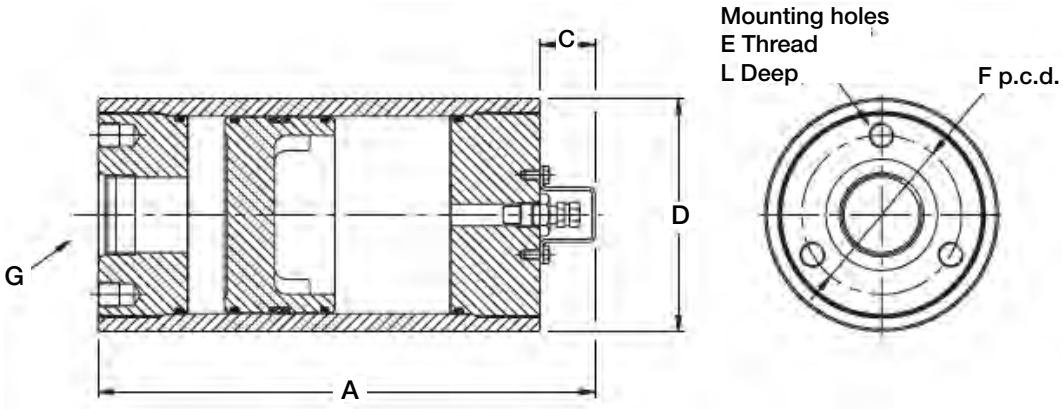

Seals, Fluids and Temperature Ranges

Code	Seal Type	"Min Temp"	"Max Temp"	"Fluid Classification"	"Fluid Type"	Maximum Velocity (m/s)
K	"NBR (Nitrile)"	-29°C	74°C	"HFB-HFC HM-HV"	"Mineral Oils & Water Glycols"	4 m/s
H	"HNBR (Hydrogenated Nitrile)"	-32°C	150°C	"HFB-HFC HM-HV"	"Mineral Oils & Water Glycols"	4 m/s
E	"FPM (Fluorocarbon elastomer)"	-23°C	121°C	"HFB HM-HV"	"Synthetic Oils"	4 m/s
D	"EPDM (Ethylene Propylene)"	-40°C	121°C	HFD	"Ester Fluids"	4 m/s
Q	"LT-NBR (Low Temperature Nitrile)"	-45°C	71°C	HM-HV	"Mineral Oils"	4 m/s
X	"Low Friction T Seal Consult Parker ACDE"	-43°C	121°C	HM-HV	"Mineral Oils & Water Glycols"	4 m/s
S	"Special Consult Parker ACDE"					4 m/s

Tel: +45 63 12 83 00 | Email: ps@hymatik.com | www.hymatik.com | Hvidkaervej 27a, DK-5250 Odense SV, Denmark

'U' Bolts for Piston Accumulators

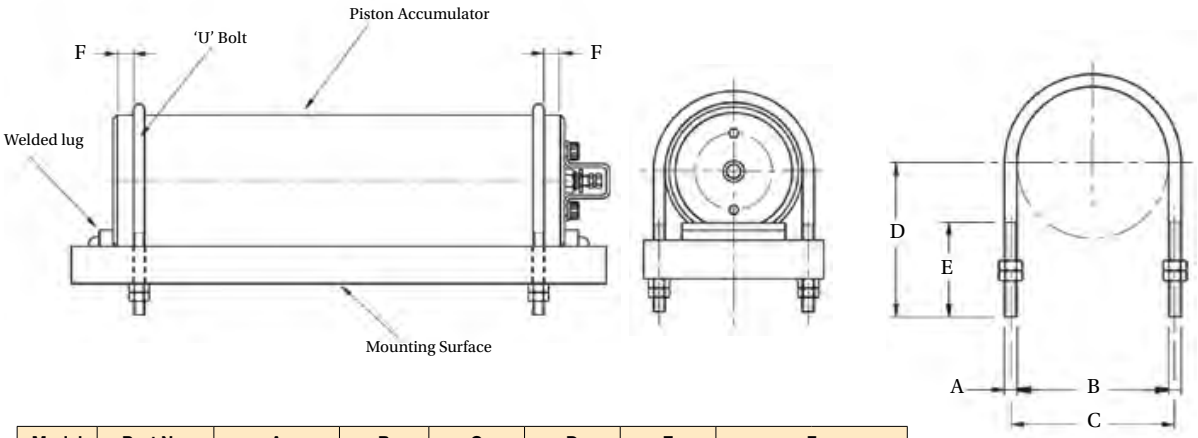

Model	Part No.	A	B	C	D	E	F	
							Min	Max
A2	PE1093-4	M6 x 1	62	68	70	45	10	25
A3	PE1093-1	M8 x 1.25	96	104	92	60	10	25
A4	PE1093-2	M12 x 1.75	128	140	114	76	10	30
A5	PE1093-12	M12 x 1.75	158	170	140	76	15	40
A6	PE1093-3	M16 x 2	180	196	155	95	20	45
A8	PE1093-13	M16 x 2	234	250	200	95	20	50

Note: 'U' bolts should be mounted within the distances shown from the end of the accumulator, to avoid deformation of the shell.

Charging and Gauging

The charging and gauging assemblies listed in the table are suitable for use with both the standard cored-type gas valve and the optional poppet type. Each kit contains a UCA assembly incorporating a gas valve, bleed valve and gas chuck, and a 3m long charging hose with standard nitrogen bottle fittings. The kit includes 25 bar and 250 bar pressure gauges, to permit easy monitoring of the gas precharge.

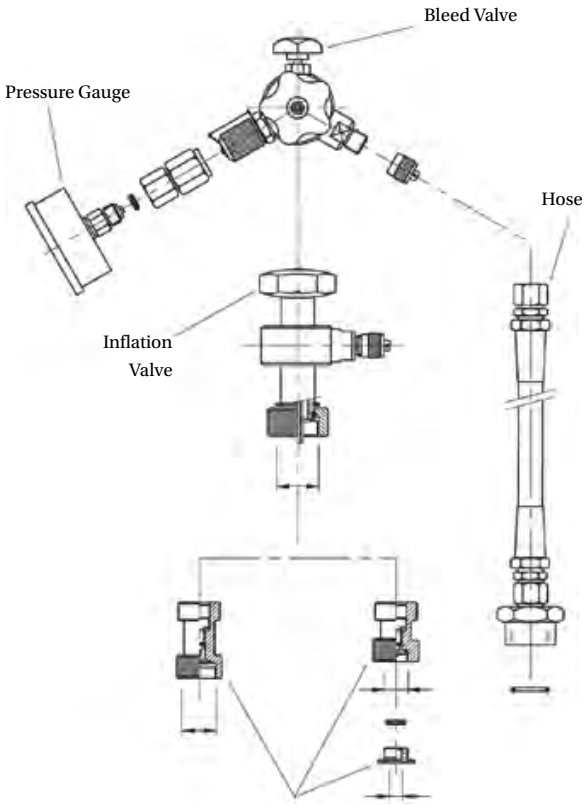

Territory	Gas Bottle Fitting	Part No.
UK	5/8 BSP (male)	UCA 02
France	W 21.7 x 1/14" (female)	UCA 04
Germany	W 24.32 x 1/14" (female)	UCA 01
Italy	W 21.7 x 1/14" (male)	UCA 05
US	0.960 x 1/14" (male)	UCA 03
Universal	All available fittings (includes all fittings above)	UCA UNI

All dimensions are in millimetres unless otherwise stated.

Please note:
Resistant parts cannot be supplied as spares (tubes/ end caps)

Tel: +45 63 12 83 00 | Email: ps@hymatik.com | www.hymatik.com | Hvidkaervej 27a, DK-5250 Odense SV, Denmark





aerospace
climate control
electromechanical
filtration
fluid & gas handling
hydraulics
pneumatics
process control
sealing & shielding





AP Series
Piston Accumulators

6 to 300 Litres, 250 & 350 Bar



Parker OLAER

ENGINEERING YOUR SUCCESS.

Description

Piston Accumulators up to 300 Litres volume, 360mm Bore, 250 Bar & 350 Bar.Parker AP piston accumulators offer quality design and premium technical features which guarantee optimum performance life.

Parker's AP piston accumulators are a premium specification product designed for use in high performance applications such as industrial press, die casting and plastic injection moulding, where large volumes of fluid have to be displaced at high speed (250 & 350 bar).

A wide range of bore/stroke combinations enables the piston accumulator with the required volume to be selected in a size that will optimise the use of available space, while metric mountings and a choice of port styles simplify connection. Parker offers a full range of clamps to provide secure mounting.

Parker Olaer have developed very sophisticated simulation software to optimize sizing recommendations for hydraulic accumulators. You can download the accumulator sizing software from www.Parker.com/acde.

Features/Benefits

- **Special multi-element sealing systems have been developed to combine good servo application and load holding properties with the wear characteristics required to withstand continuous use at piston speeds of up to 8m/s.**
- **For unique applications and hostile environments, different designs, materials and coatings can be supplied. Please contact your local Parker sales company to discuss custom solutions to individual application requirements.**
- **180mm and 250mm bore accumulators feature threaded caps to minimize downtime and simplify maintenance of the accumulator, permitting quick and easy installation of seals. 360mm bore units use a screwed ring to retain the gas and oil caps, reducing the mass of parts handled during maintenance and providing additional protection for the gas valve.**
- **Carbon steel body and Aluminium piston design.**
- **High burst test safety factor.**

Markets

- **Industrial**
- **Oil & Gas**
- **Energy**

Applications

- **Die casting**
- **Plastic injection moulding**
- **Presses**
- **Machine tools**
- **Renewable energy**

Applications

Ideal for die casting and plastic injection moulding

AP Series Piston Accumulators

Parker's AP Series accumulators are a premium specification product designed for use in high performance applications such as die casting and plastic injection moulding, where large volumes of fluid have to be displaced at high speed. Special multi-element sealing systems have been developed to combine good servo application and load holding properties with the wear characteristics required to withstand continuous use at piston speeds of up to 8m/s.

A wide range of bore/stroke combinations enables an accumulator with the required volume to be selected in a size that will optimise the use of available space, while metric mountings and a choice of port styles simplify connection. Parker offers a full range of clamps to provide secure mounting.







Main Features

Actual Bore Sizes & Maximum Flow Rates

Model	Actual Bore ø	Max. Recommended Flow Rate*
	mm	l/m
AP180	180	12,000
AP250	250	23,000
AP360	360	45,000

Materials

- Shell – high strength steel
- End caps – steel
- Pistons – lightweight aluminium alloy
- Cap end seals – NBR (standard): other compounds to suit application
- Piston bearing rings – filled PTFE
- Piston seals – filled PTFE (standard): other compounds to suit application
- Gas valve assembly – stainless steel
- Gas valve protector – steel
- Paint finish – black primer, suitable for epoxy paint finishes (standard) – other finishes on request

Custom Designs

For unique applications and hostile environments, different designs, materials and coatings can be supplied. Please contact our engineering department to discuss custom solutions to individual application requirements.

Tel: +45 63 12 83 00 | Email: ps@hymatik.com | www.hymatik.com | Hvidkaervej 27a, DK-5250 Odense SV, Denmark

AP Series: How to order

Series	Model	Type of Construction	Options	Capacity	Working Pressure	Design Number	Seal Type	Port Size	Gas Port	Pre-Charge
AP	250	E	M	080	L	2	K	RF	S	/ 010

AP Series Accumulator
B Bottle

Code	Bore Size (nominal)
180	180 mm bore
250	250 mm bore
360	360 mm bore

Code	Approval Type
E	According to PED 2014/68/EU (From 07/2016 PED 97/23/EC becomes PED 2014/68/EU)

Code	Valve Options
M	Poppet-type gas valve
L	Poppet-type gas valve + water service
P	Poppet-type gas valve + safety fuse
R	Poppet-type gas valve + water service + safety fuse

Code	Capacity	Model
006	6.0	AP180 only
008	8.0	AP180 only
010	10	AP180 only
015	15	AP180 only
020	20	AP180 only
025	25	AP180 only
030	30	AP180 & AP250
040	40	AP180 & AP250

Code	Capacity	Model
050	50	AP180 & AP250
060	60	AP180 & AP250
080	80	AP180 & AP250
100	100	AP250 & AP360
150	150	AP250 & AP360
200	200	AP360 only
250	250	AP360 only
300	300	AP360 only

Code	Maximum Working Pressure [3]
L	250 bar
H	350 bar

Code	Port
2	Metric mounting + BSPP port (standard)
###	Specials (Parker assigned number)

Please see Seals table on page 137

Please see Fluid Port tables on page 135

Gas Port
Specification (where no valve supplied)

[1] Other approvals are available to order – please consult the factory.
[2] Where a gas port is specified, no gas valve will be supplied.
[3] For other pressure ratings, please consult the factory.

Hydraulic and Gas Port Modifications

For accumulators with non-standard ports, specify special gas and/or hydraulic ports and use the appropriate port code from page 135. A typical model number for an accumulator with ISO 6149 hydraulic and gas ports would be: A - 3 - T - M - 0090 - D - 2 - K - YE/YE

Code	Pre-Charge (for example)
010	10 bar
020	20 bar

Hydraulic and Gas Ports

The BSPP ports shown are supplied as standard at the fluid ends of AP Series 250 bar accumulators, and at the gas ends of these accumulators when ordered for use with gas bottles. A range of optional threaded and flanged ports is also available, as shown below. All ports are specified by adding the relevant code to the accumulator model number.

BSPP Threaded Ports

Thread Size	From Model	Code
G1	All models	RD
G1 1/4		RE
G1 1/2 (standard)		RF
G2		RG

Optional Flanged Ports

Bore Ø	ISO Port Style	DN10	DN13	DN19	DN25	DN32	DN38	DN51	DN56	DN63	DN70	DN80
180	ISO 6162		•	•	•	•	•	•				
	ISO 6164	•	•	•	•	•	•	•	•	•		
250	ISO 6162		•	•	•	•	•	•				
	ISO 6164	•	•	•	•	•	•	•	•	•	•	•
360	ISO 6162		•	•	•	•	•	•				
	ISO 6164	•	•	•	•	•	•	•	•	•	•	•

Optional Flanged Ports

AP Series Piston Accumulators are available with metric flange ports to ISO 6162/3000 psi and ISO 6164/6000 psi as shown in the tables. Inch pattern flange ports and flange ports for higher pressure operation are also available, please consult the factory for details.

ISO 6162 Flanged Port Dimensions

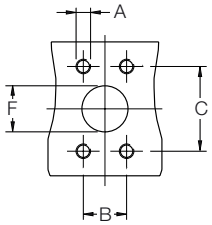

ISO 6164 Flanged Port Dimensions

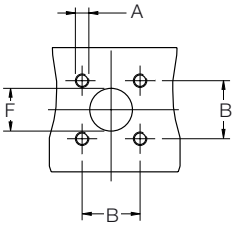

Flange Ports to ISO 6162/3000 psi						
Flange Size	From Model	A *	B ± 0.25	C ± 0.25	F	Code
DN13	180	M8	17.5	38.1	13	MT
DN19	180	M10	22.3	47.6	19	MU
DN25	180	M10	26.2	52.4	25	MV
DN32	180	M10	30.2	58.7	32	MW
DN38	180	M12	35.7	69.9	38	MJ
DN51	180	M12	42.9	77.8	51	ML
DN64	180	M12	50.8	88.9	64	MM
DN76	180	M16	61.9	106.4	76	MN

Flange Ports to ISO 6164/6000 psi					
Flange Size	From Model	A	B ± 0.25	F +0.0 -1.5	Code
DN10	180	M6 x 1	24.7	10.0	SD
DN13	180	M8 x 1.25	29.7	13.0	SE
DN19	180	M8 x 1.25	35.4	19.0	SF
DN25	180	M10 x 1.5	43.8	25.0	SG
DN32	180	M12 x 1.75	51.6	32.0	SH
DN38	180	M16 x 2	60.1	38.0	SP
DN51	180	M16 x 2	69.3	51.0	SQ
DN56	180	M20 x 2.5	83.4	56.0	SX
DN63	180	M24 x 3	102.5	63.0	SR
DN70	250	M24 x 3	113.1	70.0	SY
DN80	250	M30 x 3.5	123.7	80.0	SZ

AP Series 250 & 350 bar, Volume 6 to 300 Litres

Standard version (Carbon Steel shell/seal NBR) compatible with mineral oils (2).
According to PED 2014/68/EU, EN 14359, Fluid Group 2 (3).
Product , Part numbers, Accessories

Technical characteristics									Serie 250 Bar			Serie 350 Bar		
Model	**Bore** (mm)	**Nominal Volume** (Litres)	**A**	**C**	**E**	**G" Port BSPP**	**F**	**L**	**Part number**	**Weight** (KG)	**ø D** (mm)	**Part number**	**Weight** (KG)	**ø D** (mm)
AP180	180	6	591	42	M16x2	G1.1/2	140	20	AP180EM006L2K	83	207	AP180EM006H2K	102	220
	180	8	669			G1.1/2			AP180EM008L2K	88		AP180EM008H2K	109	
	180	10	748			G1.1/2			AP180EM010L2K	93		AP180EM010H2K	117	
	180	15	944			G1.1/2			AP180EM015L2K	106		AP180EM015H2K	136	
	180	20	1141			G1.1/2			AP180EM020L2K	118		AP180EM020H2K	155	
	180	25	1337			G1.1/2			AP180EM025L2K	131		AP180EM025H2K	175	
	180	30	1534			G1.1/2			AP180EM030L2K	143		AP180EM030H2K	194	
	180	40	1927			G1.1/2			AP180EM040L2K	168		AP180EM040H2K	232	
	180	50	2320			G1.1/2			AP180EM050L2K	193		AP180EM050H2K	270	
	180	60	2713			G1.1/2			AP180EM060L2K	218		AP180EM060H2K	309	
	180	80	3499			G1.1/2			AP180EM080L2K	268		AP180EM080H2K	385	
AP250	250	30	1041	42	M22x2.5	G1.1/2	170	30	AP250EM030L2K	245	290	AP250EM030H2K	317	310
	250	40	1245			G1.1/2			AP250EM040L2K	271		AP250EM040H2K	359	
	250	50	1449			G1.1/2			AP250EM050L2K	298		AP250EM050H2K	401	
	250	60	1652			G1.1/2			AP250EM060L2K	325		AP250EM060H2K	442	
	250	80	2060			G1.1/2			AP250EM080L2K	379		AP250EM080H2K	526	
	250	100	2467			G1.1/2			AP250EM100L2K	432		AP250EM100H2K	609	
	250	150	3486			G1.1/2			AP250EM150L2K	566		AP250EM150H2K	817	
AP360	360	100	1657 (1)	N/A	M22x2.5	G1.1/2	304	45	AP360EM100L2K	639	407	AP360EM100H2K	903	436
	360	150	2149 (1)			G1.1/2			AP360EM150L2K	742		AP360EM150H2K	1083	
	360	200	2640 (1)			G1.1/2			AP360EM200L2K	845		AP360EM200H2K	1264	
	360	250	3131 (1)			G1.1/2			AP360EM250L2K	948		AP360EM250H2K	1445	
	360	300	3622 (1)			G1.1/2			AP360EM300L2K	1051		AP360EM300H2K	1626	

AP type includes Heavy duty Gas Valve

Flange mounting surface on AP360 series extends 2 mm beyond shell

(2) For other fluids consult Parker

(3) For Fluid group 1 consideration : consult Parker

250 Bar and 350 Bar
AP Series
180mm and 250mm Bore
with CE Approval

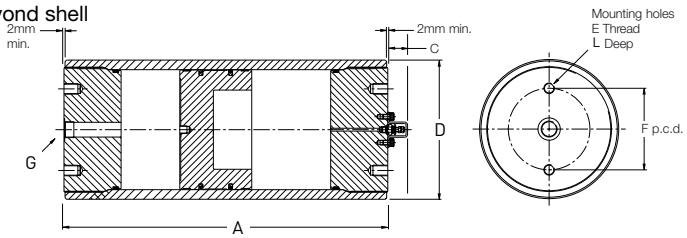

250 Bar and 350 Bar
AP Series
250mm and 360mm Bore
with CE Approval

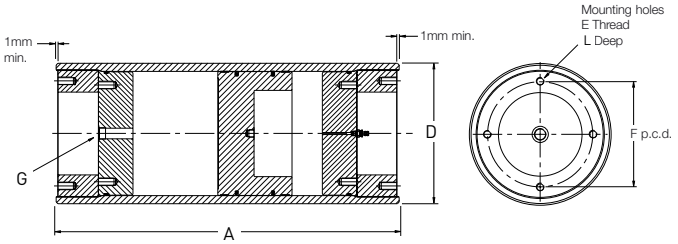

250 and 350 Bar Pressure Ranges
AP Series industrial accumulators are available in two different pressure ratings, to suit maximum working pressures of 250 and 350 bar. The same premium quality design and technical features guarantee optimum performance and service life from every AP Series accumulator model, while differing wall thicknesses allow the designer to specify precisely the right performance envelope for the application.

Available Options
A wide variety of options are available for AP Series accumulators, including:
- Port styles and sizes
- Seal compounds
- High flow gas ports for use with remote gas storage bottles
- Water service versions
- Safety fuses
- Mounting systems
- Precharge/piston position sensors
- Certifications to suit different market requirements

Water Service
AP Series piston accumulators are available for use with water as the fluid medium. Modifications include plating of all working surfaces. Please consult the factory for details.

Operating Temperatures, Seals and Fluids
Standard and optional seal combinations for AP Series accumulators are shown below. Other seals are also available for use in exceptional conditions – please consult the factory with details of the application.

Filtration
For maximum component life, the system should be protected from contamination by effective filtration. Fluid cleanliness should be in accordance with ISO 4406. The quality of filters should be in accordance with the appropriate ISO standards.

The rating of the filter media depends on the system components and the application. The minimum required for hydraulic systems should be class 19/15 to ISO 4406, which equates to 25µ (ß10≥75) to ISO 4572.

Safety
Charging must be carried out by qualified personnel. Before taking any readings or pressurizing with nitrogen, the accumulator must be isolated from the hydraulic system and the fluid side discharged in order to depressurize it. Use only nitrogen (N_2) to pressurize the accumulator.

Danger of Explosion – Never Charge with Oxygen
The types of nitrogen permitted are: type S (99.8% pure); type R (99.99% pure); type U (99.993% pure).

Approvals

Approvals	AP180	AP250	AP360
PED2014/68/EU	•	•	•

Mounting
The optimum mounting orientation is vertical however angled and horizontal mountings are permissible if the hydraulic fluid is kept clean; high levels of contaminants in the fluid can result in uneven or accelerated seal wear.

Bore Size, Pressures & Temperature Range

Bore Size (mm)	Max. Working Pressure (bar)	Volume (Litres)	
		Min	Max
AP180	250/350	6	80
AP250	250/350	30	150
AP360	250/350	100	300

Seals, Fluids and Temperature Ranges

Code	Seal Type	"Min Temp"	"Max Temp"	"Fluid Type"
K	"NBR (Nitrile)"	-30°C	75°C	General purpose, petroleum-based fluids
E	"FPM (Fluorocarbon elastomer)"	-25°C	150°C	High temperature and/or synthetic fluids
D	"EPDM (Ethylene Propylene)"	-25°C	120°C	Phosphate-esters
H	"HNBR (Hydrogenated Nitrile)"	-30°C	130°C	Most oil-based and biodegradable fluids
J	"NBR "Nitrile and filled PTFE"	-30°C	75°C	Water glycol, high water content fluids
Q	"LT-NBR (Low Temperature Nitrile)"	-45°C	71°C	General purpose fluids at low temperatures

Gas Valves

The standard gas charging valve fitted to AP Series 250 and 350 bar piston accumulators is a cored-type gas valve, rated at 350 bar. A mechanically opened and closed poppet-type gas valve cartridge, also rated at 350 bar, is available as an option.

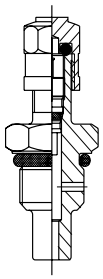

Standard Cored-Type Gas Valve

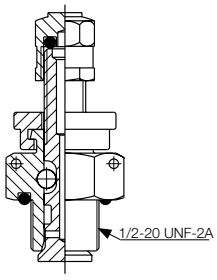

Optional Poppet-Type Gas Valve

Both types of charging valve may be used with the Charging and Gauging Kit.

Piston Accumulator Seal Kits

Seal kits are available for all AP Series accumulator models. When ordering seal kits, please supply the complete model number from the identification plate and specify the fluid type and the temperature at which the accumulator is to be used. Installation and maintenance are described in Bulletin 1240-M1.

The seal kits listed below contain a piston with the appropriate seals ready fitted, to minimize the risk of damage during assembly. Seal kits contain items 5, 6, 7, 8, 9, 10 and 12.

Safety Fuses (Burst Discs)

Safety fuses are available on AP Series accumulators to prevent over-pressurization of gas due to external heat or excess hydraulic pressure. They comprise a housing incorporating a disc which is calibrated to rupture at a pre-determined pressure, to be specific by the customer at the time of ordering. Please contact the factory for further information.

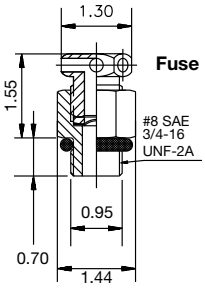

Parts List

1. Shell
2. Hydraulic cap
3. Gas cap
4. Retaining ring (AP360 only)
5. Piston
6. Piston oil seal assembly
7. Piston gas seal assembly
8. Piston bearing ring
9. Cap O-ring
10. Cap O-ring back-up washer
11. Gas valve
12. Gas valve O-ring
13. Gas valve protector (not AP360)
14. Gas valve protector screw (not AP360)

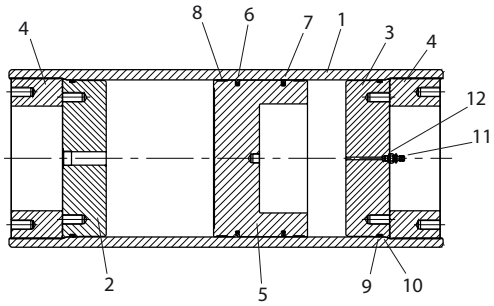

360mm Bore Piston Accumulator

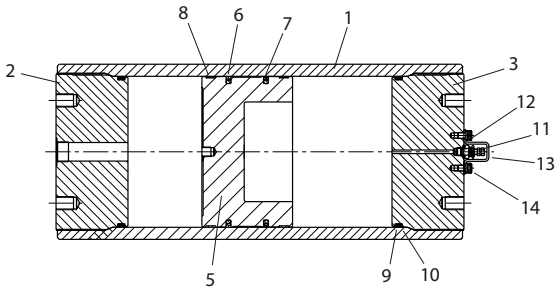

180mm and 250mm Bore Piston Accumulators

Seal Kits

Seal Kit Part Numbers with piston seals assembled (remove the WP for a Seal Kit without piston seal assembled)

Model	Seal Material + Filled PTFE					
	Nitrile NBR	Fluorocarbon Elastomer FPM	Ethylene Propylene EPR	Hydrogenated Nitrile HNBR	Nitrile (HWBF) NBR	Low Temp. Nitrile NBR
AP180	PK180APKWP	PK180APEWP	PK180APDWP	PK180APHWP	PK180APJWP	PK180APQWP
AP250	PK250APKWP	PK250APEWP	PK250APDWP	PK250APHWP	PK250APJWP	PK250APQWP
AP360	PK360APKWP	PK360APEWP	PK360APDWP	PK360APHWP	PK360APJWP	PK360APQWP



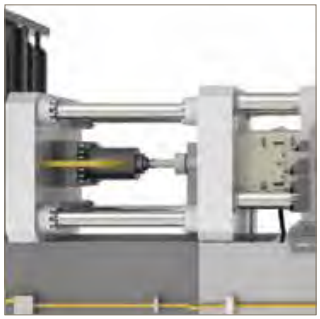

aerospace
climate control
electromechanical
filtration
fluid & gas handling
hydraulics
pneumatics
process control
sealing & shielding





DC Series - Die Casting Piston Accumulators

6 to 80 Litres, 250 & 350 bar



Parker OLAER

ENGINEERING YOUR SUCCESS.

Parker presents the new DC Series of high speed piston accumulators specially designed for DieCasting and Press applications. A wide range of bladder accumulators, gas bottles and accessories complete the Parker offering.



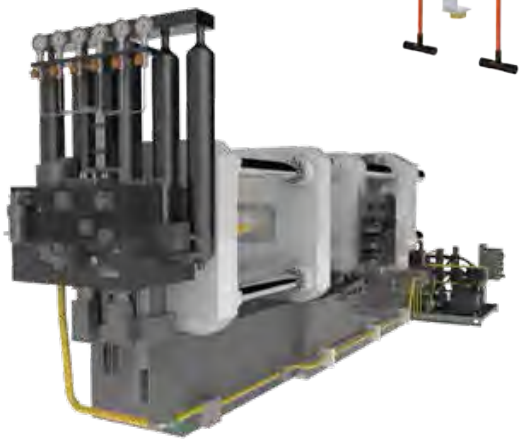



Safety

- **High Test Pressures**
  - High Grade Carbon Steel Tube and End Caps
  - 4:1 Maximum Pressure Safety Factor
  - CE / Pressure Equipment Directive Approved
- **Qualified for High Stress and Fatigue**
- **Proven Reliability - over 10 years in Die Casting**
- **Additional Safety Fuse / Burst Disc Available**

Efficiency

- **High Speed, High Flow, High Cycle Rate**
  - 6 - 8 Metres Per Second Piston Velocity
  - Low Friction Piston Seal System
  - Precise Engineering Design to close tolerances
  - Low Friction Tube Surface Finish
  - Fluid Compatibility Water Glycol or Mineral Oil
  - Flange & Port options for High Flow rates

Flexibility

- **Interchange Capability**
  - Complete Range of Flange or Port Sizes
  - Mounting Interface to customer requirement
  - One Piece or Two Piece Hydraulic & Nitrogen End Cap
  - Port Orientation 45° or full 360° increments
  - Suitable for Retrofit

Reliability

- **Proven Application Performance and Reliability**
  - The range has been utilised in high speed Die Casting Applications for over 10 Years and the new wider range of DC piston accumulators offer additional product features and technical benefits to meet customer requirements.

Tel: +45 63 12 83 00 | Email: ps@hymatik.com | www.hymatik.com | Hvidkaervej 27a, DK-5250 Odense SV, Denmark

DC Series: How to order

Series	Model	Type of Construction	Options	Capacity	Working Pressure	Design Number	Seal Type	Port Size	Gas Port	Pre-Charge
DC	250	E	M	080	L	2	K	RF	S	/ 010

DC Series Accumulator
B Bottle

Code	Bore Size (nominal)
180	180 mm bore
250	250 mm bore

Code	Approval Type
E	According to PED 2014/68/EU

Code	Valve Options
O	No gas valve
M	Poppet-type gas valve
L	Poppet-type gas valve + water service
P	Poppet-type gas valve + safety fuse
R	Poppet-type gas valve + water service + safety fuse

Code	Capacity	Model	Code	Capacity	Model
006	6.0	DC180 only	**030**	30	DC180 & DC250
008	8.0	DC180 only	**040**	40	DC180 & DC250
010	10	DC180 only	**050**	50	DC180 & DC250
015	15	DC180 only	**060**	60	DC180 & DC250
020	20	DC180 only	**080**	80	DC180 & DC250
025	25	DC180 only			

Code	Maximum Working Pressure [3]
L	250 bar
H	350 bar

Code	Port
[2]	Metric mounting + BSPP port (standard)
###	Specials (Parker assigned number)

Please see Seals table on page 137

Please see Fluid Port tables on page 143

Gas Port
Specification (where no valve supplied)

[1] Other approvals are available to order – please consult the factory.
[2] Where a gas port is specified, no gas valve will be supplied.
[3] For other pressure ratings, please consult the factory.

Hydraulic and Gas Port Modifications

For accumulators with non-standard ports, specify special gas and/or hydraulic ports and use the appropriate port code from page 135. A typical model number for an accumulator with ISO 6149 hydraulic and gas ports would be: A - 3 - T - M - 0090 - D - 2 - K - YE/YE

Code	Pre-Charge (for example)
100	100 bar
200	200 bar

DC Series 250&350 bar, 10 to 80 Litres

Standard version (Carbon Steel shell/NBR mix) compatible with mineral oils (2).
According to PED 2014/68/EU, EN 14359, Fluid Group 2 (3).
Product, Part numbers, Accessories

Technical characteristics										Serie 250 Bar			Serie 350 Bar		
Model	**Bore**	Nominal **Volume** (Litres)	**Max Flow Rate** l/min	**A**	**C**	**E**	**F**	**L**	**G" Port BSPP**	**Part number**	**Weight** (KG)	**øD**	**Part number**	**Weight** (KG)	**øD**
DC 180	180	10	12,000	748	42	M16x2	140	20	G1.1/2	DC180E0010L2K**	93	207	DC180E0010H2K**	117	220
	180	15	12,000	944	42	M16x2	140	20	G1.1/2	DC180E0015L2K**	106	207	DC180E0015H2K**	136	220
	180	20	12,000	1141	42	M16x2	140	20	G1.1/2	DC180E0020L2K**	118	207	DC180E0020H2K**	155	220
	180	25	12,000	1337	42	M16x2	140	20	G1.1/2	DC180E0025L2K**	131	207	DC180E0025H2K**	175	220
	180	30	12,000	1534	42	M16x2	140	20	G1.1/2	DC180E0030L2K**	143	207	DC180E0030H2K**	194	220
	180	40	12,000	1927	42	M16x2	140	20	G1.1/2	DC180E0040L2K**	168	207	DC180E0040H2K**	232	220
DC 250	250	30	23,000	1041	42	M22x2.5	170	30	G1.1/2	DC250E0030L2K**	245	290	DC250E0030H2K**	317	310
	250	40	23,000	1245	42	M22x2.5	170	30	G1.1/2	DC250E0040L2K**	271	290	DC250E0040H2K**	359	310
	250	50	23,000	1449	42	M22x2.5	170	30	G1.1/2	DC250E0050L2K**	298	290	DC250E0050H2K**	401	310
	250	60	23,000	1652	42	M22x2.5	170	30	G1.1/2	DC250E0060L2K**	325	290	DC250E0060H2K**	442	310
	250	80	23,000	2060	42	M22x2.5	170	30	G1.1/2	DC250E0080L2K**	379	290	DC250E0080H2K**	526	310

(2) For other fluids consult Parker

(3) For Fluid group 1 consideration : consult Parker

250 Bar and 350 Bar
DC Series
180mm and 250mm Bore
with CE Approval

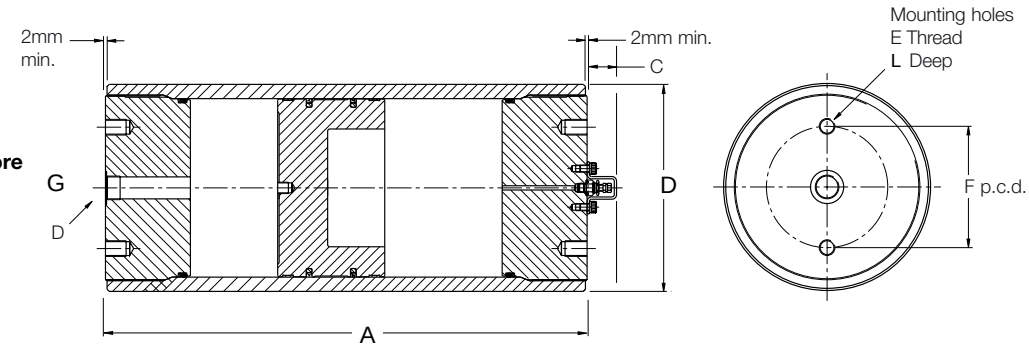

250 Bar and 350 Bar
DC Series
250mm and 360mm Bore
with CE Approval

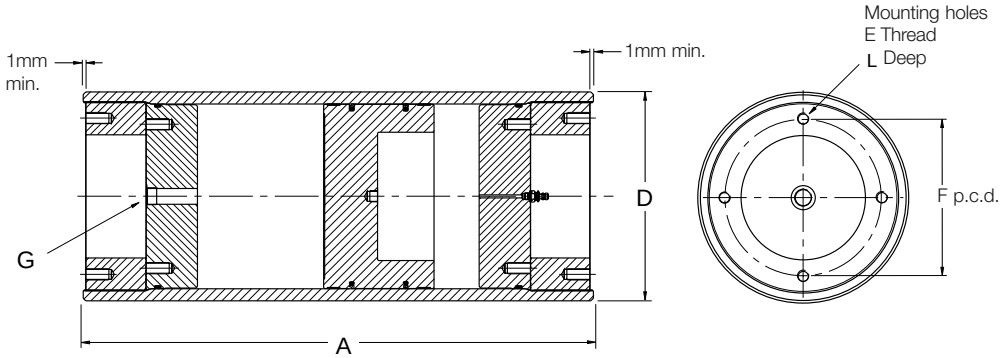

Tel: +45 63 12 83 00 | Email: ps@hymatik.com | www.hymatik.com | Hvidkaervej 27a, DK-5250 Odense SV, Denmark

Hydraulic and Gas Ports

The BSPP ports shown are supplied as standard at the fluid ends of DC Series 250 bar accumulators, and at the gas ends of these accumulators when ordered for use with gas bottles. A range of optional threaded and flanged ports is also available, as shown below. All ports are specified by adding the relevant code to the accumulator model number.

BSPP Threaded Ports

Thread Size	From Model	Code
G1	All models	RD
G1 1/4		RE
G1 1/2 (standard)		RF
G2		RG

Optional Flanged Ports

Bore Ø	ISO Port	DN10	DN13	DN19	DN25	DN32	DN38	DN51	DN56	DN63	DN70	DN80
180	ISO 6162		•	•	•	•	•	•				
	ISO 6164	•	•	•	•	•	•	•	•	•		
250	ISO 6162		•	•	•	•	•	•				
	ISO 6164	•	•	•	•	•	•	•	•	•	•	•

Optional Flanged Ports

DC Series Piston Accumulators are available with metric flange ports to ISO 6162/3000 psi and ISO 6164/6000 psi as shown in the tables. Inch pattern flange ports and flange ports for higher pressure operation are also available, please consult the factory for details.

ISO 6162 Flanged Port Dimensions

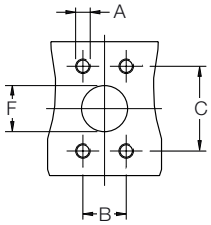

ISO 6164 Flanged Port Dimensions

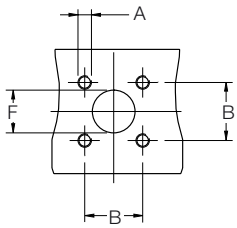

Flange Ports to ISO 6162/3000 psi						
Flange Size	From Model	A *	B ± 0.25	C ± 0.25	F	Code
DN13	180	M8	17.5	38.1	13	MT
DN19	180	M10	22.3	47.6	19	MU
DN25	180	M10	26.2	52.4	25	MV
DN32	180	M10	30.2	58.7	32	MW
DN38	180	M12	35.7	69.9	38	MJ
DN51	180	M12	42.9	77.8	51	ML
DN64	180	M12	50.8	88.9	64	MM
DN76	180	M16	61.9	106.4	76	MN

Flange Ports to ISO 6164/6000 psi					
Flange Size	From Model	A	B ± 0.25	F +0.0 -1.5	Code
DN10	180	M6 x 1	24.7	10.0	SD
DN13	180	M8 x 1.25	29.7	13.0	SE
DN19	180	M8 x 1.25	35.4	19.0	SF
DN25	180	M10 x 1.5	43.8	25.0	SG
DN32	180	M12 x 1.75	51.6	32.0	SH
DN38	180	M16 x 2	60.1	38.0	SP
DN51	180	M16 x 2	69.3	51.0	SQ
DN56	180	M20 x 2.5	83.4	56.0	SX
DN63	180	M24 x 3	102.5	63.0	SR
DN70	250	M24 x 3	113.1	70.0	SY
DN80	250	M30 x 3.5	123.7	80.0	SZ

Additional threaded and flanged port options are available

Accessories

Burst Disc (Safety Fuse)

The burst discs (safety fuses) are a safety device which release the gas pressure independent of the pressure being caused by a fire or a failure of other safety equipment in the system. They are available in carbon steel or stainless steel.



Clamps & Brackets

Parker clamps are designed to allow quick and easy installation of accumulators. Manufactured from carbon and stainless steel.



Proportional Relief Valves

An automatic protection mechanism for progress instrumentation systems. When upstream pressure exceeds the closing force exerted by the valve's spring, the lower stem opens and permits flow through the valve's outlet port - which can be ducted to a safe place or released to atmosphere. Flow rate increases proportionately to the increase in upstream pressure.



Automated Charging System

This automated nitrogen top up system for gas charging (CLS) ensures accumulators are precharged to an accurate level and reduces human intervention on site, providing a virtually maintenance free solution. New Patent Applied.



Accumulator & Gas Bottle Racks

Parker can provide an additional service for customers who would like their accumulators and gas backup bottles positioned in racks with connecting pipework, manifolds and valves. The accumulator racks can be load tested and painted according to customer requirements. The Parker technical teams are highly experienced with dedicated team members for this service, which can save you valuable time and resources.







aerospace
climate control
electromechanical
filtration
fluid & gas handling
hydraulics
pneumatics
process control
sealing & shielding





EHP Series
Piston Accumulators

0.1 to 1000 Litres, up to 350 bar (as standard)



ENGINEERING YOUR SUCCESS.

Tel: +45 63 12 83 00 | Email: ps@hymatik.com | www.hymatik.com | Hvidkaervej 27a, DK-5250 Odense SV, Denmark

Description

The EHP piston accumulators are manufactured in Carbon & Stainless Steel and are available with a wide range of bore sizes to PED 2014/68/EU. Suitable for Industrial, Marine, Oil, Gas & Energy applications (250 & 350 bar/ up to 540mm bore as standard).

A more bespoke range of EHP piston accumulators is available offering higher pressures 250 bar to 3,000 bar and any volume capacity up to 1350 litres.

Parker Olaer have developed very sophisticated simulation software to optimize sizing recommendations for hydraulic accumulators. You can download the ccumulator sizing software from www.Parker.com/acde.

Features/Benefits

- **Standard temperatures range from -15°C to 100°C, piston accumulators can also be manufactured to operate in temperatures of -40°C to 150°C. Temperatures outside this range can be met to suit specific applications.**
- **A wide range of international approvals and materials are available to ensure your piston accumulator is suitable for even the harshest environments and powerful applications. Our purpose built production area incorporates; Ultrasonic cleaning of components; tube washing bath with capability of up to 4 metres long x 750mm diameter.**
- **Parker piston accumulators can be designed and built to your specified criteria and can therefore meet any space limitations you may have. For unique applications and hostile environments, different designs, materials and coatings can be supplied. An extensive selection of connection ports can be incorporated to suit your requirements.**
- **A dedicated technical team uses the latest 3D SolidWorks and Autodesk Inventor software driven by calculation programs (linked to EN14359, ASME VIII, Selo, NR13, CUTR, DNV GL, ABS and PD5500) to reduce design times and provide technical customer support.**

Markets

- **Industrial**
- **Mobile**
- **Renewable Energy**
- **Power Generation**
- **Oil & Gas**
- **Marine**

Applications

- **Industrial Machine Tools**
- **Mining**
- **Die casting & Press**
- **Renewable Energy**
- **Wind power**



Tel: +45 63 12 83 00 | Email: ps@hymatik.com | www.hymatik.com | Hvidkaervej 27a, DK-5250 Odense SV, Denmark

In-house Facilities

Design, Development and Production Services

Design Facilities

A dedicated technical team uses the latest 3D SolidWorks and Autodesk Inventor software driven by calculation programs (linked to EN14359, PD5500 and ASME VIII) to reduce design times and provide technical customer support.



Assembly

Our purpose built production area incorporates;

- Ultrasonic cleaning of components; tube washing bath with capability of up to 4 metres long x 750mm diameter.
- 40 metre x 5 tonne crane facility throughout the stocking, assembly and testing areas and 15 tonne crane in the Fabrication area.

Hydraulic Testing

The piston testing facility provides:

- Data logging of test results for permanent record
- Remote inspection for leaks by CCTV
- Steel self contained high safety cell
- Lift-off roof for large cylinders
- 2 off air-driven test rigs (water/ glycol & mineral oil) high volume, low pressure pre-test filling capable of testing up to 3000 bar



General Information EHP Piston Accumulators

Technical Characteristics

The accumulator comprises of a pressure vessel, a piston and its seals.

- Shell material options include standard carbon steel and stainless steel.
- End caps - steel, pistons lightweight aluminium alloy. Piston and end cap seals in NBR (standard version), other compounds to suit application.
  -
- For unique applications and hostile environments, different designs, materials and coatings can be supplied. Please contact our division
- A wide variety of options is available following of the series, for example
  - Threaded and manifold port styles and sizes
  - Seal compounds
  - High flow gas ports
  - Gas valves, safety fuses....

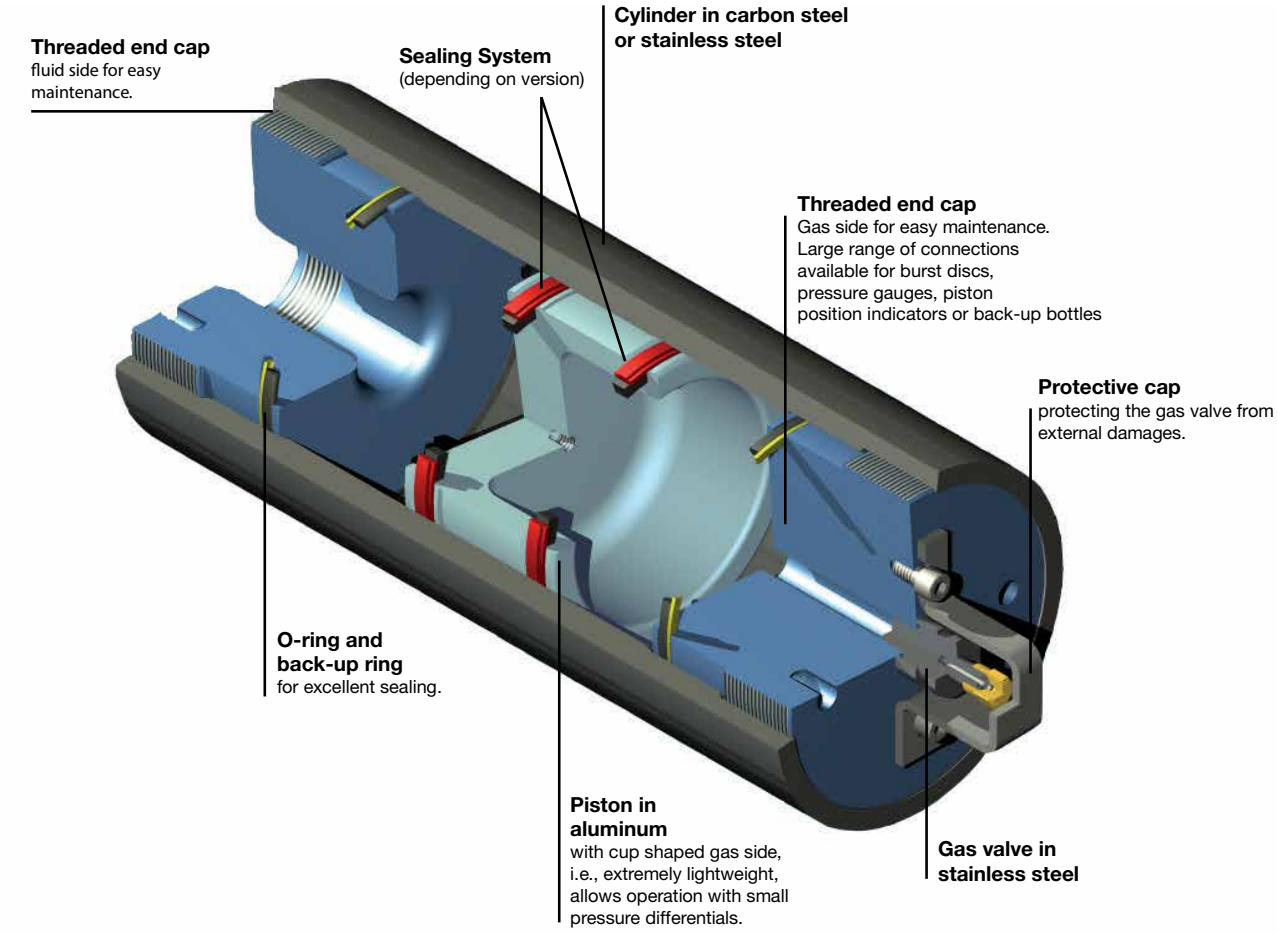

EHP Series: How to order a Piston Accumulator

Series	Shell Material	Nominal Volume	Max. working pressure (PS)	Bore Size	Connections Fluid Side	Additional Connections Gas Side	Gas Valve	Piston Seal Material	Burst disc connection	N² Precharge
EHP	G	C	0080	250	100	AH	AF	A	A	0	000

EHP Piston Accumulator

G = Adjustable caps (rotating)

C = Carbon Steel
S = Stainless Steel

in Litres

in bar

in mm

Row, Column (00 if none, or see table below)

Row, Column (see table below)

A : Gas valve MS 28889 (350 bar) 1/2"-20 UNF/8V1 P/N : 10512600000
B: Standard gas valve (350 bar) 1/2"-20 UNF/ 5/8"-18 UNF P/N : 10239601626

A : Wynseal recommended for mineral oils V= 0.5 m/s
B : AQ/seal recommended for other fluids V = 2 m/s

Code	Burst Disc	Size
0	Without burst disc, no connection	
A	275 Bar/80°C	G 1/4"
B	385 Bar/80°C	G 1/4"
C	230 Bar/80°C	G 1/4"
D	250 Bar/80°C	G 1/4"
E	300 Bar/80°C	G 1/4"
F	420 Bar/80°C	G 1/4"
K	230 Bar/80°C	
L	275 Bar/80°C	
M	385 Bar/80°C	
N	without burst disc. Plugged connection	NPT 1/4"
P	without burst disc. Plugged connection	G 1/4"
R	300 Bar/80°C	
X	Special	

N² preload in bar (example 010 = 10 bar, 000 N² if no preload)

Fluid side connection/Gas side additional connection

Specification		A	B	C	D	E	F	G	H	I	K	L	M	N
Thread to ISO228-1 (G)	A	G1/8"-28	G1/4"-19	G3/8"-19	G1/2"-14	G5/8"-14	G3/4"-14	G7/8"-14	G1"-11	G 1 1/4"-11	G1 1/2"-11	G2"-11	G2 1/2"-11	G3"-11
SAE Flange (ISO 6162)	B	1/2" 210 Bar	3/4" 210 Bar	1" 210 Bar	1 1/4" 210 Bar	1 1/2" 210 Bar	2" 210 Bar	2"1/2 ca 175 Bar	3" ca 140 Bar					
SAE Flange	C	1/2" 3000 psi	3/4" 3000 psi	1" 3000 psi	1 1/4" 3000 psi	1 1/2" 3000 psi	2" 3000 psi	2"1/2 3000 psi	3" 3000 psi					
SAE Port (UN)	D	#5 1/2"-20	#6 9/16"-18	#8 3/4"-16	#10 7/8"-14	#12 1 1/16"-12	#16 1 5/16"-12	#20 1 5/8"-12	#24 1 7/8"-12	#32 2 1/2"-12				
Metric (ISO 6149-1)	E	M10 x 1	M12 x 1,5	M14 x 1,5	M18 x 1,5	M22 x 1,5	M27 x 2	M33 x 2	M42 x 2	M48 x 2				

EHP Series 207 bar, 60 to 400 Litres, Ø 360

Standard version (Stainless Steel shell/NBR mix) compatible with mineral oils (2).
According to PED 2014/68/EU, EN 14359, Fluid Group 2 (3).

Product, Part numbers, Accessories

Type	Part Number	Seal Kit	Effective Gas vol. Litres	Max. Working pressure (PS) bar	Admissible Accumulator Temperature min/max (°C)	Weight kg	A mm	ø D mm	ø d mm	Std Fluid opening
EHP(G) S 0600-207-360	815EHPGS0602036	8220000000016	60	207	-15/100	446	1106	408	360	G2”
EHP(G) S 0700-207-360	815EHPGS0702036	8220000000016	70	207	-15/100	467	1204	408	360	G2”
EHP(G) S 0800-207-360	815EHPGS0802036	8220000000016	80	207	-15/100	488	1303	408	360	G2”
EHP(G) S 0900-207-360	815EHPGS0902036	8220000000016	90	207	-15/100	509	1401	408	360	G2”
EHP(G) S 1000-207-360	815EHPGS1002036	8220000000016	100	207	-15/100	530	1500	408	360	G2”
EHP(G) S 1500-207-360	815EHPGS1502036	8220000000016	150	207	-15/100	635	1990	408	360	G2”
EHP(G) S 2000-207-360	815EHPGS2002036	8220000000016	200	207	-15/100	740	2481	408	360	G2”
EHP(G) S 2500-207-360	815EHPGS2502036	8220000000016	250	207	-15/100	845	2973	408	360	G2”
EHP(G) S 3000-207-360	815EHPGS3002036	8220000000016	300	207	-15/100	950	3464	408	360	G2”
EHP(G) S 3500-207-360		8220000000016	350	207	-15/100	1055	3955	408	360	G2”
EHP(G) S 4000-207-360		8220000000016	400	207	-15/100	1160	4426	408	360	G2”

(2) For other fluids consult Parker

(3) For Fluid group 1 consideration : consult Parker

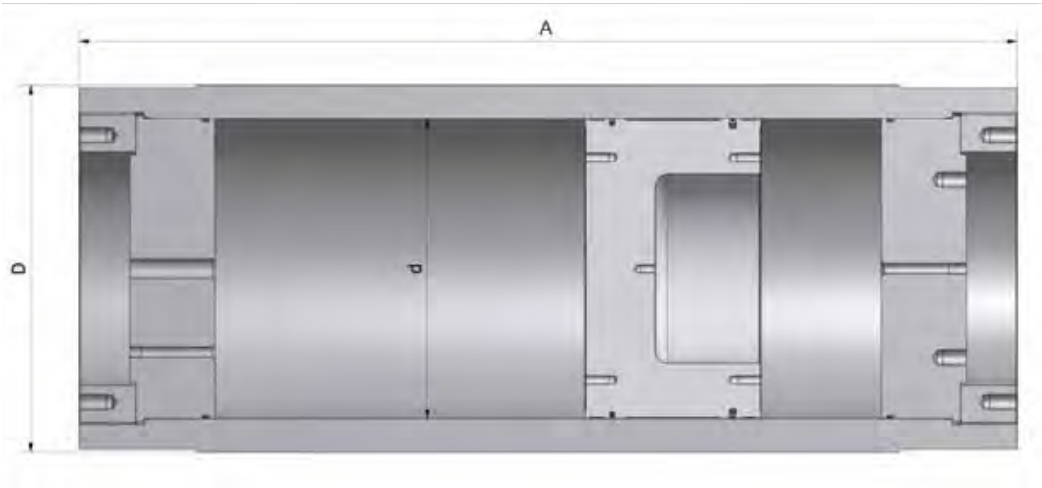

Tel: +45 63 12 83 00 | Email: ps@hymatik.com | www.hymatik.com | Hvidkaervej 27a, DK-5250 Odense SV, Denmark

EHP Series 220 bar, 150 to 650 Litres, Ø 540

Standard version (Carbon Steel shell/seals for mineral oils)(2) temperature from - 15° up to 100°C.
Maximum Piston Speed 2 m/s. According to PED 2014/68/EU, Fluid Group 1 or 2 (3).

Product, Part numbers, Accessories

Type	Part Number	Seal Kit	Effective Gas vol. Litres	Max. Working pressure (PS) bar	Admissible Accumulator Temperature min/max (°C)	Weight kg	A mm	ø D mm	ø d mm	Std Fluid opening
EHP(G) C 1500-220-540 ALAFBB0000	815EHPGC15002254	8220000000018	150	220	-15/100	2147	1415	630	540	G3"
EHP(G) C 2000-220-540 ALAFBB0000	815EHPGC20002254	8220000000018	200	220	-15/100	2280	1633	630	540	G3"
EHP(G) C 2500-220-540 ALAFBB0000	815EHPGC25002254	8220000000018	250	220	-15/100	2413	1851	630	540	G3"
EHP(G) C 3000-220-540 ALAFBB0000	815EHPGC30002254	8220000000018	300	220	-15/100	2546	2068	630	540	G3"
EHP(G) C 3200-220-540 ALAFBB0000	815EHPGC32002254	8220000000018	320	220	-15/100	2625	2156	630	540	G3"
EHP(G) C 3400-220-540 ALAFBB0000	815EHPGC34002254	8220000000018	340	220	-15/100	2702	2243	630	540	G3"
EHP(G) C 3500-220-540 ALAFBB0000	815EHPGC35002254	8220000000018	350	220	-15/100	2741	2375	630	540	G3"
EHP(G) C 3600-220-540 ALAFBB0000	815EHPGC36002254	8220000000018	360	220	-15/100	2780	2331	630	540	G3"
EHP(G) C 3800-220-540 ALAFBB0000	815EHPGC38002254	8220000000018	380	220	-15/100	2857	2418	630	540	G3"
EHP(G) C 4000-220-540 ALAFBB0000	815EHPGC40002254	8220000000018	400	220	-15/100	3004	2505	630	540	G3"
EHP(G) C 4500-220-540 ALAFBB0000	815EHPGC45002254	8220000000018	450	220	-15/100	3128	2723	630	540	G3"
EHP(G) C 5000-220-540 ALAFBB0000	815EHPGC50002254	8220000000018	500	220	-15/100	3322	2942	630	540	G3"
EHP(G) C 5500-220-540 ALAFBB0000	815EHPGC55002254	8220000000018	550	220	-15/100	3516	3160	630	540	G3"
EHP(G) C 6000-220-540 ALAFBB0000	815EHPGC60002254	8220000000018	600	220	-15/100	3711	3379	630	540	G3"
EHP(G) C 6500-220-540 ALAFBB0000	815EHPGC65002254	8220000000018	650	220	-15/100	3904	3597	630	540	G3"

Available in ASME VIII Division I U STAMPED, in that case EHP (G)C ---> IHP (G)C

(2) For other fluids consult Parker

(3) For Fluid group 1 consideration : consult Parker

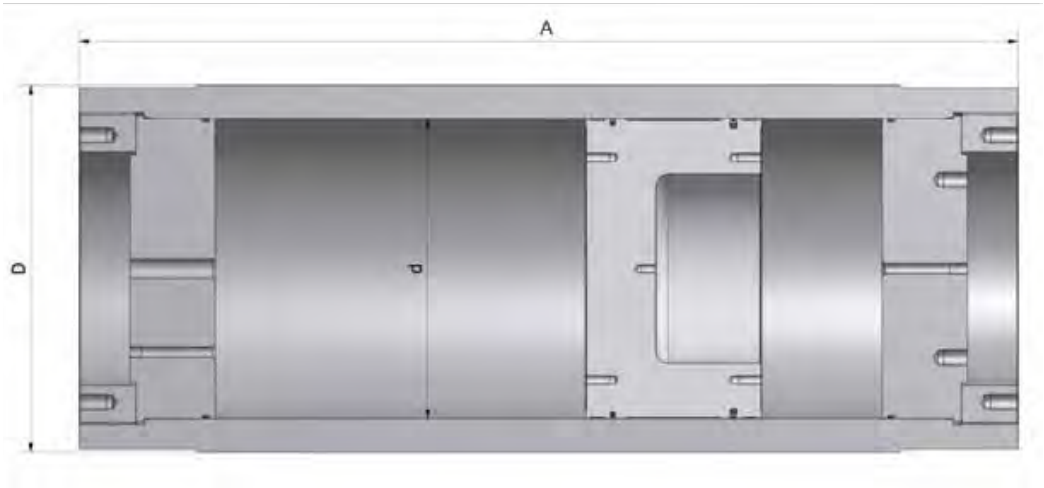

EHP Series 250 bar, 1 to 4 Litres, Ø 80

Standard version (Carbon steel/Wynseal) for mineral oils (2).
According to PED 2014/68/EU, Fluid Group 2, EN14359,Fluid Group 2 (3)

Product, Part numbers, Accessories

Type Part number	**Pre-charge**			**Wynseal Seal Kit**	**Without burst disc. Plugged connection**	
	1 - 109 bar	**110 - 209 bar**	**210 - 300 bar**	Part number	Model Part number	
EHP-C-0010-250-080-AF00AA0000 * 9000-0701-AF00AA0000	Consult Division	Consult Division	Consult Division	Consult Division 9782-080-000	-	
EHP-C-0010-250-080-AF00AAP000 * 9000-0701-AF00AAP000	Consult Division	Consult Division	Consult Division	Consult Division 9782-080-000	Consult Division	
EHP-C-0020-250-080-AB00AA0000 9098-1001-AB00AA000	Consult Division	Consult Division	Consult Division	Consult Division 9782-080-000	-	
EHP-C-0020-250-080-AF00AA0000 9098-1001-AF00AA0000	Consult Division	Consult Division	Consult Division	Consult Division 9782-080-000	-	
EHP-C-0020-250-080-AF00AAP000 9098-1001-AF00AAP000	Consult Division	Consult Division	Consult Division	Consult Division 9782-080-000	Consult Division	
EHP-C-0030-250-080-AF00AA0000 9098-1301-AF00AA0000	Consult Division	Consult Division	Consult Division	Consult Division 9782-080-000	-	
EHP-C-0040-250-080-AF00AA000 9098-1601-AF00AA0000	Consult Division	Consult Division	Consult Division	Consult Division 9782-080-000	-	

Available in ASME VIII Division I U STAMPED, in that case EHP (C) ---> IHP (C)

* According PED 2014/68/EU Article 4.3

(2) For other fluids consult Parker

(3) For Fluid group 1 consideration : consult Parker

Tel: +45 63 12 83 00 | Email: ps@hymatik.com | www.hymatik.com | Hvidkaervej 27a, DK-5250 Odense SV, Denmark

	Type Part number	**Effective Gas vol.** Litres	**Max. Working pressure (PS)** bar	**ø** Bore	**Max Flow Rate** lt/ min	**Admissible Accumulator Temperature min/max** (°C)	**Weight** kg	**A max Height** mm	**External øD** mm	**Oil port connection**	**V** m/s
	EHP-C-0010-250-080-AF00AA0000 * 9000-0701-AF00AA0000	1	250	80	151	-20/+80	9.7	387	92	G 3/4"	0.5
	EHP-C-0010-250-080-AF00AAP000 * 9000-0701-AF00AAP000	1	250	80	151	-20/+80	9.7	387	92	G 3/4"	0.5
	EHP-C-0020-250-080-AB00AA0000 9098-1001-AB00AA000	2	250	80	151	-20/+80	12.2	586	92	G 1/4"	0.5
	EHP-C-0020-250-080-AF00AA0000 9098-1001-AF00AA0000	2	250	80	151	-20/+80	12.2	586	92	G 3/4"	0.5
	EHP-C-0020-250-080-AF00AAP000 9098-1001-AF00AAP000	2	250	80	151	-20/+80	12.2	586	92	G 3/4"	0.5
	EHP-C-0030-250-080-AF00AA0000 9098-1301-AF00AA0000	3	250	80	151	-20/+80	14.7	785	92	G 3/4"	0.5
	EHP-C-0040-250-080-AF00AA000 9098-1601-AF00AA0000	4	250	80	151	-20/+80	17.2	984	92	G 3/4"	0.5

Above dimensions are in mm and are subject to manufacturing tolerances.

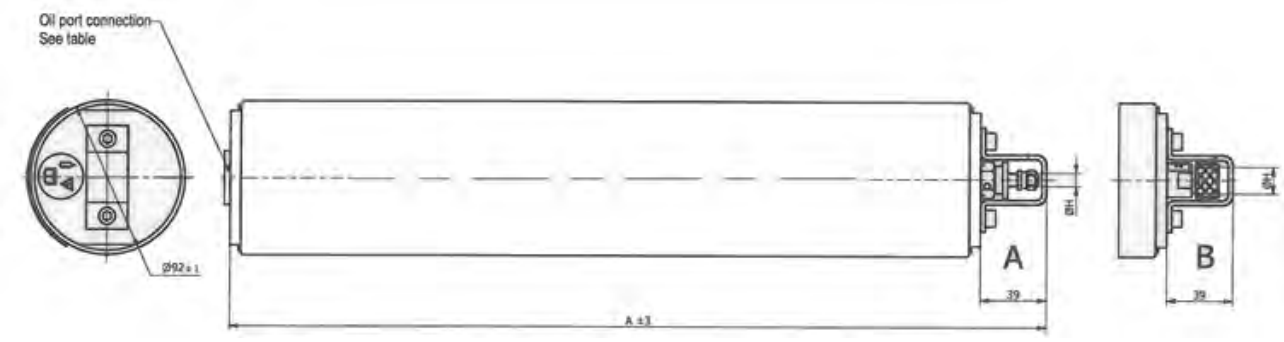

GAS CONNECTIONS

Model Valve A	**Model Valve B**
8V1	5/8"18 UNF

Above dimensions are in mm and are subject to manufacturing tolerances.

EHP Series 250 bar, 2 to 10 Litres, Ø 100

Standard version (Carbon steel/Wynseal) for mineral oils (2).
According to PED 2014/68/EU , EN 14359, Fluid Group 2 (3)

Product, Part numbers, Accessories

Type Part number	**Pre-charge**			**Wynseal Seal Kit**	**Without burst disc. Plugged connection**	
	1 - 109 bar	**110 - 209 bar**	**210 - 300 bar**	Part number	Model **Price** Part number	
EHP-C-0020-250-100-AD00AA0000 9098-1002-AD00AA0000	**Consult Division**	**Consult Division**	**Consult Division**	3782-100-000		
EHP-C-0020-250-100-AF00AA0000 9098-1002-AF00AA0000	**Consult Division**	**Consult Division**	**Consult Division**	3782-100-000	-	
EHP-C-0040-250-100-AD00AA0000 9098-1602-AD00AA0000	**Consult Division**	**Consult Division**	**Consult Division**	3782-100-000		
EHP-C-0040-250-100-AF00AA0000 9098-1602-AF00-AA0000	**Consult Division**	**Consult Division**	**Consult Division**	3782-100-000		
EHP-C-0040-250-100-DF00AA0000 9098-1602-AD00AA0000	**Consult Division**	**Consult Division**	**Consult Division**	3782-100-000		
EHP-C-0060-250-100-AF00AA000 9098-1902-AF00AA0000	**Consult Division**	**Consult Division**	**Consult Division**	3782-100-000	-	
EHP-C-0060-250-100-AH00AA0000 9098-1902-AH00AA0000	**Consult Division**	**Consult Division**	**Consult Division**	3782-100-000	-	
EHP-C-0080-250-100-AF00AA0000 9098-2002-AF00AA0000	**Consult Division**	**Consult Division**	**Consult Division**	3782-100-000	-	
EHP-C-0080-250-100-AH00AAP000 9098-2002-AH00-AAP000	**Consult Division**	**Consult Division**	**Consult Division**	3782-100-000	**Consult Division**	
EHP-C-0100-250-100-AH00AA0000 9098-2102-AH00AA0000	**Consult Division**	**Consult Division**	**Consult Division**	3782-100-000	-	
EHP-C-0100-250-100-AH00AAP000 9098-2102-AH00AAP000	**Consult Division**	**Consult Division**	**Consult Division**	3782-100-000	**Consult Division**	

Available in ASME VIII Division I U STAMPED, in that case EHP (C) ---> IHP (C)

(2) For other fluids consult Parker

(3) For Fluid group 1 consideration : consult Parker

	Type Part number	**Effective Gas vol.** Litres	**Max. Working pressure (PS)** bar	**ø** Bore	**Max Flow Rate** lt/min	**Admissible Accumulator Temperature min/max** (°C)	**Weight** kg	**A max Height** mm	**External øD** mm	**Oil port con-nection**	**V** m/s
	EHP-C-0020-250-100-AD00AA0000 9098-1002-AD00AA0000	2	250	100	236	-20/+80	16	441	115	G 1/2”	1
	EHP-C-0020-250-100-AF00AA0000 9098-1002-AF00AA0000	2	250	100	236	-20/+80	16	441	115	G 3/4”	1
	EHP-C-0040-250-100-AD00AA0000 9098-1602-AD00AA0000	4	250	100	236	-20/+80	22	696	115	G 1/2”	1
	EHP-C-0040-250-100-AF00AA0000 9098-1602-AF00-AA0000	4	250	100	236	-20/+80	22	696	115	G 3/4”	1
	EHP-C-0040-250-100-DF00AA0000 9098-1602-AD00AA0000	4	250	100	236	-20/+80	22	696	115	#16 1 5/16”	1
	EHP-C-0060-250-100-AF00AA000 9098-1902-AF00AA0000	6	250	100	236	-20/+80	27	951	115	G 3/4”	1
	EHP-C-0060-250-100-AH00AA0000 9098-1902-AH00AA0000	6	250	100	236	-20/+80	27	951	115	G 1”	1
	EHP-C-0080-250-100-AF00AA0000 9098-2002-AF00AA0000	8	250	100	236	-20/+80	32	1205	115	G 3/4”	1
	EHP-C-0080-250-100-AH00AAP000 9098-2002-AH00-AAP000	8	250	100	236	-20/+80	32	1205	115	G 1”	1
	EHP-C-0100-250-100-AH00AA0000 9098-2102-AH00AA0000	10	250	100	236	-20/+80	37	1460	115	G 1”	1
	EHP-C-0100-250-100-AH00AAP000 9098-2102-AH00AAP000	10	250	100	236	-20/+80	37	1460	115	G 1”	1

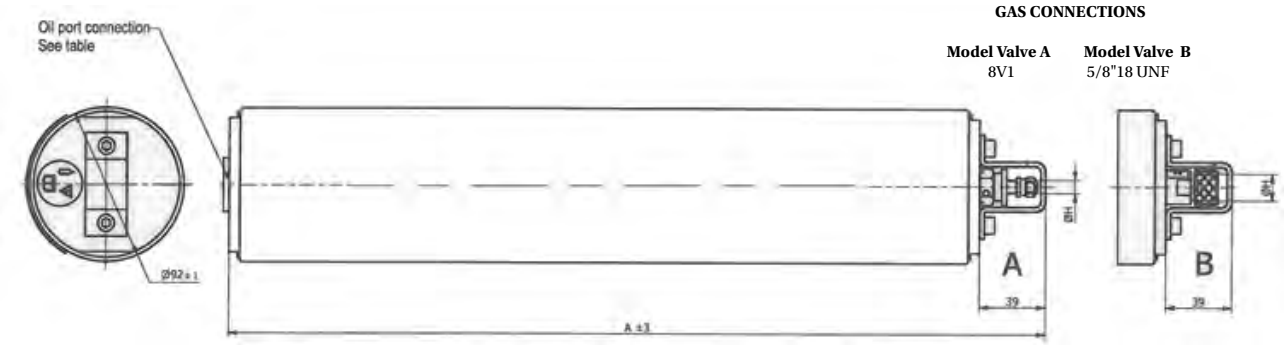

EHP Series 250 bar, 4 to 20 Litres, Ø 140

Standard version (Carbon steel/Wynseal for mineral oil, AQseal for other fluids) for mineral oils. (2)
According to PED 2014/68/EU, EN14359 Fluid Group 2 (3)

Product, Part numbers, Accessories

Type Part number	**Pre-charge**			**Wynseal or AQ Seal Seal Kit**	**Without burst disc. Plugged connection**	
	1 - 109 bar	**110 - 209 bar**	**210 - 300 bar**	**Part number**	**Model Price Part number**	
EHP-C-0040-250-140-AKAFABP000 9098-1604-AKAFABP000	Consult Division	Consult Division	Consult Division	AQ seal 001185-00000.	Consult Division	
EHP-C-0060-250-140-AKAFABP000 9098-1904-AKAFABP000	Consult Division	Consult Division	Consult Division	AQ seal 001185-00000.	Consult Division	
EHP-C-0060-250-140-AKAFAAP000 9098-1904-AKAFAAP000	Consult Division	Consult Division	Consult Division	AQ seal 001185-00000.	Consult Division	
EHP-C-0080-250-140-AKAFABP000 9098-2004-AKAFABP000	Consult Division	Consult Division	Consult Division	AQ seal 001185-00000.	Consult Division	
EHP-C-0080-250-140-AKAFAAP000 9098-2004-AKAF-AAP000	Consult Division	Consult Division	Consult Division	AQ seal 001185-00000.	Consult Division	
EHP-C-0100-250-140-AKAFAAP000 9098-2104-AKAFAAP000	Consult Division	Consult Division	Consult Division	AQ seal 001185-00000.	Consult Division	
EHP-C-0150-250-140-AKAFAAP000 9098-2304-AKAFAAP000	Consult Division	Consult Division	Consult Division	AQ seal 001185-00000.	Consult Division	
EHP-C-0150-250-140-AF00AA0000 9098-2304-AF00AA0000	Consult Division	Consult Division	Consult Division	AQ seal 001185-00000.	Consult Division	
EHP-C-0200-250-140-AKAFAAP000 9098-2604-AKAFAAP000	Consult Division	Consult Division	Consult Division	AQ seal 001185-00000.	Consult Division	

Available in ASME VIII Division I U STAMPED, in that case EHP (C) ---> IHP (C)

(2) For other fluids consult Parker

(3) For Fluid group 1 consideration : consult Parker

	Type Part number	**Effective Gas vol.** Litres	**Max. Working pressure (PS)** bar	**ø** Bore	**Max Flow Rate** lt/ min	**Admissible Accumulator Temperature min/max** (°C)	**Weight** kg	**A max Height** mm	**External øD**	**Oil port connection**	**V** m/s
	EHP-C-0040-250-140-AKAFABP000 9098-1604-AKAFABP000	4	250	140	1846	-20/+150	34.1	470	160	G 1 1/2"	2
	EHP-C-0060-250-140-AKAFABP000 9098-1904-AKAFABP000	6	250	140	1846	-20/+150	38.9	600	160	G 1 1/2"	2
	EHP-C-0060-250-140-AKAFAAP000 9098-1904-AKAFAAP000	6	250	140	462	-20/+80	43.7	600	160	G 1 1/2"	0.5
	EHP-C-0080-250-140-AKAFABP000 9098-2004-AKAFABP000	8	250	140	1846	-20/+150	38.9	730	160	G 1 1/2"	2
	EHP-C-0080-250-140-AKAFAAP000 9098-2004-AKAF-AAP000	8	250	140	462	-20/+80	43.7	730	160	G 1 1/2"	0.5
	EHP-C-0100-250-140-AKAFAAP000 9098-2104-AKAFAAP000	10	250	140	462	-20/+80	48.5	860	160	G 1 1/2"	0.5
	EHP-C-0150-250-140-AKAFAAP000 9098-2304-AKAFAAP000	15	250	140	462	-20/+80	60.0	1185	160	G 1 1/2"	0.5
	EHP-C-0150-250-140-AF00AA0000 9098-2304-AF00AA0000	15	250	140	462	-20/+80	71.5	1185	160	G 3/4"	0.5
	EHP-C-0200-250-140-AKAFAAP000 9098-2604-AKAFAAP000	20	250	140	462	-20/+80	60.0	1509	160	G 1 1/2"	0.5

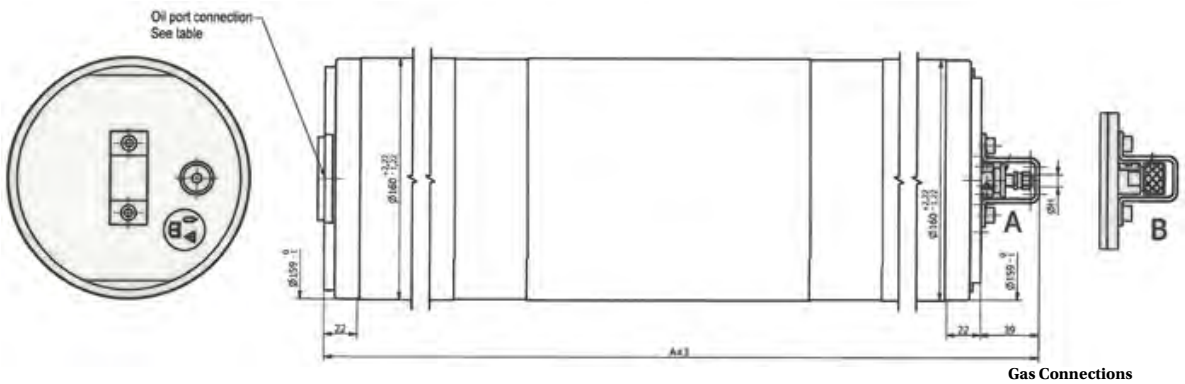

Gas Connections

Model Valve A
1/2-20 UNF/8V1

Model Valve B
1/2-20 UNF/5/8"-18 UNF

EHP Series 250 bar, 8 to 50 Litres, Ø 180

Standard version (Carbon steel/seals for mineral oil). Maximum piston speed 2 m/s.
Suitable for mirneral based hydraulic fluids, Vegetable oils, water glycols. (2)
According to PED 2014/68/EU , Fluid Group 1 or 2 (3) AD2000

Product, Part numbers, Accessories

Type	Part number	**Effec-tive Gas vol.** Litres	**Max. Working pressure (PS)** bar	**Admissible Accumulator Temperature min/max** (°C)	**Weight** kg	**A max Height** mm	**External øD** mm	**ød** mm	**Max Fluid open-ing**	**Seal Kit**
EHP C 0080/250/180 AHAFBB000	815EHP0C00802518	8	250	- 15/100	110	622	219.1	180	G1”	8220000000011
EHP C 0090/250/180 AHAFBB000	815EHP0C00902518	9	250	- 15/100	115	660	219.1	180	G1”	8220000000011
EHP C 0100/250/180 AHAFBB000	815EHP0C01002518	10	25	- 15/100	120	700	219.1	180	G1”	8220000000011
EHP C 0150/250/180 AHAFBB000	815EHP0C01502518	15	250	- 15/100	135	896	219.1	180	G1”	8220000000011
EHP C 0180/250/180 AHAFBB000	815EHP0C01802518	18	250	- 15/100	150	1092	219.1	180	G1”	8220000000011
EHP C 0200/250/180 AHAFBB000	815EHP0C02002518	20	250	- 15/100	160	1095	219.1	180	G1”	8220000000011
EHP C 0250/250/180 AHAFBB000	815EHP0C02502518	25	250	- 15/100	175	1288	219.1	180	G1”	8220000000011
EHP C 0320/250/180 AHAFBB000	815EHP0C03202518	32	250	- 15/100	205	1563	219.1	180	G1”	8220000000011
EHP C 0350/250/180 AHAFBB000	815EHP0C03502518	35	250	- 15/100	210	1681	219.1	180	G1”	8220000000011
EHP C 0400/250/180 AHAFBB000	815EHP0C04002518	40	250	- 15/100	230	1880	219.1	180	G1”	8220000000011
EHP C 0500/250/180 AHAFBB000	815EHP0C05002518	50	250	- 15/100	270	2275	219.1	180	G1”	8220000000011

Available in ASME VIII Division I U STAMPED, in that case

EHP (C) ---> IHP (C)

(2) For other fluids consult Parker

(3) For Fluid group 1 consideration : consult Parker

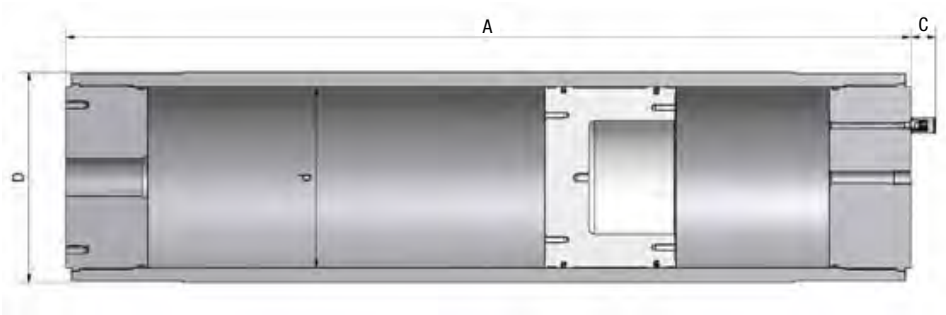

Tel: +45 63 12 83 00 | Email: ps@hymatik.com | www.hymatik.com | Hvidkaervej 27a, DK-5250 Odense SV, Denmark

EHP Series 250 bar, 10 to 150 Litres, Ø 195

Standard version (Carbon steel/seals for mineral oil). Maximum piston speed 2 m/s.
Suitable for mirneral based hydraulic fluids, Vegetable oils, water glycols (2).
According to PED 2014/68/EU , Fluid Group 1or 2 AD2000 (3)

Product, Part numbers, Accessories

Type	Part number	**Effective Gas vol.** Litres	**Max. Working pressure (PS)** bar	**Admissible Accumulator Temperature min/max** (°C)	**Weight** kg	**A max Height** mm	**External øD** mm	**ød** mm	**Std Fluid port**	**C** mm	**Seal Kit**
EHP S 0100-250-195	815EHP0S0102519	10	250	-15/+100	150	645	243	195	G2”	45	8220000000020
EHP S 0200-250-195	815EHP0S0202519	20	250	-15/+100	199	980	243	195	G2”	45	8220000000020
EHP S 0300-250-195	815EHP0S0302519	30	250	-15/+100	249	1315	243	195	G2”	45	8220000000020
EHP S 0400-250-195	815EHP0S0402519	40	250	-15/+100	299	1650	243	195	G2”	45	8220000000020
EHP S 0500-250-195	815EHP0S0502519	50	250		348	1985	243	195	G2”	45	8220000000020
EHP S 0600-250-195	815EHP0S0602519	60	250		398	2320	243	195	G2”	45	8220000000020
EHP S 0700-250-195	815EHP0S0702519	70	250		447	2654	243	195	G2”	45	8220000000020
EHP S 0800-250-195	815EHP0S0802519	80	250		497	2989	243	195	G2”	45	8220000000020
EHP S 0900-250-195	815EHP0S0902519	90	250		546	3324	243	195	G2”	45	8220000000020
EHP S 1000-250-195	815EHP0S1002519	100	250		596	3659	243	195	G2”	45	8220000000020
EHP S 1500-250-195	815EHP0S1502519	150	250		844	5333	243	195	G2”	45	8220000000020

Available in ASME VIII Division I U STAMPED, in that case EHP (S) ---> IHP (S)

(2) For other fluids consult Parker

(3) For Fluid group 1 consideration : consult Parker

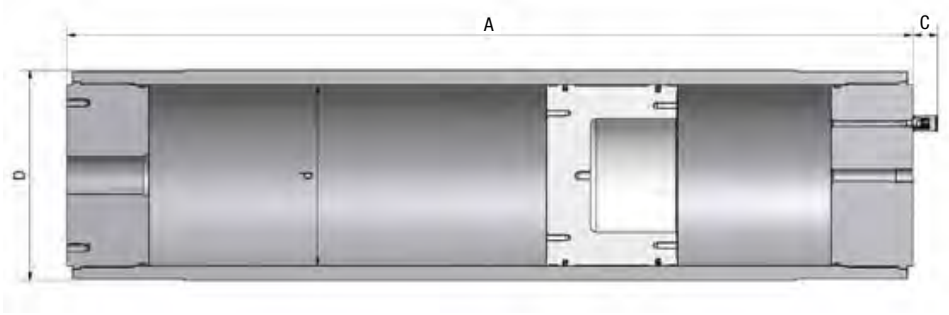

EHP Series 250 bar, 10 to 150 Litres, Ø 200

Standard version (Carbon steel/seals for mineral oil). Maximum piston speed 2 m/s.
Suitable for mirneral based hydraulic fluids, Vegetable oils, water glycols. (2)
According to PED 2014/68/EU, Fluid Group 1or 2 (3) AD2000

Product, Part numbers, Accessories

Type	Part number	**Effective Gas vol.** Litres	**Max. Working pressure (PS)** bar	**Admissible Accumulator Temperature min/max** (°C)	**Weight** kg	**A max Height** mm	**External øD**	**ød** mm	**Std Fluid opening**	**C** mm	**Seal Kit**
EHP C 0100-250-200	815EHP0C0102520	10	250	-15/+100	87	585	230	200	G2”	45	8220000000023
EHP C 0200-250-200	815EHP0C0202520	20	250	-15/+100	110	903	230	200	G2”	45	8220000000023
EHP C 0300-250-200	815EHP0C0302520	30	250	-15/+100	133	1221	230	200	G2”	45	8220000000023
EHP C 0350-250-200	815EHP0C0352520	35	250	-15/+100	144	1321	230	200	G2”	45	8220000000023
EHP C 0400-250-200	815EHP0C0402520	40	250	-15/+100	156	1540	230	200	G2”	45	8220000000023
EHP C 0500-250-200	815EH0C0502520	50	250	-15/+100	178	1858	230	200	G2”	45	8220000000023
EHP C 0750-250-200	815EHP0C0752520	75	250	-15/+100	236	2654	230	200	G2”	45	8220000000023
EHP C 0800-250-200	815EHP0C0802520	80	250	-15/+100	247	2813	230	200	G2”	45	8220000000023
EHP C 0900-250-200	815EHP0C0902520	90	250	-15/+100	270	3131	230	200	G2”	45	8220000000023
EHP C 1000-250-200	815EHP0C1002520	100	250	-15/+100	293	3450	230	200	G2”	45	8220000000023
EHP C 1500-250-200	815EHP0C1502520	150	250	-15/+100	407	5041	230	200	G2”	45	8220000000023

Available in ASME VIII Division I U STAMPED, in that case EHP (C) ---> IHP (C)

(2) For other fluids consult Parker

(3) For Fluid group 1 consideration : consult Parker

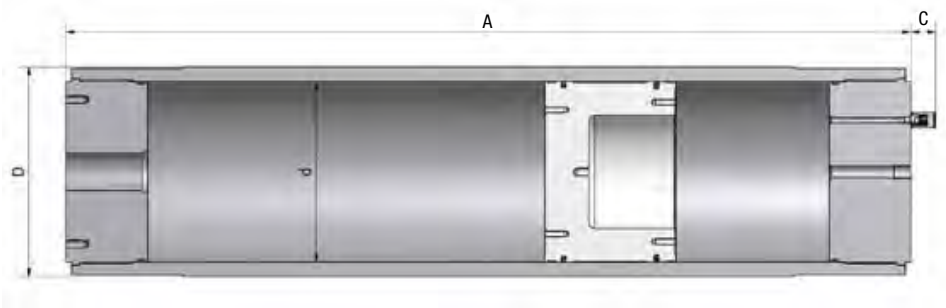

Tel: +45 63 12 83 00 | Email: ps@hymatik.com | www.hymatik.com | Hvidkaervej 27a, DK-5250 Odense SV, Denmark

EHP Series 250 bar, 25 to 200 Litres, Ø 250

Standard version (Carbon steel/seals for mineral oil). Maximum piston speed 2 m/s.
Suitable for mirneral based hydraulic fluids, Vegetable oils, water glycols (2)
According to PED 2014/68/EU, Fluid Group 1or 2 AD2000 (3)

Product, Part numbers, Accessories

Type	Part number	**Effective Gas vol.** Litres	**Max. Working pressure (PS)** bar	**Admissible Accumu-lator Tempera-ture min/max** (°C)	**Weight** kg	**A max Height** mm	**External øD**	**ød** mm	**Std Fluid port**	**C** mm	**Seal Kit**
EHP C 0250/250/250 ALAFBB0000	815EHP0C02502525	25	250	-15/100	260	891	298.5	250	G2”	45	8220000000003
EHP C 0300/250/250 ALAFBB0000	815EHP0C03002525	30	250	-15/100	275	992	298.5	250	G2”	45	8220000000003
EHP C 0350/250/250 ALAFBB0000	815EHP0C03502525	35	250	-15/100	292	1093	298.5	250	G2”	45	8220000000003
EHP C 0400/250/250 ALAFBB0000	815EHP0C04002525	40	250	-15/100	310	1196	298.5	250	G2”	45	8220000000003
EHP C 0450/250/250 ALAFBB0000	815EHP0C04502525	45	250	-15/100	328	1296	298.5	250	G2”	45	8220000000003
EHP C 0500/250/250 ALAFBB0000	815EHP0C05002525	50	250	-15/100	345	1401	298.5	250	G2”	45	8220000000003
EHP C 0550/250/250 ALAFBB0000	815EHP0C05502525	55	250	-15/100	362	1500	298.5	250	G2”	45	8220000000003
EHP C 0600/250/250 ALAFBB0000	815EHP0C06002525	60	250	-15/100	375	1606	298.5	250	G2”	45	8220000000003
EHP C 0650/250/250 ALAFBB0000	815EHP0C06502525	65	250	-15/100	392	1704	298.5	250	G2”	45	8220000000003
EHP C 0700/250/250 ALAFBB0000	815EHP0C07002525	70	250	-15/100	410	1811	298.5	250	G2”	45	8220000000003
EHP C 0750/250/250 ALAFBB0000	815EHP0C07502525	75	250	-15/100	428	1907	298.5	250	G2”	45	8220000000003
EHP C 0800-250-250	815EHP0C0802525	80	250	-15/100	445	2011	298.5	250	G2”	45	8220000000003
EHP C 0900/250/250 ALAFBB0000	815EHP0C09002525	80	250	-15/100	475	2216	298.5	250	G2”	45	8220000000003
EHP C 1000-250-250	815EHP0C1002525	100	250	-15/100	510	2421	298.5	250	G2”	45	8220000000003

Available in ASME VIII Division I U STAMPED, in that case EHP (C) ---> IHP (C)

(2) For other fluids consult Parker

(3) For Fluid group 1 consideration : consult Parker

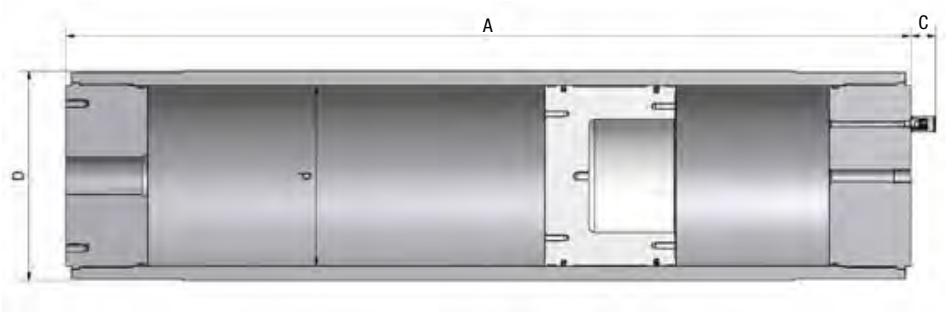

Tel: +45 63 12 83 00 | Email: ps@hymatik.com | www.hymatik.com | Hvidkaervej 27a, DK-5250 Odense SV, Denmark

EHP Series 250 bar, 30 to 500 Litres, Ø 350

Standard version (Carbon steel/seals for mineral oil). Maximum piston speed 2 m/s.
Suitable for mirneral based hydraulic fluids, Vegetable oils, water glycols. (2)
For other fluids consult Parker. According to PED 2014/68/EU , Fluid Group 1or 2 (3) AD2000

Product, Part numbers, Accessories

Type	Part number	**Effective Gas vol.** Litres	**Max. Working pressure (PS)** bar	**Admissible Accumulator Temperature min/max** (°C)	**Weight** kg	**A max Height** mm	**External øD**	**ød** mm	**Std Fluid port**	**C** mm	**Seal Kit**
EHP C 0300-250-350	815EHP0C0302535	30	250	-15/100	445	818	406.4	350	G2”	45	8220000000003
EHP C 0400-250-350	815EHP0C0402535	40	250	-15/100	472	922	406.4	350	G2”	45	8220000000003
EHP C 0500-250-350	815EHP0C0502535	50	250	-15/100	500	1026	406.4	350	G2”	45	8220000000003
EHP C 1000-250-350	815EHP0C1002535	100	250	-15/100	637	1546	406.4	350	G2”	45	8220000000003
EHP C 1500-250-350	815EHP0C1502535	150	250	-15/100	772	2066	406.4	350	G2”	45	8220000000003
EHP C 2000-250-350	815EHP0C2002535	200	250	-15/100	912	2586	406.4	350	G2”	45	8220000000003
EHP C 2500-250-350	815EHP0C2502535	250	250	-15/100	1048	3106	406.4	350	G2”	45	8220000000003
EHP C 3000-250-350	815EHP0C3002535	300	250	-15/100	1185	3626	406.4	350	G2”	45	8220000000003
EHP C 3500-250-350	815EHP0C3502535	350	250	-15/100	1322	4146	406.4	350	G2”	45	8220000000003
EHP C 4000-250-350	815EHP0C4002535	400	250	-15/100	1429	4664	406.4	350	G2”	45	8220000000003
EHP C 4500-250-350	815EHP0C4502535	450	250	-15/100	1565	5183	406.4	350	G2”	45	
EHP C 5000-250-350	815EHP0C5002535	500	250	-15/100	1702	5703	406.4	350	G2”	45	

Available in ASME VIII Division I U STAMPED, in that case EHP (C) ---> IHP (C)

(2) For other fluids consult Parker

(3) For Fluid group 1 consideration : consult Parker

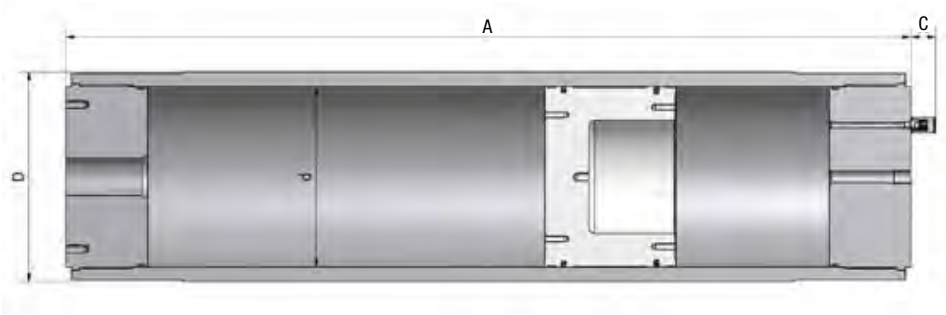

Tel: +45 63 12 83 00 | Email: ps@hymatik.com | www.hymatik.com | Hvidkaervej 27a, DK-5250 Odense SV, Denmark

EHP Series 250 bar, 125 to 1000 Litres, Ø 540

Standard version (Carbon steel/seals for mineral oil) (2)
According to PED 2014/68/EU (3)

Product, Part numbers, Accessories

Type	Part number	**Effective Gas vol.** Litres	**Max. Working pressure (PS)** bar	**Admissible Accumulator Temperature min/max** (°C)	**Weight** kg	**A max Height** mm	**External øD**	**ød** mm	**Std Fluid port**	**C** mm	**Seal Kit**
EHP C 1250-250-540	815EHPOC1252554	125	250	-15/100	1546	1530	650	540	G3”	45	8220000000018
EHP C 2500-250-540	815EHPOC2502554	250	250	-15/100	2070	2001	650	540	G3”	45	8220000000018
EHP C 3000-250-540	815EHPOC3002554	300	250	-15/100	2546	2696	650	540	G3”	45	8220000000018
EHP C 4000-250-540	815EHPOC4002554	400	250	-15/100	3000	3154	650	540	G3”	45	8220000000018
EHP C 5000-250-540	815EHPOC5002554	500	250	-15/100	3322	3472	650	540	G3”	45	8220000000018
EHP C 6000-250-540	815EHPOC6002554	600	250	-15/100	3711	3861	650	540	G3”	45	8220000000018
EHP C 7000-250-540	815EHPOC7002554	700	250	-15/100	4099	4249	650	540	G3”	45	8220000000018
EHP C 8000-250-540	815EHPOC8002554	800	250	-15/100	4487	4637	650	540	G3”	45	8220000000018
EHP C 9000-250-540	815EHPOC9002554	900	250	-15/100	4875	5025	650	540	G3”	45	8220000000018
EHP C 10000-250-540	815EHPOC10002554	1000	250	-15/100	5263	5413	650	540	G3”	45	8220000000018

Available in ASME VIII Division I U STAMPED, in that case EHP (C) ---> IHP (C)

(2) For other fluids consult Parker

(3) For Fluid group 1 consideration : consult Parker

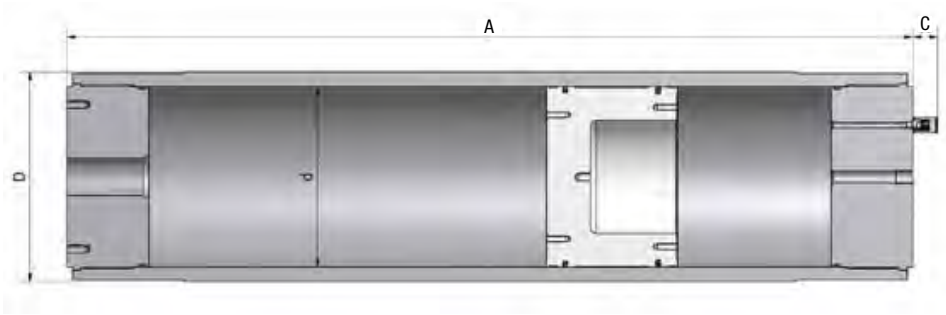

EHP Series 350 bar, 2 to 10 Litres, Ø 100

Standard version (Carbon Steel shell/seals for mineral oils) temperature from / 15° up to 100°C.
Maximum Piston Speed 2 m/s. Suitable for Mineral based hydraulic fluids, Vegetable oils, Water Glycols (2).
According to PED 2014/68/EU, ASME VIII Div.1 Design, Fluid Group 1/2 (3)

Product, Part numbers, Accessories

Type	Part number	**Effective Gas vol.** Litres	**Max. Working pressure (PS)** bar	**Admissible Accumulator Temperature min/max** (°C)	**Weight** kg	**A max Height** mm	**External øD**	**ød** mm	**Std Fluid port**	**C** mm	**Seal Kit**
EHP C 0020-350-100	815EHP0C00023510	2	350	-15/100	37	475	140	100	G1”	45	8220000000024
EHP C 0030-350-100	815EHP0C00033510	3	350	-15/100	45	602	140	100	G1”	45	8220000000024
EHP C 0040-350-100	815EHP0C00023510	2	350	-15/100	37	475	140	100	G1”	45	8220000000024
EHP C 0050-350-100	815EHP0C00033510	3	350	-15/100	45	602	140	100	G1”	45	8220000000024
EHP C 0060-350-100	815EHP0C00063510	6	350	-15/100	67	984	140	100	G1”	45	8220000000024
EHP C 0070-350-100	815EHP0C00073510	7	350	-15/100	75	1111	140	100	G1”	45	8220000000024
EHP C 0080-350-100	815EHP0C00083510	8	350	-15/100	83	1239	140	100	G1”	45	8220000000024
EHP C 0090-350-100	815EHP0C00093510	9	350	-15/100	90	1366	140	100	G1”	45	8220000000024
EHP C 0100-350-100	815EHP0C00103510	10	350	-15/100	98	1493	140	100	G1”	45	8220000000024

Available in ASME VIII Division I U STAMPED, in that case EHP (C) ---> IHP (C)

(2) For other fluids consult Parker

(3) For Fluid group 1 consideration : consult Parker

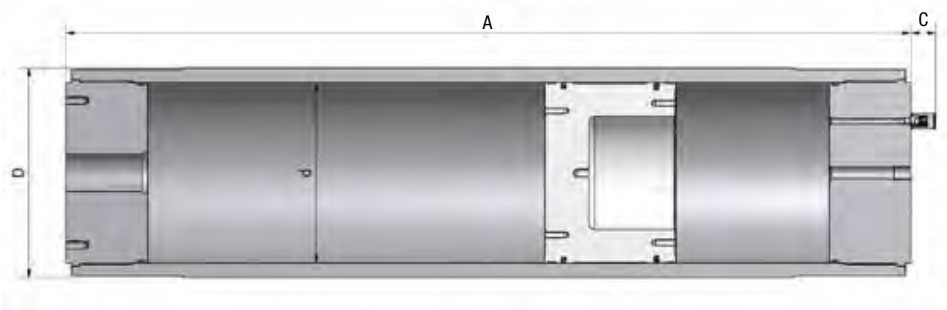

Tel: +45 63 12 83 00 | Email: ps@hymatik.com | www.hymatik.com | Hvidkaervej 27a, DK-5250 Odense SV, Denmark

EHP Series 350 bar, 8 to 50 Litres, Ø 180

Standard version (Carbon Steel shell/seals for mineral oils). Maximum Piston Speed 2 m/s. Suitable for Mineral based hydraulic fluids, Vegetable oils, Water Glycols (2).
According to PED 2014/68/EU .Fluid Group 1/2 AD2000 (3)

Product, Part numbers, Accessories

Type	Part number	Effective Gas vol. Litres	Max. Working pressure (PS) bar	Admissible Accumulator Temperature min/max (°C)	Weight kg	A max Height mm	External øD	ød mm	Std Fluid port	C mm	Seal Kit
EHP C 0080-350-180	815EHP0C0083518	8	350	-15/100	130	646	229	180	G2”	45	8220000000011
EHP C 0100-350-180	815EHP0C0103518	10	350	-15/100	140	724	229	180	G2”	45	8220000000011
EHP C 0150-350-180	815EHP0C0153518	15	350	-15/100	165	920	229	180	G2”	45	8220000000011
EHP C 0200-350-180	815EHP0C0203518	20	350	-15/100	185	1116	229	180	G2”	45	8220000000011
EHP C 0300-350-180	815EHP0C0303518	30	350	-15/100	235	1510	229	180	G2”	45	8220000000011
EHP C 0400-350-180	815EHP0C0403518	40	350	-15/100	285	1902	229	180	G2”	45	8220000000011
EHP C 0500-350-180	815EHP0C0503518	50	350	-15/100	335	2295	229	180	G2”	45	8220000000011

Available in ASME VIII Division I U STAMPED, in that case EHP (C) ---> IHP (C)

(2) For other fluids consult Parker

(3) For Fluid group 1 consideration : consult Parker

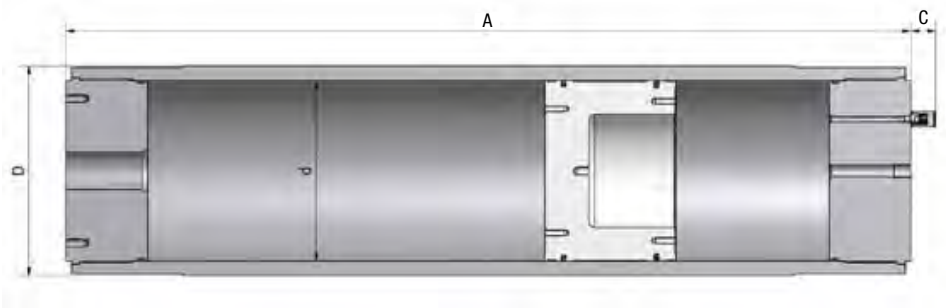

Tel: +45 63 12 83 00 | Email: ps@hymatik.com | www.hymatik.com | Hvidkaervej 27a, DK-5250 Odense SV, Denmark

EHP Series 350 bar, 25 to 200 Litres, Ø 250

Standard version (Carbon Steel shell/seals for mineral oils). Maximum Piston Speed 2 m/s.
Suitable for Mineral based hydraulic fluids, Vegetable oils, Water Glycols (2).
According to PED 2014/68/EU , Fluid Group 1/2, (3) AD2000.
Product, Part numbers, Accessories

Type	Part number	**Effective Gas vol.** Litres	**Max. Working pressure (PS)** bar	**Admissible Accumulator Temperature min/max** (°C)	**Weight** kg	**A max Height** mm	**External øD**	**ød** mm	**Std Fluid port**	**C** mm	**Seal Kit**
EHP C 0250-350-250	815EHP0C0253525	25	350	-15/100	355	914	323.8	250	G2”	45	8220000000003
EHP C 0300-350-250	815EHP0C0303525	30	350	-15/100	380	1016	323.8	250	G2”	45	8220000000003
EHP C 0400-350-250	815EHP0C0403525	40	350	-15/100	435	1220	323.8	250	G2”	45	8220000000003
EHP C 0500-350-250	815EHP0C0503525	50	350	-15/100	485	1423	323.8	250	G2”	45	8220000000003
EHP C 0600-350-250	815EHP0C0603525	60	350	-15/100	510	1627	323.8	250	G2”	45	8220000000003
EHP C 0700-350-250	815EHP0C0703525	70	350	-15/100	595	1830	323.8	250	G2”	45	8220000000003
EHP C 0800-350-250	815EHP0C0803525	80	350	-15/100	645	2035	323.8	250	G2”	45	8220000000003
EHP C 0900-350-250	815EHP0C0903525	90	350	-15/100	700	2238	323.8	250	G2”	45	8220000000003
EHP C 0950-350-250	815EHP0C0953525	95	350	-15/100	725	2340	323.8	250	G2”	45	8220000000003
EHP C 1000-350-250	815EHP0C1003525	100	350	-15/100	750	2442	323.8	250	G2”	45	8220000000003

Available in ASME VIII Division I U STAMPED, in that case EHP (C) ---> IHP (C)

(2) For other fluids consult Parker

(3) For Fluid group 1 consideration : consult Parker

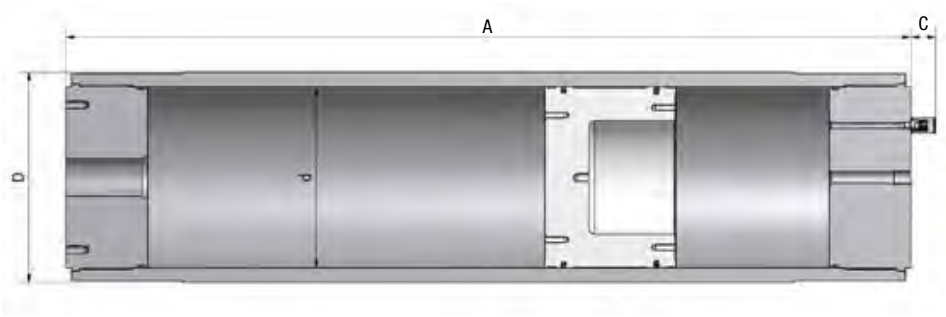

EHP Series 350 bar, 30 to 350 Litres, Ø 350

Standard version (**Carbon Steel** shell/seals for mineral oils) temperature from - 15° up to 100°C. Maximum Piston Speed 2 m/s. Suitable for Mineral based hydraulic fluids, Vegetable oils, Water Glycols (2).
According to PED 2014/68/EU Fluid Group 1/2 (3)
Product, Part numbers, Accessories

Type	Part number	Effective Gas vol. Litres	Max. Working pressure (PS) bar	Admissible Accumulator Temperature min/max (°C)	Weight kg	A max Height mm	External øD	ød mm	Std Fluid port	C mm	Seal Kit
EHP C 0300/350/350	815EHP0C03003535	30	350	-15/100	775	842	457.2	350	G5”	45	8220000000002
EHP C 0400/350/350	815EHP0C04003535	40	350	-15/100	830	946	457.2	350	G5”	45	8220000000002
EHP C 0500/350/350	815EHP0C05003535	50	350	-15/100	885	1050	457.2	350	G5”	45	8220000000002
EHP C 0600/350/350	815EHP0C06003535	60	350	-15/100	940	1154	457.2	350	G5”	45	8220000000002
EHP C 0700/350/350	815EHP0C07003535	70	350	-15/100	995	1259	457.2	350	G5”	45	8220000000002
EHP C 0800/350/350	815EHP0C08003535	80	350	-15/100	1050	1362	457.2	350	G5”	45	8220000000002
EHP C 0900/350/350	815EHP0C09003535	90	350	-15/100	1110	1466	457.2	350	G5”	45	8220000000002
EHP C 1000/350/350	815EHP0C10003535	100	350	-15/100	1165	1570	457.2	350	G5”	45	8220000000002
EHP C 1500/350/350	815EHP0C15003535	150	350	-15/100	1440	2090	457.2	350	G5”	45	8220000000002
EHP C 2000/350/350	815EHP0C20003535	200	350	-15/100	1720	2610	457.2	350	G5”	45	8220000000002
EHP C 2500/350/350	815EHP0C25003535	250	350	-15/100	1995	3130	457.2	350	G5”	45	8220000000002
EHP C 3000/350/350	815EHP0C30003535	300	350	-15/100	2275	3650	457.2	350	G5”	45	8220000000002
EHP C 3500/350/350	815EHP0C35003535	350	350	-15/100	2550	4170	457.2	350	G5”	45	8220000000002

Available in ASME VIII Division I U STAMPED, in that case EHP (C) ---> IHP (C)

(2) For other fluids consult Parker

(3) For Fluid group 1 consideration : consult Parker

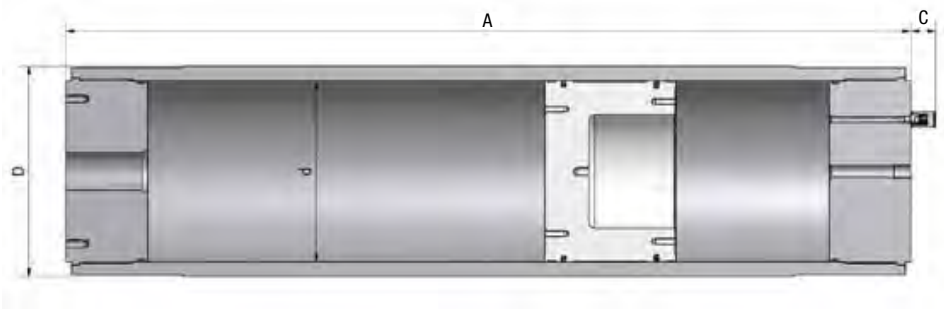

EHP Series 350 bar, 125 to 1000 Litres, Ø 540

Standard Version (Carbon Steel shell) for mineral oils (2) temperature from - 15° up to 100°C
According to PED 2014/68/EU Fluid Group 1/2 (3)
Product, Part numbers, Accessories

Type	Part number	Effective Gas vol. Litres	Max. Working pressure (PS) bar	Admissible Accumulator Temperature min/max (°C)	Weight kg	A max Height mm	External øD	ød mm	Std Fluid port	C mm	Seal Kit
EHP C 1250-350-540	815EHPOC1253554	125	350	-15/+100	1763	1730	730	540	G 3"	45	8220000000018
EHP C 2500-350-540	815EHPOC2503554	250	350	-15/+100	2366	2201	730	540	G 3"	45	8220000000018
EHP C 3000-350-540	815EHPOC3003554	300	350	-15/+100	2913	2896	730	540	G 3"	45	8220000000018
EHP C 4000-350-540	815EHPOC4003554	400	350	-15/+100	3435	3354	730	540	G 3"	45	8220000000018
EHP C 5000-350-540	815EHPOC5003554	500	350	-15/+100	3805	3672	730	540	G 3"	45	8220000000018
EHP C 6000-350-540	815EHPOC6003554	600	350	-15/+100	4253	4061	730	540	G 3"	45	8220000000018
EHP C 7000-350-540	815EHPOC7003554	700	350	-15/+100	4699	4449	730	540	G 3"	45	8220000000018
EHP C 8000-350-540	815EHPOC8003554	800	350	-15/+100	5145	4837	730	540	G 3"	45	8220000000018
EHP C 9000-350-540	815EHPOC9003554	900	350	-15/+100	5591	5225	730	540	G 3"	45	8220000000018
EHP C 10000-350-540	815EHPOC10003554	1000	350	-15/+100	6037	5613	730	540	G 3"	45	8220000000018

Available in ASME VIII Division I U STAMPED, in that case EHP (C) ---> IHP (C)

(2) For other fluids consult Parker

(3) For Fluid group 1 consideration : consult Parker

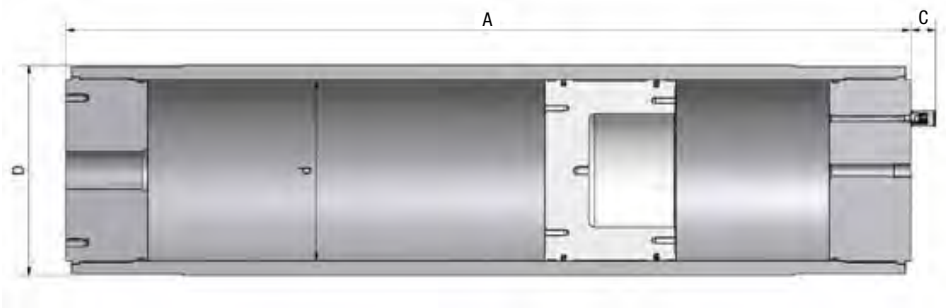

Tel: +45 63 12 83 00 | Email: ps@hymatik.com | www.hymatik.com | Hvidkaervej 27a, DK-5250 Odense SV, Denmark

Tel: +45 63 12 83 00 | Email: ps@hymatik.com | www.hymatik.com | Hvidkaervej 27a, DK-5250 Odense SV, Denmark

Regulations for A/ACP/AP/DC/EHP Piston Accumulators

This table is giving an indication of approval availability for the range of products.
Availability is to be confirmed for each approval, in particular the pressure rating and the allowable working temperatures.

Destination				EUROPE				USA		CHINA		CANADA		
Type *	Volume range (L)	Nominal Internal Ø (mm)	Material (CS or SS)	PED FLUID GROUP 2	PED FLUID GROUP 1	ATEX	Maximum Working Pressure (Bar)	ASME VIII div. 1	Maximum Working Pressure (Psi)	SELO	Maximum Working Pressure (Bar)	CRN	Maximum Working Pressure (Psi)	
A	0,1 to 2 L	50	CS	●	○	○	250 & 350			○		●	207,250,275,345,350 Bar	
A	0,25 to 8 L	75	CS	●	○	○	250 & 350			○		●	207,250,275,345,350 Bar	
A	0,7 to 12 L	100	CS	●	○	○	250 & 350	●	207 Bar	○		●	207,250,275,345,350 Bar	
A	2 to 14 L	125	CS	●	○	○	250 bar			○		●	207,250 Bar	
A	3,8 to 38 L	150	CS	●	○	○	250 & 350			○		●	207,250,275,345,350 Bar	
A	9,5 to 76 L	200	CS	●	○	○	250 bar	●	207 Bar	○		●	207,250,275,345,350 Bar	
ACP	0.02 to 12L	40	CS	●	○	○	260			○		●	260 Bar	
ACP	0.08 to 2 L	50	CS	●	○	○	275			○		●	275 Bar	
ACP	0.25 to 8 L	80	CS	●	○	○	275			○		●	275 Bar	
ACP	0.7 to 12 L	100	CS	●	○	○	275			○		●	275 Bar	
ACP	3 to 40L	150	CS	●	○	○	275			○		●	275 Bar	
AP	6 to 80 L	180	CS	●	○	○	250 & 350			○				
AP	30 to 150L	250	CS	●	○	○	250 & 350			○				
AP	100 to 300L	360	CS	●	○	○	250 & 350			○				
DC	6 to 80 L	180	CS	●	○	○	250 & 350			○				
DC	30 to 150L	250	CS	●	○	○	250 & 350			○				
DC	100 to 300L	360	CS	●	○	○	250 & 350			○				
EHP C	1 to 10 L	100	CS	●	○	○	350 bar	●	(1)	○		●	(2)	
EHP C	8 to 75 L	180	CS	●	○	○	250 bar	●	(1)	○		●	(2)	
EHP C	8 to 75 L	180	CS	●	○	○	350 bar	●	(1)	○		●	(2)	
EHP C	10 to 150 L	200	CS	●	○	○	350 bar	●	(1)	○		●	(2)	
EHP C	20 to 200 L	250	CS	●	○	○	250 bar	●	(1)	○		●	(2)	
EHP C	20 to 200 L	250	CS	●	○	○	350 bar	●	(1)	○		●	(2)	
EHP C	30 to 500 L	350	CS	●	○	○	250 bar	●	(1)	○		●	(2)	
EHP C	30 to 700 L	350	CS	●	○	○	350 bar	●	(1)	○		●	(2)	
EHP C	10 to 150 L	200	CS	●	○	○	250 bar	●	(1)	○		●	(2)	
EHP S	1 to 50 L	140	SS	●	○	○	250 bar	●	(1)	○		●	(2)	
EHP S	10 to 150 L	195	SS	●	○	○	250 bar	●	(1)	○		●	(2)	
EHP(G) C	8 to 75 L	180	CS	●	○	○	250 bar	●	(1)	○		●	(2)	
EHP(G) C	150 to 650 L	540	CS	●	○	○	220 or 250	●	(1)	○		●	(2)	
EHP(G) C	150 to 650 L	540	CS	●	○	○	350 bar	●	(1)	○		●	(2)	
EHP(G) S	60 to 400 L	360	SS	●	○	○	207 bar	●	(1)	○		●	(2)	

● **Available**
○ **Available on request**

(1) Pressure rating different from PED, based on ASME material, possibility of U-STAMP
(2) Based on ASME Certification, whatever Province CRN could be obtained
(3) Based on ASME Certification, whatever Design Verification could be obtained

Tel: +45 63 12 83 00 | Email: ps@hymatik.com | www.hymatik.com | Hvidkaervej 27a, DK-5250 Odense SV, Denmark

	AUSTRALIA			BRAZIL			RUSSIA, KAZAKH-STAN, BELARUS			MARINE - OFFSHORE							
	AS1210	Maximum Working Pressure (Bar)	Maximum Working Pressure (Bar)	NR13	Maximum Working Pressure (Bar)	Maximum Working Pressure (Bar)	CUTR 032/2013	Maximum Working Pressure (Bar)	Maximum Working Pressure Psi (Bar)	DNV MOBILE SHIPS	Maximum Working Pressure (Bar)	BUREAU VERITAS MARINE	Maximum Working Pressure (Bar)	ABS AMERICAN BUREAU OF SHIPPING	Maximum Working Pressure (Bar)	GL GERMANISCHER LLOYD'S	Maximum Working Pressure (Bar)
	●	250															
	●	250															
	●	207,250,275,345,350															
	●	250															
	●	207,250,350															
	●	250															
	●	275															
	●	275															
	●	275															
	○	275															
	●		(3)				●	350	(1)								
	●		(3)				●	250	(1)								
	●		(3)				●	350	(1)								
	●		(3)				●	350	(1)								
	●		(3)				●	250	(1)								
	●		(3)				●	350	(1)								
	●		(3)				●	250	(1)								
	●		(3)				●	350	(1)								
	●		(3)				●	250	(1)								
	●		(3)				●	250	(1)								
	●		(3)				●	250	(1)								
	●		(3)				●	250	(1)								
	●		(3)				●	350	(1)								
	●		(3)				●	207	(1)								

Regulations for EHP/EHP2 Piston Accumulators

This table is giving an indication of approval availability for the range of products.
Availability is to be confirmed for each approval, in particular the pressure rating and the allowable working temperatures.

Destination				EUROPE				USA		CHINA		CANADA		
Type *	Volume range (L)	Nominal Internal Ø (mm)	Material (CS or SS)	PED FLUID GROUP 2	PED FLUID GROUP 1	ATEX	Maximum Working Pressure (Bar)	ASME VIII div. 1	Maximum Working Pressure (Psi)	SELO	Maximum Working Pressure (Bar)	CRN	Maximum Working Pressure (Psi)	
EHP/EHP2	0,15 to 4L	50	CS	●	○	○	360			○				
EHP/EHP2	1,5 to 4L	50	CS	●	○	○	250			○				
EHP/EHP2	1,5L to 4L	80	CS	●	○	○	250			○				
EHP/EHP2	0,8 to 15L	100	CS	●	○	○	250			○				
EHP/EHP2	0,5 to 15L	100	CS	●	○	○	350			○				
EHP/EHP2	3,6L	125	CS	●	○	○	350			○				
EHP/EHP2	4 to 25L	140	CS	●	○	○	250			○				
EHP/EHP2	4 to 25L	140	CS	●	○	○	310			○				
EHP/EHP2	10 to 45L	180	CS	●	○	○	250			○				
EHP/EHP2	10 to 100L	180	CS	●	○	○	350			○				
EHP/EHP2	10 to 55L	200	CS	●	○	○	250			○				
EHP/EHP2	10 to 150L	200	CS	●	○	○	350			○				
EHP/EHP2	50 to 220L	250	CS	●	○	○	250			○				
EHP/EHP2	50 to 220L	250	CS	●	○	○	350			○				
EHP/EHP2	100 to 640L	360	CS	●	○	○	250			○				

● **Available**
○ **Available on request**

(1) Pressure rating different from PED, based on ASME material, possibility of U-STAMP
(2) Based on ASME Certification, whatever Province CRN could be obtained
(3) Based on ASME Certification, whatever Design Verification could be obtained

Tel: +45 63 12 83 00 | Email: ps@hymatik.com | www.hymatik.com | Hvidkaervej 27a, DK-5250 Odense SV, Denmark

	AUSTRALIA			BRASIL			RUSSIA, KAZAKHSTAN, BELARUSSIA			MARINE - OFFSHORE							
	AS1210	Maximum Working Pressure (Bar)	Maximum Working Pressure (Bar)	NR13	Maximum Working Pressure (Bar)	Maximum Working Pressure (Bar)	CUTR 032/2013	Maximum Working Pressure (Bar)	Maximum Working Pressure Psi (Bar)	DNV MOBILE SHIPS	Maximum Working Pressure (Bar)	BUREAU VERITAS MARINE	Maximum Working Pressure (Bar)	ABS AMERICAN BUREAU OF SHIPPING	Maximum Working Pressure (Bar)	GL GERMANISCHER LLOYD'S	Maximum Working Pressure (Bar)
	○			N/A			○	360		-		○		●	360	-	
	○			N/A			○	250		●	250	○		●	250	●	250
	○			N/A			○	250		●	250	○		●	250	●	250
	○			N/A			○	250		●	250	○		●	250	●	250
	○			N/A			○	350		●	350	○		●	350	●	350
	○			N/A			○	350		○		○		○		○	
	○			N/A			○	250		●	250	○		●	250	●	250
	○			N/A			○	310		-		○		●	310	-	
	○			●		250	○	250		●	250	○		●	250	●	250
	○			●		250	○	350		●	350	○		●	350	●	350
	○			●		250	○	250		●	250	○		●	250	●	250
	○			●		350	○	350		●	350	○		●	350	●	350
	○			●		250	○	250		●	250	○		●	250	●	250
	○			●		250	○	350		●	350	○		●	350	●	350
	○			●		250	○	250		●	250	○		●	250	●	250

up to 3000 bar: EHP Pistons

Carbon and Stainless Steel

Benefits

- **Experienced Technical Support Team** to help develop the most effective and efficient product for your system/application.
- **Materials to suit the most demanding environments.** Parker Olaer offer a choice of materials from metallic and elastomeric components to suit the operating environment e.g. chemical compatibility, environment conditions (topside or subsea) and temperature extremes.
- **International design codes and regulations.**
- **Meeting the highest pressure requirements.** This high pressure piston range can provide pressures of up to 2500 bar (more than 36,000 psi).
- **Bespoke Designs to suit your needs.** Parker Olaer pistons can be designed and built to your specified criteria and can therefore meet any space limitations you may have.



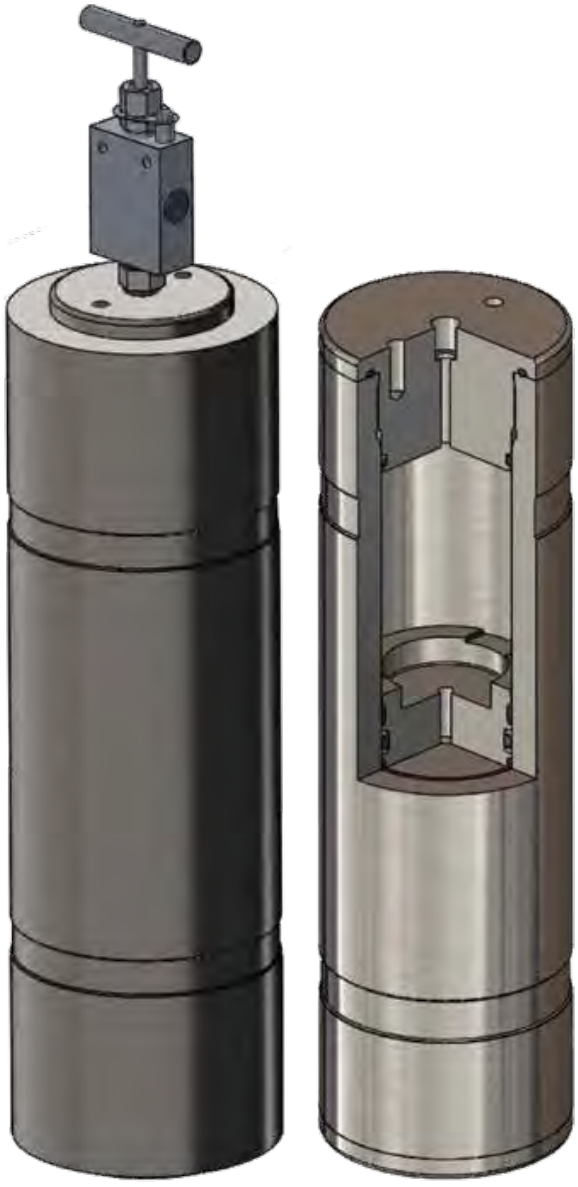

Tel: +45 63 12 83 00 | Email: ps@hymatik.com | www.hymatik.com | Hvidkaervej 27a, DK-5250 Odense SV, Denmark

High Pressure, up to 3000 bar: General Information

Technical Characteristics:

Capabilities
Parker ACDE Piston Accumulators are available in any capacity up to 1350 litres. Capacity is only limited by pressure and available materials. Our standard range is 1 litre up-to and including 150 litres. All units are made to order, and can be custom engineered to suit specific space restrictions.

Pressure
Piston Accumulators are available in any pressure between 5 bar and 3000 bar. The pressure rating is dependant on capacity and/or available materials.

Materials
Our units are available in a variety of materials such as Carbon steel, Stainless steel, Duplex or Super Duplex steels and Aluminium. All come with a choice of material certification options.

Design
Vessels will be in accordance with the PED 97/23/EC for use in Europe and designed to PD5500. Optional 3rd party witness (eg. Lloyds) available. Other design codes can be considered for example ASME VIII Div 1.

Fluid End Connections
To suit customer requirements – e.g. NPT, BSP, Autoclave type or SAE/ASME flanged.

Gas End Connections
To suit customer requirements – e.g. NPT, BSP, Autoclave type or SAE/ASME flanged. Transfer barrier ports, Gas Charging valves (brass and stainless) Gas pressure relief devices e.g. Burst discs and Fuse plugs.

Seals
For low or high temperature applications. Materials typically Nitrile, PTFE, Viton, EPDM and others.

Piston Position Indicators

Carbon Steel Options:
- Tailrod – magnetic operation with visual flapper or magnetic indicator switch.
- Bent tube Indicator - magnetic operation with visual flapper or magnetic indicator switch.
- Tailrod – operating a cam/switch.
- Proximity switch

Stainless Steel Options:
- Piston Magnet - magnetic operation with visual flapper or magnetic indicator switch
- Proximity switches

Carbon Steel Units

Wide range of product sizes we are available. For further information please contact a member of our sales team.

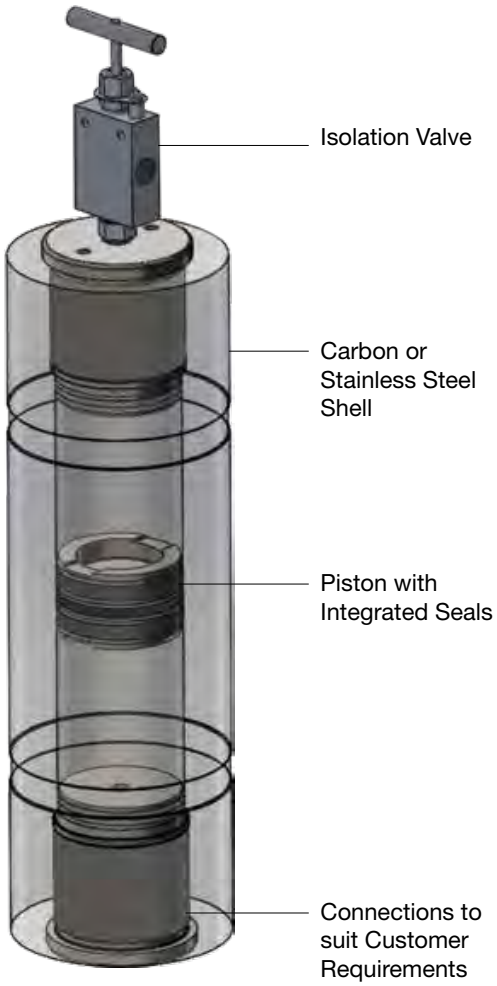

Tel: +45 63 12 83 00 | Email: ps@hymatik.com | www.hymatik.com | Hvidkaervej 27a, DK-5250 Odense SV, Denmark

Raising the bar on piston design

Fully flexible design capacity allowing us to design products to suit your applications.

This is a small selection of the pistons we commonly supply however please contact us for other options and prices.

Available on request

Standard product

Carbon Steel Pistons

Bar	Internal Diameter (Ø d)											
	50	80	90	100	115	125	160	180	200	250	360	500
200	■	■	■	■	■	■	■	■	■	■	■	■
350	■	■	■	■	■	■	■	■	■	■	■	
500	■	■	■	■	■	■	■	■	■	■		
750	■	■	■	■	■	■	■	■	■	■		
1000	■	■	■	■	■	■	■	■	■	■		
1250	■	■	■	■	■	■	■	■	■	Contact Parker Olaer		
1500	■	■	■	■	■	■	■	■	■			
1750	■	■	■	■	■	■	■	■	■			
2000	■	■	■	■	■	■	■	■	■			
2250	■	■	■	■	■	■	■	■	■			
2500	■	■	■	■	■	■	■	■	■			

Stainless Steel (17/4) Pistons

Bar	Internal Diameter (Ø d)											
	50	80	90	100	115	125	160	180	200	250	360	500
200	■	■	■	■	■	■	■	■	■	■	■	■
350	■	■	■	■	■	■	■	■	■	■	■	
500	■	■	■	■	■	■	■	■	■	■		
750	■	■	■	■	■	■	■	■	■	■		
1000	■	■	■	■	■	■	■	■	■	■		
1250	■	■	■	■	■	■	■	■	■	Contact Parker Olaer		
1500	■	■	■	■	■	■	■	■	■			
1750	■	■	■	■	■	■	■	■	■			
2000	■	■	■	■	■	■	■	■	■			
2250	■	■	■	■	■	■	■	■	■			
2500	■	■	■	■	■	■	■	■	■			

Stainless Steel (AISI 316) Pistons

Bar	Internal Diameter (Ø d)											
	50	80	90	100	115	125	160	180	200	250	360	500
200	■	■		■		■	■	■	■	■		
350	■	■		■		■	■	■	■	■		
500	■	■		■		■	■	■	■			
750	■	■		■								
1000	■	■		■		Contact Parker Olaer						
1250	■											
1400	■											

Duplex Pistons

Bar	Internal Diameter (Ø d)											
	50	80	90	100	115	125	160	180	200	250	360	500
200		■		■		■	■		■	■		
350		■		■		■	Contact Parker Olaer		■	■		
500				■		■			■	■		
750				■		■			■	■		
1000									■	■		

Super Duplex Pistons

Bar	Internal Diameter (Ø d)											
	50	80	90	100	115	125	160	180	200	250	360	500
200			■	■	■	■	■		■	■		
350			■	■	■	■	■		■	■		
500			■	■	■	■	■		■	■		
750			■	■	■	■	■		■	■		
1000			■	■	Contact Parker Olaer				■	■		
1250				■								





aerospace
climate control
electromechanical
filtration
fluid & gas handling
hydraulics
pneumatics
process control
sealing & shielding





SBV3 Series
Pulsation Damper

Silicone Filled Bladder Accumulator - up to 40 bar



Parker OLAER

ENGINEERING YOUR SUCCESS.

Tel: +45 63 12 83 00 | Email: ps@hymatik.com | www.hymatik.com | Hvidkaervej 27a, DK-5250 Odense SV, Denmark

Description

The SBV3 pulsation damper is specially designed for installation on low pressure fuel systems, typically in Marine and Power Generation applications, to attenuate pressure pulses (up to 40 bar/ 2.5 Litres).

The patented technology offered by the SBV3 pulsation damper removes all risks and maintenance associated with pressurized gas and no precharge is required as Silicone particles are used instead. This third generation of damper integrates the brand new S2 rubber mix which offers improved longevity and efficiency and the new stem adapter which provides greater reliability.

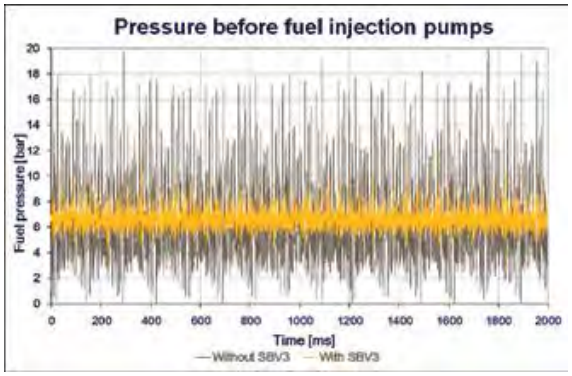

Typical Installation Example

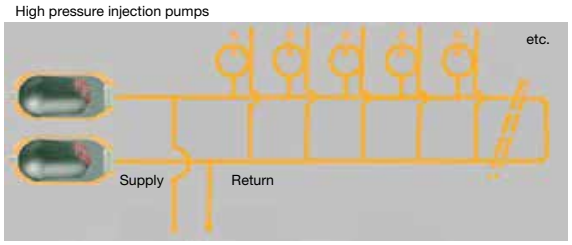

Benefits

- **Longevity: The new generation of SBV offers enhanced longevity, delivering stable performance levels 35% longer than the SBV2. The new stem adapter reduces the risk of leakage; 2 to 3 times lower than the SBV2 and an improved strainer prevents silicone parts from entering the fuel system.**
- **Easy to install and use: The SBV3 is installed on the diesel engine inlet outlet or outlet fuel lines. The bottom side is connected to the fuel system and the external connection on the top side, to a spill detection system. No additional fluids or gas precharge are required and its lightweight construction makes it easier to handle and transport.**
- **Improved safety: The new stem adapter with 2 sealing zones significantly reduces the risk of hot fluid contact during inspection and maintenance. Its high pressure safety factor and enhanced leak prevention also provide improved safety features.**
- **Efficiency and Reliability: Offering a product lifetime of 35% longer than its former model the SBV3 offers better value for money and peace of mind. A robust shell design and improved stem adapter optimize this product for high stress and fatigue.**
- **Extending System Life – Cost Saving: The reduction of pressure peaks in the fuel system will prevent damage to pumps/instrumentation and reduce the costs associated with system maintenance and repair.**

Approvals
CE or PED 2014/68/EU Article 4.3
BV Marine
Other approvals available on request (ABS, DNV, GL, NKK).



1. Silicone Port	Can be connected to drain pan through spill detection system or valve
2. Shell	Material: Carbon Steel Maximum working pressure: 40 bar Nominal Capacities: 0.5, 1 or 2.5 Litres
3. Bladder	Mix compound S2 type HBBR; specially developed to be compatible with fuel types HFO & MDO and high temperature environments.
4. Fluid port	With reinforced strainer, G2” compatible with a large range of adaptors and manifolds

SBV3 Series: How to select the right SBV3

Two pieces of information are required to select the most suitable SBV3 model for your system:

- F(Hz): Fundamental frequency of pulsations
- Pm (bar): Mean pressure in the circuit

To select:

1. Using the adjacent diagram, find the fundamental frequency and the mean pressure.
2. Select the right model in the shaded area.

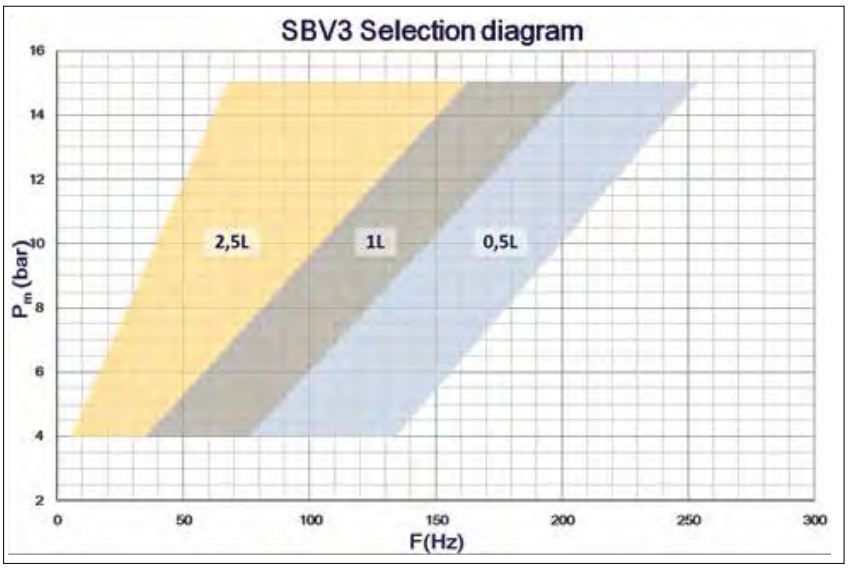

SBV3 Series: How to order

SBV3 0.5 40 / 00 A S2 K M 1 00

Product Type
SBV3 : Silicon low pressure bladder

Volume in L (up to 4 Characters)
0.5 - for 0,5 Litre
1.0 - for 1,0 Litres
2.5 - for 2.5 Litres

Maximum Working Pressure According to CE*
40 - for 40 bar max working pressure

Approvals*
00 - According to the PED2014/68/EU, article 4.3
11 - According CE & BV Marine
13 - According PED article 4.3 & BV Marine
23 - According PED 2014/68/EU Art 4.3 + ABS
41 - According PED 2014/68/EU + ABS

*Please consult Parker for other approvals

Material (Shell and Fluid Port)
A - All parts in carbon steel with Epoxy paint for shell only

Bladder Mix
S2 - Compound S2 type HNBR

Fluid Port Configuration
K - G2" according to ISO228

Silicone Port Configuration
L - No gas valve - pipe connection Ø10mm
M - No gas valve - pipe connection Ø8mm

Fluid Type
1 - Fluid Type 1 CE Fluid Group 1

Special
00 - No Special features or configuration
ZZ - Special configuration or several options

Tel: +45 63 12 83 00 | Email: ps@hymatik.com | www.hymatik.com | Hvidkaervej 27a, DK-5250 Odense SV, Denmark

Technical Specifications

Pressure
Maximum working pressure: (PS) = 40 bar

Operating pressure (OP): 3 to 15 bar.

Pre-charge pressure
No precharge pressure requested.

Bladder filled with silicone particles.

Material of construction
Shell in forged carbon steel with epoxy paint Bladder mix S2 HNBR.

Temperature range
Standard construction: -10 to +150°C.

System fluids
Suitable for diesel oil and heavy oil (MDO&HFO)

Product approved for fluid group 1 according to PED

Approvals

Compliance PED : article 4.3* or CE

BV Marine
Other approvals available on request
(ABS, DNV, GL, NKK)

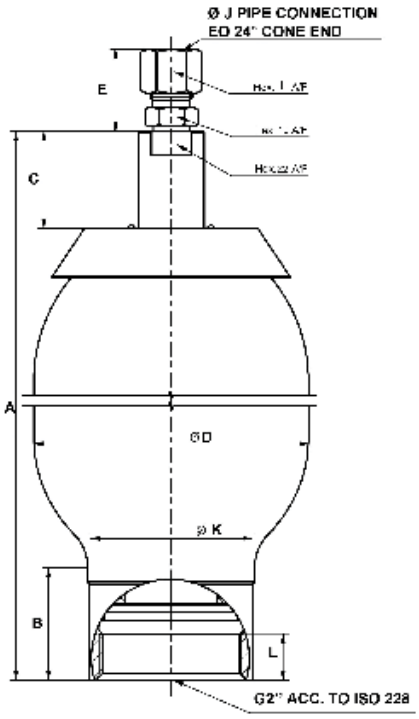

Installation

Vertical (fluid port on bottom side), preferable to horizontal.

User manual is delivered with the damper.

Regulation code		/00	/13 /11	/23 /41	Max. Working pressure (PS) bar	Weight kg	Dimensions (mm)									
Volume in Litres	Max. Working Pressure (bar)	PED 2014/68/EU Article 4.3	/11 : PED&BV MARINE /13 : PED Article 4.3& BV MARINE	/41 : PED&ABS /23 : PED Article 4.3&ABS			A max Height	B	C	ØD	Ød	E	ØF	H	I	Ø J
0.5	40	SBV3 0.5-40/00-AS2KM-100 092686011S2			40	3	261	46	40	90	225	28	8	13	8	17
1	40		SBV3 1.0-40/13-AS2KL-100 092390011S2		40	6	289	47	40	116	225	34	10	13	10	22
2.5	40		SBV3 2.5-40/11-AS2KL-100 092391011S2		40	10	463	47	40	116	225	34	10	13	10	22

The dimensions given in the table above are in mm and the manufacturing tolerances are not taken into account

Patents applied in most major industrial countries.

PED2014/68/EU Article 4.3

Accessories



Manifold :

- DIN
- JIS
- ANSI

and substitute existing solution in SAE 3000 psi



Clamps :

Temperature 150°C

Construction in Zinc plated – Silicon rubber

SBV3-E95

SBV3-A114

Other Accessories :

- Pipe Kit's for monitoring the Bladder up to 150°C
- Ball valve – Connector – clamps
  - in Carbon Steel coating CF
- Pipe :
  - Carbon steel coating CF
  - Stainless steel 1.4571
  - Copper (pipe)

For more information plesae contact your local Parker sales office.

Notes

Tel: +45 63 12 83 00 | Email: ps@hymatik.com | www.hymatik.com | Hvidkaervej 27a, DK-5250 Odense SV, Denmark





aerospace
climate control
electromechanical
filtration
fluid & gas handling
hydraulics
pneumatics
process control
sealing & shielding





APD,BPD,CPD,DPD Series Pulsation Damper

Stainless Steel, up to 690 bar



Parker OLAER

ENGINEERING YOUR SUCCESS.

Description

Parker Pulsation Dampers are available in stainless steel (up to 690 bar) for applications demanding a stronger and more durable product.

Parker Pulsation Dampers are used to minimise pump pulses in systems with positive displacement pumps or other applications whereby a pulse is generated.

The Parker Accumulator Sizing Software is one of the most sophisticated simulation software programs available, allowing for temperature and flow characteristics, intuitive Windows format and easy to use! Download our sizing software from www.Parker.com/acde.



Stainless Steel Pulsation Damper

Features/Benefits

- **Cost Savings - Pulsation Dampers can reduce pipe work and instrumentation damage as they provide:**
  - **Removal of pressure spikes, Protection of pipe work and instrumentation, provision of continuous steady flow and reduction of system noise and cavitation.**
- **Accurate dispersal of pumped products**
- **Improved reliability and accuracy of system instrumentation**
- **International Certification**
- **Bespoke designs tailored to customer requirements**

Markets

- **Oil & Gas**
- **Industrial**
- **Industrial and Chemical Processing**

Applications

- **Dosing Pump Systems**
- **Chemical Injection Skids/Systems**
- **Test Equipment**



Markets & Applications

Ideal for Oil & Gas and Industrial installation

Oil & Gas

- Chemical Injection Skids/Systems

Industrial

- Test Equipment

Petrochemical

- Dosing Pump Systems





images courtesy of
www.CalderLtd.com

Main Features

	Stainless Steel (316)* Pulsation Dampers	Polypropylene Pulsation Dampers
Maximum Pressure	690 bar **	10 bar
Maximum Volume	5 Litres	2 Litres ***
Design	PD55000 ASME VIII Div 1 ASME VIII Div 1 U Stamp	Sound Engineering Practice (SEP)
Flanged Options	Flanged options available	No flanged options available
Maintenance	Repairable	Non-repairable

* Other materials available on request e.g. duplex, super duplex, inconel.

** Higher pressures available on request

*** Units up to 1 litre stocked as standard

Stainless Steel Pulsation Dampers

Main Features

1 Shell
CE certified in accordance with the PED 2014/68/EU where applicable. Manufactured from high grade 316 Stainless Steel, other materials available.

- Nominal capacities 0.1 litre to 5 litres.
- Working pressures of up to 690 bar, higher pressures available on request.
- Wide range of separator materials available
- Designed to PD5500 or ASME VIII Div 1.
- U Stamp is available as an option.

2 Label
Vessel information is stamped directly on shell. Stainless Steel nameplates are available at an extra cost.

3 Material Certification
Material certifications are available to EN10204 3.1
NACE MR0175 compliance is available on request.

4 Finish
Natural finish, unpainted as standard. Special paints available.

5 Fluid Port
A large variation of threaded or flanged options are available. For connection options please see page 149.

6 Safety
All gas-loaded pulsation dampers are pressurised vessels and it is recommended that safety consideration be given to the application in which they are used. A relief valve should always be fitted to the hydraulic system with the option of a burst disc to protect the pulsation damper. See Installation and Servicing data sheet for information regarding installation of pulsation damper.

7 Pressure Testing
A hydrostatic pressure test is carried out on all our pulsation dampers shells during the manufacturing process. We can carry out additional pressure testing witnessed by a specified Inspection Authority and/or customer as an optional extra if required.

We can also carry out a hydro-pneumatic pressure test on the complete assembly as an optional extra if required. Again this can be witnessed by a specified inspection authority and/or customer.

8 Accessories
A complete range of damper charging equipment is available from Parker Olaer.

9 Spare Parts
Available on request.



Tel: +45 63 12 83 00 | Email: ps@hymatik.com | www.hymatik.com | Hvidkaervej 27a, DK-5250 Odense SV, Denmark

Stainless Steel: How to order

Damper Type	Nominal Volume (Litres)		Bladder Material		Fluid End Connection
APD	001	—	0	—	0001

Code: Type
APD : Standard pressure
BPD : High pressure
CPD : ASME standard pressure
DPD : ASME high pressure
EPD : 'Special' alternative materials or high pressures
CPDU: ASME U Stamped Standard Pressure
DPDU: ASME U Stamped High Pressure

Code: Litres
001 : 0.1
025 : 0.25
050 : 0.5
100 : 1
200 : 2
300 : 3
500 : 5

Code: Material
0 : Nitrile (NBR)
A : EPDM
6 : Viton (FKM)

Other bladder materials are available on request

Code: Fluid end connection
0001 : 1/2" BSP (F)
0002 : 3/4" BSP (F)
0003 : 1" BSP (F)
0004 : 1 1/2 BSP (F)
0005 : 1/2" NPT (F)
0006 : 2" BSP (F)
0007 : 3/4" NPT (F)
0024 : 1" NPT (F)
0026 : 1/4" NPT(F)
0042 : 2" NPT(F)
0112 : 3/8" NPT(F)

0010 : 1/2" 150 lb R/F Flange
0011 : 1"150 lb R/F Flange
0012 : 1/2" 300 lb R/F Flange
0013 : 1" 300 lb R/F Flange
0016 : 2" 150 lb R/F Flange
0032 : 2" 300 lb R/F Flange
0070: 1/2"1500LB RTJ Flange
0072 : 1" 1500LB RTJ Flange
0088 : 1/2"2500lb RTJ Flange

Other thread and flange options available on request



Tel: +45 63 12 83 00 | Email: ps@hymatik.com | www.hymatik.com | Hvidkaervej 27a, DK-5250 Odense SV, Denmark

Capacities and Dimensions

APD Range (PD5500)

	Volume (litres)						
	0.1	**0.25**	**0.5**	**1**	**2**	**3**	**5**
Height (mm)	200	220	242	270	405	425	437
Outside Diameter (mm)	60	76	94	127	127	153	170
Weight (kg)	2.7	4.5	7.4	15	20	31	33
Design Pressure (bar)	**350**	**300**	**250**	**180**	**180**	**250**	**120**

BPD Range (PD5500)

	Volume (litres)						
	0.1	**0.25**	**0.5**	**1**	**2**	**3**	**5**
Height (mm)	215	236	272	290	426	448	472
Outside Diameter (mm)	76	102	127	146	146	170	190
Weight (kg)	5.4	12	21	27	37	52	55
Design Pressure (bar)	**690**	**690**	**690**	**450**	**450**	**430**	**300**

CPD Range (ASME VIII Div 1)*

	Volume (litres)						
	0.1	**0.25**	**0.5**	**1**	**2**	**3**	**5**
Height (mm)	200	220	242	270	405	425	437
Outside Diameter (mm)	60	76	94	127	127	153	170
Weight (kg)	2.7	4.5	7.4	15	20	31	33
Design Pressure (bar)	**300**	**250**	**170**	**140**	**140**	**120**	**95**

DPD Range (ASME VIII Div 1)*

	Volume (litres)						
	0.1	**0.25**	**0.5**	**1**	**2**	**3**	**5**
Height (mm)	215	236	272	290	426	448	472
Outside Diameter (mm)	76	102	127	146	146	170	190
Weight (kg)	5.4	12	21	27	37	52	55
Design Pressure (bar)	**460**	**420**	**400**	**350**	**350**	**300**	**207**



Note: Dimensions are based on current stock and are subject to change without prior notice.

- *'U' Stamp options are also available at extra cost. Request price if required.
- APD/CPD models have brass gas valves
- BPD/DPD models have stainless steel gas valves

Tel: +45 63 12 83 00 | Email: ps@hymatik.com | www.hymatik.com | Hvidkaervej 27a, DK-5250 Odense SV, Denmark

Flanged Fluid End Options

		Nominal Flange Sizes					
	Dimensions (mm)	½"	¾"	1"	1 ¼"	1 ½"	2
150lb	Diameter	88.9	98.4	107.9	117.5	127	152.4
	Length "L"	47.6	52.4	55.6	57.1	61.9	63.5
	Weight (kg)	0.5	0.7	1.1	1.5	1.8	2.7
300lb	Diameter	95.2	117.5	123.8	133.4	155.6	165.1
	Length "L"	52.4	57.1	61.9	65.1	68.3	69.8
	Weight (kg)	0.8	1.3	1.7	2.2	3.2	3.6
600lb	Diameter	95.2	117.5	123.8	133.4	155.6	165.1
	Length "L"	52.4	57.1	61.9	66.7	69.8	73
	Weight (kg)	0.9	1.5	1.9	2.6	3.3	4.7
900lb	Diameter	120.6	130.2	149.2	158.7	177.8	215.9
	Length "L"	60.3	69.8	73	73	82.5	101.6
	Weight (kg)	1.9	2.6	3.8	4.4	6.1	11.1
1500lb	Diameter	120.6	130.2	149.2	158.7	177.8	215.9
	Length "L"	60.3	69.8	73	73	82.5	101.6
	Weight (kg)	1.9	2.6	3.8	4.4	6.1	11.1
2500lb	Diameter	133.3	139.7	158.8	184.2	203.2	235
	Length "L"	73	79	89	95	111	127
	Weight (kg)	3.6	4.1	5.9	9	13	19

Note: In most cases the fitting of a flange will de-rate the design pressure of the damper if in any doubt please refer to flange specification ANSI B16.5 for the maximum working pressures.

These dimensions are weights are to be added to the damper dimensions if a flange is required.

Note: Dimensions are based on current stock and are subject to change without prior notice.

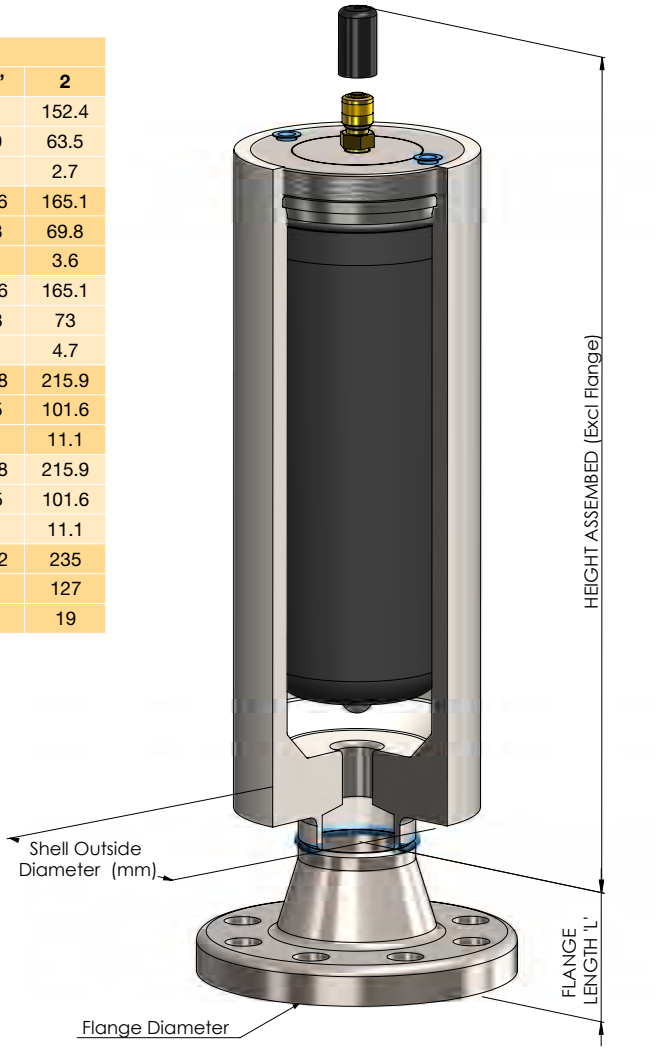

Tel: +45 63 12 83 00 | Email: ps@hymatik.com | www.hymatik.com | Hvidkaervej 27a, DK-5250 Odense SV, Denmark

Pulsation damper APD Series

Standard version (Stainless **Steel** shell). According to PED 2014/68/EU
Product , Part numbers, Accessories

Standard pressure with brass gas valve

Volume (L)	Type	Connection	Nitrile Version	EPDM Version	Viton Version
			Part Number	Part Number	Part Number
0.1	PULSATION DAMPER 0.1L 1/2BS	1/2" BSP (F)	APD001-0-0001	APD001-A-0001	APD001-6-0001
	PULSATION DAMPER 0.1L 1/2N	1/2" NPT (F)	APD001-0-0005	APD001-A-0005	APD001-6-0005
	PULSATION DAMPER 0.1L 3/4B	3/4" BSP (F)	APD001-0-0002	APD001-A-0002	APD001-6-0002
	PULSATION DAMPER 0.1L 3/8" NPT	3/8" NPT (F)	APD001-0-0112	APD001-A-0112	APD001-6-0112
	PULSATION DAMPER 0.1L 1/2B	1/2" BSP (F)	APD001-0-0215	APD001-A-0215	APD001-6-0215
	PULSATION DAMPER 0.1L	1/2" NPT (F)	APD001-0-0005EX	APD001-A-0005EX	APD001-6EX
	PULSATION DAMPER 0.1L 1/2"	1/2" 150LB RF	APD001-0-0010Ex	APD001-A-0010Ex	APD001-6-0010Ex
	PULSATION DAMPER 0.1L 1/2"	1/2" 2500LB RF	APD001-0-0239	APD001-A-0239	APD001-6-0239
	PULSATION DAMPER 0.1L 3/4"	3/4" NPT (F)	APD001-0-0332	APD001-A-0332	APD001-6-0332
	PULSATION DAMPER 0.1L 3/8"	3/8" NPT (F)	APD001-0-0333	APD001-A-0333	APD001-6-0333
	SPARES PARTS 0.1L		APD001-0-EX	APD001-AEX	APD001-6EX
	BLADDER KIT 0.1L		APD001-0	APD001-A	APD001-6
0.25	PULSATION DAMPER 0.25L 1/2	1/2" BSP (F)	APD025-0-0001	APD025-A-0001	APD025-6-0001
	PULSATION DAMPER 0.25L 1/2	1/2" NPT (F)	APD025-0-0005	APD025-A-0005	APD025-6-0005
	PULSATION DAMPER 0.25L EX	1/2" NPT (F)	APD025-0-0005EX	APD025-A-0005EX	APD025-6-0005EX
	PULSATION DAMPER 0.25L 1" 2500	1" 2500LB RTJ	APD025-0-0064	APD025-A-0064	APD025-6-0064
	PULSATION DAMPER 0.25L 1/2" 2500	1/2" 2500LB RTJ	APD025-0-0088	APD025-A-0088	APD025-6-0088
	PULSATION DAMPER 0.25L 3/4	3/4" NPT (F)	APD025-0-0332	APD025-A-0332	APD025-6-0332
	PULSATION DAMPER 0.25L 3/8" NPT	3/8" NPT (F)	APD025-0-0112	APD025-A-0112	APD025-6-0112
	PULSATION DAMPER 0.25L 1/2	1/2" NPT (F)	APD025-0-0331	APD025-A-0331	APD025-6-0331
	SPARES KIT 0.25L ATEX		APD025-0Ex	APD025-AEX	APD025-6Ex
	BLADDER KIT 0.25L		APD025-0	APD025-A	APD025-6
0.5	PULSATION DAMPER 0.5L 3/4"	3/4" NPT (F)	APD050-0-0332	APD050-A-0332	APD050-6-0332
	PULSATION DAMPER 0.5L 1"BS	1" BSP (F)	APD050-0-0003	APD050-A-0003	APD050-6-0003
	PULSATION DAMPER 0.5L 1/2B	1/2" BSP (F)	APD050-0-0001	APD050-A-0001	APD050-6-0001
	PULSATION DAMPER 0.5L 3/4BS	3/4" BSP (F)	APD050-0-0002	APD050-A-0002	APD050-6-0002
	PULSATION DAMPER 0.5L 1/2N	1/2" NPT (F)	APD050-0-0005	APD050-A-0005	APD050-6-0005
	PULSATION DAMPER 0.5L 1"NPT FE	1" NPT (F)	APD050-0-0024	APD050-A-0024	APD050-6-0024
	PULSATION DAMPER 0.5L 1/4" NPT	1/4" NPT (F)	APD050-0-0026	APD050-A-0026	APD050-6-0026
	PULSATION DAMPER 0.5L 1"BS	1" BSP (F)	APD050-0-0003EX	APD050-A-0003EX	APD050-6-0003EX
	PULSATION DAMPER 0.5L 3/4" NPT	3/4" NPT (F)	APD050-0-0007EX	APD050-A-0007EX	APD050-6-0007EX
	0.5L APD SPARES - VITON - ATEX		APD50-0EX	APD050-AEX	APD050-6EX
	BLADDER KIT 0.5L		APD050-0	APD050-A	APD050-6

Volume (L)	Type	Connection	Nitrile Version	EPDM Version	Viton Version
			Part Number	Part Number	Part Number
1	PULSATION DAMPER 1.1L 3/4"	3/4" NPT (F)	APD100-0-0332	APD100-A-0001	APD100-6-0332
	PULSATION DAMPER 1.0L 1/2B	1/2" BSP (F)	APD100-0-0001	APD100-A-0003	APD100-6-0001
	PULSATION DAMPER 1.0L 1"BSP	1 1/2" BSP (F)	APD100-0-0004	APD100-A-0004	APD100-6-0004
	PULSATION DAMPER 1.0L 1/2N	1/2" NPT (F)	APD100-0-0005	APD100-A-0005	APD100-6-0005
	PULSATION DAMPER 1.0L 3/4N	3/4" NPT (F)	APD100-0-0007	APD100-A-0007	APD100-6-0007
	PULSATION DAMPER 1.0L 1"	1" NPT (F)	APD100-0-0024	APD100-A-0024	APD100-6-0024
	PULSATION DAMPER 1.0L 1/2"	1/2" 300 LB RF	APD100-0-0012	APD100-A-0012	APD100-6-0012
	BLADDER KIT 1.0L		APD100-0	APD100-A	APD100-6
2	PULSATION DAMPER 2.0L 1"BS	1" BSP (F)	APD200-0-0003	APD200-A-0003	APD200-6-0003
	PULSATION DAMPER 2.0L 2"BS	2" BSP (F)	APD200-0-0006	APD200-A-0006	APD200-6-0006
	PULSATION DAMPER 2.0L 3/4N	3/4" NPT (F)	APD200-0-0007	APD200-A-0007	APD200-6-0007
	PULSATION DAMPER 2.0L VITON 1"	1" NPT (F)	APD200-0-0024	APD200-A-0024	APD200-6-0024
	PULSATION DAMPER 2L 3/4"NP	3/4" NPT (F)	APD200-0-0332	APD200-A-0332	APD200-6-0332
	PULSATION DAMPER 2L 1"NPT	1" NPT (F)	APD200-0-0334	APD200-A-0334	APD200-6-0334
	PULSATION DAMPER 2L 2" 150	2" 150LB RF	APD200-0-0336	APD200-A-0336	APD200-6-0336
	PULSATION DOMPER,2L 1 1/4" BSP	1 1/4" BSP (F)	APD200-0-0343	APD200-A-0343	APD200-6-0343
	PULSATION DAMPER 2L, 1 1/2"	1 1/2" 1500LB RF	APD200-0-0113	APD200-A-0113	APD200-6-0113
	BLADDER KIT 2.0L		APD200-0	APD200-A	APD200-6
3	PULSATION DAMPER 3.0L 2"BS	2" BSP (F)	APD300-0-0006	APD300-A-0006	APD300-6-0006
	PULSATION DAMPER 3.0L 1"	1" NPT (F)	APD300-0-0024	APD300-A-0024	APD300-6-0024
	PULSATION DAMPER 3L 11/2"	1 1/2" 1500LB RF	APD300-0-0335	APD300-A-0335	APD300-6-0335
	PULSATION DAMPER 3L 1"NPT	1" NPT (F)	APD300-0-0334	APD300-A-0334	APD300-6-0334
	PULSATION DAMPER 3L 1 1/	1 1/4" BSP (F)	APD300-0-0020	APD300-A-0020	APD300-6-0020
	BLADDER KIT 3.0L		APD300-0	APD300-A	APD300-6
5	PULSATION DAMPER 5.0L 2"BS	2" BSP (F)	APD500-0-0006	APD500-A-0032	APD500-6-0032
	PULSATION DAMPER 5.0L 2"300	1"1/2 BSP (F)	APD500-0-0004	APD500-A-0004	APD500-6-0004
	PULSATION DAMPER 5L 1"NPT	1" NPT (F)	APD500-0-0334	APD500-A-0334	APD500-6-0334
	PULSATION DAMPER 5L, 6" IN LINE	6" 150LB RF IN-LINE	APD500-0-0202	APD500-A-0202	APD500-6-0202
	BLADDER KIT 5.0L		APD500-0	APD500-A	APD500-6

Pulsation damper BPD Series

Standard version (Stainless **Steel** shell). According to PED 2014/68/EU
Product , Part numbers, Accessories
High Pressure with the steel gas valve

Volume (L)	Type	Connection	Nitrile Version	EPDM Version	Viton Version
			Part Number	Part Number	Part Number
0.1	PULSATION DAMPER 0.1L	1/2" BSP (F)	BPD001-0-0001		
	PULSATION DAMPER 0.1L	1/2" NPT (F)	BPD001-0-0005EX		
	PULSATION DAMPER 0.1L	1/4" BSP (F)	BPD001-0-0107		
	PULSATION DAMPER 0.1L	1/2" NPT			BPD001-6-0005
	0.1L BPD SPARES-				BPD001-6EX
	BLADDER KIT 0.1L		BPD001-0	BPD001-A	BPD001-6
0.25	PULSATION DAMPER 0.25L	1/2" BSP (F)	BPD025-0-0001		
	PULSATION DAMPER 0.25L	1/2" NPT (F)			BPD025-6-0005
	BLADDER KIT 0.25L		BPD025-0	BPD025-A	BPD025-6
	PULSATION DAMPER 0.25L 1/2"	1/2" 2500LB RTJ			BPD025-6-0327
0.5	PULSATION DAMPER 0.5L 1/2"	1/2" BSP (F)	BPD050-0-0001		
	PULSATION DAMPER 0.5L 3/4"	3/4" BSP (F)	BPD050-0-0002		
	PULSATION DAMPER 0.5L 3/8"	1/2" NPT (F)	BPD050-0-0005	BPD050-A-0005	BPD050-6-0005
	PULSATION DAMPER 0.5L 3/4"	3/4" NPT (F)	BPD050-0-0007		
	PULSATION DAMPER 0.5L	1/2" NPT (F)	BPD050-0-0005EX		
	PULSATION DAMPER 0.5L	3/4" NPT (F)	BPD050-0-0007EX		
	PULSATION DAMPER 0.5L 3/4	1/4" NPT (F)	BPD050-0-0026EX		
	PULSATION DAMPER 0.5L	1/2" NPT (F)	BPD050-0-0331		
	PULSATION DAMPER 0.5L 1/2		BPD050-0-0332		
	BLADDER KIT 0.5L		BPD050-0	BPD050-A	BPD050-6
1	PULSATION DAMPER 1,0L 3/4"	1" BSP (F)	BPD100-0-0003		
	PULSATION DAMPER 1,0L	1/2" NPT (F)	BPD100-0-0005		BPD100-6-0005
	PULSATION DAMPER 1,0L	3/4" NPT (F)	BPD100-0-0007		
	PULSATION DAMPER 1.0L	1" NPT (F)			BPD100-6-0024
	PULSATION DAMPER 1,0L	1/2" NPT (F)	BPD100-0-0331		
	BLADDER KIT 1,0L		BPD100-0		BPD100-6
2	PULSATION DAMPER 2,0L	1 1/4" BSP (F)	BPD200-#-0234		
	PULSATION DAMPER 2,0L	1/2" BSP (F)	BPD200-0-0001		
	PULSATION DAMPER 2,0L	1" BSP (F)	BPD200-0-0003	BPD200-A-0003	
	PULSATION DAMPER 2.0L	1/2" NPT (F)	BPD200-0-0005		
	PULSATION DAMPER 2,0L 3/4"	3/4" NPT (F)	BPD200-0-0007		
	PULSATION DAMPER 2.0 L	3/4" NPT (F)			BPD200-6-0007EX
	PULSATION DAMPER 2.0L	1" NPT (F)			BPD200-6-0024
	PULSATION DAMPER 2,0L	3/4" NPT (F)	BPD200-0-0332		
	PULSATION DAMPER 2,0L	1/2" NPT (F)	BPD200-0-0335		
	PULSATION DAMPER 2,0L	1 1/2" 2500LB RTJ	BPD200-0-0337		
	PULSATION DAMPER 2,0L	1 1/2"	BPD200-0-0349		
	BLADDER KIT 2,0L		BPD200-0	BPD200-A	BPD200-6

Tel: +45 63 12 83 00 | Email: ps@hymatik.com | www.hymatik.com | Hvidkaervej 27a, DK-5250 Odense SV, Denmark

Volume (L)	Type	Connection	Nitrile Version	EPDM Version	Viton Version
			Part Number	Part Number	Part Number
3	PULSATION DAMPER 3.0L	1" BSP (F)	BPD300-0-0003	BPD300-A-0003	
	PULSATION DAMPER 3.0L	1/2" NPT (F)	BPD300-0-0005		
	PULSATION DAMPER 3,0L 3/4"NP	3/4" NPT (F)	BPD300-0-0007		
	PULSATION DAMPER 3.0L 2" 2500 RF	2" 2500LB RF			BPD300-6-0096
	PULSATION DAMPER 3,0L 1"NPT	3/4" NPT (F)	BPD300-0-0332		
	PULSATION DAMPER 3,0L 1"BSP			BPD300-A-0347	
	BLADDER KIT 3,0L		BPD300-0		BPD300-6
5	BLADDER KIT 5,0L		BPD500-0		

Tel: +45 63 12 83 00 | Email: ps@hymatik.com | www.hymatik.com | Hvidkaervej 27a, DK-5250 Odense SV, Denmark

Notes

Tel: +45 63 12 83 00 | Email: ps@hymatik.com | www.hymatik.com | Hvidkaervej 27a, DK-5250 Odense SV, Denmark





aerospace
climate control
electromechanical
filtration
fluid & gas handling
hydraulics
pneumatics
process control
sealing & shielding





SH Series Attenuators

Reducing noise in hydraulic systems - 350 bar



Parker OLAER

ENGINEERING YOUR SUCCESS.

Attenuators SH Series 350 bar

Standard version (Carbon Steel shell) . According to PED 2014/68/EU Article 4.3, Fluid Group 2

Type	Part number	Clamps	Volume Litres	Max. Working pressure (PS) bar	Max Flow Rate l/min	Admissible Attenuator Temperature min/max (°C)	Weight kg	Dimensions in mm				
		Model (quantity) Part number						A max Height	ØD	øF for Bonded Seal	øG Gas Cyl.	H mini
SH 170-25*	60045400100	E95 20250803648	1.5	350	25	-40/+175	5.8	462	90	35.3	3/4"	18
SH 170-50*	60045500100	E95 20250803648	2.2	350	50	-40/+175	7.3	590	90	35.3	3/4"	18
SH 170-75*	60045100100	E114 20251003648	3.4	350	75	-40/+175	12.0	597	114	54.0	1 1/4"	22
SH 170-100*	60044900100	E114 20251003648	3.4	350	100	-40/+175	12.0	597	114	54.0	1 1/4"	22
SH 170-125*	60045000100	E114 20251003648	4.6	350	125	-40/+175	15.0	749	114	54.0	1 1/4"	22
SH 170-175*	60044600100	E114 20251003648	4.6	350	170	-40/+175	15.0	749	114	54.0	1 1/4"	22
SH 170-275*	60045200100	E114 20251003648	4.6	350	275	-40/+175	15.0	749	114	54.0	1 1/4"	22
SH 220-25*	60045300100	E95 20250803648	1.2	350	25	-40/+175	5.2	386	90	35.3	3/4"	18
SH 220-50*	60043800100	E95 20250803648	1.5	350	50	-40/+175	5.8	462	90	35.3	3/4"	18
SH 220-75*	60045600100	E95 20250803648	1.5	350	75	-40/+175	5.8	462	90	35.3	3/4"	18
SH 220-100*	60045700100	E95 20250803648	2.2	350	100	-40/+175	7.4	590	90	35.3	3/4"	18
SH 220-125*	60045800100	E95 20250803648	2.2	350	125	-40/+175	7.4	590	90	35.3	3/4"	18
SH 220-175*	60044700100	E114 20251003648	3.4	350	175	-40/+175	12.0	597	114	54.0	1 1/4"	22
SH 220-275*	60044500100	E114 20251003648	3.4	350	275	-40/+175	12.0	597	114	54.0	1 1/4"	22

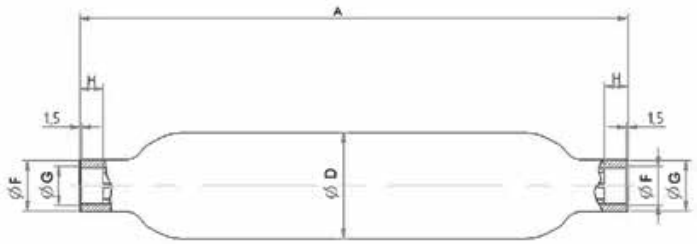

Tel: +45 63 12 83 00 | Email: ps@hymatik.com | www.hymatik.com | Hvidkaervej 27a, DK-5250 Odense SV, Denmark

General information Attenuators

The performance obtained with the attenuators substantially reduces the fluctuations of high-frequency hydraulic pressure (see diagrams 1 and 2).

Curves 3 and 4 show firstly a typical attenuation curve (in dB) specific to each model of muffler, indicating the attenuation levels of the pressure pulses as a function of the frequencies to be filtered, and secondly an example of the amplitude spectra of a pump with and without a muffler, which reduces the pulses from 217 dB to 190 dB.

Without Hydraulic Attenuators

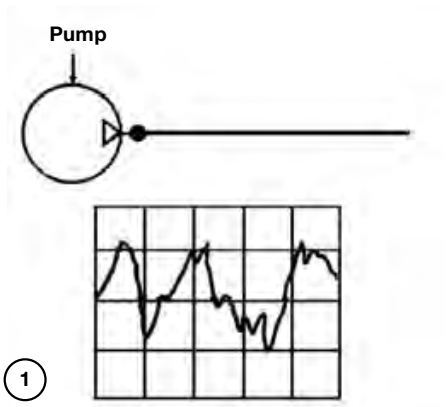

With Hydraulic Attenuators

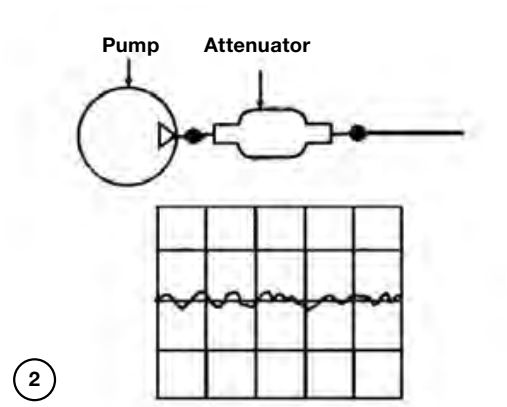

SH Series: How to order an Attenuator

Series	Range	Flow Rate l/mn
SH	170	25

SH Attenuators

SH 170 : frequencies = 170 Hz
SH 220 : frequencies = 220 Hz

From 25 up to 275 l/mn

Regulations for pulsations dampers & attenutors

- ● Available
- ○ Available on request

This table is giving an indication of approval availability for the range of products.
Availability is to be confirmed for each approval, in particular the pressure rating and the allowable working temperatures.

Destination			EUROPE				USA		MARINE - OFFSHORE							
Regulation codification			/90 /00	/90 /00	/90 EX		/15 /48		/43 /24		/13 /11		/23 /41		/ 24	
Type *	Volume range (L)	Material : CS : Carbone stell SS : Stainless stell	PED FLUID GROUP 2	PED FLUID GROUP 1	ATEX	Maximum Working Pressure (Bar)	ASME VIII div. 1	Maximum Working Pressure (Psi)	DNV MOBILE SHIPS	Maximum Working Pressure (Bar)	BUREAU VERITAS MARINE	Maximum Working Pressure (Bar)	ABS AMERICAN BUREAU OF SHIPPING	Maximum Working Pressure (Bar)	GL GERMANISCHER LLOYD'S	Maximum Working Pressure (Bar)
APD	0,1L	SS	●	●		350										
APD	0,25L	SS	●	●		300										
APD	0,5L	SS	●	●		250										
APD	1 to 2L	SS	●	●		180										
APD	3L	SS	●	●		250										
APD	5L	SS	●	●		120										
BPD	0,1L	SS	●	●		690										
BPD	0,25L	SS	●	●		690										
BPD	0,5L	SS	●	●		690										
BPD	1 to 2L	SS	●	●		450										
BPD	3L	SS	●	●		430										
BPD	5L	SS	●	●		300										
CPD	0,1L	SS	●	●		300										
CPD	0,25L	SS	●	●		250										
CPD	0,5L	SS	●	●		170										
CPD	1 to 2L	SS	●	●		140										
CPD	3L	SS	●	●		120										
CPD	5L	SS	●	●		95										
CPDU	0,1L	SS	●	●		300	●	300								
CPDU	0,25L	SS	●	●		250	●	250								
CPDU	0,5L	SS	●	●		170	●	170								
CPDU	1 to 2L	SS	●	●		140	●	140								
CPDU	3L	SS	●	●		120	●	120								
CPDU	5L	SS	●	●		95	●	95								

Regulations for pulsations dampers & attenutors

- ● Available
- ○ Available on request

This table is giving an indication of approval availability for the range of products.
Availability is to be confirmed for each approval, in particular the pressure rating and the allowable working temperatures.

Destination			EUROPE				USA		MARINE - OFFSHORE							
Regulation codification			/90 /00	/90 /00	/90 EX		/15 /48		/43 /24		/13 /11		/23 /41		/ 24	
Type *	Volume range (L)	Material : CS : Carbone stell SS : Stainless stell	PED FLUID GROUP 2	PED FLUID GROUP 1	ATEX	Maximum Working Pressure (Bar)	ASME VIII div. 1	Maximum Working Pressure (Psi)	DNV MOBILE SHIPS	Maximum Working Pressure (Bar)	BUREAU VERITAS MARINE	Maximum Working Pressure (Bar)	ABS AMERICAN BUREAU OF SHIPPING	Maximum Working Pressure (Bar)	GL GERMANISCHER LLOYD'S	Maximum Working Pressure (Bar)
DPD	0,1L	SS	●	●		460										
DPD	0,25L	SS	●	●		420										
DPD	0,5L	SS	●	●		400										
DPD	1 to 2L	SS	●	●		350										
DPD	3L	SS	●	●		300										
DPD	5L	SS	●	●		207										
DPDU	0,1L	SS	●	●		460	●	300								
DPDU	0,25L	SS	●	●		420	●	250								
DPDU	0,5L	SS	●	●		400	●	170								
DPDU	1 to 2L	SS	●	●		350	●	140								
DPDU	3L	SS	●	●		300	●	120								
DPDU	5L	SS	●	●		207	●	95								
SBV3	0,5L	CS	●	●		40										
SBV3	1 to 2,5L	CS	●	●		40					●	40	●	40		
SH	170 to 220	CS	●	●		350										

Notes

Tel: +45 63 12 83 00 | Email: ps@hymatik.com | www.hymatik.com | Hvidkaervej 27a, DK-5250 Odense SV, Denmark





aerospace
climate control
electromechanical
filtration
fluid & gas handling
hydraulics
pneumatics
process control
sealing & shielding





DA Series
Diaphragm Accumulators

Previously known as ELM Series



Parker OLAER

ENGINEERING YOUR SUCCESS.

Description

Diaphragm accumulators are inexpensive, compact and lightweight and are ideally suited where weight and space is an important consideration. Ideally suited to Mobile -Agricultural and Construction markets (140 to 350 bar/ 0.075 to 3.5L).

The DA diaphragm accumulator offers a reliable and efficient solution for storing energy under pressure and as an hydraulic spring. Utilizing comprehensive tools and resources including an applications database, CAD/CAM we offer an optimized design and performance membrane accumulator. (all hydraulic accumulators are compliant to 2014/68/EU regulation)

DA diaphragm accumulators (also referred to as membrane accumulators) are gas-loaded accumulators in which separation between the liquid and gas sides is achieved by a flexible diaphragm. They have a compact and lightweight design are available in 2 elastomer mixes; Nitrile and Hydrin (for low temperature working conditions) with a maximum pressure of 350bar (up to 2,8 liters) and volume of 3.5 Litres (up to 250 Bar).

DA accumulator range comes with a bonded seal (BS) fluid port with female or male and female fluid connection and M28x1,5 gas connection.

Accumulator accessories such as Safety Blocks, Clamps, Lock nut, Charging Sets (VGU), can aid the safe installation and operation of the accumulators in any hydraulic system.

Parker Olaer have developed very sophisticated simulation software to optimize sizing recommendations for hydraulic accumulators. You can download the accumulator sizing software from www.Parker.com/acde.

Markets

- **Mobile**
- **Industrial**
- **Defense**
- **Energy**
- **Renewable**
- **Marine**
- **Mining**
- **Oil and Gas**
- **Rail**

Features/Benefits

- **The adaption of a hydraulic shock absorber made up of a diaphragm accumulator improves driver comfort and offers immediate response times when driving over obstacles or rough terrain.**
- **The DA diaphragm accumulator offers a cost effective solution for hydraulic systems.**
- **The DA diaphragm accumulators are PED compliant and can be used in over 35 countries.**
- **The DA diaphragm accumulators offer high compression ratio (up to 8 – according to type)**
- **Low maintenance product**
- **We offer a wealth of product knowledge and experience thus enabling us to provide first class technical support and customer service.**

E-configurable product
visit Parker.com/acde

Applications

- **Agricultural equipment**
- **Construction equipment**
- **Forestry**
- **Handling/Cranes**
- **Truck**
- **Wind Energy**
- **Hydraulic Power Units**
- **Lubrication Systems**
- **Power Generation**
- **Energy Transmission & Distribution**
- **Defence**
- **Air & Gas Compressors**
- **Entertainment Automation**
- **Moulding**
- **Plastic Presses**
- **Die Casting**
- **Vehicle Assembly Facilities**
- **Machine Tools**

DA Series Technical Characteristics

The technical characteristics are as follows:

Minimum/maximum temperature allowable (° Celsius) :
- 20/+80 for standard nitrile elastomers for models between 0.5 < V< 1.4 Litre
- 10/+80 for standard nitrile elastomers for models ≥ 2 Litres and < 0.32 Litre
- 35/+80 for hydrin elastomers

Materials : carbon steel, nitrile or hydrin diaphragm, for other constructions: please consult Parker.

This non-repairable accumulator comprises a shell electron beam welded in carbon steel or stainless steel, nitrile or hydrin diaphragm, for other constructions please consult Parker Olaer.



Comparative cycle for a tractor and its accessories in working conditions !

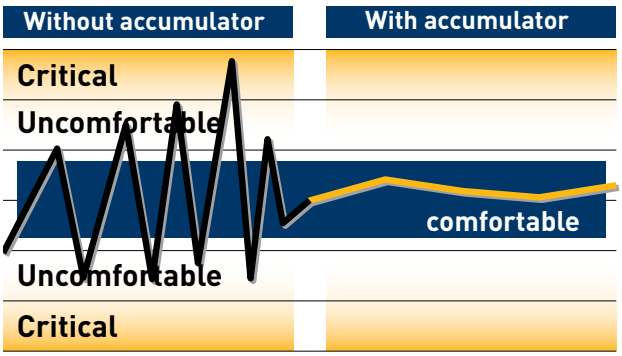



DA Series: How to order a diaphragm accumulator

DA - 140 - 140 90 A F 11 25 P000

Product Type

DA	Diaphragm Accumulators

Volume

007	0,075L
016	0.16L
032	0.32L
050	0.5L
075	0.75L
100	1L
140	1.4L
200	2L
280	2.8L
350	3.5L

Working Pressure

100	100 bar
140	140 bar
210	210 bar
250	250 bar
350	350 bar

Approval

00	PED 2014/68/EU Art. 4.3
90	EC (according to PED 2014/68/EU)

Fluid connection

A	G ½”
B	G ¾”
C	G ½” + External thread M33x1,5
D	G ¾” + External thread M45x1,5

Gas connection

F	M28x1,5

Construction

11	Carbon steel shell

Membrane rubber compound

25	NBR
02	ECO

Precharge

000	No-precharge
XXX	005 to 130bar (Step 5 by 5)

Tel: +45 63 12 83 00 | Email: ps@hymatik.com | www.hymatik.com | Hvidkaervej 27a, DK-5250 Odense SV, Denmark

DA Series 140 - 350 BAR, 0.075 to 0.75 Litres

NBR rubber mix (previous known as ELM range)

Standard Version (Carbon steel /mix NBR) compatible with mineral oils (2)
According to PED 2014/68/EU

E-configurable product
visit Parker.com/acde

Product, Part numbers, Accessories

Type Part number	**Clamps** **Model**	**Lock nut** Model	**Cross Reference OLAER**	**Cross Reference ADE**
DA-0.075L-250BAR-10849201125 DA-007-25000AF1125PXXX*	-	-	ELM 0.075-250/00/AF* 10849201125	ADE007-25R1A2
DA-0.16L-250BAR-10849301125 DA-016-25000AF1125PXXX*	-	-	ELM 0.16-250/00/AF* 10849301125	ADE016-25R1A2
DA-0.32L-210BAR-10986601125 DA-032-21000AF1125PXXX*	E95 (1) 20250803648	-	ELM 0.32-210/00/AF* 10986601125	ADE032-21R1A2
DA-0.50L-210BAR-10849501125 DA-050-21000AF1125PXXX*	E106 (1) 20250903648	-	ELM 0.5-210/00/AF* 10849501125	ADE050-21R1A2
DA-0.50L-210BAR-10849601125 DA-050-21000CF1125PXXX*	E106 (1) 20250903648	M33x1.5 10945700100	ELM 0.5-210/00/CF* 10849601125	
DA-0.75L-210BAR-10849701125 DA-075-21000AF1125PXXX*	E114 (1) 20251003648	-	ELM 0.75-210/00/AF* 10849701125	ADE075-21R1A2
DA-0.75L-210BAR-10849801125 DA-075-21000CF1125PXXX*	E114 (1) 20251003648	M33x1.5 10945700100	ELM 0.75-210/00/CF* 10849801125	
DA-0.75L-350BAR-10931801125 DA-075-35000AF1125PXXX*	E136 (1) 20251103648	-	ELM 0.75-350/00/AF* 10931801125	
DA-0.75L-350BAR-10931901125 DA-075-35000CF1125PXXX*	E136 (1) 20251103648	M33x1.5 10945700100	ELM 0.75-350/00/CF* 10931901125	

(2) For other fluids consult Parker

* According to Article 4.3 PED 2014/68/EU

Form A/ Form B

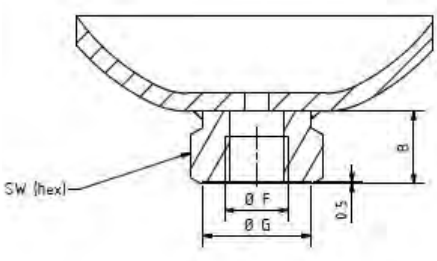

Form C/ Form D

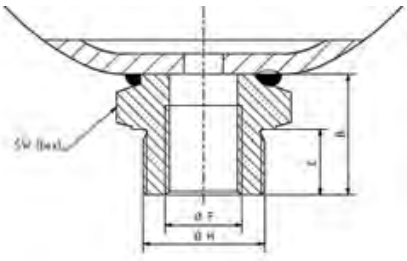

Gas Valve

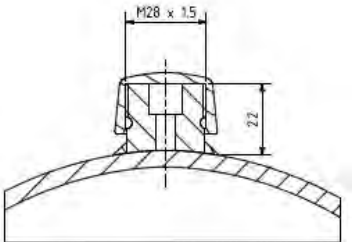

Type	Effective Gas vol. Litres	Max. Working pressure (PS) bar	Temp. Min/ Max (°C)	Max. Pre-charge bar	Max compression in bar ratio P2/P0	Max Pressure amplitude P2-P1	Weight kg	Dimensions in mm						Oilport	
								A max Height	B	C	SW	D	G	F	H
DA-0.075L-250BAR-10849201125	0.075	250	-10/+80	130	8	210	0.7	112	20		32	64	29	G½	-
DA-0.16L-250BAR-10849301125	0.16	250	-10/+80	130	6	210	1	120	20		32	75	29	G½	-
DA-0.32L-210BAR-10986601125	0.32	210	-10/+80	130	8	140	1.4	135	20		32	92	29	G½	-
DA-0.50L-210BAR-10849501125	0.5	210	-20/+80	130	8	175	2	153	22		41	107	34	G½	-
DA-0.50L-210BAR-10849601125	0.5	210	-20/+80	130	8	175	2	164	33	18	41	107	-	G½	M33x1.5
DA-0.75L-210BAR-10849701125	0.75	210	-20/+80	130	8	175	2.6	167	22		41	122	34	G½	-
DA-0.75L-210BAR-10849801125	0.75	210	-20/+80	130	8	175	2.6	178	33	18	41	122	-	G½	M33x1.5
DA-0.75L-350BAR-10931801125	0.75	350	-20/+80	130	8	150	4	174	22		41	128	34	G½	-
DA-0.75L-350BAR-10931901125	0.75	350	-20/+80	130	8	150	4	185	33	18	41	128	-	G½	M33x1.5

Lock-nut

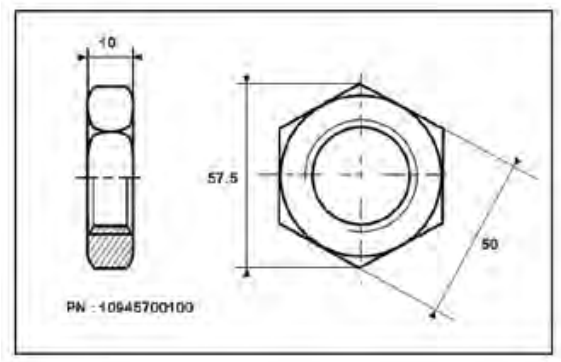

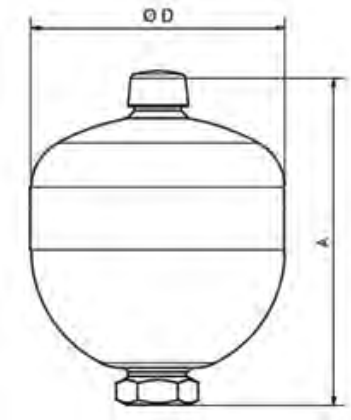

DA Series 140 - 350 BAR, 1 to 1.4 Litres

NBR rubber mix (previous known as ELM range)

Standard Version (Carbon steel /mix NBR) compatible with mineral oils (2)
According to PED 2014/68/EU

E-configurable product
visit Parker.com/acde

Type Part number	Clamps Model (quantity) Part number	Lock nut Model (quantity) Part number	Cross Reference OLAER	Cross Reference ADE
DA-1.00L-210BAR-10984701125 DA-100-21000AF1125PXXX*	E136 (1) 20251103648	-	ELM 1-210/00/AF* 10984701125	ADE100-21R1A2
DA-1.00L-210BAR-10984801125 DA-100-21000CF1125PXXX*	E136 (1) 20251103648	M33x1.5 10945700100	ELM 1-210/00/CF* 10984801125	
DA-1.00L-350BAR-11110901125 DA-100-35000AF1125PXXX*	E136 (1) 20251103648	-	ELM 1-350/00/AF* 11110901125	
DA-1.00L-350BAR-11111001125 DA-100-35000CF1125PXXX*	E136 (1) 20251103648	M33x1.5 10945700100	ELM 1-350/00/CF* 1111101125	
DA-1.40L-140BAR-10850201125 DA-140-14090AF1125PXXX	E155 (1) 20251203648	-	ELM 1.4-140/90/AF 10850201125	ADE140-14R1C2
DA-1.40L-140BAR-10850301125 DA-140-14090CF1125PXXX	E155 (1) 20251203648	M33x1.5 10945700100	ELM 1.4-140/90/CF 10850301125	
DA-1.40L-210BAR-10996501125 DA-140-21090AF1125PXXX	E155 (1) 20251203648	-	ELM 1.4-210/90/AF 10996501125	
DA-1.40L-210BAR-10996601125 DA-140-21090CF1125PXXX	E155 (1) 20251203648	M33x1.5 10945700100	ELM 1.4-210/90/CF 10996601125	
DA-1.40L-250BAR-11013201125 DA-140-25090AF1125PXXX	E155 (1) 20251203648	-	ELM 1.4-250/90/AF 11013201125	ADE140-25R1C2
DA-1.40L-250BAR-11013301125 DA-140-25090CF1125PXXX	E155 (1) 20251203648	M33x1.5 10945700100	ELM 1.4-250/90/CF 11013301125	
DA-1.40L-350BAR-10932101125 DA-140-35090AF1125PXXX	E160 (1) 20259003648	-	ELM 1.4-350/90/AF 10932101125	
DA-1.40L-350BAR-10932201125 DA-140-35090CF1125PXXX	E160 (1) 20259003648	M33x1.5 10945700100	ELM 1.4-350/90/CF 10932201125	

(2) For other fluids consult Parker
* According to Article 4.3 PED 2014/68/EU

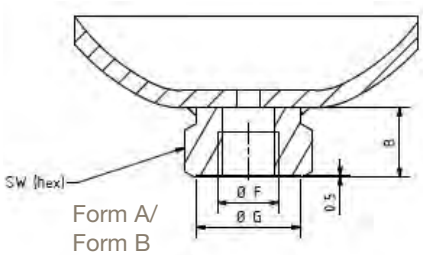

Form A/
Form B

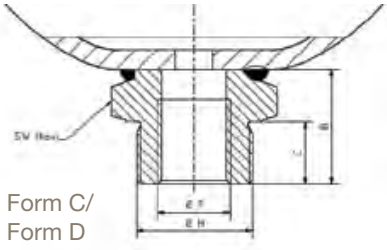

Form C/
Form D

Gas Valve

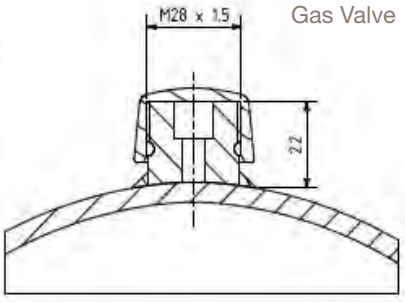

Parker Hannifin
Accumulator and Cooler Division Europe

Tel: +45 63 12 83 00 | Email: ps@hymatik.com | www.hymatik.com | Hvidkaervej 27a, DK-5250 Odense SV, Denmark

Type	Effective Gas vol. Litres	Max. Working pressure (PS) bar	Temp. Min/ Max (°C)	Max. Pre-charge bar	Max com-pression in bar ratio P2/ P0	Max Pressure amplitude P2-P1	Weight kg	Dimensions in mm						Oilport	
								A max Height	B	C	SW	D	G	F	H
DA-1.00L-210BAR-10984701125	1	210	-20/+80	130	8	170	3.5	182	22		41	136	34	G½	-
DA-1.00L-210BAR-10984801125	1	210	-20/+80	130	8	170	3.5	192	33	18	41	136	-	G½	M33x1.5
DA-1.00L-350BAR-11110901125	1	350	-10/+80	130	8	150	5	200	22		41	129	34	G½	-
DA-1.00L-350BAR-11111001125	1	350	-10/+80	130	8	150	5	211	33	18	41	129		G½	M33x2
DA-1.40L-140BAR-10850201125	1.4	140	-20/+80	130	8	120	4.2	192	22		41	147	34	G½	-
DA-1.40L-140BAR-10850301125	1.4	140	-20/+80	130	8	120	4.2	203	33	18	41	147	-	G½	M33x1.5
DA-1.40L-210BAR-10996501125	1.4	210	-20/+80	130	8	120	4.2	192	22		41	148	34	G½	-
DA-1.40L-210BAR-10996601125	1.4	210	-20/+80	130	8	120	4.2	203	33	18	41	148	-	G½	M33x1.5
DA-1.40L-250BAR-11013201125	1.4	250	-20/+80	130	8	140	5.4	196	22		41	152	34	G½	
DA-1.40L-250BAR-11013301125	1.4	250	-20/+80	130	8	140	6	207	33	18	41	152	-	G½	M33x1.5
DA-1.40L-350BAR-10932101125	1.4	350	-20/+80	130	8	150	7	199	22		41	156	34	G½	
DA-1.40L-350BAR-10932201125	1.4	350	-20/+80	130	8	150	7	221	44	18	44	156	-	G½	M33x1.5

Lock-nut

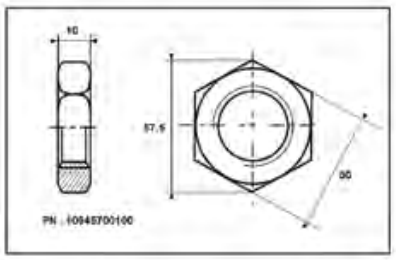

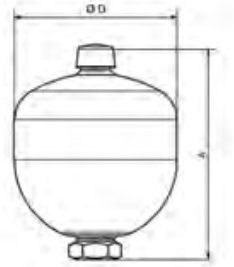

Tel: +45 63 12 83 00 | Email: ps@hymatik.com | www.hymatik.com | Hvidkaervej 27a, DK-5250 Odense SV, Denmark

DA Series 140 - 350 BAR, 2 to 3.5 Litres

NBR rubber mix (previous known as ELM range)

Standard Version (Carbon steel /mix NBR) compatible with mineral oils (2)
According to PED 2014/68/EU
Product, Part numbers, Accessories

E-configurable product
visit Parker.com/acde

Type Part number	Clamps Model (quantity) Part number	Lock nut Model (quantity) Part number	Cross Reference OLAER	Cross Reference ADE
DA-2.00L-100BAR-10850401125 DA-200-10090AF1125PXXX	E155 (1) 20251203648	-	ELM 2-100/90/AF 10850401125	
DA-2.00L-250BAR-11013401125 DA-200-25090BF1125PXXX	E155 (1) 20251203648	-	ELM 2-250/90/AF 11013401125	
DA-2.00L-350BAR-11006001125 DA-200-35090BF1125PXXX	E160 (1) 20259003648	-	ELM 2-350/90/AF 11006001125	
DA-2.00L-350BAR-11006101125 DA-200-35090DF1125PXXX	E160 (1) 20259003648	M45X1.5	ELM 2-350/90/CF 11006101125	
DA-2.80L-250BAR-10887901125 DA-280-25090BF1125PXXX	E168 (1) 20251303648	-	ELM 2.8-250/90/AF 10887901125	ADE280-25R1C2
DA-2.80L-350BAR-10975801125 DA-280-35090BF1125PXXX	E180 (1) 20243203625	-	ELM 2.8-350/90/AF 10975801125	
DA-2.80L-350BAR-10975901125 DA-280-35090DF1125PXXX	E180 (1) 20243203625	M45X1.5	ELM 2.8-350/90/CF 10975901125	
DA-3.50L-250BAR-10850501125 DA-350-25090BF1125PXXX	E168 (1) 20251303648	-	ELM 3.5-250/90/AF 10850501125	ADE350-25R1C2
MBSP 3,5-350 350-1315-032-711	E180 (1) 20243203625	-	ELM 3.5-350/90/AF 10984901125	
MBSP 3,5-350 350-1315-022-711	E180 (1) 20243203625	M45X1.5	ELM 3.5-350/90/CF 10985001125	

(2) For other fluids consult Parker

Form A/ Form B

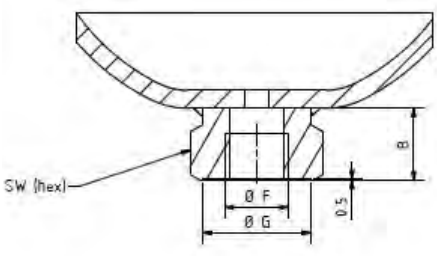

Form C/ Form D

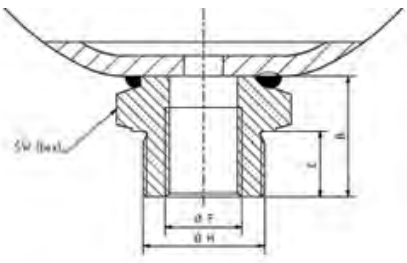

Gas Valve

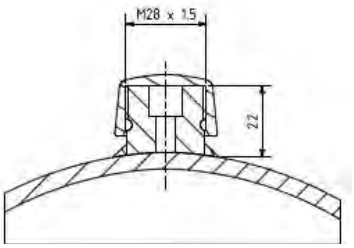

Type Part number	Effective Gas vol. Litres	Max. Working pressure (PS) bar	Temp. Min/ Max (°C)	Max. Pre-charge bar	Max compres-sion in bar ratio P2/P0	Max Pressure amplitude P2-P1	Weight kg	Dimensions in mm						Oilport	
								A max Height	B	C	SW	D	G	F	H
DA-2.00L-100BAR-10850401125	2	100	-10/+80	100	8	80	3.5	241	22		41	145	34	G½	
DA-2.00L-250BAR-11013401125	2	250	-10/+80	130	8	150	9.5	252	22		41	156	33	G3/4	
DA-2.00L-350BAR-11006001125	2	350	-10/+80	130	8	150	9.5	252	22		41	156	33	G3/4	
DA-2.00L-350BAR-11006101125	2	350	-10/+80	130	8	150	9.5	270	40	20	50	156	-	G3/4	M45x1.5
DA-2.80L-250BAR-10887901125	2.8	250	-10/+80	130	6	140	8.5	269	20		41	168	33	G3/4	
DA-2.80L-350BAR-10975801125	2.8	350	-10/+80	130	6	200	14.3	265	23		55	180	34	G3/4	
DA-2.80L-350BAR-10975901125	2.8	350	-10/+80	130	6	200	14.5	286	21	20	55	180	-	G3/4	M45x1.5
DA-3.50L-250BAR-10850501125	3.5	250	-10/+80	130	4	100	10.2	314	20		41	168	33	G3/4	
MBSP 3,5-350	3.5	350	-10/+80	130	4	200	16	305	23		55	180	34	G3/4	
MBSP 3,5-350	3.5	350	-10/+80	130	4	200	16.5	326	26	20	55	180	-	G3/4	M45x1.5

Lock-nut

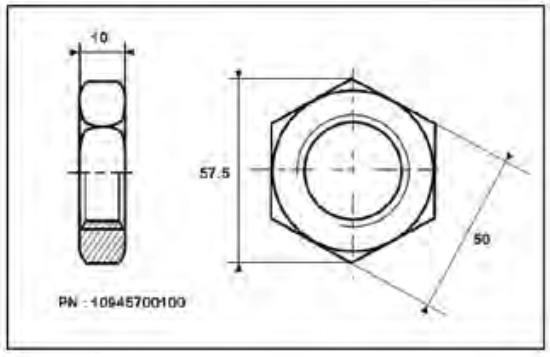

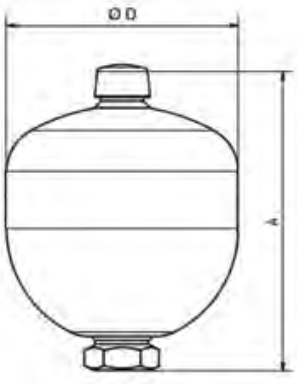

Above

Parker Hannifin
Accumulator and Cooler Division Europe

Tel: +45 63 12 83 00 | Email: ps@hymatik.com | www.hymatik.com | Hvidkaervej 27a, DK-5250 Odense SV, Denmark

DA Series 140 - 350 BAR, 0.075 to 0.75 Litres

ECO rubber mix (previous known as ELM range)

Standard Version (Carbon steel /mix **ECO**) compatible with mineral oils (2)
According to PED 2014/68/EU.

E-configurable product
visit Parker.com/acde

Product, Part numbers, Accessories

Type Part number	**Clamps** **Model (quantity)** **Part number**	**Lock nut** **Model (quantity)** Part number	**Cross Reference OLAER**	**Cross Reference ADE**
DA-0.075L-250BAR-10849201102 DA-007-25000AF1102PXXX*	-	-	ELM 0.075-250/00/AF* 10849201102	ADE007-25R9A2
DA-0.16L-250BAR-10849301102 DA-016-25000AF1102PXXX*	-	-	ELM 0.16-250/00/AF* 10849301102	ADE016-25R9A2
DA-0.32L-210BAR-10986601102 DA-032-21000AF1102PXXX*	E95 (1) 20250803648	-	ELM 0.32-210/00/AF* 10986601102	ADE032-21R9A2
DA-0.50L-210BAR-10849501102 DA-050-21000AF1102PXXX*	E106 (1) 20250903648	-	ELM 0.5-210/00/AF* 10849501102	ADE050-21R9A2
DA-0.50L-210BAR-10849601102 DA-050-21000CF1102PXXX*	E106 (1) 20250903648	M33x1.5 10945700100	ELM 0.5-210/00/CF* 10849601102	
DA-0.75L-210BAR-10849701102 DA-075-21000AF1102PXXX*	E114 (1) 20251003648	-	ELM 0.75-210/00/AF* 10849701102	ADE075-21R9A2
DA-0.75L-210BAR-10849801102 DA-075-21000CF1102PXXX*	E114 (1) 20251003648	M33x1.5 10945700100	ELM 0.75-210/00/CF* 10849801102	
DA-0.75L-350BAR-10931801102 DA-075-35000AF1102PXXX*	E136 (1) 20251103648	-	ELM 0.75-350/00/AF* 10931801102	
DA-0.75L-350BAR-10931901102 DA-075-35000CF1102PXXX*	E136 (1) 20251103648	M33x1.5 10945700100	ELM 0.75-350/00/CF* 10931901102	

(2) For other fluids consult Parker

* According to Article 4.3 PED 2014/68/EU

Form A/ Form B

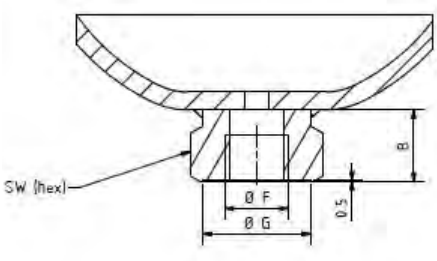

Form C/ Form D

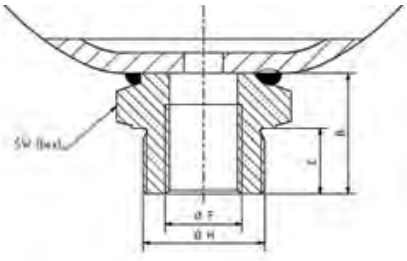

Gas Valve

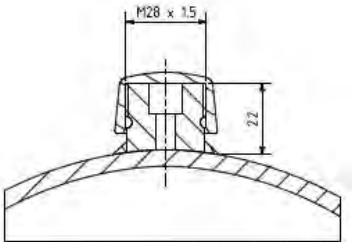

Type Part number	**Effective Gas vol.** Litres	**Max. Working pressure (PS)** bar	**Temp. Min/ Max** (°C)	**Max. Pre-charge** bar	**Max compres-sion in bar ratio P2/P0**	**Max Pressure amplitude P2-P1**	**Weight** kg	**Dimensions in mm**						**Oilport**	
								A max Height	**B**	**C**	**SW**	**D**	**G**	**F**	**H**
DA-0.075L-250BAR-10849201102	0.075	250	-35/+80	130	8	210	0.7	112	20		32	64	29	G½	-
DA-0.16L-250BAR-10849301102	0.16	250	-35/+80	130	6	210	1	120	20		32	75	29	G½	-
DA-0.32L-210BAR-10986601102	0.32	210	-35/+80	130	8	140	1.4	135	20		32	92	29	G½	-
DA-0.50L-210BAR-10849501102	0.5	210	-35/+80	130	8	175	2	153	22		41	107	34	G½	-
DA-0.50L-210BAR-10849601102	0.5	210	-35/+80	130	8	175	2	164	33	18	41	107	-	G½	M33x1.5
DA-0.75L-210BAR-10849701102	0.75	210	-35/+80	130	8	175	2.6	167	22		41	122	34	G½	-
DA-0.75L-210BAR-10849801102	0.75	210	-35/+80	130	8	175	2.6	178	33	18	41	122	-	G½	M33x1.5
DA-0.75L-350BAR-10931801102	0.75	350	-35/+80	130	8	150	4	174	22		41	128	34	G½	-
DA-0.75L-350BAR-10931901102	0.75	350	-35/+80	130	8	150	4	185	33	18	41	128	-	G½	M33x1.5

Lock-nut

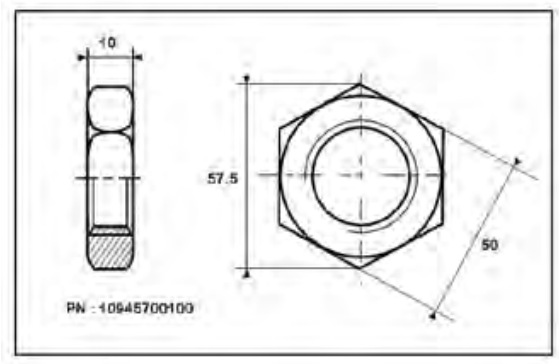

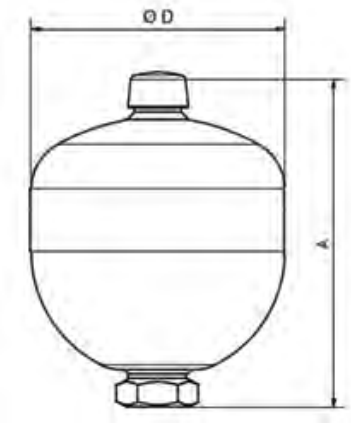

DA Series 140 - 350 BAR, 1 to 1.4 Litres

ECO rubber mix (previous known as ELM range)

Standard Version (Carbon steel /mix **ECO**) compatible with mineral oils (2)
According to PED 2014/68/EU.

Product, Part numbers, Accessories

E-configurable product
visit Parker.com/acde

Type Part number	**Clamps** **Model (quantity)** **Part number**	Lock nut Model (quantity) Part number	**Cross Reference OLAER**	**Cross Reference ADE**
DA-1.00L-210BAR-10984701102 DA-100-21000AF1102PXXX*	E136 (1) 20251103648	-	ELM 1-210/00/AF* 10984701102	ADE100-21R9A2
DA-1.00L-210BAR-10984801102 DA-100-21000CF1102PXXX*	E136 (1) 20251103648	M33x1.5 10945700100	ELM 1-210/00/CF* 10984801102	
DA-1.00L-350BAR-11110901102 DA-100-35000AF1102PXXX*	E136 (1) 20251103648	-	ELM 1-350/00/AF* 11110901102	
DA-1.00L-350BAR-11111001102 DA-100-35000CF1102PXXX*	E136 (1) 20251103648	M33x1.5 10945700100	ELM 1-350/00/CF* 1111101102	
DA-1.40L-140BAR-10850201102 DA-140-14090AF1102PXXX	E155 (1) 20251203648	-	ELM 1.4-140/90/AF 10850201102	ADE140-14R9C2
DA-1.40L-140BAR-10850301102 DA-140-14090CF1102PXXX	E155 (1) 20251203648	M33x1.5 10945700100	ELM 1.4-140/90/CF 10850301102	
DA-1.40L-210BAR-10996501102 DA-140-21090AF1102PXXX	E155 (1) 20251203648	-	ELM 1.4-210/90/AF 10996501102	
DA-1.40L-210BAR-10996601102 DA-140-21090CF1102PXXX	E155 (1) 20251203648	M33x1.5 10945700100	ELM 1.4-210/90/CF 10996601102	
DA-1.40L-250BAR-11013201102 DA-140-25090AF1102PXXX	E155 (1) 20251203648	-	ELM 1.4-250/90/AF 11013201102	ADE140-25R9C2
DA-1.40L-250BAR-11013301102 DA-140-25090CF1102PXXX	E155 (1) 20251203648	M33x1.5 10945700100	ELM 1.4-250/90/CF 11013301102	
DA-1.40L-350BAR-10932101102 DA-140-35090AF1102PXXX	E160 (1) 20259003648	-	ELM 1.4-350/90/AF 10932101102	
DA-1.40L-350BAR-10932201102 DA-140-35090CF1102PXXX	E160 (1) 20259003648	M33x1.5 10945700100	ELM 1.4-350/90/CF 10932201102	

(2) For other fluids consult Parker

* According to Article 4.3 PED 2014/68/EU

Form A/ Form B

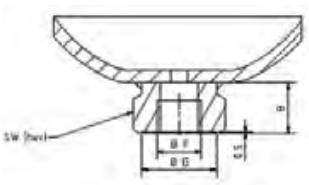

Form C/ Form D

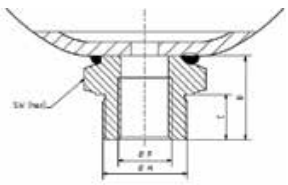

Gas Valve

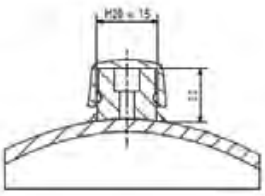

Tel: +45 63 12 83 00 | Email: ps@hymatik.com | www.hymatik.com | Hvidkaervej 27a, DK-5250 Odense SV, Denmark

Type Part number	Effective Gas vol. Litres	Max. Working pressure (PS) bar	Temp. Min/ Max (°C)	Max. Pre-charge bar	Max com-pression in bar ratio P2/P0	Max Pressure amplitude P2-P1	Weight kg	Dimensions in mm						Oilport	
								A max Height	B	C	SW	D	G	F	H
DA-1.00L-210BAR-10984701102	1	210	-35/+80	130	8	170	4	182	22		41	136	34	G½	-
DA-1.00L-210BAR-10984801102	1	210	-35/+80	130	8	170	4	192	33	18	41	136	-	G½	M33x1.5
DA-1.00L-350BAR-11110901102	1	350	-35/+80	130	8	150	5	200	22		41	129	34	G½	-
DA-1.00L-350BAR-11111001102	1	350	-35/+80	130	8	150	5	211	33	18	41	129		G½	M33x2
DA-1.40L-140BAR-10850201102	1	140	-35/+80	130	8	120	4	192	22		41	147	34	G½	-
DA-1.40L-140BAR-10850301102	1	140	-35/+80	130	8	120	4	203	33	18	41	147	-	G½	M33x1.5
DA-1.40L-210BAR-10996501102	1	210	-35/+80	130	8	120	4	192	22		41	148	34	G½	-
DA-1.40L-210BAR-10996601102	1	210	-35/+80	130	8	120	4	203	33	18	41	148	-	G½	M33x1.5
DA-1.40L-250BAR-11013201102	1	250	-35/+80	130	8	140	5	196	22		41	152	34	G½	
DA-1.40L-250BAR-11013301102	1	250	-35/+80	130	8	140	6	207	33	18	41	152	-	G½	M33x1.5
DA-1.40L-350BAR-10932101102	1	350	-35/+80	130	8	150	7	199	22		41	156	34	G½	
DA-1.40L-350BAR-10932201102	1	350	-35/+80	130	8	150	7	221	44	18	44	156	-	G½	M33x1.5

Lock-nut

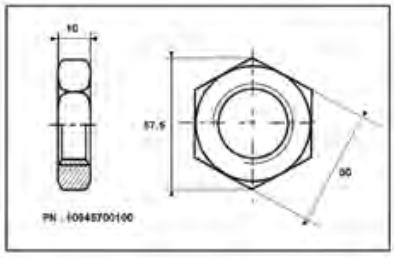

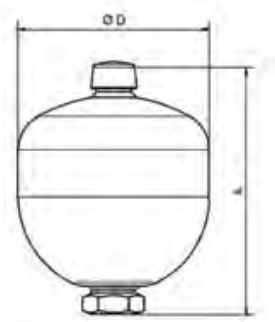

Tel: +45 63 12 83 00 | Email: ps@hymatik.com | www.hymatik.com | Hvidkaervej 27a, DK-5250 Odense SV, Denmark

DA Series 140 - 350 BAR, 2 to 3.5 Litres

ECO rubber mix (previous known as ELM range)

Standard Version (Carbon steel /mix **ECO**) compatible with mineral oils (2)
According to PED 2014/68/EU.

E-configurable product
visit Parker.com/acde

Product, Part numbers, Accessories

Type Part number	**Clamps** **Model (quantity)** **Part number**	Lock nut Model (quantity) Part number	**Cross Reference OLAER**	**Cross Reference ADE**
DA-2.00L-100BAR-10850401102 DA-200-10090AF1102PXXX	E155 (1) 20251203648	-	ELM 2-100/90/AF 10850401102	
DA-2.00L-250BAR-11013401102 DA-200-25090BF1102PXXX	E155 (1) 20251203648	-	ELM 2-250/90/AF 11013401102	
DA-2.00L-350BAR-11006001102 DA-200-35090BF1102PXXX	E160 (1) 20259003648	-	ELM 2-350/90/AF 11006001102	
DA-2.00L-350BAR-11006101102 DA-200-35090DF1102PXXX	E160 (1) 20259003648	M45X1.5	ELM 2-350/90/CF 11006101102	
DA-2.80L-250BAR-10887901102 DA-280-25090BF1102PXXX	E168 (1) 20251303648	-	ELM 2.8-250/90/AF 10887901102	ADE280-25R9C2
DA-2.80L-350BAR-10975801102 DA-280-35090BF1102PXXX	E180 (1) 20243203625	-	ELM 2.8-350/90/AF 10975801102	
DA-2.80L-350BAR-10975901102 DA-280-35090DF1102PXXX	E180 (1) 20243203625	M45X1.5	ELM 2.8-350/90/CF 10975901102	
DA-3.50L-250BAR-10850501102 DA-350-25090BF1102PXXX	E168 (1) 20251303648	-	ELM 3.5-250/90/AF 10850501102	ADE350-25R9C2
MBSP 3,5-350 350-1315-032-741	E180 (1) 20243203625	-	ELM 3.5-350/90/AF 10984901102	
MBSP 3,5-350 350-1315-022-741	E180 (1) 20243203625	M45X1.5	ELM 3.5-350/90/CF 10985001102	

(2) For other fluids consult Parker

* According to Article 4.3 PED 2014/68/EU

Form A/ Form B

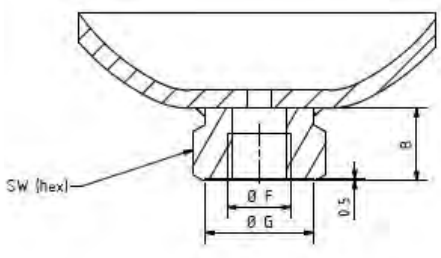

Form C/ Form D

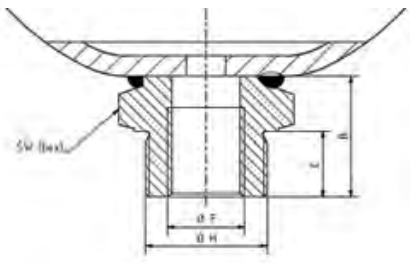

Gas Valve

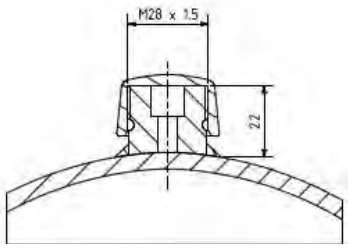

Type Part number	**Effective Gas vol.** Litres	**Max. Working pressure (PS)** bar	**Temp. Min/ Max** (°C)	**Max. Pre-charge** bar	**Max compres-sion in bar ratio P2/P0**	**Max Pressure amplitude P2-P1**	**Weight** kg	**Dimensions in mm**						**Oilport**	
								A max Height	**B**	**C**	**SW**	**D**	**G**	**F**	**H**
DA-2.00L-100BAR-10850401102	2.0	100	-35/+80	100	8	80	3.50	241	22		41	145	34	G½	
DA-2.00L-250BAR-11013401102	2.0	250	-35/+80	130	8	150	9.50	252	22		41	156	33	G3/4	
DA-2.00L-350BAR-11006001102	2.0	350	-35/+80	130	8	150	9.50	252	22		41	156	33	G3/4	
DA-2.00L-350BAR-11006101102	2.0	350	-35/+80	130	8	150	9.50	270	40	20	50	156	-	G3/4	M45x1.5
DA-2.80L-250BAR-10887901102	2.8	250	-35/+80	130	6	140	8.50	269	20		41	168	33	G3/4	
DA-2.80L-350BAR-10975801102	2.8	350	-35/+80	130	6	200	14.30	265	23		55	180	34	G3/4	
DA-2.80L-350BAR-10975901102	2.8	350	-35/+80	130	6	200	14.50	286	21	20	55	180	-	G3/4	M45x1.5
DA-3.50L-250BAR-10850501102	3.5	250	-35/+80	130	4	100	10.20	314	20		41	168	33	G3/4	
MBSP 3,5-350	3.5	350	-35/+80	130	4	200	16.00	305	23		55	180	34	G3/4	
MBSP 3,5-350	3.5	350	-35/+80	130	4	200	16.50	326	26	20	55	180	-	G3/4	M45x1.5

Lock-nut

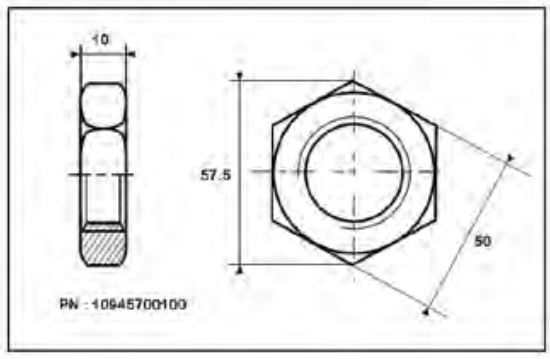

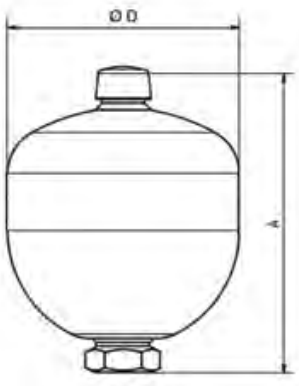

Above

Notes

Tel: +45 63 12 83 00 | Email: ps@hymatik.com | www.hymatik.com | Hvidkaervej 27a, DK-5250 Odense SV, Denmark

hymatik





aerospace
climate control
electromechanical
filtration
fluid & gas handling
hydraulics
pneumatics
process control
sealing & shielding





Accumulator Accessories

Clamps, Brackets, Charging Sets, Safety Blocks, Burst Discs



Parker OLAER

ENGINEERING YOUR SUCCESS.

Tel: +45 63 12 83 00 | Email: ps@hymatik.com | www.hymatik.com | Hvidkaervej 27a, DK-5250 Odense SV, Denmark

Clamps - carbon steel with zinc protection

Clamps : Carbon Steel with zinc plated protection, Rubber EPDM (Version 48), Rubber NBR Nitrile (Version 25)

Type Part number	Design	* Min to Max Tightening Ø mm	Accumulator Capacity (Litres)	Dimensions in mm											Mounting Bolts	Fixing Bolts Ø	Weight kg	* Tightening torque N.m	* max allowable weight if vertical equipment kg	*max allowable weight if horizontal equipment kg
				A	B	C	D	E	F	G Min/ Max		I	J	H						
A56 20149203625	E	54 to 56	EHV 0,2L	82	134	97	56	37	-	36	36	9	31	14	M10x80	8	0.45	7	10	30
E95 20250803648	E	87 to 97	DA 0,32L EHV 0.5L EBV0.5L	129	155	114	95	28	-	61.5	66.5	9	40	35	M8x75	8	0.30	7	30	90
E106 20250903648	E	99 to 109	DA 0,5L	140	155	114	106	28	-	68	73	9	40	35	M8x75	8	0.31	7	30	90
E114 20251003648	E	112 to 124	EBV&EHV 1/2.5/5L DA 0,75L210	155	155	114	114	28	-	73	78	9	40	35	M8x75	8	0.34	7	30	90
E136 20251103648	E	128 to 138	DA 0,75L 350 DA 1L	171	155	114	136	28	-	80	85	9	40	35	M8x75	8	0.35	7	30	90
E155 20251203648	E	146 to 157	DA 1,4 ELG 4L20	182	210	163	155	30	-	81	86.5	9	45	35	M10x80	8	0.52	10.5	60	60
E160 20259003648	E	155 to 165	DA 1,4L350 DA 2L	191	210	163	160	32	-	87	91.9	9	45	35	M10x80	8	0.54	10.5	60	60
E168 20251303648	E	166 to 176	EHV 4/6/10L DA2,8L/3,5L	202	210	163	168	30	-	92	96	9	45	35	M10x80	8	0.55	10.5	60	60
E180 20243203625	E	178 to 184	DA 3,5L350	209	210	163	180	35	-	97	100	9	65	35	M10x80	8	0.76	10.5	60	60
D215 20251403648	D	215 to 219	EBV 10/20/32/50L	243	266	216	215	36	300	123	125	15	40	21	M12x70	12 - 14	1.40	9	65	110
D226 20251503648	D	215 to 226	EHV 10 to 57 L	244	270	216	226	35	304	119	123	15	40	21	M12x80	12 - 14	1.40	11	75	150
D368 20127403625	D	363.5 to 370	EBV 100/200	394	420	340	370	35	450	196	201	15	40	21	M12x80	12 - 14	2.17	11	50	80

* Recommended

Design D

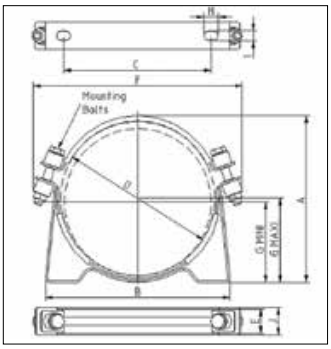

Design E

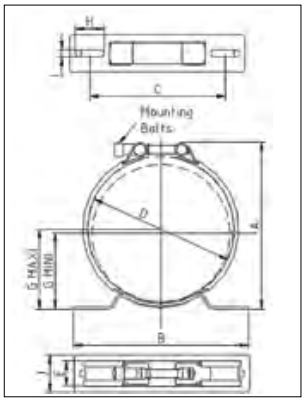

Clamps - stainless steel

Clamps : Stainless steel with nitrile rubber mouldings

Part number	Design	* Min to Max Tightening Ø mm	Dimensions in mm										Mounting Bolts	Fixing Bolts Ø	Weight kg
			A	B	C	D	E	F	G Min/ Max		I	H			
10957	A	91 to 93	108	140	90	91-93	25	140	52	53	11	11	M6x30	10	0.59
A21092N	C	93 to 97	112	126	90	93-97	30	-	59	61	9	13	M12x80	8	0.61
10981	C	112 to 116	140	144	100	112-116	30	-	68	70	9	13	M12x80	8	0.75
A211204N	B	116 to 124	150	140	100	116-124	30		70	74	9	13	M12x80	8	0.84
11078-DEE	B	116 to 125	135	141	100	116-125	30		64	69	9	13	M12x80	8	0.81
11074	A	135 to 140	155	160	120	135-140	25		73	76	11	11	M10x30	10	0.71
11071-DEE	A	144 to 146	182	164	120	144-146	30		81	82	11	11	M10x45	10	1.2
10982-DEE	B	168 to 172	190	186	145	168-172	40	240	96	98	9	13	M12x80	8	1.25
10983	B	218 to 230	250	272	211	218-230	40	306	121	127	15	21	M12x80	12	1.5
11069-1	A	241 to 245	265	278	220	241-245	30		129	131	11	11	M10x40	10	2
11060-DEE	A	266 to 268	270	295	220	266-268	30	345	143	144	11	11	M10x50	10	2

Design A

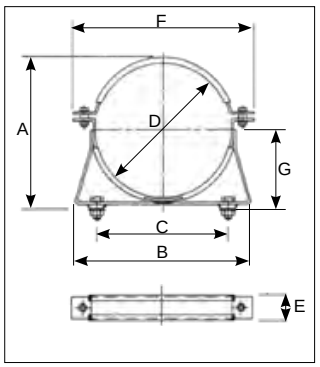

Design B

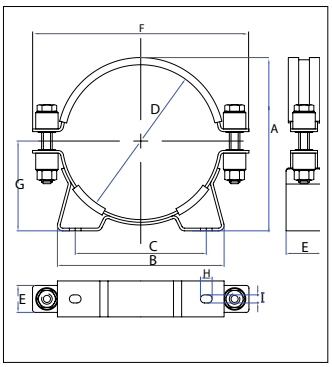

Design C

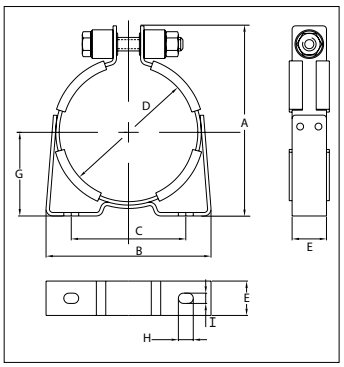

Support Brackets

Carbon steel with zinc plated, cushion ring in NBR (20) or CR (50)

Type Part number	Models	Dimensions in mm													Rubber cushion ring
		Design	A	B	C	H	I	J	K	L	M	N	R	S	Weight kg	
CE89* 20151903620	Accumulators 1 to 5 Litres	A	89	101	125	73	140	75	13	25	60	75	130	-	0.8	20173000050
CE108* 20118703620	EHV 4 & 6 & 10 Litres	A	108	120	150	92	175	95	17	25	80	160	210	-	1.5	20118600050
CE159A* 20109003620	Accumulators 10 to 50 Litres < 550 Bar	B	159	170	200	123	235	115	17	25	100	200	260	40	2.9	20109200020
CE300 20150800100	Accumulators 100-200 Litres	B	300	-	-	200	380	-	20	50	300	375	475	200	30	-

* including cushion ring

Shape A

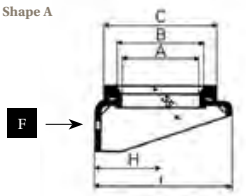

View following F

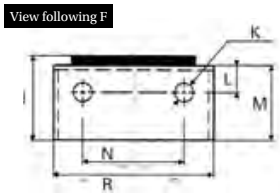

Shape B

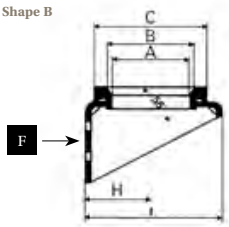

View following F

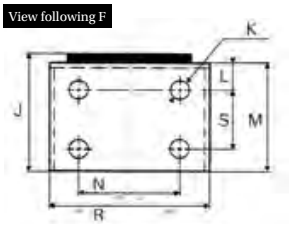

Lifting Eye

According Directive machine 2006/42/CE
Delivered with certificate

Type Part number	Models	A	B	Weight kg
LIFTING EYE DIA.22 10912700200	Accumulators equipped of valve stem DIA .22	146	M31x1	0.65
LIFTING EYE DIA. 50 09098800200	Accumulators equipped of valve stem DIA 50	173	M50x1,5	2.05
LIFTING EYE M79x2 08905900200	Accumulators equipped of valve stem DIA .80	173	M79x2	2.95

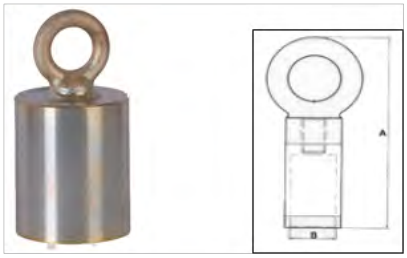

Mounting Frames

Type Part number	For models EHV	Dimensions in mm									Weight kg
		A	B	C	D	E	F	G	H	J	
EF1 20217500125	EHV 4 & 6 & 10 Litres	670	570	225	92	96	340	370	270	50	11
EF2 20217600125	EHV 10 & 12 & 20 & 24.5 Litres	670	570	285	123	115	340	370	270	50	18
EF3 20217700125	EHV 32 & 50 Litres	1405	1300	285	123	115	340	370	270	55	25

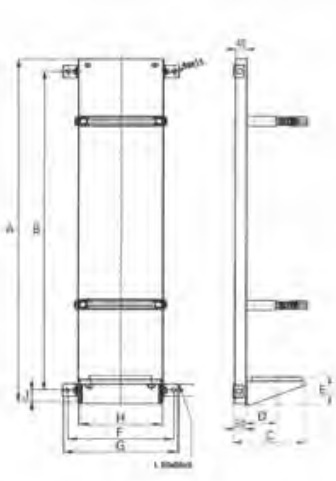

Charging Set VGU

The charging set VGU is an indispensable instrument for the verification, pressurization and nitrogen bleeding of most of the hydraulic accumulators available on the market. The standard set is delivered in a storage case containing the following:

- VGU universal tester and pressurizer (end M28 x 1.50).
- Pressure gauge kit from 0 to 25 bar.
- Pressure gauge kit from 0 to 250 bar.
- Connection adapters for inflation valves (7/8" – 5/8" – 8V1 - M28 x 1.50 G 1/4").
- High pressure hose, 2.5 m long, for connecting to a nitrogen source.
- Hexagon socket screw key 6mm.
- Spare parts kit including rings
- Operating instruction in French, English, German & Italian.

Note: On request, the following options are available:

- Pressure gauge kits with different scale divisions: 63mm with glycerol bath back end G1/4" cyl. equipped with direct gear for Minimess ® connection. Scale divisions 0-10, 0-60, 0-100, 0-400, with accuracy class 1.6%.
- High pressure hose of different length with adapters for nitrogen bottles from various countries (specify country), at each end with a female swivel coupling G1/4" for connecting to the inflation port.

Maximum working pressure: limited by the maximum operating pressure of the installed hydraulic system, pressure limited to **400 bar** in any case.

Type Part number	**Spare Parts**	
	High Pressure Hose	**Spare Part Kits**
	Type Part number	**Type** Part number
VGU/F.25/250.8.TS2.3 20214122823	TS2 (France) 20214800000	10774100023
VGU/F.25/250.8.TS3.3 20214122833	TS3 (Germany) 20228000000	10774100023
VGU/F.25/250.8.TS8.3 20214122883	TS8 (Italy) 20217200000	10774100023
VGU/F.25/250.8.TS9.3 20214122893	TS9 (Netherlands) 20227300000	10774100023
VGU/F.25/400.8.TS2.3 20214139823	TS2 (France) 20214800000	10774100023
VGU/F.25/400.8.TS3.3 20214139833	TS3 (Germany) 20228000000	10774100023
VGU/F.25/400.8.TS8.3 20214139883	TS8 (Italy) 20217200000	10774100023
VGU/F.25/400.8.TS9.3 20214139893	TS9 (Netherlands) 20227300000	10774100023

Spare parts Gauge KIT VGU

Type Part number
0 to 25 bar 00090300000
0 to 250 bar 00090500000
0 to 400 bar 00090600000

SPARE PARTS* Adaptors VGU

Type Part number
Adaptor 5/8" - 18 UNF 20213000223
Long Adaptor 7/8" - 14 UNF 20212700223
Short Adaptor 7/8" - 14 UNF 20213500223
Adaptor 1/4" cyl 20221100220
Coupling 8 V1 20214000200





Tel: +45 63 12 83 00 | Email: ps@hymatik.com | www.hymatik.com | Hvidkaervej 27a, DK-5250 Odense SV, Denmark

VGU Connections

Country	Type of Connection
ARGENTINA	B
AUSTRALIA	B
AUSTRIA	C/O
AZERBAIJAN	E/C/O
BELARUS	E/C/O
BELGIUM	A/C/O
BRAZIL	I
BULGARIA	E/A
CANADA	M/P
CHINA	F/J
CZECH REPUBLIC	C/O
DENMARK	C/O
FINLAND	C/O
FRANCE	A

Country	Type of Connection
GERMANY	C/O
GEORGIA	E/C/O
GREECE	A/B
HONG KONG	B
HUNGARY	A/Q
INDIA	B
INDONESIA	B
IRELAND	B
ITALY	N
JAPAN	G
KAZAKHSTAN	E/C/O
LUXEMBOURG	C/O
MALAYSIA	B
MEXICO	M/P/A

Country	Type of Connection
NEW ZEALAND	B
NORTH AFRICA	A
NORWAY	C/O
PHILIPPINES	L/B
POLAND	C
PORTUGAL	B
ROMANIA	A
RUSSIA	E/C/O
SINGAPORE	B
SLOVAKIA	C/O
SLOVENIA	C/O
SOUTH AFRICA	B
SOUTH KOREA	G
SPAIN	A

Country	Type of Connection
SWEDEN	C/O
SWITZERLAND	C/O
THAILAND	B
THE NETHERLANDS	C/O
TURKEY	B/C/O
UKRAINE	C/O
UNITED ARAB EMIRATES	A
UNITED KINGDOM	B
USA	M/P
VIETNAM	B

According to NF-E-29-664 Standard

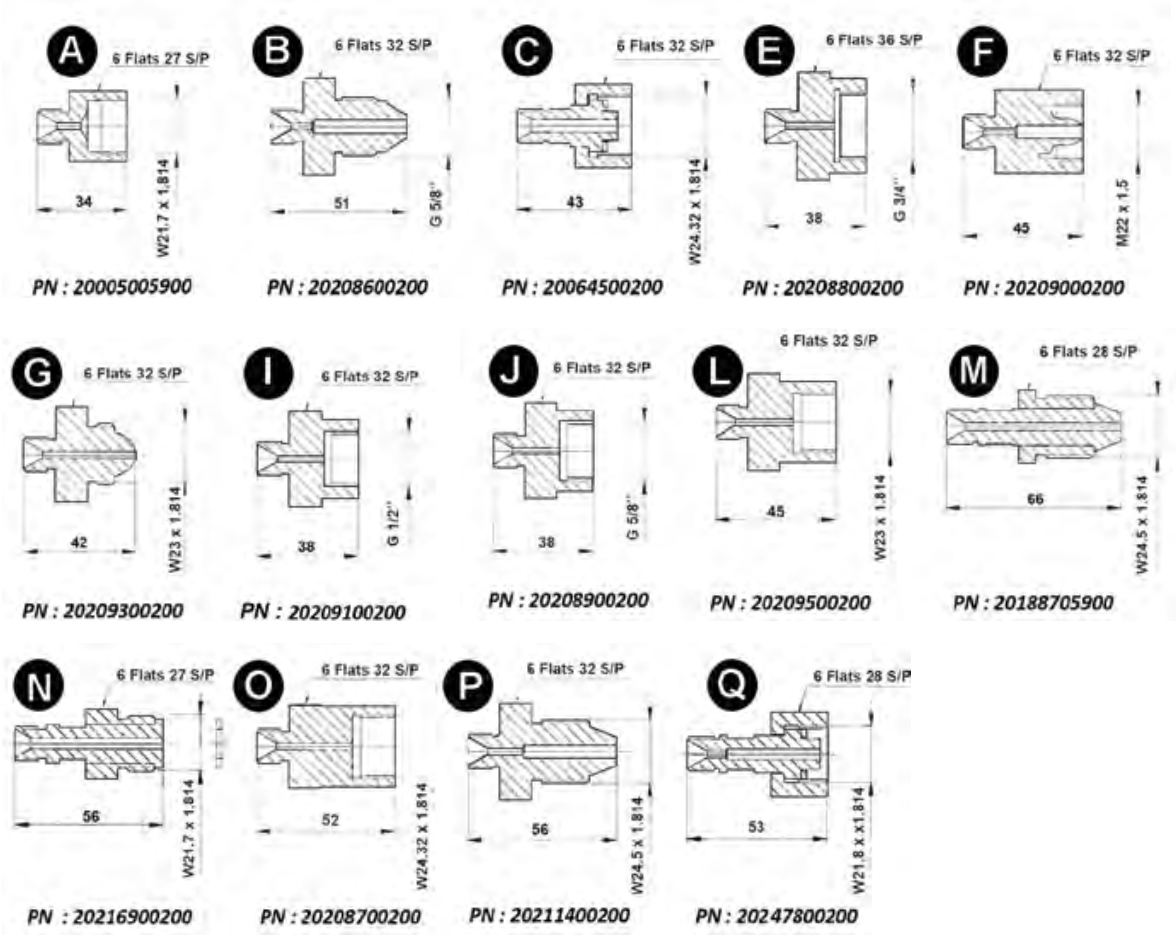

How to order a VGU Charging Set

VGU 25/250 8 TS2 3

Product Type
Type of Charging Set

Pressure Gauges
25/250
25/400

Connection Valve Stem
Code : 8 include following adaptors set

7/8" - 14 UNF (short)	5
7/8" - 14 UNF (long)	1
5/8" - 18 UNF	2
8V1	3
G 1/4" gas cylinder Following ISO 4570	8

High Pressure Hose

TS2 : connection for French bottle	A
TS3 : connection for German bottle	C
TS8 : connection for Italian bottle	N
TS9 : connection for Netherlands bottle	O

For other connections : consult Parker Olaer

Packaging
3: Plastic Box

Charging kit high pressure and "F gas valve"

Charging Sets

A charging set is an indispensable instrument for the verification, pressurization and nitrogen bleeding of most of the hydraulic accumulators available on the market. To use this unit, it is screwed on the gas charging valve of the accumulator and connected via a high pressure hose to the nitrogen source, equipped with a pressure regulator. If only the nitrogen pressure is to be controlled or reduced, this hose is not necessary.

Charging Sets (no case)



Specification

Part Number

10503 Composing:

- Carbon steel body
- Hose including fixed nitrogen adaptor (5/8" BSP Male)
- Bleed valve
- Pressure gauge
- Connection: ¼" BSP male coned to suit hose assembly



Charging Hose: 11774
Maximum Working Pressure: 345 bar
End Termination: 5/8" BSP male bullnose
Length: 2.5 metres

For assembly WITHOUT hose, part numbers become 10500-02, 10500-03 etc.

Part No	Pressure Range (bar)	Charging Set Contents		
		Pressure Gauge(s)		Charging Hose
		Pressure (bar)	Part No	
10500-02	0-25	0-25	45053-099	n/a
10500-03	0-60	0-60	45084-099	n/a
10500-04	0-160	0-160	45085-099	n/a
10500-05	0-250	0-250	45086-099	n/a
10500-07	0-400	0-400	45087-099	n/a
10503-02	0-25	0-25	45053-099	11774
10503-03	0-60	0-60	45084-099	11774
10503-04	0-160	0-160	45085-099	11774
10503-05	0-250	0-250	45086-099	11774
10503-07	0-400	0-400	45087-099	11774
10520-10	0-690	0-1000	45140-099	n/a
10523-10	0-690	0-1000	45140-099	55354-099

Charging Kits (with case)



Specification

Universal Charging Set:

10691-XX Composing:

- Charging set body
- Pressure Gauge (refer to table below)
- 1 x Charging Hose (refer to table below)



Charging Hose: 50096-099
Maximum Working Pressure: 345 bar
End Termination: 1/4" BSP female swivel
Length: 2.5 metres



Charging Hose: 54248-099
Maximum Working Pressure: 690 bar
End Termination: 1/4" BSP female swivel
Length: 2.5 metres

Part No	Pressure Range (bar)	Set/ Kit Contents			
		Pressure Gauge (S)		Charging Hose	Case
		Pressure (bar)	Part No		
10690-02	0-25	0-25	45053-099	50096-099	43183
10690-03	0-60	0-60	45084-099	50096-099	43183
10690-04	0-160	0-160	45085-099	50096-099	43183
10690-05	0-250	0-250	45086-099	50096-099	43183
10690-07	0-400	0-400	45087-099	50096-099	43183
10691-02	0-25	0-25	45053-099	11774	43183
10691-03	0-60	0-60	45084-099	11774	43183
10691-04	0-160	0-160	45085-099	11774	43183
10691-05	0-250	0-250	45086-099	11774	43183
10691-07	0-400	0-400	45087-099	11774	43183
10520-10	0-690	0-1000	45140-099	n/a	n/a
10693-10	0-690	0-1000	45140-099	54248-099	n/a
10694-10	0-690	0-1000	45140-099	n/a	43183
10692-10	0-690	0-1000	45140-099	54248-099	43183

Optional Extras

Country	Part No.	Description
UK	50094-099	Nitrogen Cylinder Adaptor ¼"BSP (M) x 5/8"BSP (M)
	50096-099	Charging Hose ¼"BSP (F) 345 bar x 2.5m long ¼"
	50097-099	both ends
	55354-099	Extension Adaptor for Charging Hose 345 bar Charging Hose ¼"BSP (F) 690B x 2.5m long

	Part No.	Description
Accessories	50032-V10	Charging Hose Adaptor ¼"BSP (M) x ¼"NPT (F)
	43183	Charging Set Carrier Box
	10127	Charging Block Elbow ¼"BSP (M)
	10128	Charging Block Elbow .302" x 32 TPI (M)
	11015	Tool Kit

Charging extender F1

Charging extender F1 is an indispensable instrument for test, pressurization and nitrogen discharge of bladder accumulator when space area limited.

It directly connects to charging VG devices

It includes :

- VG connection
- Nitrogen hose
- Nitrogen valve (for 5/8” UNF) connection

Part Number	VG connection	Designation
20226700000	M28x1.5	CHARGING EXTENDER WITH HOSE 0.65 Meter
20153200000	5/8”UNF	CHARGING EXTENDER WITH HOSE 0.65 Meter
20181500000	5/8”UNF	CHARGING EXTENDER WITH HOSE 2 Meters

Maxi pressure : 210 Bar

Accessories :

For 7/8” UNF bladder accumulator gas valve connection use :

Part Number	Designation
20255603623	Adaptor for 7/8” UNF bladder accumulator gas valve connection

Spare parts :

Part Number	Designation
08284200000	Closing valve PU 210 Bar



Tel: +45 63 12 83 00 | Email: ps@hymatik.com | www.hymatik.com | Hvidkaervej 27a, DK-5250 Odense SV, Denmark

Reducing valve for nitrogen bottle

Features

Operating temperature : -20°C à + 60°C

Dimensions : 238 x 110 x 128

Weight : 1, 7 kg

Nominal inlet pressure (P1) : 300 bar

Burst disc



Standard connection :

- Inlet (side nitogen bottle) DIA. 21,7 x 1,814 SI female
- Outlet (side charging set VG) DIA. 21,7 x 1,814 SI mâle

Materials :

Body : brass, valve seat : polyamide, seals EPDM

Maintenance :

A maintenance kit for duly qualified and authorized personnel is available and referenced in the data sheet delivered with the equipment

Part Number	Models	Nominal Pressure (bar)	Nominal Flow (Nm3/h)	Pressure range (bar)	Weight (kg)
00122200000	P25	25	140	1 - 25	1.7
00122300000	P200	200	650	40 - 200	1.7

Portable Nitrogen Station

To facilitate the maintenance of the accumulators, portable nitrogen stations consist of a nitrogen bottle equipped with a regulator and kept in a frame allowing easy transport and can be easily brought to the place of intervention

Technical characteristics

Part Number	Maximum Pressure (bar)	Volume (litres)	Dry weight (kg)	Dimensions (mm)
20174600000	25	5	12	L580-l240-H370
20125800000	200	5	12	L580-l240-H370
20268700000	25	15	24	L1100-l250-H410
20268800000	200	15	24	L1100-l250-H410

Maximum pressure of the bottle : 200 Bar
Regulator with manometer 0 to 400 B upstream
Outlet of bottle: DIA 21,7 x 1,814 SI

Spare parts :

Part Number	Designation
00122200000	Regulator P25
00122300000	Regulator P200

Volume: 15 Litres



Volume: 5 Litres



Nitrogen booster

- ♦ Lightweight
- ♦ Versatile
- ♦ Robust
- ♦ User friendly
- ♦ Intrinsically safe
- ♦ ATEX approved

It requires no electricity, only an air supply is needed to drive the booster. It can even be driven by the nitrogen gas i.e. it is selfsupporting.

It can fill accumulators up to 400 bar and nitrogen bottles can be emptied down to approximately 35 bar.

Technical Details

♦ Gas booster model 65385

♦ Single acting, double drive section.

♦ Note: (1) Maximum safe pressure is based on a min-imum 4:1 safety factor on the ultimate strength of the hardware exposed to this pressure.

♦ Approximate practical pressures based on 6,5 Bar drive and 35 Bar efficiency with nitrogen gas.

♦ Outlet 393 Bar (max)

♦ Inlet 28 Bar (min)

♦ Performance curves based on an air drive source of approximately 6,5 Bar 1/2" ID piping

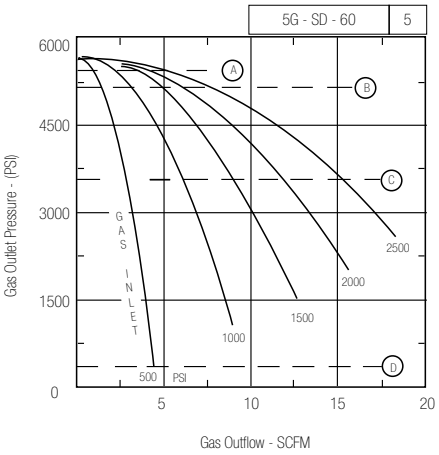

Dashed lines represent approximate air drive consumption.
A = 15 SCFM C = 50 SCFM
B = 20 SCFM D = 75 SCFM

Type	Safe Pressure		Displace-ment per cycle	Approximate outlet stall pressure	Envelope Dim.	Weight
Part Number	Outlet	Inlet	in cm3	(Bar)		(Kg)
	Bar Maxi	Bar Maxi				
65385	612	612	51	60 x drive Bar	(L) 30" (762mm) x (H) 14" (355mm) x (W) 12" (305mm)	31



Safety Blocks

Parker Olaer has developed a complete range of decompressing and isolating blocks (sizes 10 to 50) to answer all standard and special applications.

These blocks are in conformity with the European Directive on the equipment under pressure (97/23), these appliances have been designed to group together in a single compact unit all the components necessary for the correct operation of a hydraulic system equipped with hydropneumatic accumulators.

The basic block consists of :

- Isolating valve to isolate the accumulator from the circuit for all the blocks except from model DI 10 where it also ensures the decompression function.
- A drain valve for decompressing the accumulator for all models (except DI 10)
- A pressure relief valve EC with poppet calibrated generally to the maximum service pressure of the accumulator (under no circumstances must this appliance be used to protect the hydraulic pump)
- Pressure tapping port (M)

In the E version, the basic block, to decompress the accumulator, can be equipped with an electro-valve :

- 2 ways 2 positions (DI 10/DI 20/DI 32) cartridge type.
- 3 ways 2 positions (DI 16/DI 24) with impact of connection according to DIN 24340 Form A, ISO 4401 and CETOP RP 121 H.





DI Series: How to order a Safety Block

Type	Nominal size in mm	Discharge valve	Flow Control valve	Connection Accumulator side	Adjusting Pressure of relief valve in bar	Approval of relief valve	Seals Material	Electro-valve tension
DI	24	EY	S	6	250	C	V	230 V 50/60

Type DI

10, 16, 20, 24, 32

M: Manual
EY: Electrical, normally open (all models)
EX: Electrical, normally closed (DI10/DI20/DI32)

S: Without
R: With limitor (consult Parker Olaer)

O: Without connection
* Other connections: consult pages 184-192

Standard: 40/80/100/210/250/330/350
Other Value: consult Parker

C: with EC approvement

V : In standard viton
For other options please consult us

00: without electro-valve
24VDC
230V50/60
Other tensions: consult Parker

Tel: +45 63 12 83 00 | Email: ps@hymatik.com | www.hymatik.com | Hvidkaervej 27a, DK-5250 Odense SV, Denmark

D10 - DI16 - DI20 - DI24 - DI32

Models	Application	Drawing	A	B	Sealing					Order code
					JT1 (angle)	JT2 (piston)	JT3	JT4	BS/FS	
DI10 MS/ES DI20 MS/ES	DA 0.075-250/ 0.16-250/ 0.32-210	6	G 1/2"	20	-	-	29 x 3	-	28.7 x 21.5 x 2.5	5
	DA	7	G 1/2"	20	22 x 3	-	29 x 3	-	-	4
	DA	6	G 3/4"	20	-	-	29 x 3	-	32 x 27 x 1.5	6
	EHV 0.5 to 1.6 L	5	G 3/4"	18	-	17 x 3	29 x 3	-	-	2
	EHV 2.5 to 10 L (350 bar)	5	G1 1/4"	19	-	30 x 3	29 x 3	-	-	1
	EHV 10 to 50 L	5	G2"	365	-	48 x 3	29 x 3	-	-	3
DI16 MS/ES	EHV 0.5 to 1.6 L	2	G 3/4"	30	21.3 x 2.5	-	32 x 2	-	-	2
	EHV 0.5 to 1.6 L	4	G 3/4"	30	-	16.9 x 2.7	32 x 2	-	-	F
	EHV 2.5 to 10 L (350 bar)	2	G1 1/4"	30	36.2 x 3	-	32 x 2	-	-	1
	EHV 2.5 to 10 L (350 bar)	4	G1 1/4"	30	-	30 x 3	32 x 2	-	-	D
	EHV 10 to 50 L	3	G2"	96	36.2 x 3	-	32 x 2	54 x 3	-	3
	EHV 10 to 50 L	4	G2"	116	-	48 x 3	32 x 2	-	-	7
	EHVF 10 to 50 L	1	1 1/2"-6000	33	-	-	32 x 2	-	-	J
	EHVF 2.5 to 10 L (350 bar)	1	1 1/4"-3000	33	-	-	32 x 2	-	-	K
	EHVF 2.5 to 10 L (350 bar)	1	1"-6000	33	-	-	32 x 2	-	-	K
DI24 MS/ES	EHV 0.5 to 1.6 L	2	G 3/4"	35	21.3 x 2.4	-	48 x 3	-	-	2
	EHV 2.5 to 10 L (350 bar)	2	G1 1/4"	35	36.2 x 3	-	48 x 3	-	-	1
	EHV 2.5 to 10 L (350 bar)	4	G1 1/4"	35	-	30 x 3	48 x 3	-	-	F
	EHV 10 to 50 L	2	G2"	35	54 x 3	-	48 x 3	-	-	3
	EHV 10 to 50 L	4	G2"	35	-	48 x 3	48 x 3	-	-	D
	EBV 100 to 200 L + Piston Accumulator	3	G2"	80	54 x 3	-	48 x 3	54 x 3	-	7
	EHVF 10 to 50 L	1	2"-3000	45	-	-	48 x 3	-	-	J
	EHVF 10 to 50 L	1	1 1/2"-6000	45	-	-	48 x 3	-	-	J
	EHVF 2.5 to 10 L (350 bar)	1	1 1/4"-3000	45	-	-	48 x 3	-	-	K
	EHVF 2.5 to 10 L (350 bar)	1	1"-6000	45	-	-	48 x 3	-	-	K
DI32 MS/ES	EHV 0.5 to 1.6 L	4	G 3/4"	30	-	17 x 3	37.2 x 3	-	-	2
	EHV 2.5 to 10 L	4	G1 1/4"	30	-	30 x 3	37.2 x 3	-	-	1
	EHV 10 to 50 L	4	G2"	30	-	48 x 3	37.2 x 3	-	-	3

Above dimensions are in mm and are subject to manufacturing tolerances.

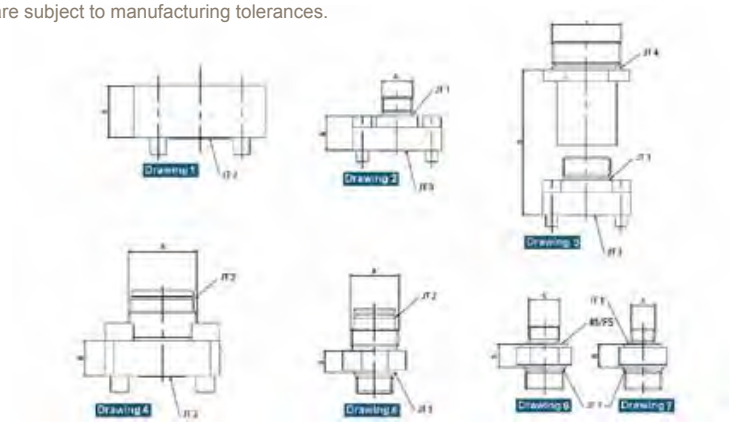

Safety Block DI 10

TECHNICAL DATA DI 10

- **Size:** Nominal diameter : 10 mm
- **Maxi working pressure:** Manual version : 400 bar
  Electrical version : 350 bar
- **Weight without connector:** Manual version : 3,5 kg
  Electrical version : 4 kg
- **Materials:** Carbon steel
  According to PED suitable for fluids group 2
- **Temperature:** Manual version : - 10°C à + 70°C
  Electrical version : - 10°C à + 60°C (ambient temperature)
- **Electrical data:** DC : 24 V AC : 230 V-50/60 Hz Standard protection : IP 65
  Standard protection : IP 65
  Standard connector : DIN 43650
- **Connection accumulator side:** See page 233
- **Pressure / return connector of circuit:** See drawing
- **Pressure relief valve EC marked :** 10 mm(nominal dia)
- **Flow:** Consult the diagram
  Pressure relief valve sealed delivered with declaration of manufacturing conformity

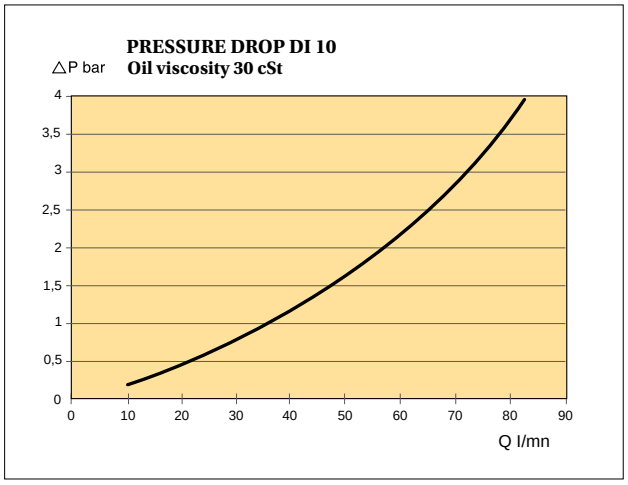

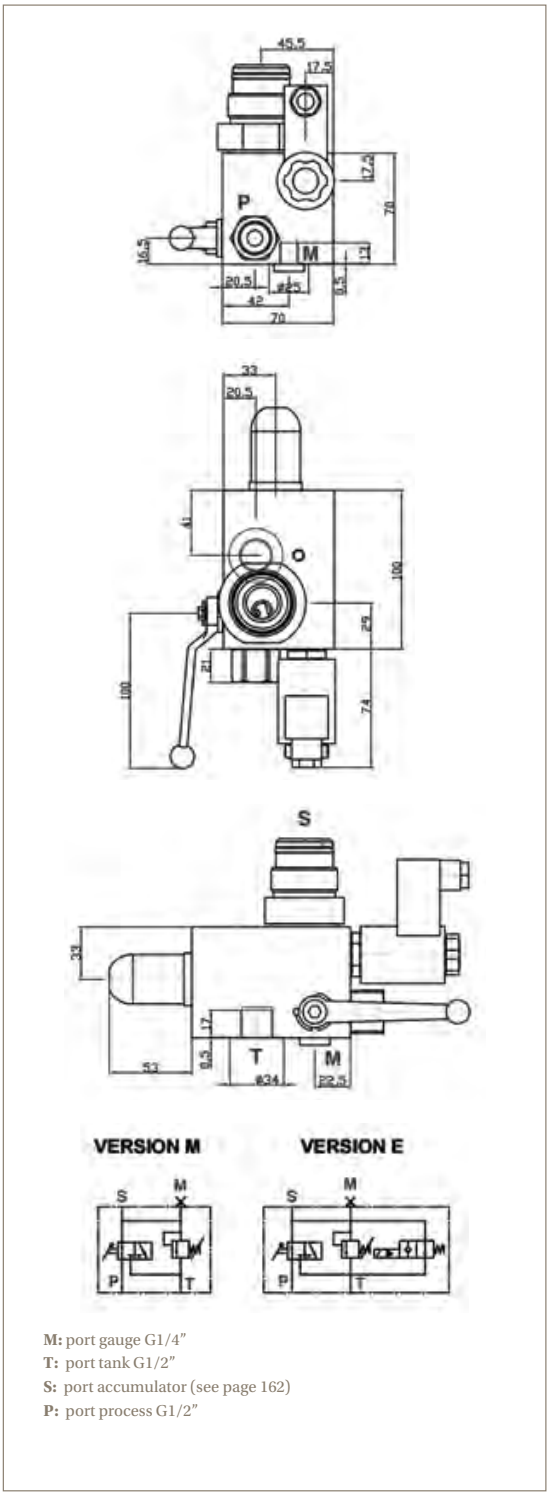

M: port gauge G1/4"
T: port tank G1/2"
S: port accumulator (see page 162)
P: port process G1/2"

Above dimensions are in mm and are subject to manufacturing tolerances.

Tel: +45 63 12 83 00 | Email: ps@hymatik.com | www.hymatik.com | Hvidkaervej 27a, DK-5250 Odense SV, Denmark

Safety Block DI 10 Manual Version

Standard version (Carbon steel, rings VITON) temperature -10°C up to 70°C
Maximum working pressure : 350 Bar.
According to PED 2014/68/EU

Connecting to accumulator	Type	Part number
EHV 0,5 up to 1,6 L G3/4" 210 B	DI10MS/2/210CV	35172112G02
EHV 0,5 up to 1,6 L G3/4" 330 B	DI10MS/2/330CV	35172112J02
EHV 0,5 up to 1,6 L G3/4" 350B	DI10MS/2/350CV	35172112Y02
EHV 2,5 up to 10 L G1"1/4 100 B	DI10MS/1/100CV	35172111D02
EHV 2,5 up to 10 L G1"1/4 210 B	DI10MS/1/210CV	35172111G02
EHV 2,5 up to 10 L G1"1/4 250 B	DI10MS/1/250CV	35172111H02
EHV 2,5 up to 10 L G1"1/4 330 B	DI10MS/1/330CV	35172111J02
EHV 2,5 up to 10 L G1"1/4 350 B	DI10MS/1/350CV	35172111Y02
EHV 10 up to 50 L G2" 210 B	DI10MS/3/210CV	35172113G02
EHV 10 up to 50 L G2" 250 B	DI10MS/3/250CV	35172113H02
EHV 10 up to 50 L G2" 330 B	DI10MS/3/330CV	35172113J02

Connecting to accumulator	Type	Part number
DA G1/2" 100 B	DI10MS/4/100CV	35172114D02
DA G1/2" 140 B	DI10MS/4/140CV	35172114Q02
DA G1/2" 210 B	DI10MS/4/210CV	35172114G02
DA G1/2" 250 B	DI10MS/4/250CV	35172114H02
DA G1/2" 330 B	DI10MS/4/330CV	35172114J02
DA G1/2" 350 B	DI10MS/4/350CV	35172114Y02
DA 0,32 210 B	DI10MS/5/210CV	35172115G02
DA 0,075/0,16 - 250 B	DI10MS/5/250CV	35172115H02
DA G3/4" 100 B	DI10MS/6/100CV	35172116D02
DA G3/4" 140 B	DI10MS/6/140CV	35172116Q02
DA G3/4" 210 B	DI10MS/6/210CV	35172116G02
DA G3/4" 250 B	DI10MS/6/250CV	35172116H02
DA G3/4" 330 B	DI10MS/6/330CV	35172116J02
DA G3/4" 350 B	DI10MS/6/350CV	35172116Y02

Other pressure setup on request

Safety Block DI 10 Electrical Version

Standard version (Carbon steel, rings VITON) temperature -10°C up to 60°C
Maximum working pressure : 350 Bar.
According to PED 2014/68/EU

Connecting to accumulator	With Electro-valve tension 24VDC	
	Type	Part number
EHV 0,5 up to 1,6 L G 3/4" 350 B	DI10EYS/2/350CV24VCC	35172132Y22
EHV 2,5 up to 10 L G1"1/4 350 B	DI10EYS/1/350CV24VCC	35172131Y22
DA G1/2" 210 B	DI10EYS/4/210CV24VCC	35172134G22
DA G3/4" 210 B	DI10EYS/6/210CV24VCC	35172136G22
DA G3/4" 250 B	DI10EYS/6/250CV24VCC	35172136H22

With Electro-valve tension 230V50/60	
Type	Part number
DI10EYS/2/350CV230V50/60	35172132Y62
DI10EYS/1/350CV230V50/60	35172131Y62
DI10EYS/4/210CV230V50/60	35172134G62

Spare parts

Type	Characteristics	Part number
RELIEF VALVE EC Size 10	100 BAR	35045931002
RELIEF VALVE EC Size 10	140 BAR	35045931402
RELIEF VALVE EC Size 10	210 BAR	35045932102
RELIEF VALVE EC Size 10	250 BAR	35045932502
RELIEF VALVE EC Size 10	330 BAR	35045933302
RELIEF VALVE EC Size 10	350 BAR	35045933502



Tel: +45 63 12 83 00 | Email: ps@hymatik.com | www.hymatik.com | Hvidkaervej 27a, DK-5250 Odense SV, Denmark

Safety Block DI 16

TECHNICAL DATA DI 16

- **Size:** Nominal diameter : 16 mm
- **Maxi working pressure:** Manual version : 350 bar
  Electrical version : 350 bar
- **Weight without connector:** Manual version : 4,3 kg
  Electrical version : 5,8 kg
- **Materials:** Carbon steel
  According to PED suitable with the fluids of group 2
- **Temperature:** Manual version : - 15°C à + 80°C
  Electrical version : - 15°C à + 60°C (ambient temperature)
- **Electrical data:** DC : 24 V AC : 230 V-50/60 Hz; 110 V-50/60 Hz
  Standard protection : IP 65
  Standard connector : DIN 43650
- Power consumption : 30 W
- **Connection accumulator side:** See page 233
- **Pressure / return connector of circuit:** See drawing
- **Pressure relief valve EC marked :** 6 mm (nominal dia)
- **Flow:** Consult the diagram
  Optional flow control valve on the block :Consult us.
  Pressure relief valve sealed delivered with declaration of manufacturing conformity

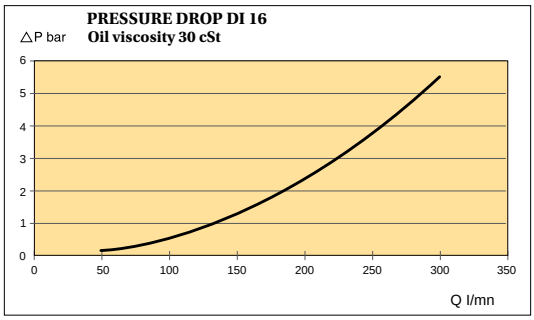



Minimess screw coupling
TYPE 1620

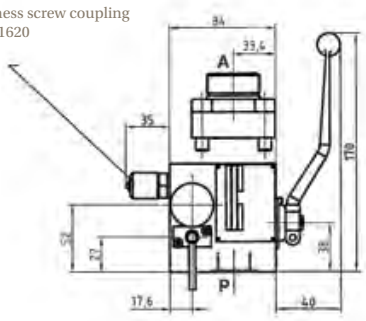

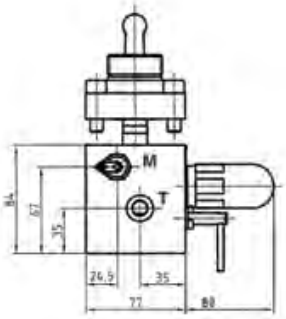

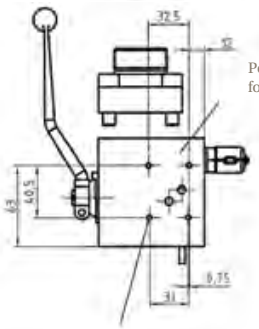

Positioning Cetop size 3
for clack electro-valve

VERSION E

View according to F

4 holes M5 - Depth of tapped 12 useful
Front hole depth : 16 on point

VERSION M

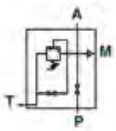

VERSION E

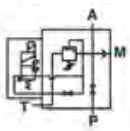

M: screw coupling G 1/4" delivered with Minimess 1620

T: port tank G1/4" flattened dept 1 for bonded seal

A: port accumulator (see page 162)

P: port process G3/4" flattened depth 1.5 for bonded seal

Tel: +45 63 12 83 00 | Email: ps@hymatik.com | www.hymatik.com | Hvidkaervej 27a, DK-5250 Odense SV, Denmark

Safety Block DI 16 Manual Version

Standard version (Carbon steel, seals VITON) temperature -15°C up to 80°C Maximum working pressure : 350 Bar.
According to PED 2014/68/EU

Connecting to accumulator	Type	Part number
EHV 0,5 up to 1,6 L G3/4" 210 B	DI16MS/2/210 CV	35128812G02
EHV 0,5 up to 1,6 L G3/4" 250 B	DI16MS/2/250 CV	35128812H02
EHV 0,5 up to 1,6 L G3/4" 330 B	DI16MS/2/330 CV	35128812J02
EHV 0,5 up to 1,6 L G3/4" 350 B	DI16MS/2/350 CV	35128812Y02
EHV 2,5 up to 10 L G1"1/4 210 B	DI16MS/1/210 CV	35128811G02
EHV 2,5 up to 10 L G1"1/4 250 B	DI16MS/1/250 CV	35128811H02
EHV 2,5 up to 10 L G1"1/4 330 B	DI16MS/1/330 CV	35128811J02
EHV 2,5 up to 10 L G1"1/4 350 B	DI16MS/1/350 CV	35128811Y02
EHV 10 up to 50 L G2" 210 B	DI16MS/3/210 CV	35128813G02
EHV 10 up to 50 L G2" 250 B	DI16MS/3/250 CV	35128813H02
EHV 10 up to 50 L G2" 330 B	DI16MS/3/330 CV	35128813J02
EHV 10 up to 50 L G2" 350 B	DI16MS/3/350 CV	35128813Y02

Safety Block DI 16 Electrical Version

Standard version (Carbon steel, seals VITON) temperature -15°C up to 60°C Maximum working pressure : 350 Bar.
According to PED 2014/68/EU. Pre-machine for Electro-valve installation.
For complete electrical safety block please add electro-valve price to DI16EYS
example : DI16EYS/1/330CV24VCC = P/N 35128831J02 + P/N 35157700281

Connecting to accumulator	without Electro-valve Tension	
	Type	Part number
EHV 0,5 up to 1,6 L G3/4" 210 B	DI16EYS/2/210 CV	35128832G02
EHV 0,5 up to 1,6 L G3/4" 250 B	DI16EYS/2/250 CV	35128832H02
EHV 0,5 up to 1,6 L G3/4" 330 B	DI16EYS/2/330 CV	35128832J02
EHV 0,5 up to 1,6 L G3/4" 350 B	DI16EYS/2/350 CV	35128832Y02
EHV 2,5 up to 10 L G1"1/4 210 B	DI16EYS/1/210 CV	35128831G02
EHV 2,5 up to 10 L G1"1/4 250 B	DI16EYS/1/250 CV	35128831H02
EHV 2,5 up to 10 L G1"1/4 330 B	DI16EYS/1/330 CV	35128831J02
EHV 2,5 up to 10 L G1"1/4 350 B	DI16EYS/1/350 CV	35128831Y02
EHV 10 up to 50 L G2" 210 B	DI16EYS/3/210 CV	35128833G02
EHV 10 up to 50 L G2" 250 B	DI16EYS/3/250 CV	35128833H02
EHV 10 up to 50 L G2" 330 B	DI16EYS/3/330 CV	35128833J02
	DI16EYS/3/350 CV	35128833Y02

Electro-Valve Options, Accessories , Spare Parts

Type	Electro valve tension	Part number
ELECTRO-VALVE T3	24 VCC	35157700281
ELECTRO-VALVE T3	110/120VA 50/60 Hz	35157800281
ELECTRO-VALVE T3	220/230VA 50/60 Hz	35157900281
FLOW CONTROL	R16	35141800281
FLANGE M 3/4" GAS CYL connection accumulator side		35054100281
FLANGE M 1"1/4 GAS CYL connection accumulator side		35054200281
FLANGE M 2" GAS CYL connection accumulator side		35103500281
RELIEF VALVE CE Size 6	210	35045732102
RELIEF VALVE CE Size 6	250	35045732502
RELIEF VALVE CE Size 6	330	35045733302
RELIEF VALVE CE Size 6	350	35045733502

Safety Block DI 20

TECHNICAL DATA DI 20

- **Size:** Nominal diameter : 20 mm
- **Maxi working pressure:** Manual version : 400 bar
  Electrical version : 350 bar
- **Weight without connector:** Manual version : 6,4 kg
  Electrical version : 6,9 kg
- **Materials:** Carbon steel
  According to PED suitable with the fluids of group 2
- **Temperature:** Manual version : - 15°C à + 70°C
  Electrical version : - 15°C à + 60°C (ambient temperature)
- **Electrical data:** DC : 24 V AC : 230 V-50/60 Hz
  Standard protection : IP 65
  Standard connector : DIN 43650
- **Connection accumulator side:** See page 233
- **Pressure / return connector of circuit:** See hydraulic drawing
- **Pressure relief valve EC marked :** 10 mm (nominal dia)
- **Flow:** Consult the diagram
  Pressure relief valve sealed delivered with declaration of manufacturing conformity

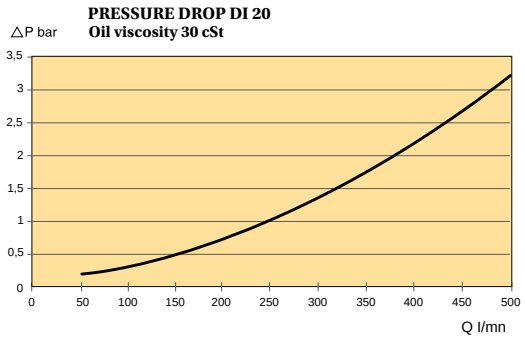

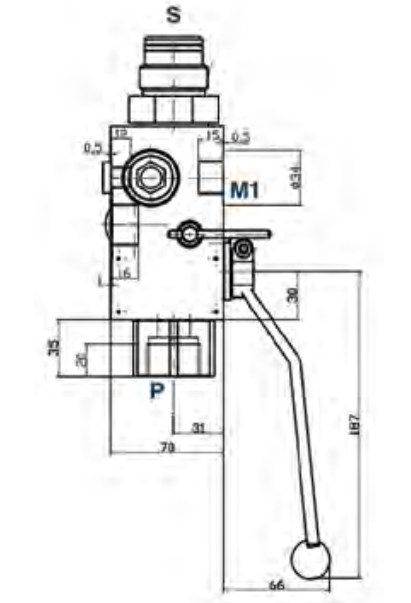

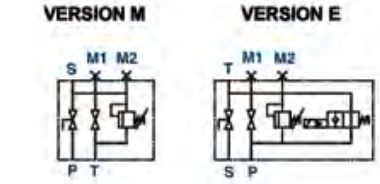

M1: port gauge G1/2"
M2: port gauge G1/4"
T: port tank G3/4"
S: port accumulator (see page 162)
P: port process G1"

Above dimensions are in mm and are subject to manufacturing tolerances.

Safety Block DI 20 Manual Version

Standard version (Carbon steel, seals VITON) temperature -15°C up to 70°C Maximum working pressure: 400 Bar
According to PED 2014/68/EU

Connecting to accumulator	Type	Part number
EHV 0,5 up to 1,6 L G3/4" 330 B	DI20MS/2/330CV	35172212J02
EHV 2,5 up to 10 L G1"1/4 350 B	DI20MS/1/350CV	35172211Y02
EHV 10 up to 50 L G2" 210 B	DI20MS/3/210CV	35172213G02
EHV 10 up to 50 L G2" 250 B	DI20MS/3/250CV	35172213H02
EHV 10 up to 50 L G2" 330 B	DI20MS/3/330CV	35172213J02

Safety Block DI 20 Electrical Version

Standard version (Carbon steel, seals VITON) temperature -15°C up to 60°C Maximum working pressure: 350 Bar
According to PED 2014/68/EU

Connecting to accumulator	With Electro-valve tension 230V50/60		With Electro-valve tension 24VDC	
	Type	Part number	Type	Part number
EHV 2,5 up to 10 L G1"1/4 330 B	DI20EYS/1/330CV230V50/60	35172231J62	DI20EYS/1/330CV24VCC	35172231J22
EHV 2,5 up to 10 L G1"1/4 350 B	DI20EYS/1/350CV230V50/60	35172231Y62	DI20EYS/1/350CV24VCC	35172231Y22
EHV 10 up to 50 L G2" 210 B	DI20EYS/3/210CV230V50/60	35172233G62	DI20EYS/3/210CV24VCC	35172233G22
EHV 10 up to 50 L G2" 250 B	DI20EYS/3/250CV230V50/60	35172233H62	DI20EYS/3/250CV24VCC	35172233H22
EHV 10 up to 50 L G2" 330 B	DI20EYS/3/330CV230V50/60	35172233J62	DI20EYS/3/330CV24VCC	35172233J22

Spare parts

Type	Characteristics	Part number
RELIEF VALVE CE Size 10	210 BAR	35045932102
RELIEF VALVE CE Size 10	250 BAR	35045932502
RELIEF VALVE CE Size 10	330 BAR	35045933302
RELIEF VALVE CE Size 10	350 BAR	35045933502



Safety Block DI 24

TECHNICAL DATA DI 24

- **Size:** Nominal diameter : 24 mm
- **Maxi working pressure:** Manual version : 350 bar
  Electrical version : 350 bar
- **Weight without connector:** Manual version : 9,5 kg
  Electrical version : 11 kg
- **Materials:** Carbon steel According to PED suitable for fluids group 2
- **Temperature:** Manual version : - 15°C à + 70°C
  Electrical version : - 15°C à + 50°C (ambient temperature)
- **Electrical data:** DC : 24 V AC : 230 V-50/60 Hz ; 110 V-50/60 Hz.
  Standard protection : IP 65
  Standard connector : DIN 43650
- Power consumption : 30 W
- **Connection accumulator side:** See page 233
- **Pressure / return connector of circuit:** See drawing
- **Pressure relief valve marked EC:** 10 mm (nominal dia)
- **Flow:** Consult the diagram

Pressure relief valve sealed delivered with declaration of manufacturing conformity

PRESSURE DROP DI 24
Oil viscosity 30 cSt

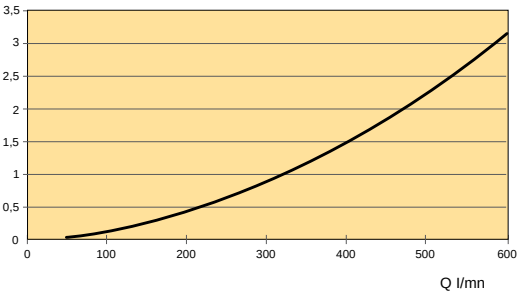



Above dimensions are in mm and are subject to manufacturing tolerances.

VERSION E

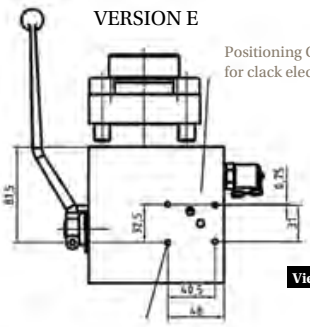

Positioning Cetop size 3
for clack electro-valve

View according to F

4 holes M5 - Depth of tapped 12 useful
Front hole depth : 16 on point

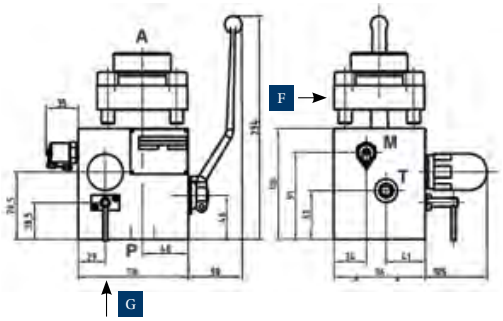

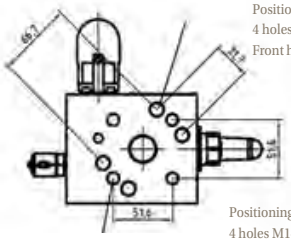

Positioning 1"1/4 SAE 6000
4 holes M14 - Depth of tapped 24 useful
Front hole depth : 31 on point

View according to G

Positioning Cetop 1"1/4 PN 400
4 holes M14 - Depth of tapped 24 useful
Front hole depth : 31 on point

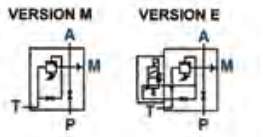

M: screw coupling G 1/4» with Minimess 1620
T: port tank G3/8"
Flattened ø 24,2 prof. depth : 1,5 for bonded seal
A: port accumulator (see page 162)
P: port process (see view according to G)

Tel: +45 63 12 83 00 | Email: ps@hymatik.com | www.hymatik.com | Hvidkaervej 27a, DK-5250 Odense SV, Denmark

Safety Block DI 24 Manual Version

Standard version (Carbon steel, seals VITON) temperature -15°C up to 70°C Maximum working pressure : 350 Bar.
According to PED 2014/68/EU

Connecting to accumulator	Type	Part number
EHV 2,5 up to 10 L G1"1/4 210 B	DI24MS/1/210CV	35129011G02
EHV 2,5 up to 10 L G1"1/4 250 B	DI24MS/1/250CV	35129011H02
EHV 2,5 up to 10 L G1"1/4 330 B	DI24MS/1/330CV	35129011J02
EHV 2,5 up to 10 L G1"1/4 350 B	DI24MS/1/350CV	35129011Y02
EHV 10 up to 50 L G2" 210 B	DI24MS/3/210CV	35129013G02
EHV 10 up to 50 L G2" 250 B	DI24MS/3/250CV	35129013H02
EHV 10 up to 50 L G2" 330 B	DI24MS/3/330CV	35129013J02
G2" 350 B	DI24MS/3/350CV	35129013Y02
ACCU PISTON 10 up to 50 L G2" & EBV 100 and 200 L	Consult Parker	

Safety Block DI 24 Electrical Version

Standard version (Carbon steel, seals VITON) temperature -15°C up to 50°C. Maximum working pressure : 350 Bar.
According to PED 2014/68/EU.
Pre-machine for Electro-valve installation.
For complete electrical safety block please add electro-valve price to DI24EYS
example : DI24EYS/1/330CV24VCC = P/N 35129031J02 + P/N 35157700281
Other pressure setup : on request

Connecting to accumulator	without the electro-valve tension	
	Type	Part number
EHV 2,5 up to 10 L G1"1/4 210 B	DI24EYS/1/210CV	35129031G02
EHV 2,5 up to 10 L G1"1/4 250 B	DI24EYS/1/250CV	35129031H02
EHV 2,5 up to 10 L G1"1/4 330 B	DI24EYS/1/330CV	35129031J02
EHV 2,5 up to 10 L G1"1/4 350 B	DI24EYS/1/350CV	35129031Y02
EHV 10 up to 50 L G2" 210 B	DI24EYS/3/210CV	35129033G02
EHV 10 up to 50 L G2" 250 B	DI24EYS/3/250CV	35129033H02
EHV 10 up to 50 L G2" 330 B	DI24EYS/3/330CV	35129033J02
G2" 350 B	DI24EYS/3/350CV	35129033Y02
PISTON ACCUMULATOR 10 up to 50 L G2"& EBV 100 and 200 L	Consult Parker	

Electro-Valve Options, Accessories , Spare Parts

Type	Electro valve tension	Part number
ELECTRO-VALVE T3	24 VCC	35157700281
ELECTRO-VALVE T3	110/120 V 50/60 Hz	35157800281
ELECTRO-VALVE T3	220/230 V 50/60 Hz	35157900281
FLOW CONTROL	R24	35067500281
FLANGE M 1"1/4 GAZ CYL CONNECTION ACCUMULATOR SIDE		10436600281
FLANGE M 2" GAZ CYL CONNECTION ACCUMULATOR SIDE		35037500281
RELIEF VALVE CE Size 10	210 BAR	35045932102
RELIEF VALVE CE Size 10	250 BAR	35045932502
RELIEF VALVE CE Size 10	330 BAR	35045933302
RELIEF VALVE CE Size 10	350 BAR	35045933502

Tel: +45 63 12 83 00 | Email: ps@hymatik.com | www.hymatik.com | Hvidkaervej 27a, DK-5250 Odense SV, Denmark

Safety Block DI 32

TECHNICAL DATA DI 32

- **Size:** Nominal diameter : 32 mm
- **Maxi working pressure:** Manual version : 400 bar
  Electrical version : 350 bar
  According to PED with the fluids of group 2
- **Weight without connector:** Manual version : 11,7 kg
  Electrical version : 12,2 kg
- **Materials:** Carbon steel according to PED suitable for fluids group 2
- **Temperature:** Manual version : - 10°C à + 70°C
  Electrical version : - 10°C à + 60°C (ambient temperature)
- **Electrical data:** DC : 24 V AC : 230 V-50/60 Hz
  Standard protection : IP 65
  Standard connector : DIN 43650
- **Connection accumulator side:** See page 233
- **Pressure / return connector of circuit:** See drawing
- **Pressure relief valve marked EC :** 10 mm (nominal dia)
- **Flow:** Consult the diagram

Pressure relief valve sealed delivered with declaration of manufacturing conformity

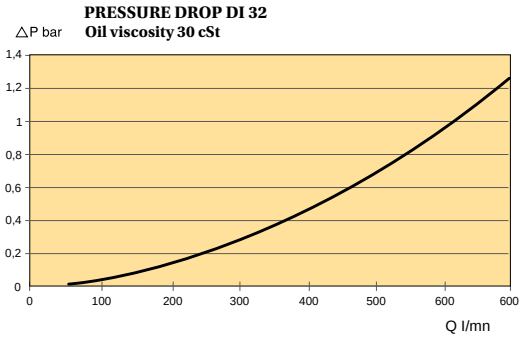

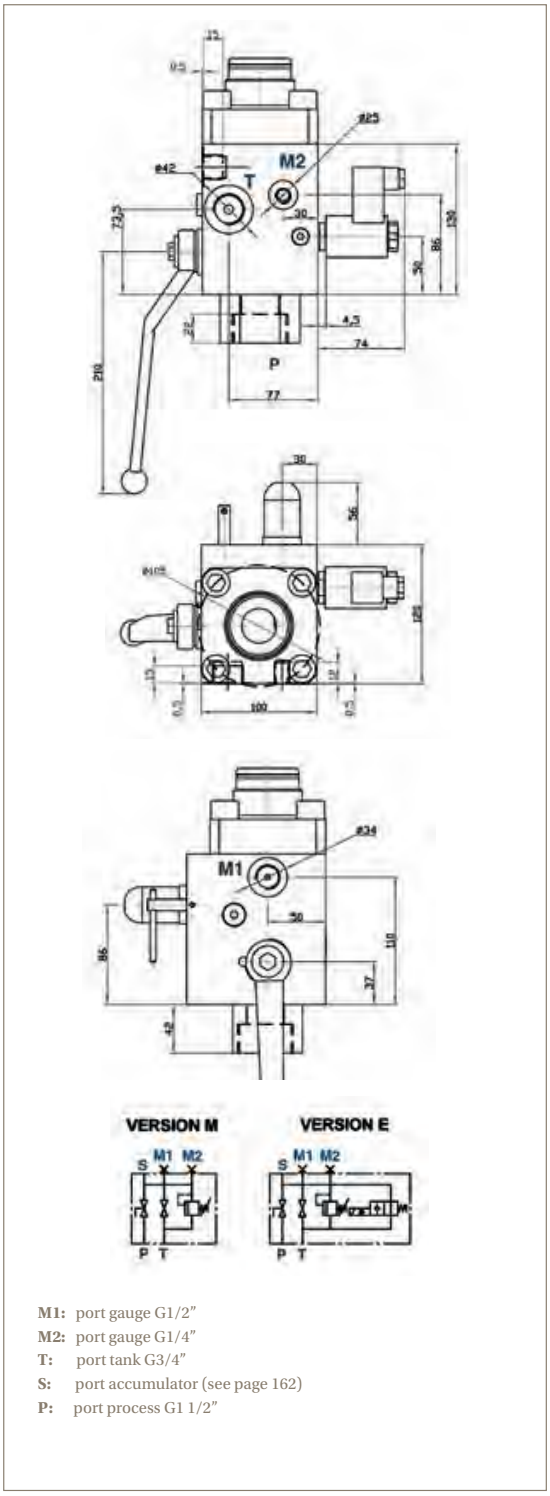

M1: port gauge G1/2"
M2: port gauge G1/4"
T: port tank G3/4"
S: port accumulator (see page 162)
P: port process G1 1/2"

Above dimensions are in mm and are subject to manufacturing tolerances.

Safety Block DI 32 Manual Version

Standard version (Carbon steel, seals VITON) temperature -10°C up to 70°C
Maximum working pressure: 400 Bar
According to PED 2014/68/EU

Connecting to accumulator	Type	Part number
EHV 2,5 up to 10 L G1"1/4 210 B	DI32MS/1/210CV	35172311G02
EHV 2,5 up to 10 L G1"1/4 250 B	DI32MS/1/250CV	35172311H02
EHV 2,5 up to 10 L G1"1/4 330 B	DI32MS/1/330CV	35172311J02
EHV 2,5 up to 10 L G1"1/4 350 B	DI32MS/1/350CV	35172311Y02
EHV 10 up to 50 L G2" 210 B	DI32MS/3/210CV	35172313G02
EHV 10 up to 50 L G2" 250 B	DI32MS/3/250CV	35172313H02
EHV 10 up to 50 L G2" 330 B	DI32MS/3/330CV	35172313J02

Safety Block DI 32 Electrical Version

Standard version (Carbon steel, seals VITON) temperature -10°C up to 60°C
Maximum working pressure: 350 Bar
According to PED 2014/68/EU

Connecting to accumulator	With Electro-valve tension 24VDC		With Electro-valve tensions 230V50/60	
	Type	Part number	Type	Part number
EHV 2,5 up to 10 L G1"1/4 210 B	DI32EYS/1/210CV24VCC	35172331G22	DI32EYS/1/210CV230V50/60	35172331G62
EHV 2,5 up to 10 L G1"1/4 250 B	DI32EYS/1/250CV24VCC	35172331H22	DI32EYS/1/250CV230V50/60	35172331H62
EHV 2,5 up to 10 L G1"1/4 330 B	DI32EYS/1/330CV24VCC	35172331J22	DI32EYS/1/330CV230V50/60	35172331J62
EHV 2,5 up to 10 L G1"1/4 350 B	DI32EYS/1/350CV24VCC	35172331Y22	DI32EYS/1/350CV230V50/60	35172331Y62
EHV 10 up to 50 L G2" 210 B	DI32EYS/3/210CV24VCC	35172333G22	DI32EYS/3/210CV230V50/60	35172333G62
EHV 10 up to 50 L G2" 250 B	DI32EYS/3/250CV24VCC	35172333H22	DI32EYS/3/250CV230V50/60	35172333H62
EHV 10 up to 50 L G2" 330 B	DI32EYS/3/330CV24VCC	35172333J22	DI32EYS/3/330CV230V50/60	35172333J62

Spare parts

Type	Characteristics	Part number
RELIEF VALVE CE Size 10	210 BAR	35045932102
RELIEF VALVE CE Size 10	250 BAR	35045932502
RELIEF VALVE CE Size 10	330 BAR	35045933302
RELIEF VALVE CE Size 10	350 BAR	35045933502



SBA Series Safety Block

TECHNICAL DATA SBA SAFETY BLOCK

- **Construction**

– shut-off valve: ball valve
– pressure relief: poppet-type valve with damping
– manually-operated discharge valve: poppet-type valve
– electrically-operated discharge valve: poppet-type valve (where fitted)

- **Port type -** see table below
- **Mounting position -** Accumulator port A facing upwards
- **Mounting screws (not supplied)**

M8 to grade 10.9, max. torque 26 + 4Nm

- **Ambient temperature :** -30°C to +80°C
- **Max. operating pressure:** 350 bar
- **Relief flow rate G at pnom:** see table below
- **Fluid:** Mineral oil according to DIN/ISO. For other fluid types, please contact the Parker.
- **Operating temperature :** -15°C to +80°C
- **Viscosity:** 10 to 800 mm2/s
- **Δp-Q-graphs:** see right side of this page
- **Electrical discharge:** U=24VDC, 105VDC (for 115V/60 Hz AC supply), P=26W, 100% ED, IP 65 to DIN 40050, connector to DIN 43650 type A
- **Finish:** Black zinc phosphated
- **Seal material:** Nitrile

Flow - Accumulator (A) to Pressure Port (P)

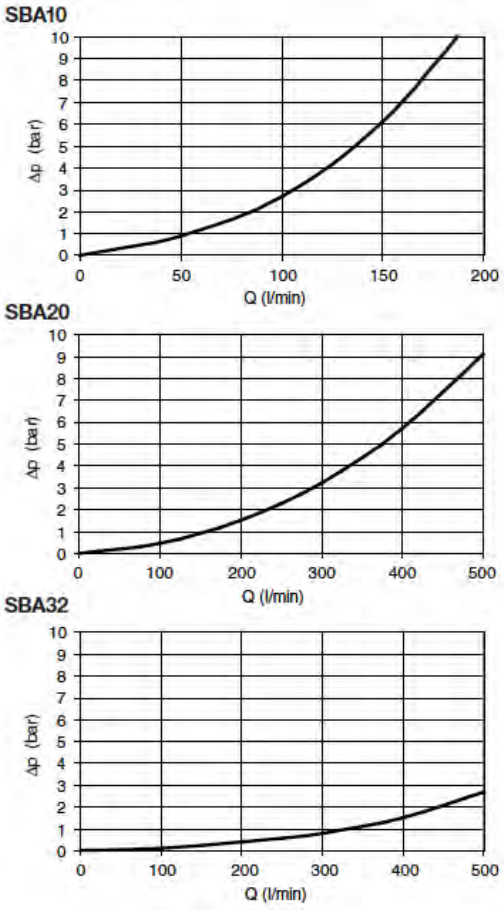

Dimensions and Weights

Type	A1	P	T	M1	M2	Weight (Kg)	Model Number2
10M	M33x2	G1/2	G3/8	G1/2	G1/4	44	SBA10MT1
10E	M33x2	G1/2	G3/8	G1/2	G1/4	47	SBA10ET1
20M	M33x2	G1	G1/2	G1/2	G1/4	60	SBA20MT1
20E	M33x2	G1	G1/2	G1/2	G1/4	65	SBA20ET1
32M	Flange	G1 1/2	G1	G1/2	G1/4	12	SBA32MT1
32E	Flange	G1 1/2	G1	G1/2	G1/4	126	SBA32ET1

[1] A range of adapters is available for accumulator port A – Consult Division
[2] xxx = pressure setting of pressure relief valve – Consult Division

SBA Type M
Manually-Operated Discharge Valve

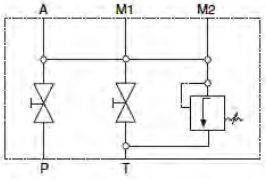

SBA Type E
Manually- and Electrically-Operated Discharge Valves

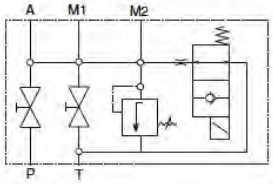

Tel: +45 63 12 83 00 | Email: ps@hymatik.com | www.hymatik.com | Hvidkaervej 27a, DK-5250 Odense SV, Denmark

SBA accessories

Pressure Relief Valve

The function of the pressure relief valve is to protect the accumulator in service. If pressure exceeds the relief valve setting, the valve lifts off its seat and fluid is discharged to tank, allowing pressure in the system to fall to a safe level.

Because of its cartridge design, the pressure relief valve can be readily replaced by a valve with a different pressure setting, selected from the table. A new approval under PED 2014/68/EU is not required following this change. The pre-set relief pressure, in bar, is stamped onto the identification plate.

Type Approval

The pressure relief valve is checked and security sealed following approval, according to pressure vessel regulations. It carries a CE mark, type approval number and serial number. All valves are supplied with a certificate showing the pressure setting.

The documents supplied with the pressure relief valve must be retained, as they will be required in the event of repeat tests.

Flow Limits for Safety Valve SV - All Models

Pressure P (bar)	Type	Item Number	
		Nitrile	Fluorelastomer
050	SV050	DBDS10K13/050/C	DBDS10K13/050V/C
070	SV070	DBDS10K13/070/C	DBDS10K13/070V/C
100	SV100	DBDS10K13/100/C	DBDS10K13/100V/C
120	SV120	DBDS10K13/120/C	DBDS10K13/120V/C
140	SV140	DBDS10K13/140/C	DBDS10K13/140V/C
160	SV160	DBDS10K13/160/C	DBDS10K13/160V/C
200	SV200	DBDS10K13/200/C	DBDS10K13/200V/C
210	SV210	DBDS10K13/210/C	DBDS10K13/210V/C
250	SV250	DBDS10K13/250/C	DBDS10K13/250V/C
280	SV280	DBDS10K13/280/C	DBDS10K13/280V/C
300	SV300	DBDS10K13/300/C	DBDS10K13/300V/C
330	SV330	DBDS10K13/330/C	DBDS10K13/330V/C

Flow Limits fo Safety Valve SV - All models

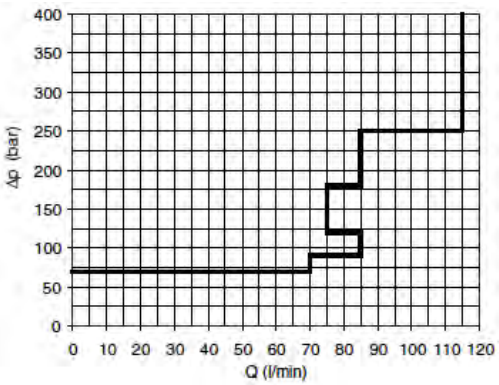

SBA Series: How to order a SBA Safety Block

SBA 10 M T 1 050

Type

SBA

Size

Code:	Size:
10	NG10
20	NG20
32	NG32

Discharge Valve

Code:	Discharge:
M	Manual
E	Manual + Electrical

Pressure Port

Code:	Pressure Port:
T	Thread

Seal Compound

Code:	Seals:
1	Nitrile
5	Fluoreslatomer

Pressure Setting

Code:	Pressure setting:
050	
070	
100	
120	
others available	
See table above	

TECHNICAL DATA SAFETY BLOCK

SBA10MT1

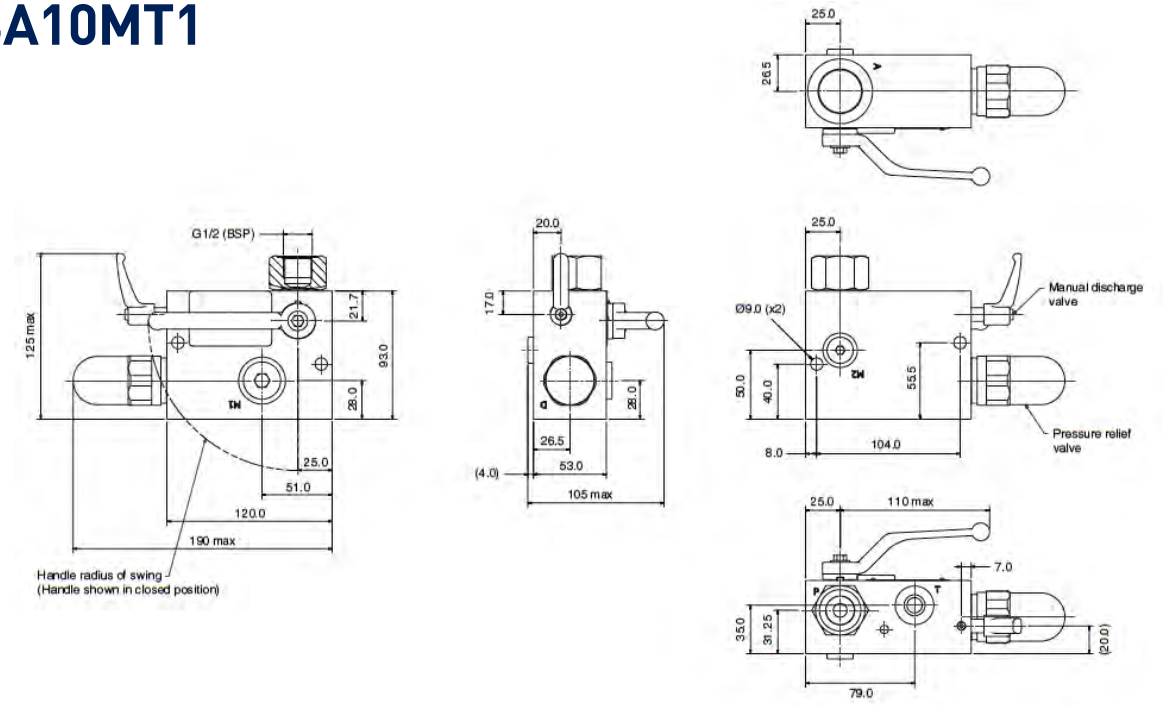

SBA10ET1

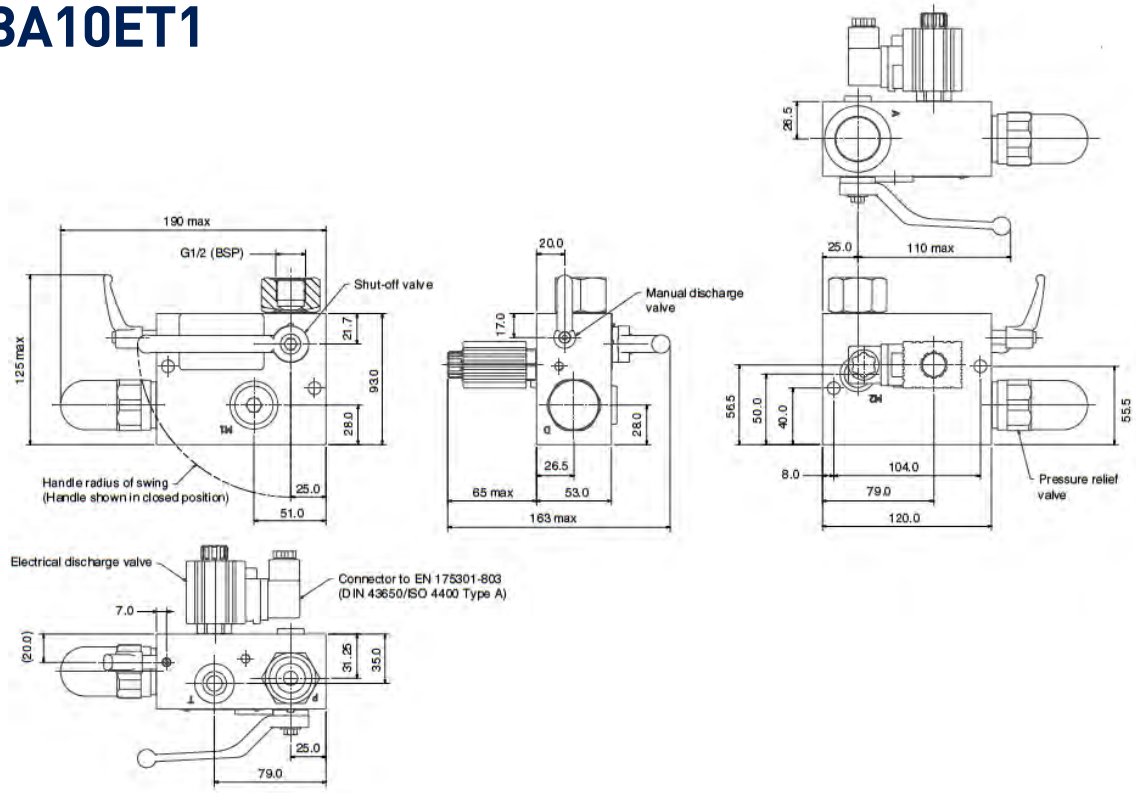

Above dimensions are in mm and are subject to manufacturing tolerances.

SBA20MT1

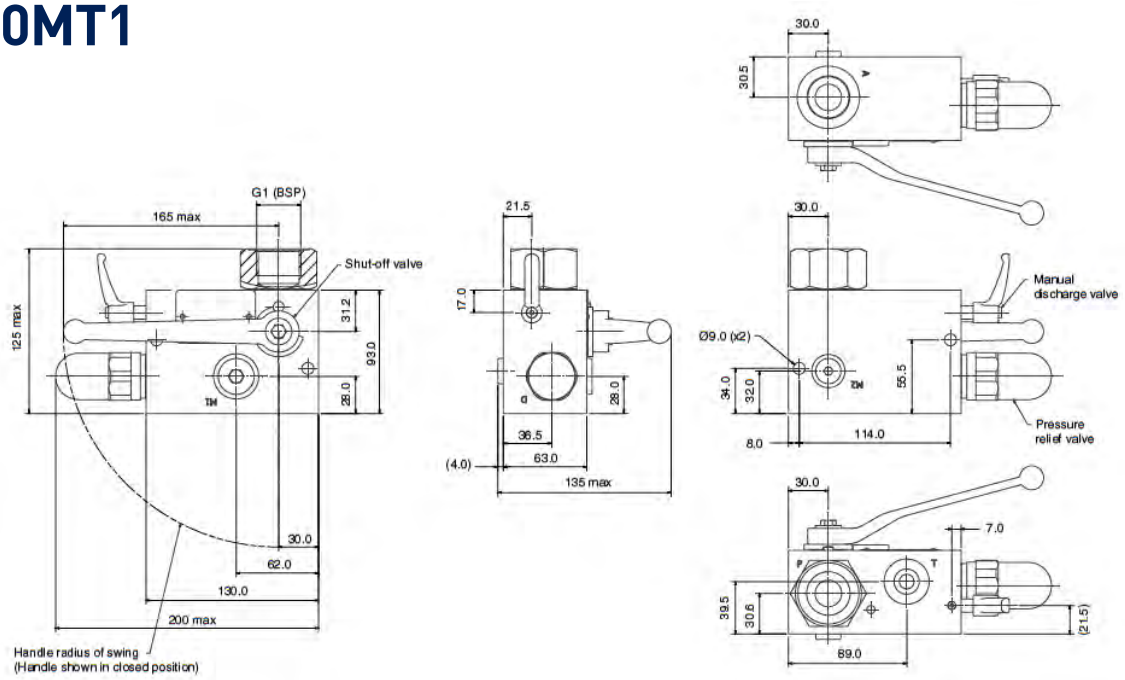

SBA20ET1

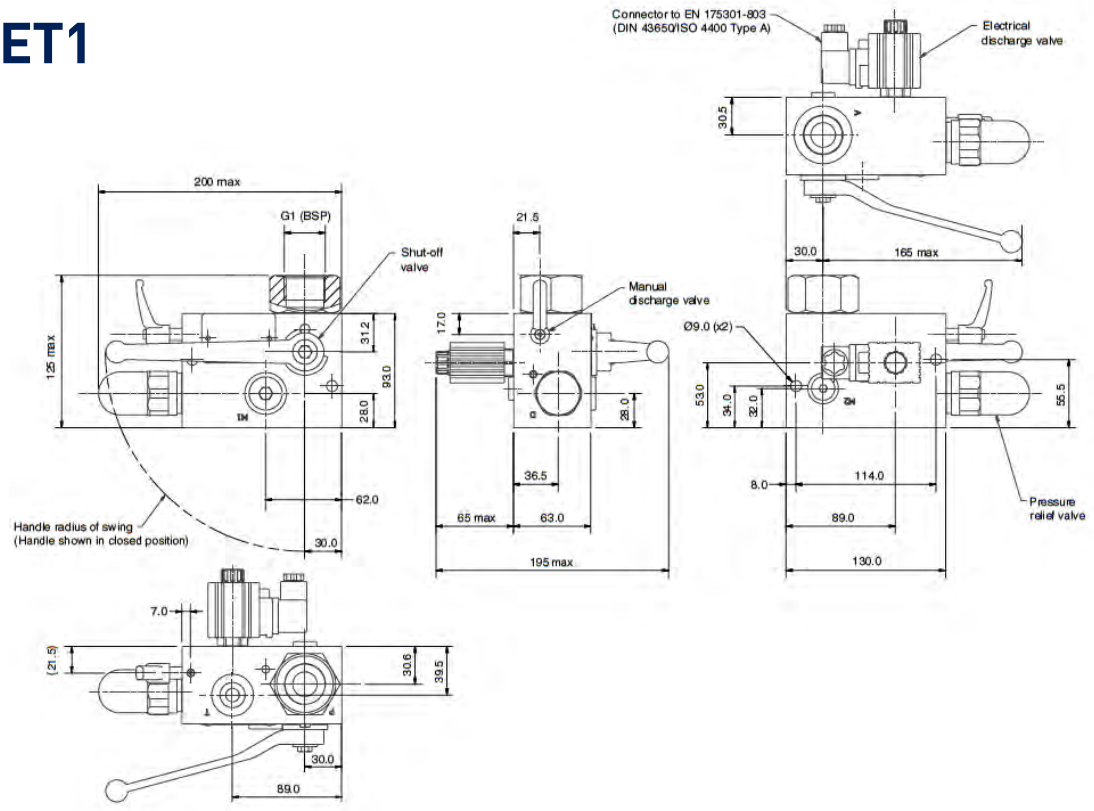

Above dimensions are in mm and are subject to manufacturing tolerances.

SBA32MT1

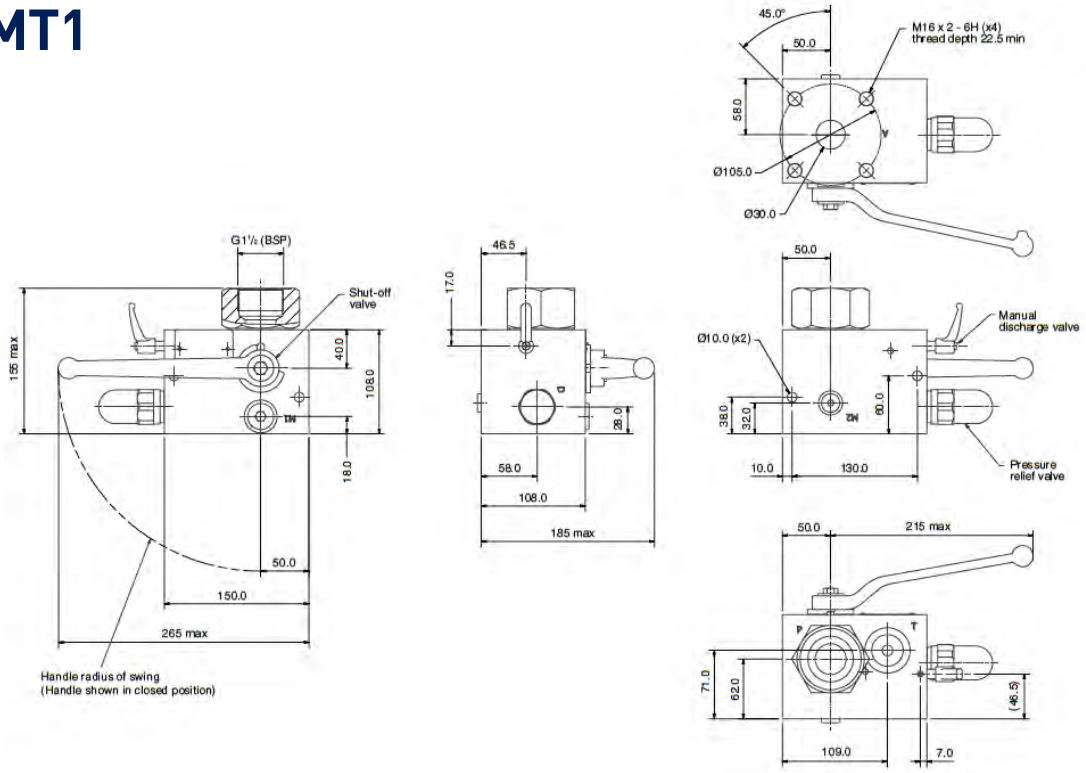

SBA32ET1

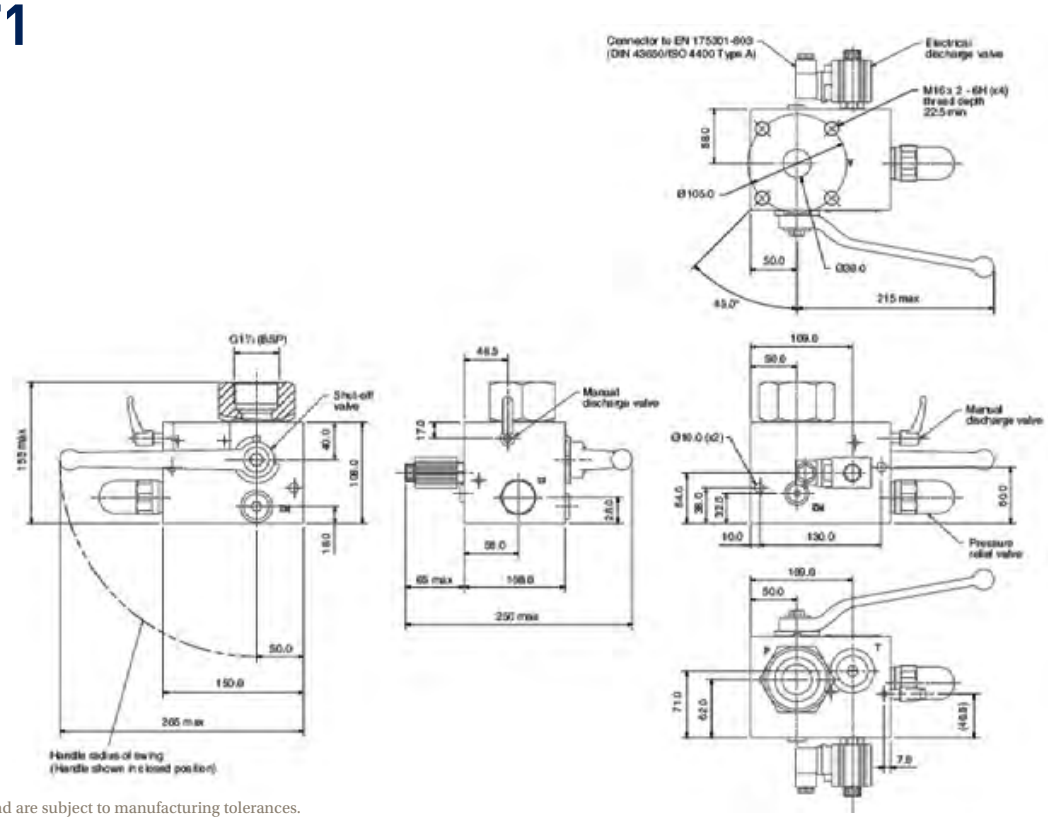

Above dimensions are in mm and are subject to manufacturing tolerances.

Adapters - Accumulator to SBA Safety Block

Accumulator Fluid Port D1		Safety Block Port A	SW	L	L1	D2	D3	Weight (Kg)	Part Number	Use with SBA	For Accumulator Type		
											Bladder	Diaphragm	Piston
G3/4	ISO 228	M33 x2	46	33	16	53	16	04	UEST-T-3/4	10 & 20	x		
G1 1/4	ISO 228	M33 x2	55	41	20	63	20	04	UEST-T-1 1/4	10 & 20	x		
G2	ISO 228	M33 x2	80	46	22	90	20	15	UEST-T-2	10 & 20	x		
G2	ISO 228	Flange 100	-	50	22	-	30	22	UEST-F-2	32	x		
G1/2	ISO 228	M33 x2	46	34	14	53	12	04	UEST-T-1/2ED	10 & 20		x	x
G3/4	ISO 228	M33 x2	46	36	16	53	16	04	UEST-T-3/4ED	10 & 20		x	x
G1 1/2	ISO 228	Flange 100	-	70	22	-	30	23	UEST-F-1 1/2	32			x

Threaded Adapter
UEST-T-xx

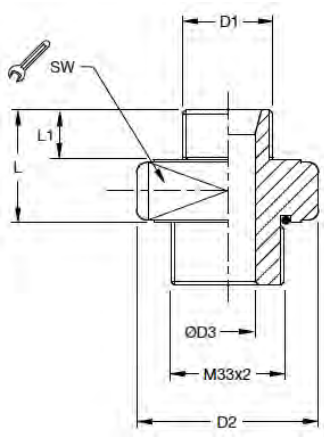

Flanged Adapter
UEST-F-xx

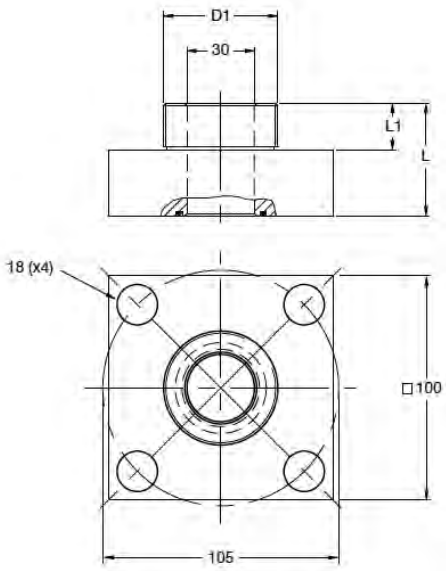

Relief Valve Block SD/SL

Safety unit able to limit the pressure to the rating value of the accumulator using for the pressure test

Type	Connection accumulator side code	H (mm)	A Connection accumulator side	P Pressure line	T Return tank
SL 10	8	57	G 1/2”	G 1/2”	G 3/8”
SL 16	2	56	G 3/4”	G 3/4”	G 3/8”
SL 16	1	67	G1 1/4”	G1 1/4”	G 3/8”
SL 16	4	67	M40 x 1.5	M40 x 1.5	G 3/8”
SL 24	3	70	G2”	G2”	G 3/8”
SL 24	5	70	M50 x 150	M50 x 150	G 3/8”

Above dimensions are in mm and are subject to manufacturing tolerances.

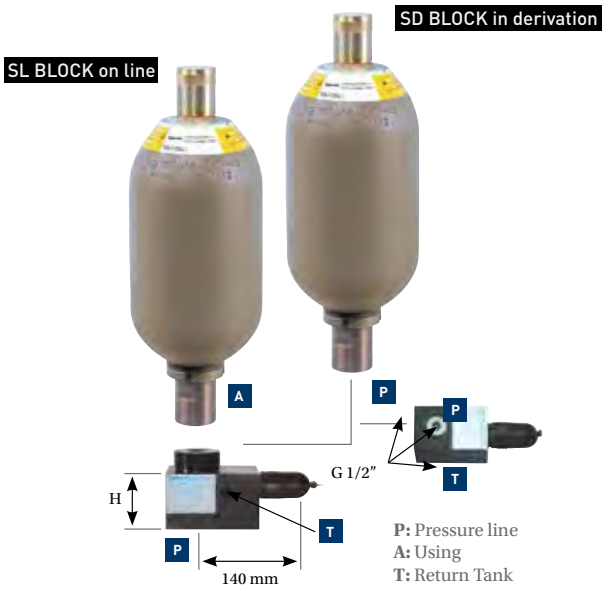

Type SL (assembly in line)

With seals in Viton All Fluids except for Skydrol applications (consult Parker)

Type	Connection accumulator side	Part Number
SL BLOCK on line	**SL 10/8**	3517608XXX2
	SL 16/1	3517091XXX2
	SL 24/3	3517073XXX2

Type SD (assembly in derivation)

SD BLOCK	SD 24/0	3517060XXX2

xxx to be replaced with the relief valve set pressure in bar e.g.35176083502 for relief valve preset to 350 bar

Tel: +45 63 12 83 00 | Email: ps@hymatik.com | www.hymatik.com | Hvidkaervej 27a, DK-5250 Odense SV, Denmark

ECA & ECSA Series Safety Block

TECHNICAL DATA CARBON STEEL SAFETY BLOCK ECA

(345 BAR)

Maximum working pressure: 345 bar
Materials: Carbon steel. All blocks are fully tested.
Seals: Nitrile fitted as standard. Viton and other options also available.

Connections :
- Pressure gauge connection (M port).
- Wide range of adaptors for accumulator connection.
- All G threads (BSP) to BS2779 1986. Performance data available.

Other:
- Pressure relief valve for the protection of accumulator.
- Manual dump to tank valve as standard.
- Optional additional electomagnetic dump to tank valve.

Manual version

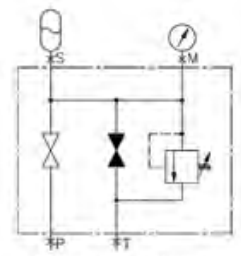

Circuit Flow Diagram

TECHNICAL DATA STAINLESS STEEL SAFETY BLOCK ECSA

(345 BAR & 690 BAR)

Materials: 316 Stainless steel. All blocks are fully tested.
Seals: Nitrile fitted as standard. Viton and other options also available.
Connections :
- Pressure gauge connection (M port).
- Wide range of adaptors for accumulator connection.
- All G threads (BSP) to BS2779 1986.
- For 760 bar only - All NPT to ANSI/ASME B.1.20.1 1983
- Performance data available.

Other:
- Pressure relief valve for the protection of accumulator.
- Manual dump to tank valve as standard.

Electrical version

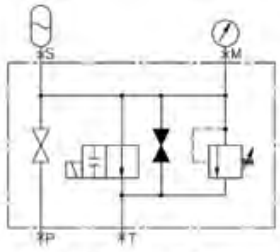

Circuit Flow Diagram

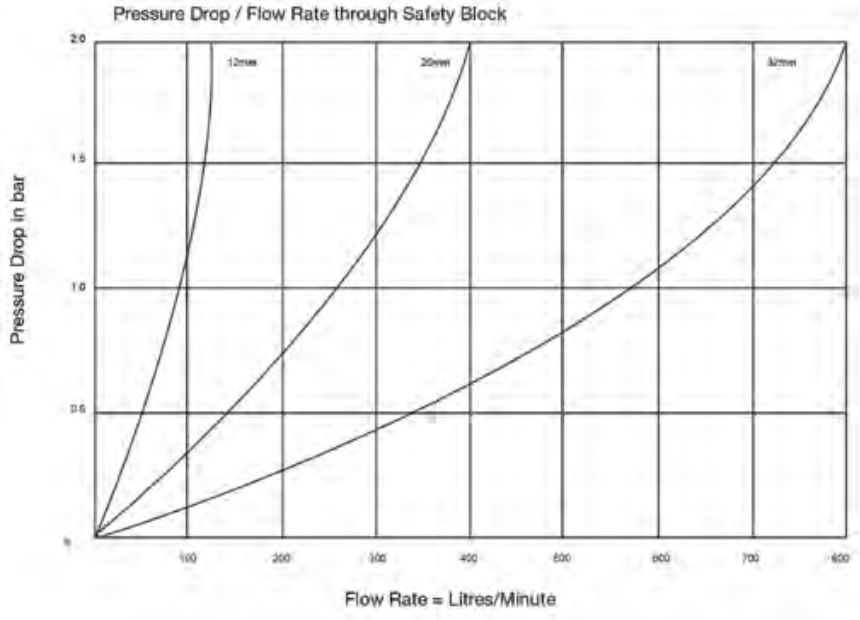

Tel: +45 63 12 83 00 | Email: ps@hymatik.com | www.hymatik.com | Hvidkaervej 27a, DK-5250 Odense SV, Denmark

EC(S)A Series: How to order an ECA or ECSA Safety Block

ECA12 01 L N 2 XXX

Type

ECA	Carbon Steel
ECSA	Stainless Steel

Size

12 / 20 / 32

Dump to tank valve (type)

Code:

01	Mechanical
02	Mechanical & Electrical (carbon steel only)

Seal Material

Code:	Seal Material:
L	Nitrile
V	Flurocarbon

Special Requirement

Code:	Special Requirements:
N	None
A	110v AC*
B	220v AC*
G	24v DC* *Not available for stainless steel

Port Interface (690 bar only)

Code:	Port Interface**:
2	BSP
3	NPT **Only available for 690 bar, stainless steel

Relief valve setup (Bar)

Indicate pressure in Bar

ECA, Carbon Steel, 345 Bar

Part Number	Port Sizes				Dimensions (mm - for standard (01) Safety Block)			
	S port Accumulator	P port process	T port tank	M port Gauge	A	B	C	D Handle Length
ECA12-01-L-N	G 1/2"	G 1/2"	G 1/4"	G 1/4"	76	93	60	115
ECA20-01-L-N	G 3/4"	G 3/4"	G 3/8"	G 1/4"	90	108	70	160
ECA32-01-L-N	G1 1/4"	G1 1/4"	G 3/8"	G 1/4"	90	131	90	300

ECSA, Stainless Steel, 345 Bar

Part Number	Port Sizes				Dimensions (mm - for standard (01) Safety Block)			
	S port Accumulator	P port process	T port tank	M port Gauge	A	B	C	D Handle Length
ECSA12-01-L-N	G 1/2"	G 1/2"	G 1/4"	G 1/4"	65	94	76	115
ECSA20-01-L-N	G 3/4"	G 3/4"	G 3/8"	G 1/4"	70	108	90	160
ECSA32-01-L-N	G1 1/4"	G1 1/4"	G 3/8"	G 1/4"	90	131	105	300

ECSA, Stainless Steel, 690 Bar

Part Number	Port Sizes				Dimensions (mm - for standard (01) Safety Block)			
	S port Accumulator	P port process	T port tank	M port Gauge	A	B	C	D Handle Length
ECSA12-01-L-N-2	G 1/2"	G 1/2"	G 1/4"	G 1/4"	70	94	85	115
ECSA12-01-L-N-3	1/2" NPT	1/2" NPT	1/4" NPT	1/4" NPT	70	94	85	115

- All NPT to ANSI/ASME B.1.20.1. 1983
- All G threads (BSP) to BS2779 1986

ECA

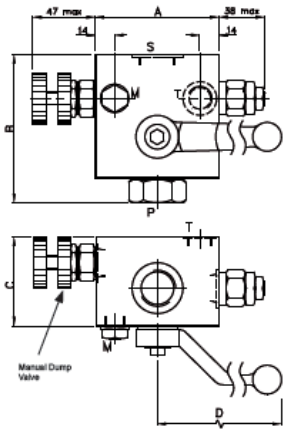

ECSA

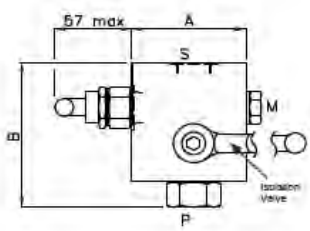

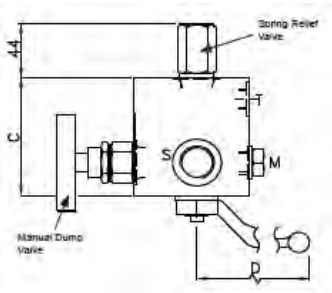

SAFETY BLOCK ECA&ECSA/ACCUMULATORS

For complete unit, please order safety block + Accumulator adaptor + Accumulator seal + Adaptor seal (see table below)

Construction	Accumulator fluid port sealing system	Fluid port dimension	Block P/N	Safety Block Port	Accumulator adaptor	Accumulator seal	Adaptor seal
Carbon Steel	O'ring	3/4 BSP	ECA12-01-L-N	1/2"BSPF	Consult Parker	40893-A00	40503-A97
	O'ring	1-1/4 BSP	ECA12-01-L-N	1/2"BSPF	55410-V10	40488-A00	40503-A97
	O'ring	2 BSP	ECA12-01-L-N	1/2"BSPF	54442-V10	40451-A00	40503-A97
	O'ring	1-1/4 BSP	ECA20-01-L-N	3/4"BSPF	54667-V10	40488-A00	40505-A97
	O'ring	2 BSP	ECA20-01-L-N	3/4"BSPF	54411-V10	40451-A00	40505-A97
	O'ring	1-1/4 BSP	ECA32-01-L-N	1.1/4"BSPF	Consult Parker	40488-A00	40508-A97
	O'ring	2 BSP	ECA32-01-L-N	1.1/4"BSPF	Consult Parker	40451-A00	40508-A97
	Bonded seal	1/2 BSPF	ECA12-01-L-N	1/2"BSPF	54605-V10	40503-A97	40503-A97
	Bonded seal	3/4 BSPF	ECA12-01-L-N	1/2"BSPF	50716-V10	40505-A97	40503-A97
	Bonded seal	1 BSPF	ECA12-01-L-N	1/2"BSPF	50715-V10	40507-A97	40503-A97
	Bonded seal	1-1/4 BSPF	ECA12-01-L-N	1/2"BSPF	50713-V10	40508-A97	40503-A97
	Bonded seal	2 BSPF	ECA12-01-L-N	1/2"BSPF	50454-V10	40511-A97	40503-A97
	Bonded seal	3/4 BSPF	ECA20-01-L-N	3/4"BSPF	50053-V10	40505-A97	40505-A97
	Bonded seal	1 BSPF	ECA20-01-L-N	3/4"BSPF	50714-V10	40507-A97	40505-A97
	Bonded seal	1-1/4 BSPF	ECA20-01-L-N	3/4"BSPF	50712-V10	40508-A97	40505-A97
	Bonded seal	2 BSPF	ECA20-01-L-N	3/4"BSPF	50711-V10	40511-A97	40505-A97
	Bonded seal	1 BSPF	ECA32-01-L-N	1.1/4"BSPF	50304-V10	40507-A97	40508-A97
	Bonded seal	1-1/4 BSPF	ECA32-01-L-N	1.1/4"BSPF	50055-V10	40508-A97	40508-A97
	Bonded seal	2 BSPF	ECA32-01-L-N	1.1/4"BSPF	52012-V10	40511-A97	40508-A97
Stainless steel	O'ring	3/4 BSP	ECSA12-01-L-N	1/2"BSPF	Consult Parker	40893-A00	40503-A98
	O'ring	1-1/4 BSP	ECSA12-01-L-N	1/2"BSPF	55410-006	40488-A00	40503-A98
	O'ring	2 BSP	ECSA12-01-L-N	1/2"BSPF	54442-006	40451-A00	40503-A98
	O'ring	1-1/4 BSP	ECSA20-01-L-N	3/4"BSPF	54667-006	40488-A00	40505-A98
	O'ring	2 BSP	ECSA20-01-L-N	3/4"BSPF	54411-006	40451-A00	40505-A98
	O'ring	1-1/4 BSP	ECSA32-01-L-N	1.1/4"BSPF	Consult Parker	40488-A00	40508-A98
	O'ring	2 BSP	ECSA32-01-L-N	1.1/4"BSPF	Consult Parker	40451-A00	40508-A98
	Bonded seal	1/2 BSPF	ECSA12-01-L-N	1/2"BSPF	54605-006	40503-A98	40503-A98
	Bonded seal	3/4 BSPF	ECSA12-01-L-N	1/2"BSPF	50716-006	40505-A98	40503-A98
	Bonded seal	1 BSPF	ECSA12-01-L-N	1/2"BSPF	50715-006	40507-A98	40503-A98
	Bonded seal	1-1/4 BSPF	ECSA12-01-L-N	1/2"BSPF	50713-006	40508-A98	40503-A98
	Bonded seal	2 BSPF	ECSA12-01-L-N	1/2"BSPF	50454-006	40511-A98	40503-A98
	Bonded seal	3/4 BSPF	ECSA20-01-L-N	3/4"BSPF	50053-006	40505-A98	40505-A98
	Bonded seal	1 BSPF	ECSA20-01-L-N	3/4"BSPF	50714-006	40507-A98	40505-A98
	Bonded seal	1-1/4 BSPF	ECSA20-01-L-N	3/4"BSPF	50712-006	40508-A98	40505-A98
	Bonded seal	2 BSPF	ECSA20-01-L-N	3/4"BSPF	50711-006	40511-A98	40505-A98
	Bonded seal	1 BSPF	ECSA32-01-L-N	1.1/4"BSPF	50304-006	40507-A98	40508-A98
	Bonded seal	1-1/4 BSPF	ECSA32-01-L-N	1.1/4"BSPF	50055-006	40508-A98	40508-A98
	Bonded seal	2 BSPF	ECSA32-01-L-N	1.1/4"BSPF	52012-006	40511-A98	40508-A98
Stainless steel	O' ring	1" BSP (special)	ECSA12-01-L-N-2	1/2"BSPF	Consult Parker	101006-00033 + 40857-P00	40503-A98
	O' ring	2" BSP (special)	ECSA12-01-L-N-2	1/2"BSPF	55682-005	40455-A00 + 40456-P00	40503-A98
	O' ring	1" BSP (special)	ECSA12-01-L-N-3	1/2"NPTF	54579-005	101006-00033 + 40857-P00	N/a
	O' ring	2" BSP (special)	ECSA12-01-L-N-3	1/2"NPTF	55687-005	40455-A00 + 40456-P00	N/a

Tel: +45 63 12 83 00 | Email: ps@hymatik.com | www.hymatik.com | Hvidkaervej 27a, DK-5250 Odense SV, Denmark

Burst Disc Kit

Up to 650 BAR
- CE Marked according to PED 2014/68/EU



Parker burst discs are available for the EHV range of accumulators, designed adaptor, available in carbon steel or stainless steel.

Burst discs are a safety device which release the gas pressure independent of the pressure being caused by a fire or a failure of other safety equipment in the system.

This is a secondary safety device and it should be set higher than the normal hydraulic safety devices in the system.

Complete kit of burst disc (1) includes adaptor and label (2), o-ring (3), burst disc (4)

For installation, please consult user manual delivered with declaration of manufacturing of conformity (3.1 certificate)

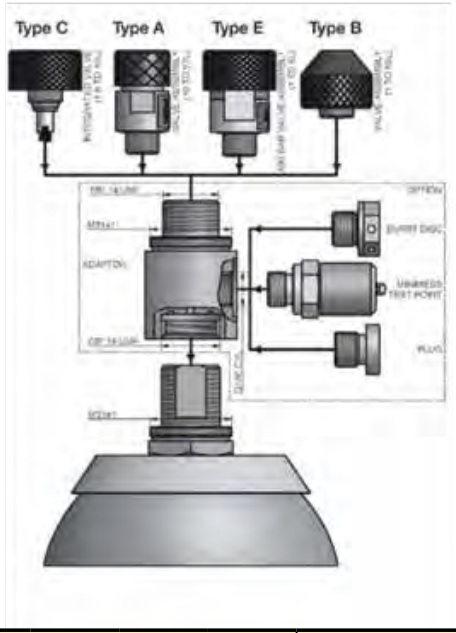

Type	Carbon Steel	Stainless Steel
	Part Number	Part Number
Adaptor M-F7/8”14UNF-FG1/4”	11148500200	11148501700

Type	Carbon Steel Kit	Stainless Steel Kit	Burst Pressure in bar at temperature					P/N Stainless Steel Burst Disc (only)
	Part Number	Part Number	80°C	40°C*	20°C*	0°C*	- 20°C*	
Burst Disc Kit G¼ 230 B	11172700223	11172701723	230	240	247	254	264	11171700000
Burst Disc Kit G¼ 250 B	11172800223	11172801723	250	261	269	277	288	11171800000
Burst Disc Kit G¼ 275 B	11172900223	11172901723	275	287	296	305	317	11171900000
Burst Disc Kit G¼ 290 B	11173000223	11173001723	290	303	312	321	334	11172000000
Burst Disc Kit G¼ 300 B	11173100223	11173101723	300	313	323	333	346	11172100000
Burst Disc Kit G¼ 360 B	11173200223	11173201723	360	375	387	399	414	11172200000
Burst Disc Kit G¼ 385 B	11173300223	11173301723	385	402	414	426	443	11172300000
Burst Disc Kit G¼ 420 B	11173400223	11173401723	420	438	452	466	484	11172400000
Burst Disc Kit G¼ 480 B	11173500223	11173501723	480	501	516	531	552	11172500000
Burst Disc Kit G¼ 650 B	11173600223	11173601723	650	678	699	720	748	11172600000

* Temp ranges are shown as indicative tolerances only. Actual performance would require testing to confirm

Permanent charging block

A permanent charging block directly mounted on the bladder accumulator steam valve is a helpful device to continuously monitor nitrogen pressure (P0).

Note : to check actual nitrogen value (P0) accumulator must be depressurized on oil side

It includes :

- Adapter
- Pressure gauge
- O-ring
- Gas Valve

Part Number (carbon steel adaptor) :

Part Number (carbon steel adaptor)	Designation
11153700223	Permanent Charging Block 0 – 60 B
11153900223	Permanent Charging Block 0 – 250 B
11154000223	Permanent Charging Block 0 – 350 B

Also available in stainless steel: on request





Remote permanent charging block

Remote charging equipment is an helpful device to check nitrogen pressure (P0) when gas valve access tricky. It consists on adaptor directly connected to accumulator steam valve and a block linked equipped with pressure gauge and gas valve .

Pipe between adaptor and block not include.

Note : to check actual nitrogen value (P0) accumulator must be depressurized on oil side

Monitoring block equipped with 2 fastening threaded holes on each two faces (M6x 100 ; depth 15 mm)

It includes :

- adaptor (4) for 7/8 " UNF steam valve
- remote block (1) including :
  - . gas valve (2)
  - . pressure gauge (3)

Type	Part Number Zinc Plated Steel	Part Number stainless steel
25B Monitoring Charging Set	11269700223	11269701723
60B Monitoring Charging Set	11269800223	11269801723
250B Monitoring Charging Set	11269900223	11269901723
400B Monitoring Charging Set	11270000223	11270001723
600B Monitoring Charging Set	11270100223	11270101723

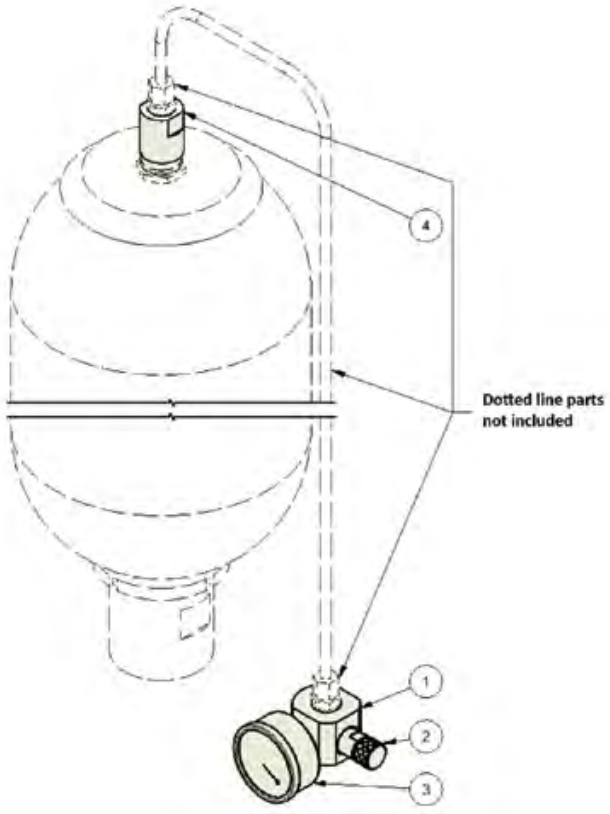





aerospace
climate control
electromechanical
filtration
fluid & gas handling
hydraulics
pneumatics
process control
sealing & shielding





Gas Bottles

up to 350 bar



Parker OLAER

ENGINEERING YOUR SUCCESS.

BA EHP Series Tube & Cap type
Series 250 bar, 25 to 200 Litres, Ø 250

Standard Version (**Carbon Steel** shell/seals for mineral oils) temperature from - 20° up to 80°C.
According to PED 2014/68/EU

Type	Part number	Effective Gas vol. Litres	Max. Working pressure bar	Max Weight kg	Dimensions in mm					Seal Kit
					A Max. Length	C	øD max	ød	øG connection	
BA EHP C 0250-250-250	815EHPOC0252525	25	250	260	891	45	298.50	250	G 2"	8220000000003
BA EHP C 0300-250-250	815EHPOC0302525	30	250	275	992	45	298.50	250	G 2"	8220000000003
BA EHP C 0400-250-250	815EHPOC0402525	40	250	310	1196	45	298.50	250	G 2"	8220000000003
BA EHP C 0500-250-250	815EHPOC0502525	50	250	345	1401	45	298.50	250	G 2"	8220000000003
BA EHP C 0600-250-250	815EHPOC0602525	60	250	375	1606	45	298.50	250	G 2"	8220000000003
BA EHP C 0700-250-250	815EHPOC0702525	70	250	410	1811	45	298.50	250	G 2"	8220000000003
BA EHP C 0800-250-250	815EHPOC0802525	80	250	445	2011	45	298.50	250	G 2"	8220000000003
BA EHP C 0900-250-250	815EHPOC0902525	90	250	475	2216	45	298.50	250	G 2"	8220000000003
BA EHP C 1000-250-250	815EHPOC1002525	100	250	510	2421	45	298.50	250	G 2"	8220000000003
BA EHP C 2000-250-250	815EHPOC2002525	200	250	660	4458	45	298.50	250	G 2"	8220000000003

Available in ASME VIII Division I, U STAMPED, in that case BA EHP C ---> BA IHP C



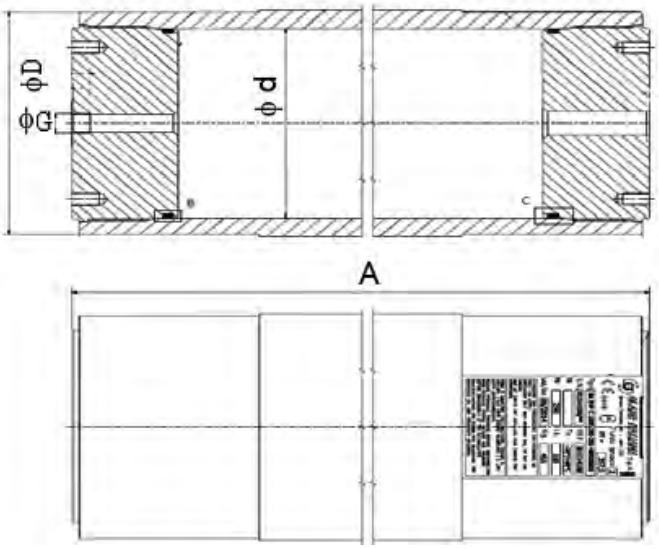

BA EHP Series Tube &Cap type

Series 250 bar, 25 to 500 Litres, Ø 350

Standard Version (Carbon Steel shell/seals for mineral oils) temperature from - 15° up to 100°C.

According to PED 2014/68/EU

Type	Part number	Effective Gas vol. Litres	Max. Working pressure bar	Max Weight kg	Dimensions in mm					
					A Max. Length	C	øD max	ød	øG connection	Seal Kit
BA EHP C 0300-250-350	815EHPOC0302535	30	250	445	818	45	406.4	350	G 2"	8220000000003
BA EHP C 0300-250-350	815EHPOC0402535	40	250	472	922	45	406.4	350	G 2"	8220000000003
BA EHP C 0500-250-350	815EHPOC0502535	50	250	500	1026	45	406.4	350	G 2"	8220000000003
BA EHP C 0500-250-350	815EHPOC1002535	100	250	637	1546	45	406.4	350	G 2"	8220000000003
BA EHP C 1000-250-350	815EHPOC1502535	150	250	772	2066	45	406.4	350	G 2"	8220000000003
BA EHP C 2000-250-350	815EHPOC2002535	200	250	912	2586	45	406.4	350	G 2"	8220000000003
BA EHP C 2500-250-350	815EHPOC2502535	250	250	1048	3106	45	406.4	350	G 2"	8220000000003
BA EHP C 3000-250-350	815EHPOC3002535	300	250	1185	3626	45	406.4	350	G 2"	8220000000003
BA EHP C 3500-250-350	815EHPOC3502535	350	250	1322	4146	45	406.4	350	G 2"	8220000000003
BA EHP C 4000-250-350	815EHPOC4002535	400	250	1429	4664	45	406.4	350	G 2"	8220000000003
BA EHP C 4500-250-350	815EHPOC4502535	450	250	1565	5183	45	406.4	350	G 2"	8220000000003
BA EHP C 5000-250-350	815EHPOC5002535	500	250	1702	5703	45	406.4	350	G 2"	8220000000003

Available in ASME VIII Division I, U STAMPED, in that case BA EHP C ---> BA IHP C



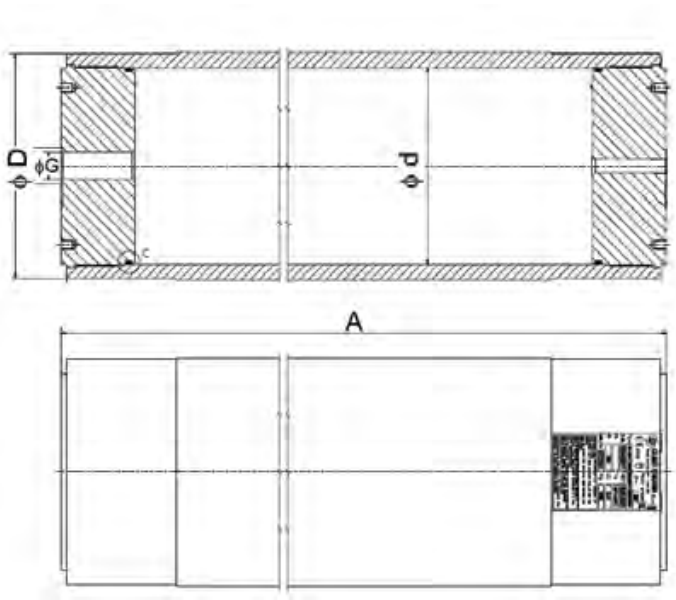

BA EHP Series 250 bar, 125 to 1000 Litres, Ø 540

Standard Version (Carbon Steel shell) temperature from - 15° up to 100°C According to PED 2014/68/EU

Product Prices & Dimensions

Type	Part number	Effective Gas vol. Litres	Design P bar	Weight kg	Dimensions en mm			Std Fluid opening	Seal Kit
					L	øD	ød		
BA EHP C 1250-250-540	815BAEHPOC1252554	125	250	1546	1530	650	540	G 3”	8220000000018
BA EHP C 2500-250-540	815BAEHPOC2502554	250	250	2070	2001	650	540	G 3”	8220000000018
BA EHP C 3000-250-540	815BAEHPOC3002554	300	250	2546	2696	650	540	G 3”	8220000000018
BA EHP C 4000-250-540	815BAEHPOC4002554	400	250	3000	3154	650	540	G 3”	8220000000018
BA EHP C 5000-250-540	815BAEHPOC5002554	500	250	3322	3472	650	540	G 3”	8220000000018
BA EHP C 6000-250-540	815BAEHPOC6002554	600	250	3711	3861	650	540	G 3”	8220000000018
BA EHP C 7000-250-540	815BAEHPOC7002554	700	250	4099	4249	650	540	G 3”	8220000000018
BA EHP C 8000-250-540	815BAEHPOC8002554	800	250	4487	4637	650	540	G 3”	8220000000018
BA EHP C 9000-250-540	815BAEHPOC9002554	900	250	4875	5025	650	540	G 3”	8220000000018
BA EHP C 10000-250-540	815BAEHPOC10002554	1000	250	5263	5413	650	540	G 3”	8220000000018

Available in ASME VIII Division I, U STAMPED, in that case BA EHP C ---> BA IHP C

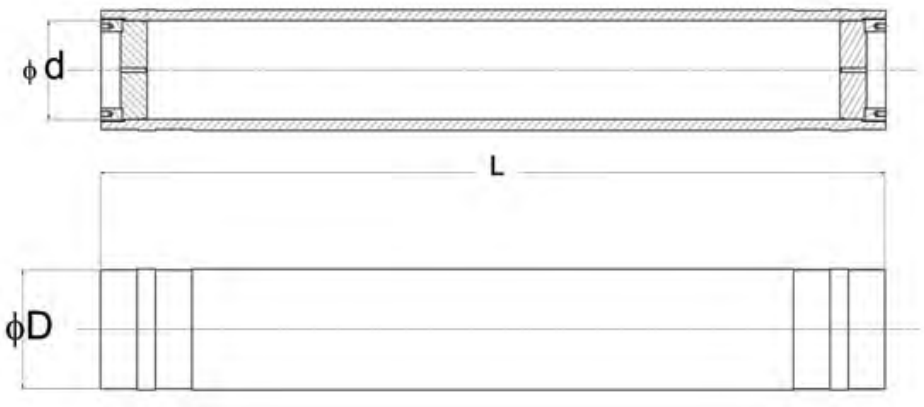

BA EHP Series 350 bar, 125 to 1000 Litres, Ø 540

Standard Version (Carbon Steel shell) temperature from - 15° up to 100°C According to PED 2014/68/EU

Product Prices & Dimensions

Type	Part number	Effective Gas vol. Litres	Design P bar	Weight kg	Dimensions in mm			Std Fluid opening	Seal Kit
					L	øD	ød		
BA EHP C 1250-350-540	815BAEHPOC1253554	125	350	1663	1730	730	540	G 3”	8220000000018
BA EHP C 2500-350-540	815BAEHPOC2503554	250	350	2265	2201	730	540	G 3”	8220000000018
BA EHP C 3000-350-540	815BAEHPOC3003554	300	350	2813	2896	730	540	G 3”	8220000000018
BA EHP C 4000-350-540	815BAEHPOC4003554	400	350	3335	3354	730	540	G 3”	8220000000018
BA EHP C 5000-350-540	815BAEHPOC5003554	500	350	3705	3672	730	540	G 3”	8220000000018
BA EHP C 6000-350-540	815BAEHPOC6003554	600	350	4153	4061	730	540	G 3”	8220000000018
BA EHP C 7000-350-540	815BAEHPOC7003554	700	350	4599	4449	730	540	G 3”	8220000000018
BA EHP C 8000-350-540	815BAEHPOC8003554	800	350	5045	4837	730	540	G 3”	8220000000018
BA EHP C 9000-350-540	815BAEHPOC9003554	900	350	5491	5225	730	540	G 3”	8220000000018
BA EHP C 10000-350-540	815BAEHPOC10003554	1000	350	5937	5613	730	540	G 3”	8220000000018

Available in ASME VIII Division I, U STAMPED, in that case BA EHP C ---> BA IHP C

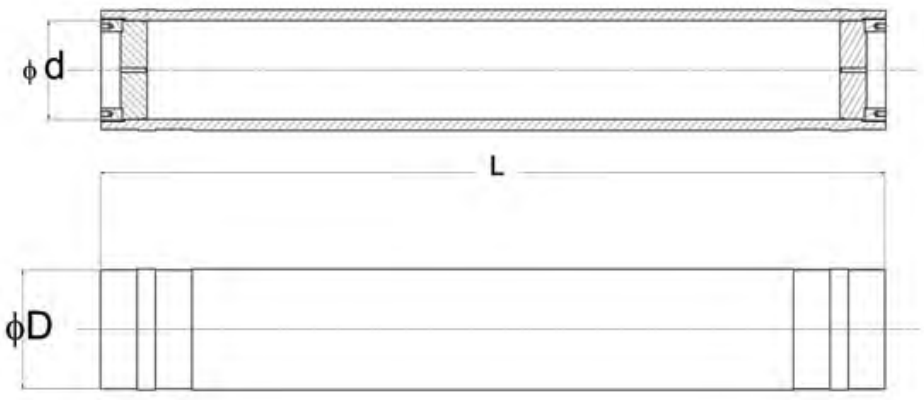

BA EHB Series, 10 to 57 Litres, 330 bar

Standard Version (Carbon Steel shell) for mineral oils. According to PED 2014/68/EU, EN14359 Fluid Group 2
Products, Part numbers, Accessories, Dimensions

Type	Part number	Complete Repair Kit Model Part number	Effective Gas volume Litres	Max. Working pressure (PS) bar	Temp. Range[1] min/max (°C)	Max Weight kg	Top connection	Dimensions in mm						
								A max Length	B	C	øD max	øE	F on flats	øG connec-tion
EHB 10-330/90	10949501125	KIT EHB 10 TO 57-330 D22 19060400225	9.2	330	-40/+80	29	1/2" 20 UNF	554	103	40	226	101	70	G 2"
EHB 12-330/90	10993401125	KIT EHB 10 TO 57-330 D22 19060400225	11	330	-40/+80	34	1/2" 20 UNF	654	103	40	226	101	70	G 2"
EHB 20-330/90	10933901125	KIT EHB 10 TO 57-330 D22 19060400225	17.8	330	-40/+80	46	1/2" 20 UNF	864	103	40	226	101	70	G 2"
EHB 24.5-330/90	10943501125	KIT EHB 10 TO 57-330 D22 19060400225	22.5	330	-40/+80	53	1/2" 20 UNF	999	103	40	226	101	70	G 2"
EHB 32-330/90	10935901125	KIT EHB 10 TO 57-330 D22 19060400225	32	330	-40/+80	76	1/2" 20 UNF	1387	103	40	226	101	70	G 2"
EHB 42-330/90	11181801125	KIT EHB 10 TO 57-330 D22 19060400225	42	330	-40/+80	82	1/2" 20 UNF	1529	103	40	226	101	70	G 2"
EHB 50-330/90	11137501125	KIT EHB 10 TO 57-330 D22 19060400225	48.5	330	-40/+80	105	1/2" 20 UNF	1903	103	40	226	101	70	G 2"
EHB 57-330/90	11181901125	KIT EHB 10 TO 57-330 D22 19060400225	51	330	-40/+80	110	1/2" 20 UNF	1999	103	40	226	101	70	G 2"



BA EHB Series, 1.6 to 10 Litres, 350 bar

Standard Version (Carbon Steel shell) for mineral oils. According to PED 2014/68/EU,
Product , Part numbers, Accessories, Dimensions

Type	Part number	Complete Repair Kit Model Part number	Effective Gas volume Litres	Max. Working pressure (PS) bar	Temp. Range[1] min/max (°C)	Max Weight kg	Top connection	Dimensions in mm						
								A max Length	B	C	øD max	øE	F on flats	øG connection
EHB 1.6-350/90	11106501125	KIT EHB 1.6-350/90 19067801125	1.60	350	-40/+80	7	1/2" 20 UNF	414	54	40	116	50	32	G 3/4"
EHB 2.5-350/90	10940901125	KIT EHB 2.5-350/90 19067901125	2.4	350	-40/+80	10	1/2" 20 UNF	521	66	40	116	68	50	G 1 1/4"
EHB 5-350/90	10941001147	KIT EHB 5-350/90 19067901125	5	350	-40/+80	16	1/2" 20 UNF	870	66	40	116	68	50	G 1 1/4"
EHB 4-350/90	10987101125	KIT EHB 4-350/90 19068001125	3.7	350	-40/+80	14	1/2" 20 UNF	406	65	40	170	68	50	G 1 1/4"
EHB 6-350/90	10954101125	KIT EHB 6-350/90 19068001125	6	350	-40/+80	19	1/2" 20 UNF	532	65	40	170	68	50	G 1 1/4"
EHB 10-350/90	10936001125	KIT EHB 10-350/90 19068001125	10	350	-40/+80	29	1/2" 20 UNF	797	65	40	170	68	50	G 1 1/4"

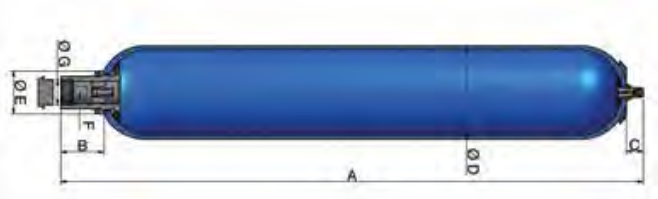

BA series, Forged Shell Type

150 to 500 Litres, 267 bar

Forged carbon steel shell temperature from - 40° up to 80°C

According to PED 2014/68/EU , ASME CODE SEC VIII DIV.1,SELO,CUTR

Type Part number	**Regulation**	**Effective Gas volume** Litres	**Max. Working pressure (PS)** bar	**Max. Working pressure (PS) psi** APP 22	**A Maxi Length** mm	**øD max** mm	**Bottom connection**	**Top connection**
BA150-267 0957035CAS3710665OA	CE ASME SELO CUTR	150	267	3872	2050	356	G 3/4"	G1"1/2
BA320-267 0957035CAS3610665OB	CE ASME SELO CUTR	320	267	3872	3200	406	G 3/4"	G1"1/2
BA500-267 0957035CAS3610665OC	CE ASME SELO CUTR	500	267	3872	4850	406	G 3/4"	G1"1/2

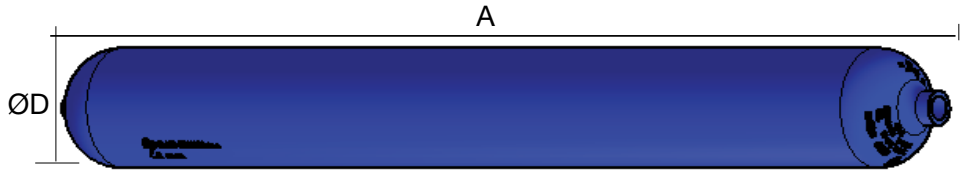

BA series, Forged Shell Type
50 to 100 Litres, 350 bar & 3050 PSI (APP22)

Forged Carbon Steel shell temperature from -40° up to 80°C.
According to PED 2014/68/EU, ASME CODE SEC VIII DIV.1,SELO

Type Part number	**Regulation**	**Effective Gas vol.** Litres	**Max. Working pressure (PS)** bar	**Max. Working Pressure (PS) psi APP22**	**Max Weight** kg	**A Maxi Length** mm	**øD max** mm	**Bottom connection**	**Top connection**
BA50-360/94 0957036ASMECE1100OIT	CE ASME	496	360	4000	94	1800	222	G 3/4”	G1” 1/2
BA 50-350/86 0957035CAS35302653	CE ASME SELO	507	350	3000	100	1800	221	G 3/4”	G1” 1/2
BA 75-350/86 0957035CAS35302654	CE ASME SELO	732	350	3000	134	1720	275	G 3/4”	G1” 1/2
BA 100-350/86 0957035CAS35302652	CE ASME SELO	979	350	3000	180	1420	360	G 3/4”	G1” 1/2

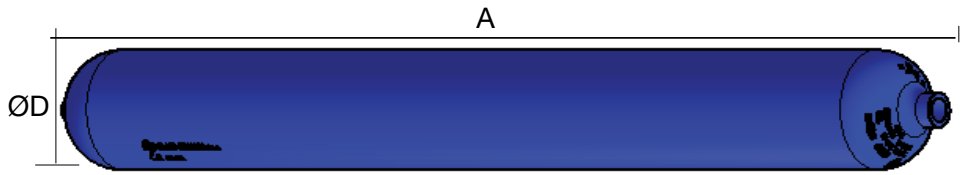

BAWN series, Forged Shell Type
50 & 75 Litres, 360 bar

Forged carbon steel shell temperature from - 40° up to 80°C

According to PED 2014/68/EU , ASME CODE SEC VIII DIV.1 App. 22

Part number	Type	**Effective Gas vol.** Litres	**Max. Working pressure (PS)** bar	**Max. Working Pressure (PS) psi APP22**	**A Maxi Length** mm (+/-25)	**øD max** mm	**Bottom connection**	**Top connection**
83101030	BAWN 50-360	50	360	3000	1615	229	G 3/4"	G1"1/2
83101040	BAWN 75-360	75	360	3000	2280	229	G 3/4"	G1"1/2

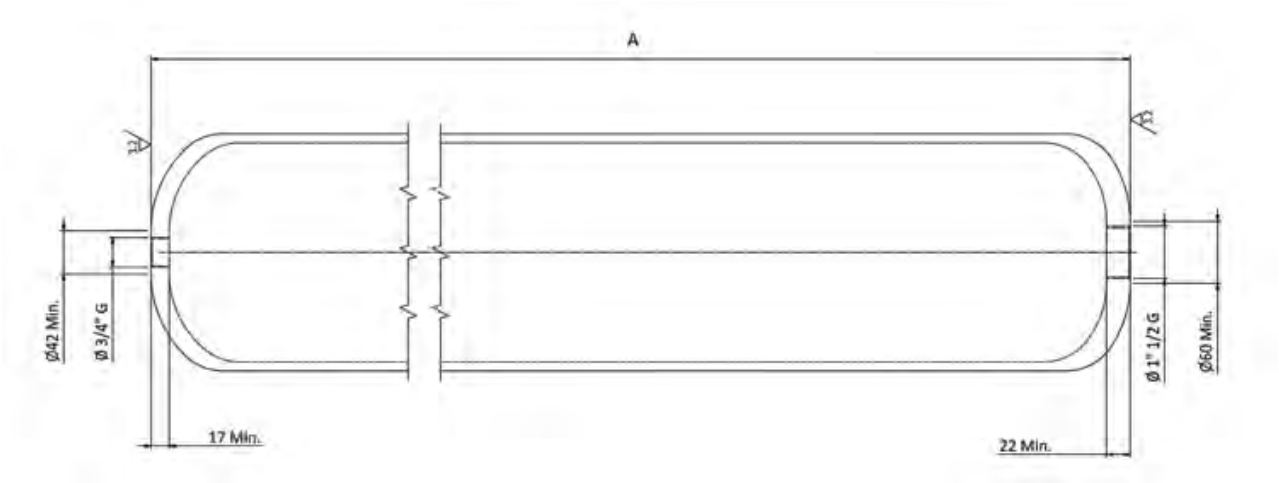

hymatik





aerospace
climate control
electromechanical
filtration
fluid & gas handling
hydraulics
pneumatics
process control
sealing & shielding





Accumulator Systems

Gas Bottles and Accumulators



Parker HANNIFIN

OLAER

ENGINEERING YOUR SUCCESS.

Tel: +45 63 12 83 00 | Email: ps@hymatik.com | www.hymatik.com | Hvidkaervej 27a, DK-5250 Odense SV, Denmark

Accumulator Systems - Gas Bottles

Standard version (**Carbon Steel** shell) also available in Stainless Steel
Part numbers, Dimensions

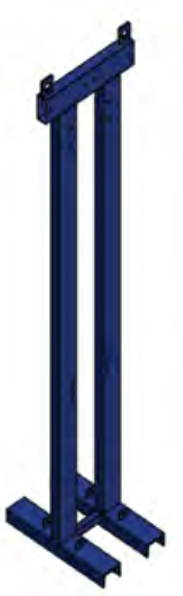

Type Part number	**Number of accumulators**	**Volume** Litres	**Weight** kg	**L** mm	**I** mm	**H** mm	**Base accumulator bracket + neck**
Skid MNF 2x BA 50 litres	2	100	30	350	550	2000	•
Skid MNF 3x BA 50 litres	3	150	42	550	550	2000	•
Skid MNF 4x BA 50 litres	4	200	30	350	550	2000	•
Skid MNF 6x BA 50 litres	6	300	42	550	550	2000	•

Type	**Accumulator Brackets**	**Painted external RAL 5005**	**Special painting or external treatments**	**Hooks for lifting**	**Forklift bar for lifting**	**Gas bottle tube connections in CS**	**Gas bottle tube connections in CS**
Skid MNF 2x BA 50 litres	•	•	o	•	o	o	o
Skid MNF 3x BA 50 litres	•	•	o	•	o	o	o
Skid MNF 4x BA 50 litres	•	•	o	•	o	o	o
Skid MNF 6x BA 50 litres	•	•	o	•	o	o	o

• Included

o Available on request
Drain for gas bottle not available

Dimensions L, I and D are nominal.
Other customized version available on request



Tel: +45 63 12 83 00 | Email: ps@hymatik.com | www.hymatik.com | Hvidkaervej 27a, DK-5250 Odense SV, Denmark

Accumulator Systems - Gas Bottles

Standard version (**Carbon Steel** shell) also available in Stainless Steel
Part numbers, Dimensions

Type Part number	**Number of accumulators**	**Volume** Litres	**Weight** kg	**L** mm	**I** mm	**H** mm	**Base accumulator bracket + neck**
Skid STD 4x BA 50 litres	4	200	36	570	680	1630	20109200050
Skid STD 6x BA 50 litres	6	300	39	802	680	1630	20109200050
Skid STD 8x BA 50 litres	8	400	42	1,034	680	1630	20109200050
Skid STD 10x BA 50 litres	10	500	45	1,266	680	1630	20109200050
Skid STD 12x BA 50 litres	12	600	48	1,498	680	1630	20109200050



Type	**Accumulator Brackets**	**Painted external RAL 5005**	**Special painting or external treatments**	**Hooks for lifting**	**Forklift bar for lifting**	**Gas bottle tube connections in CS**	**Gas bottle tube connections in CS**
Skid STD 4x BA 50 litres	•	•	o	•	o	o	o
Skid STD 6x BA 50 litres	•	•	o	•	o	o	o
Skid STD 8x BA 50 litres	•	•	o	•	o	o	o
Skid STD 10x BA 50 litres	•	•	o	•	o	o	o
Skid STD 12x BA 50 litres	•	•	o	•	o	o	o

Drain for gas bottle not available

- • Included
- o Available on request

Dimensions L, I and D are nominal.
Other customized version available on request

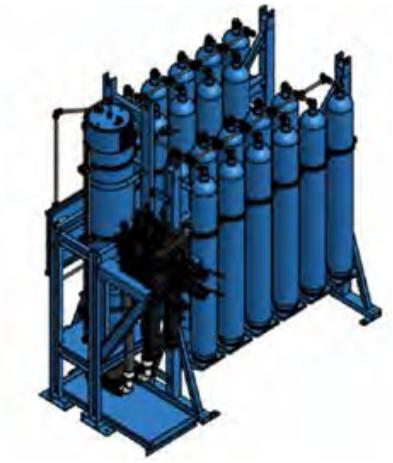

Accumulator Systems - Pistons

Standard version (**Carbon Steel** shell) also available in Stainless Steel
According to CE EN 1090-1
Part numbers, Dimensions



Type Part number	**Number of accumulators**	**Volume** Litres	**Weight** kg	**L** mm	**I** mm	**H** mm	**Base accumulator bracket + neck**
Skid EHP xxx/xx/250	1	250	98	500	450	2000	•
Skid EHP xxx/xx/350	1	350	117	668	500	2100	•
Skid EHP xxx/xx/540	1	540	160	670	550	2300	•

Type	**Accumulator Brackets**	**Painted external RAL 5005**	**Special painting or external treatments**	**Hooks for lifting**	**Forklift bar for lifting**	**Gas bottle tube connec-tions in CS**	**Gas bottle tube connections in CS**	**Control panel plate**
Skid EHP xxx/xx/250	•	•	o	•	o	o	o	o
Skid EHP xxx/xx/350	•	•	o	•	o	o	o	o
Skid EHP xxx/xx/540	•	•	o	•	o	o	o	o

Drain for gas bottle not available

- • Included
- o Available on request

Dimensions L, I and D are nominal.
Other customized version available on request



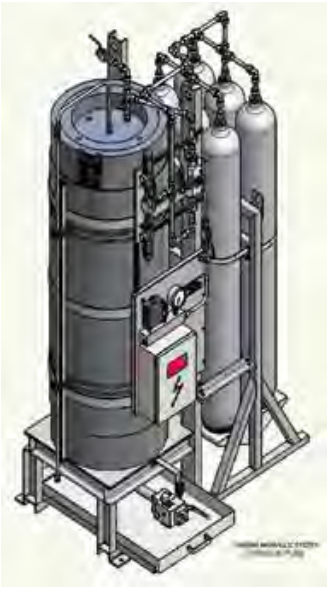





aerospace
climate control
electromechanical
filtration
fluid & gas handling
hydraulics
pneumatics
process control
sealing & shielding





Accumulator Sizing Questionnaires

For efficient sizing of accumulators



Parker OLAER

ENGINEERING YOUR SUCCESS.

DATA SHEET / QUESTIONNAIRE
Application : ENERGY STORAGE
Application : Reserve D'energie

Date:

Company Name: *Société :*	**Contact Name:** *Contact :*
Market Segment: *expl. O&G, Distribution, Marine, Industrial, Offshore, Service* *Marché :* *O&G, Distribution, Marine, Industrie, Offshore, Service*	**E-mail:** *E-mail :*
Address: *Adresse :*	**Telephone:** *Téléphone :*
Website: *Site Web :*	

SIZING DATA / DONNEES D'ENTREE

Describe application: *Décrire l'application :* **Please attached system scheme** **Merci de joindre un schéma de principe**			
Fluid Type: *Type de Fluide :*			
Volume of Fluid to be restored: *Volume de Fluide à restituer :*			Ltr.
Dual Time (Charge-Stabilisation-Discharge): *Cycle (Charge-Stabilisation-Décharge) :*			Sec
Maximum Working Pressure (P2): *Pression Maximale :*			Bar
Minimum Working Pressure (P1): *Pression Minimale :*			Bar
Fluid Temperature during Operation: *Température du fluide en fonctionnement :*	Min. °C		Max. °C
Certification: *Certificat :*			

TECHNICAL SPECIFICATION OR SPECIAL REQUIREMENTS HAVE TO BE FILLED IN
Specification technique ou demande spéciale à renseigner

- Material options / *Matériaux requis* :
- Special Port Connections and adaptors / *Raccordements souhaités* :
- Special Coatings / *Revêtement Spécial* :
- End user country / Pays destinataire d'installation :

If there is no special requirement, we will offer standard connection and material according to the fluid and PED 2014/68/EU

A defaut d'indication particuliere, nous préconiserons le raccordement standard et proposerons une construction compatible avec le fluide, suivant PED 2014/68/EU

DATA SHEET/QUESTIONNAIRE

TO DETERMINE THERMAL EXPANSION IN A CLOSED CIRCUIT

Determination du volume d'accumulateur pour compenser les écarts de volume dûs aux variations de température

Date:

Company Name: *Société :*	**Contact Name:** *Contact :*
Market Segment: *expl. O&G, Distribution, Marine, Industrial, Offshore, Service* *Marché :* *O&G, Distribution, Marine, Industrie, Offshore, Service*	**E-mail:** *E-mail :*
Address: *Adresse :*	**Telephone:** *Téléphone :*
Website: *Site Web :*	

SIZING DATA / DONNEES D'ENTREE

Fluid Type: *Type de Fluide :*			
Circuit Fluid Volume: *Volume de Fluide dans le circuit :*			Ltr.
Ambiant temperature: Temperature ambiante :			°C
Circuit Fluid Temperature during Operation: *Température de travail du Fluide dans le circuit :*	Min. °C		Max. °C
Maximum Working Pressure (P2): *Pression Maximale :*			Bar
Minimum Working Pressure (P1): *Pression Minimale :*			Bar
Fluid Thermal Expansion Coefficient: *Coefficient de Dilatation Thermique du Fluide :*			β
Certification: *Certificat :*			
Note : The accumulator is supposed to be subject to the same temperature variation of the circuit . Otherwise, either away from an an accumulator or by installation of a lyre dissipating calories. Note: L'accumulateur sera soumis à la même variation de température que le circuit. Dans le cas contraire, eloigner l'accumulateur ou bien installer une lyre dissipant les calories.			

TECHNICAL SPECIFICATION OR SPECIAL REQUIREMENTS HAVE TO BE FILLED IN

Specification technique ou demande spéciale à renseigner

- Material options / *Matériaux requis* :
- Special Port Connections and adaptors / *Raccordements souhaités* :
- Special Coatings / *Revêtement Spécial* :
- End user country / Pays destinataire d'installation :

If there is no special requirement, we will offer standard connection and material according to the fluid and PED 2014/68/EU

A defaut d'indication particuliere, nous préconiserons le raccordement standard et proposerons une construction compatible avec le fluide, suivant PED 2014/68/EU

DATA SHEET/ Questionnaire

Application : SURGE ARRESTOR / WATERHAMMER

Application : Anti Belier

Date

Company Name: *Société :*	**Contact Name:** *Contact :*
Market Segment: *expl. O&G, Distribution, Marine, Industrial, Offshore, Service* *Marché :* *O&G, Distribution, Marine, Industrie, Offshore, Service*	**E-mail:** *E-mail :*
Address: *Adresse :*	**Telephone:** *Téléphone :*
Website: *Site Web :*	

SIZING DATA / DONNEES D'ENTREE

Describe application: *Décrire l'application :* **Mandatory system scheme attached** **Schema de principe à joindre obligatoirement**			
Pump Technology: *Type de pompe :*			**Moment of inertia** Moment d'inertie Kg. m^2
Pump Flow Rate: *Débit à la pompe :*			l/min
☐ **Pump Start-Up *:** → *Démarrage de pompe * :*	**Time to maximal flow:** *Temps de démarrage de la Pompe :*		Sec
☐ **Pump Shut-Off *:** → *Arrêt de Pompe * :*	**Time to 0 flow rate:** *Temps de d'arrêt de la Pompe :*		Sec
☐ **Valve Opening *:** → *Ouverture de la Vanne * :*	**Opening valve time:** *Temps de d'ouverture de la Vanne:*		Sec
☐ **Valve Closing *:** → *Fermeture de Vanne * :*	**Closing valve time:** *Temps de Fermeture de Vanne :*		Sec
Valve technology : Type de vanne :	☐ **Ball valve /** Vanne simple ☐ **Butterfly valve /** Vanne papillon ☐ **Knife gate valve /** Vanne guillotine		
Fluid Type: *Type de Fluide :*			
Fluid Temperature: Température du fluide *:*			**°C**

** Choose your application case / Selectionner votre application*

Pipe Material: *Matériau de la conduite:*	
Pipe Length: *Longueur de la conduite:*	m
Pipe Internal Diameter: *Diamètre Intérieur la conduite:*	mm
Pipe Thickness : *Épaisseur de la conduite:*	mm
Maximum Allowable Pressure for Pipe: *Pression Maximale Admissible pour la conduite:*	Bar
Level difference between pump and valve: *Différence d'altitude entre la pompe et la vanne:*	m
ΔP between pump and valve: *ΔP entre la pompe et la vanne :*	Bar
Pressure at the Pump/Valve: *Pression à la Pompe/Vanne:*	Bar
Pressure at Maximum Flow Rate: *Pression à Débit Maximal:*	Bar
Pressure at 0 Flow Rate: *Pression à Débit nul:*	Bar
Flow Rate: *Débit:*	L/min
Minimum Allowable Working Pressure: *Pression minimale de Travail :*	Bar
Certification: *Certificat:*	
Note: If possible enclose also the schematic of valve closure sequence or pump start-up/shutt-off sequence. Nota: Si possible joindre le diagramme de fermeture de la vanne ou du spectre de démarrage/arrêt de la pompe.	

TECHNICAL SPECIFICATION OR SPECIAL REQUIREMENTS HAVE TO BE FILLED IN
Specification technique ou demande spéciale à renseigner

- Material options / *Matériaux requis* :
- Special Port Connections and adaptors / *Raccordements souhaités* :
- Special Coatings / *Revêtement Spécial* :
- End user country / Pays destinataire d'installation :

If there is no special requirement, we will offer standard connection and material according to the fluid and PED 2014/68/EU

A defaut d'indication particuliere, nous préconiserons le raccordement standard et proposerons une construction compatible avec le fluide, suivant PED 2014/68/EU

DATA SHEET/QUESTIONNAIRE

Application : PULSATION DAMPER FOR PUMP PULSATION

Application : Amortisseur de pulsation / silencieux hydraulique

Date:

Company Name: *Société :*	**Contact Name:** *Contact :*
Market Segment: *expl. O&G, Distribution, Marine, Industrial, Offshore, Service* *Marché :* *O&G, Distribution, Marine, Industrie, Offshore, Service*	**E-mail:** *E-mail :*
Address: *Adresse :*	**Telephone:** *Téléphone :*
Website: *Site Web :*	

SIZING DATA / Donnees D'Entree

Fluid Type: *Type de Fluide :*				
Type of Pump: *Type de Pompe :*			☐ Single Acting Simple effet ☐ Dual Acting Double effet	
Number of Elements: *Nombre d'Éléments :*			☐ Pistons Pistons ☐ Vanes Palettes	
Pump Rotation Speed: *Vitesse de rotation de la Pompe :*	Rpm t/min	**Piston Stroke /** *Course du piston*: ***Piston Area /*** *Surface du piston :*		mm mm²
Flow Rate: *Débit :*				L/min.
Requested Residual Pulse: *Pulsation Résiduelle souhaitée :*				☐ +/-2,5% ☐ +/- 5%
Working Pressure: *Pression de Travail :*				Bar
Working Temperature: *Température de Travail :*				°C
Viscosity at Working Temperature: *Viscosité à la Température de Travail :*				Cst
Allowable Pressure Drop: *ΔP Admissible :*				Bar

Tel: +45 63 12 83 00 | Email: ps@hymatik.com | www.hymatik.com | Hvidkaervej 27a, DK-5250 Odense SV, Denmark

Pipes dimensions
Dimensions des tuyauteries



Ø ca Internal Pipe Diameter: *Ø ca Diamètre Intérieur de la tuyauterie :*	mm
Ø c Internal Pipe Diameter: Ø c Diamètre Intérieur de la tuyauterie :	mm
Lc Pipe Length: Lc longueur de la tuyauterie :	mm
Certification: *Certificat :*	

TECHNICAL SPECIFICATION OR SPECIAL REQUIREMENTS HAVE TO BE FILLED IN
Specification technique ou demande spéciale à renseigner

- Material options / *Matériaux requis* :
- Special Port Connections and adaptors / *Raccordements souhaités* :
- Special Coatings / *Revêtement Spécial* :
- End user country / Pays destinataire d'installation :

If there is no special requirement, we will offer standard connection and material according to the fluid and PED 2014/68/EU

A defaut d'indication particuliere, nous préconiserons le raccordement standard et proposerons une construction compatible avec le fluide, suivant PED 2014/68/EU

Parker Worldwide

Europe, Middle East, Africa

AE – United Arab Emirates, Dubai
Tel: +971 4 8127100
parker.me@parker.com

AT – Austria, Wiener Neustadt
Tel: +43 (0)2622 23501-0
parker.austria@parker.com

AT – Eastern Europe, Wiener Neustadt
Tel: +43 (0)2622 23501 900
parker.easteurope@parker.com

AZ – Azerbaijan, Baku
Tel: +994 50 2233 458
parker.azerbaijan@parker.com

BE/LU – Belgium, Nivelles
Tel: +32 (0)67 280 900
parker.belgium@parker.com

BG – Bulgaria, Sofia
Tel: +359 2 980 1344
parker.bulgaria@parker.com

BY – Belarus, Minsk
Tel: +48 (0)22 573 24 00
parker.poland@parker.com

CH – Switzerland, Etoy
Tel: +41 (0)21 821 87 00
parker.switzerland@parker.com

CZ – Czech Republic, Klecany
Tel: +420 284 083 111
parker.czechrepublic@parker.com

DE – Germany, Kaarst
Tel: +49 (0)2131 4016 0
parker.germany@parker.com

DK – Denmark, Ballerup
Tel: +45 43 56 04 00
parker.denmark@parker.com

ES – Spain, Madrid
Tel: +34 902 330 001
parker.spain@parker.com

FI – Finland, Vantaa
Tel: +358 (0)20 753 2500
parker.finland@parker.com

FR – France, Contamine s/Arve
Tel: +33 (0)4 50 25 80 25
parker.france@parker.com

GR – Greece, Piraeus
Tel: +30 210 933 6450
parker.greece@parker.com

HU – Hungary, Budaörs
Tel: +36 23 885 470
parker.hungary@parker.com

IE – Ireland, Dublin
Tel: +353 (0)1 466 6370
parker.ireland@parker.com

IL – Israel
Tel: +39 02 45 19 21
parker.israel@parker.com

IT – Italy, Corsico (MI)
Tel: +39 02 45 19 21
parker.italy@parker.com

KZ – Kazakhstan, Almaty
Tel: +7 7273 561 000
parker.easteurope@parker.com

NL – The Netherlands, Oldenzaal
Tel: +31 (0)541 585 000
parker.nl@parker.com

NO – Norway, Asker
Tel: +47 66 75 34 00
parker.norway@parker.com

PL – Poland, Warsaw
Tel: +48 (0)22 573 24 00
parker.poland@parker.com

PT – Portugal
Tel: +351 22 999 7360
parker.portugal@parker.com

RO – Romania, Bucharest
Tel: +40 21 252 1382
parker.romania@parker.com

RU – Russia, Moscow
Tel: +7 495 645-2156
parker.russia@parker.com

SE – Sweden, Spånga
Tel: +46 (0)8 59 79 50 00
parker.sweden@parker.com

SK – Slovakia, Banská Bystrica
Tel: +421 484 162 252
parker.slovakia@parker.com

SL – Slovenia, Novo Mesto
Tel: +386 7 337 6650
parker.slovenia@parker.com

TR – Turkey, Istanbul
Tel: +90 216 4997081
parker.turkey@parker.com

UA – Ukraine, Kiev
Tel: +48 (0)22 573 24 00
parker.poland@parker.com

UK – United Kingdom, Warwick
Tel: +44 (0)1926 317 878
parker.uk@parker.com

ZA – South Africa, Kempton Park
Tel: +27 (0)11 961 0700
parker.southafrica@parker.com

North America

CA – Canada, Milton, Ontario
Tel: +1 905 693 3000

US – USA, Cleveland
Tel: +1 216 896 3000

Asia Pacific

AU – Australia, Castle Hill
Tel: +61 (0)2-9634 7777

CN – China, Shanghai
Tel: +86 21 2899 5000

HK – Hong Kong
Tel: +852 2428 8008

IN – India, Mumbai
Tel: +91 22 6513 7081-85

JP – Japan, Tokyo
Tel: +81 (0)3 6408 3901

KR – South Korea, Seoul
Tel: +82 2 559 0400

MY – Malaysia, Shah Alam
Tel: +60 3 7849 0800

NZ – New Zealand, Mt Wellington
Tel: +64 9 574 1744

SG – Singapore
Tel: +65 6887 6300

TH – Thailand, Bangkok
Tel: +662 186 7000

TW – Taiwan, Taipei
Tel: +886 2 2298 8987

South America

AR – Argentina, Buenos Aires
Tel: +54 3327 44 4129

BR – Brazil, Sao Jose dos Campos
Tel: +55 800 727 5374

CL – Chile, Santiago
Tel: +56 2 623 1216

MX – Mexico, Toluca
Tel: +52 72 2275 4200

© 2018 Parker Hannifin Corporation. All rights reserved.

Catalogue MSG10-4004/UK rev10, 02/2018-ZZ

EMEA Product Information Centre
Free phone: 00 800 27 27 5374
(from AT, BE, CH, CZ, DE, DK, EE, ES, FI, FR, IE, IL, IS, IT, LU, MT, NL, NO, PL, PT, RU, SE, SK, UK, ZA)

US Product Information Centre
Toll-free number: 1-800-27 27 537

www.parker.com

Your local authorized Parker distributor