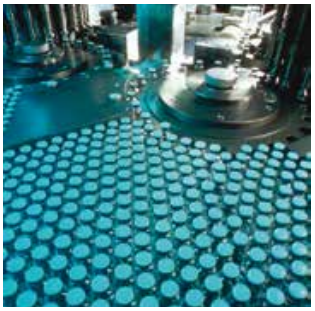



aerospace
climate control
electromechanical
filtration
fluid & gas handling
hydraulics
pneumatics
process control
sealing & shielding





Parker Pneumatic

A complete range of system components

Catalogue PDE2600PNUK December 2015



Parker

ENGINEERING YOUR SUCCESS.

Parker Hannifin

Parker Hannifin is one of the world's leading suppliers of products and solutions in Motion and Control. Using innovative product development and an acquisition strategy to increase our range of pneumatic products and solutions, we now have one of the broadest product offerings available in the market.

Our range now extends from the compressor to the point at which the air is used. This could be supplying power take off on a vehicle, moving a cylinder or gripper to milking cows.
The design and manufacture of bespokeintegrated solutions for air, gas and fluid control is one of our core specialisation.

The Parker network of distributors is the most comprehensive in the world, which means our products are available from specialist pneumatic distributors wherever you are located.

In the following pages are listed the core first choice products from across Parker which are aimed at the pneumatic market. From valves, actuators and air preparation to push in fittings quick connectors and tubing to customized systems. In this catalogue you will find products form Pneumatic Division Europe, Legris,Rectus Tema, Fluidconnectors, and Fluid Controls, presenting an unrivalled choice of products and solutions to suit virtually any application.

aerospace
climate control
electromechanical
filtration
fluid & gas handling
hydraulics
pneumatics
process control
sealing & shielding











WARNING

FAILURE OR IMPROPER SELECTION OR IMPROPER USE OF THE PRODUCTS AND/OR SYSTEMS DESCRIBED HEREIN OR RELATED ITEMS CAN CAUSE DEATH, PERSONAL INJURY AND PROPERTY DAMAGE.
This document and other information from Parker Hannifin Corporation, its subsidiaries and authorized distributors provide product and/or system options for further investigation by users having technical expertise. It is important that you analyze all aspects of your application and review the information concerning the product or system in the current product catalog. Due to the variety of operating conditions and applications for these products or systems, the user, through its own analysis and testing, is solely responsible for making the final selection of the products and systems and assuring that all performance, safety and warning requirements of the application are met. The products described herein, including without limitation, product features, specifications, designs, availability and pricing, are subject to change by Parker Hannifin Corporation and its subsidiaries at any time without notice.

SALE CONDITIONS

The items described in this document are available for sale by Parker Hannifin Corporation, its subsidiaries or its authorized distributors. Any sale contract entered into by Parker will be governed by the provisions stated in Parker's standard terms and conditions of sale (copy available upon request).

Linear Actuators	Catalogue No.	Page no.
ISO 15552 Cylinders (Premier Line) - P1D-S	PDE2570TCUK	24
ISO 15552 Cylinders (Basic Line) - P1D-B	PDE2659TCUK	37
ISO 15552 Cylinders (Ultra Clean Line) - P1D-C	PDE2642TCUK	48
ISO 15552 Cylinders (Pro Clean Line) - P1D-C	PDE2642TCUK	51
ISO 15552 Cylinders (Tie Rod line) - P1D-T	PDE2667TCUK	54
ISO 15552 Cylinders (Extreme Line) - P1D-X	PDE2662TCUK	64
ISO 15552 Cylinders with Rod Lock - P1D-L / P1D-H	PDE2570TCUK	69
Rod Guidance Modules for ISO Cylinders - P1E-4	PDE2570TCUK	73
Sensors - P8S-G	PDE2570TCUK	77
ISO 6432 Mini Cylinders - P1A-S	PDE2564TCUK	80
All Round Cylinders R Series bores 32 to 63mm	Upon Request	86
ISO 6431 / 6432 Stainless Steel Cylinders bores 10 to 125 - P1S	PDE2535TCUK	90
ISO 21287 Compact Cylinders - P1P	PDE2660TCUK	101
ISO 15524 Compact Cylinders - P1Q	PDE2663TCUK	115
Cartridge Cylinders - P1G	PDE2571TCUK	119
Short Stroke Cylinders - C05	PDE2560TCUK	120

Rodless Cylinders	Catalogue No.	Page no.
Rodless Cylinders - OSP-P	P-A4P011GB	121
Rodless Cylinders - OSP-L	P-A4P012GB	161
Rodless Magnetic Cylinders - P1Z	P-A4P019GB	178

Handling Products	Catalogue No.	Page no.
Grippers - P5G	PDE2669TCUK	195
Rotating Tables - P5RS	PDE2669TCUK	203
Slide Tables - P5SS	PDE2669TCUK	205
Stopper Cylinders - STV / STVR	Upon Request	214
Compact Guided Cylinders - P5T	PDE2557TCUK	222
Twin Rod Cylinders - RDV and AZV	Upon Request	226
Shock Absorbers - SA	P-A4P018GB	233
Shock Absorbers - MC-SC	PDE2524TCUK	237

Air Motors	Catalogue No.	Page no.
Stainless Steel Air Motors - P1V-S	PDE2554TCUK	240
Robust Air Motors - P1V-M	PDE2539TCUK	246
Vane Air Motors - P1V-A & B	PDE2541TCUK	251
Radial Piston Air Motors - P1V-P	PDE2538TCUK	269

Rotary Actuators	Catalogue No.	Page no.
Rotary Vane Actuators - PRO / PRN	PDE2502TCUK	278
Rotary Vane Actuators - PV	PDE2648TCUK	280
Rotary Rack and Pinion Actuators - RA	PDE2556TCUK	281
Rotary Rack and Pinion Actuators - VRS / VRA	PDE2655TCUK	282

Tel: +45 63 12 83 00 | Email: ps@hymatik.com | www.hymatik.com | Hvidkaervej 27a, DK-5250 Odense SV, Denmark

Thrust Drives	Catalogue No.	Page no.
Air Bellows - 9109	PDE2576TCUK	288
Air Bellows - SP	Upon Request	291
Thrust Cylinders - C0D / C0P	PDE2563TCUK	293
Hydraulic Clamp Cylinders - VB	PDE2636TCUK	296
Hydrochecks - B181	2117-GB	297

Electromechanical Drives	Catalogue No.	Page no.
Electric Linear Actuators - OSP-E / BHD	P-A4P017GB	300
Electric Linear Actuators - HMR	P-A4P024GB	342

Valves	Catalogue No.	Page no.
Metal Spool Valves - Viking Lite	PDE2658TCUK	355
Metal Spool Valves - Viking Xtreme	PDE2569TCUK	367
Adex Directional Control Valves - A05/A12	PDE2622TCUK	383
Manual & Mechanically Operated Valves - B45/53	PDE2623TCUK	388
Directional Control Valves - VA	PDE2617TCUK	398
Heavy Duty Poppet Valves	PDE2630TCUK	400
DX - ISO 15407-1 ISOMAX	PDE2589TCUK	405
DX - ISO 5599-1 ISOMAX	PDE2589TCUK	408
H Series ISO 15407-1	PDE2589TCUK	415
H Series ISO 5599-2	PDE2589TCUK	425
H Series Micro Valves	PDE2597TCUK	440
Moduflex Valve System - P2M	PDE2536TCUK	457
H Series Industrial Communication Moduflex & Turck BL67	PDE2635TCUK	481
Interface - PS1	PDE2626TCUK	506
PVL-B2 Stackable and Stand-alone Inline Valves	PDE2682TCUK	509
Compact Valves - PVL	PDE2628TCUK	523
Logic Processing	PDE2619TCUK	527
Air Saver Unit	PDE2672TCUK	530
Control and Process Duty - PXB	PDE2587TCUK	535
Limit Switches - PXC	PDE2629TCUK	537
Two Hand Control Units - PXP	PDE2627TCUK	538
Microfix Solenoids - P2D	Upon Request	539
Solenoid Operators - 15mm - P2E	Upon Request	540
Solenoid Valves - Lucifer	Upon Request	543
Flat Slide Valves - DRS	Upon Request	567
Pedal Actuated Valves - F	Upon Request	569
Stop Valves - ARKV	Upon Request	571
Valves - K9	Upon Request	573
Directional Control Valves - S9	Upon Request	579
Solenoid Poppet Valves - EV	Upon Request	608
Solenoid Poppet Valves - V9	Upon Request	609

Air Preparation & Airline Accessories	Catalogue No.	Page no.
Parker Global Air Preparation System	PDE2676TCUK	614
Lite Series Air Preparation System - P3L	PDE2661TCUK	638
Lite Series Air Preparation System - P3S	Upon Request	640
Lite Air Preparation System - P3X	PDE2620TCUK	645
Modular Membrane Dryers - P3X	PDE2640TCUK	651
Air Preparation System - P3Y	PDE2631TCUK	653
Air Preparation System - P3Z	PDE2641TCUK	659
Global Proportional Technology	PDE2611TCUK	661
Proportional Pressure Regulators - P3X	PDE2620TCUK	663
Proportional Pressure Regulators - P3Y	PDE2631TCUK	664
Proportional Pressure Regulators - P3Z	PDE2641TCUK	665
Precision Pressure Regulators - Lucifer	Upon Request	666
Parker Angle Seat Valves	Upon Request	685
Precision Pressure Regulators	PDE2611TCUK	696
Prep-Air II® Miniature FRLs	PDE2591TCUK	698
Stainless Steel FRLs	PDE2504TCUK	700
Compressed Air Filters - P3T	PDE2603TCUK	703
Dry Air System - P3TJ	PDE2602TCUK	711
Pressure Switches	Upon Request	714
AirGuard Protection System	PDE2604TCUK	720
Cylinder Controls	PDE2566TCUK	722
Micrometer & Heavy Duty Inline Flow Control Valves	PDE2566TCUK	724
Shuttle Valve and Quick Exhaust Valves	PDE2566TCUK	725
Exhaust Silencers	PDE2566TCUK	727

Fittings, Tubing and Couplers	Catalogue No.	Page no.
Legris Fittings and Tubing	CAT/0540/UK	731
Rectus Couplers	CAT3800-PNEU-GB	773

Tel: +45 63 12 83 00 | Email: ps@hymatik.com | www.hymatik.com | Hvidkaervej 27a, DK-5250 Odense SV, Denmark

Linear Actuators

ISO 15552 Cylinders - P1D-S



- Premier Line
- Available in Ø32 to 125 mm bores
- PUR seals for long service life
- Drop-in sensors
- Corrosion resistant design
- Magnetic piston as standard
- Lubricated with food grade grease

p24

ISO 15552 Cylinders - P1D-B



- Basic Line
- Available in Ø32 to 125 mm bores
- PUR seals for long service life
- Drop-in sensors
- Corrosion resistant design
- Magnetic piston as standard
- Lubricated with food grade grease

p37

ISO 15552 Cylinders - P1D-C



- Ultra Clean Line
- Available in Ø32 to 125 mm bores
- PUR seals for long service life
- Corrosion resistant design
- Lubricated with food grade grease

p48

ISO 15552 Cylinders - P1D-C



- Pro Clean Line
- Available in Ø32 to 125 mm bores
- PUR seals for long service life
- Drop-in sensors
- Corrosion resistant design
- Magnetic piston as standard
- Lubricated with food grade grease

p51

ISO 15552 Cylinders - P1D-T



- Tie Rod Line
- Available in Ø32 to 320 mm bores
- PUR seals for long service life
- Magnetic piston as standard
- Adjustable cushioning as standard
- High and Low temperature versions
- ATEX certified on option

p54

ISO 15552 Cylinders - P1D-X



- Extreme Line
- Available in Ø32 to 125 mm bores
- PUR seals for long service life
- Drop-in sensors
- Corrosion resistant design
- Magnetic piston as standard
- High and Low temperature versions

p64

Rod Lock Cylinders - P1D-L / P1D-H



- Available in Ø32 to 125 mm bores
- PUR seals for long service life
- Drop-in sensors
- Corrosion resistant design
- Magnetic piston as standard
- Lubricated with food grade grease

p69

ISO 6432 Mini Cylinders - P1A-S



- Available in Ø10 to 25 mm bores
- Corrosion resistant design and low weight construction
- Magnetic piston as standard
- End stroke buffers for long service life
- Available with adjustable cushioning

p80

Tel: +45 63 12 83 00 | Email: ps@hymatik.com | www.hymatik.com | Hvidkaervej 27a, DK-5250 Odense SV, Denmark

Linear Actuators

All Round Cylinders R Series



- Available in Ø32 to 63 mm bores
- Double acting without cushioning
- Double acting with adjustable cushioning
- Pivot mounted on the front and rear cylinder covers
- Magnetic piston as standard, non magnetic on option

p86

ISO 6432 Stainless steel - P1S



- Available in Ø10 to 25 mm bores
- Magnetic piston as standard
- Double and single acting
- End stroke buffers for long service life
- Available with adjustable cushioning

p90

ISO 6431 Stainless steel - P1S



- Available in Ø32 to 125 mm bores
- Clean, smooth washdown design
- Magnetic piston as standard
- Adjustable cushioning for long service life

p95

ISO 21287 Compact Cylinders - P1P



- Available in Ø20 to 100 mm bores
- Corrosion resistant design and low weight construction
- PUR seals for long service life
- Drop-in sensors
- Magnetic piston as standard
- High and Low temperature versions

p101

ISO 15524 Compact Cylinders - P1Q



- Available in Ø12 to 100 mm bores
- Magnetic or non magnetic versions
- Flush fit sensors
- Buffer cushioning as standard
- Piston wear ring on Ø32 to 100 mm
- Tapped both ends

p115

Cartridge Cylinders - P1G



- Non - lube operation
- Corrosion resistant design
- Integral mounting
- Compact construction
- Single acting as standard

p119

Short Stroke Cylinders - C05



- Short stroke cylinders providing high clamping forces
- Compact dimensions for confined spaces
- Single and double acting versions
- Simple installation and mounting

p120

Rodless Cylinders

Rodless Cylinders - OSP-P



- Completely modular design
- Compact design
- Service intervals up to 8,000km
- Widest capability for speed, load and movement profiles
- High loads and moments
- Wipersystem with automatic re-adjustment

p121

Rodless Cylinders - OSP-L



- Completely modular design
- Compatible with the comprehensive ORIGA OSP system component range
- High loads and moments
- Space saving
- For a wide range of loads, speeds and motion profiles

p161

Rodless Magnetic Cylinders - P1Z



- Double acting with guide
- Magnetically coupled without mechanical connection
- Mechanical protection in case of occasional overload due to magnetic uncoupling
- Piston chamber and Slide are pressure tight
- Pressure tight and leak free system

p178

Tel: +45 63 12 83 00 | Email: ps@hymatik.com | www.hymatik.com | Hvidkaervej 27a, DK-5250 Odense SV, Denmark

Handling Products

Grippers - P5G



- Available with range of bore sizes Ø10 to 32 mm
- Highly accurate air driven device for holding work-piece.
- Magnetic as standard
- Reference points on gripping fingers are standard

p195

Rotating Tables - P5RS



- Bores Ø16, 20, 25 and 32 mm
- Twin rack and pinion
- Adjustable between 0° to 190°
- Magnetic piston standard
- Stroke adjusters standard
- Available with shock absorbers

p203

Slide Tables - P5SS



- High precision
- Bores Ø6, 8, 12, 16, 20 and 25mm
- Combination of dual bore cylinder and linear rail
- Magnetic piston standard
- Rubber bumper standard
- Stroke adjusters available
- Shock absorbers available

p205

Stopper Cylinders - STV / STVR



- Available with hydraulic Industrial shock absorbers
- Vertical and horizontal versions
- Integrated shock absorber for heavy conveyed loads
- Roller for lower conveyed load weights
- Direct stopping piston rod for heavy conveyed loads

p214

Compact Guided Cylinders - P5T



- Available in Ø16 to 100 mm bores
- Stainless steel guide rods
- Wide range of standard strokes
- Flexible porting as standard
- Buffer cushioning as standard

p222

Twin Rod Cylinders - RDV / AZ



RDV Series
- Available in Ø25 mm bore

AZ Series
- Available in Ø32 to 100 mm bores
- Non rotating
- Double acting
- Adjustable cushioning
- Magnetic piston as standard

p226

Shock Absorbers - SA



- Integral stop collar
- Soft pad
- Rectangualr flange
- Foot mounting
- Adjustable without return spring, for use with external air-oil tank

p233

Shock Absorbers - MC-SC



- Compact and heavy duty versions
- High energy absorption
- Low return force
- Long service life
- Increases productivity
- Reduces maintenance

p237

Tel: +45 63 12 83 00 | Email: ps@hymatik.com | www.hymatik.com | Hvidkaervej 27a, DK-5250 Odense SV, Denmark

Air Motors

Stainless Steel Air Motors - P1V-S



- Power from 0,02kW to 1,2kW
- All stainless steel design
- ATEX approved
- No-lube intermittent operation as standard
- External seals in fluor rubber (FPM)
- 0,2, 0,3 and 1,2kW Brake option
- Drilling, milling and grinding motors
- Power from 0,08 to 1,0kW
- Drill check and collet versions

p240

Robust Air Motors - P1V-M



- Power 0,2, 0,4, 0,6, 0,9 and 1,2 kW
- Robust design
- ATEX approved
- Ideal for industrial applications
- Gear less version and integrated gear boxes version
- Patented vane change system
- Free speeds from 32 up to 10500 rpm
- Torque from 0,38 Nm up to 120Nm
- Foot and flanges mountings

p246

Vane Air Motors - P1V-A & B



- Power 1600, 2600 and 3600 watts
- For heavy duty applications
- Free speed of 9000 rpm
- Torque from 40 Nm to 4000 Nm
- Standard equipped with flange mounting
- Power 5,1 kW, 9 kW and 18 kW
- For the very heavy duty applications
- Free speed of 6000 rpm
- High torque from 16.2 Nm to 57 Nm

p251

Radial Piston Air Motors - P1V-P



- Power 0,73 kW, 0,125kW and 0,228kW
- Low speed and high torque
- Available as base and brake motors
- Free speed from 2200 down to 7,4 rpm
- High torque from 0,637Nm up to 500Nm

p269

Rotary Actuators

Rotary Vane Actuators - PRO / PRN



- Compact design
- Durable construction
- Long maintenance-free life
- High output torque/weight ratio
- Wide choice of torques available (up to 247 Nm)
- Vane type

p278

Rotary Vane Actuators - PV



- Double acting actuators
- Single or double vane
- Compact smooth design
- Uniform torque in both directions
- Angle adjustment and sensors available.
- Vane type

p280

Rotary Rack and Pinion Actuators - RA



- 5 unit sizes
- Torque from 20 to 200 Nm
- Turning angles of 90° or 180°
- Keyway output shaft
- Direct Namur valve connection
- Rack and pinion

p281

Rotary Rack and Pinion Actuators - VRS/VRA



- Bores from Ø32 to 125mm with rotative angles of 96°, 186° and 366°
- Magnetic piston versions can be fitted with P8S sensors and brackets
- Operates with dry, lubricated or non lubricated air

p282

Tel: +45 63 12 83 00 | Email: ps@hymatik.com | www.hymatik.com | Hvidkaervej 27a, DK-5250 Odense SV, Denmark

Thrust Drives

Air Bellows - 9109 / SP



- 10 sizes, diameters 70 to 660 mm, Strokes from 20 to 410 mm, single, double or triple convolutions (removable type)
- 7 sizes, diameters 82 to 288 mm, Strokes from 55 to 170 mm, single or double convolutions (crimped type)
- High thrust and frictionless movement
- Maintenance free

p288

Thrust Cylinders - C0D / C0P



- Thrust cylinders provide large forces
- Compact dimensions
- C0D, diaphragm type
- C0P, piston type
- Available in single and double acting versions

p293

Hydraulic Clamp Cylinders - VB



- Single acting cylinders with built-in hydro-pneumatic intensifier
- Compact size with large clamping forces up to 2700 daN (depending on air pressure)
- Operated using a compressed air supply, no special installation required

p296

Hydrochecks - B181



- Range of imperial sizes
- Gives smooth control feeds
- Strokes up to 450 mm.

p297

Electromechanical Drives

Electric Linear Actuators - OSP-E / BHD



- For particularly high requirements regarding loads and forces
- For high-speed applications and highly dynamic motion profiles
- BHD with toothed belt and integrated heavy duty guide: roller guide or re-circulating ball bearing guide

p300

Electric Linear Actuators - HMR



- Three alternative drive technologies in one profile
- Unique flexibility and reliability
- High speed and precision
- Two profile versions, four profile sizes
- Optional IP54 snap-in covers

p342

Tel: +45 63 12 83 00 | Email: ps@hymatik.com | www.hymatik.com | Hvidkaervej 27a, DK-5250 Odense SV, Denmark

Valves

Metal Spool Valves - Viking Lite



- 3 sizes: G1/8, G1/4 and G3/8.
- Large flow capacity with short change-over times.
- Low change over pressure.
- Dynamic bi-directional spool seals.
- Do not require lubrication in operation but can also be installed in systems that are lubricated.

p355

Metal Spool Valves - Viking Xtreme



- 4 sizes: G1/8, G1/4, G3/8 and G1/2.
- Compact design with good corrosion resistance.
- Wide range of 5/2 and 5/3 versions.
- High and low temperature versions available for transport applications.

p367

Adex Directional Control Valves



- 2 sizes: M5 and 1/8”
- Compact body with large flow
- Quick response time, faster than 10ms
- Expected life time more than 50,000,000 cycles
- Low power consumption only 0.6W

p383

Manual & Mechanically Operated Valves



- G1/8, G1/4 body ported
- Rugged die cast body
- 3/2, 5/2 & 5/3 configurations
- Stainless steel spool
- Viton body seals as standard
- Integral mounting holes
- Manual, mechanical and automatic actuators.

p388

Directional Control Valves - VA



- Rugged valves for heavy duty applications
- Large and robust actuators for easy operation
- Excellent corrosion resistance
- Integral mounting holes
- Panel mounting versions

p398

Heavy Duty Poppet Valves



- G3/8 & G1/2 body ported
- 2/2 & 3/2 NC spring return as standard
- High flow poppet design
- Manual and mechanical and solenoid actuators
- Light actuation forces
- Integral mounting holes.

p400

DX ISO Valves - ISOMAX



- ISO sizes 02, 01, 1, 2 & 3 sub base & manifold mounted valves
- ISO 5599-1 & ISO 15470-1
- Excellent reliability, in excess of 100 million cycles
- Ceramic slide technology operates on Lubricated or non-lube air

p405

H Series ISO Valves



- ISO sizes 02, 01, 1, 2 & 3 sub base mounted valves
- ISO 5599-1, ISO 5599-2, ISO 15470-1 & ISO15470-2
- Stable long lasting performance
- Heavy duty metal bodies
- Wear compensating seal technology

p413

Tel: +45 63 12 83 00 | Email: ps@hymatik.com | www.hymatik.com | Hvidkaervej 27a, DK-5250 Odense SV, Denmark

Valves

H Series Micro Valves



- Up to 8 pneumatic functions on a 42mm width metal sub base
- 4 valve modules back to back for compact dimensions
- High performance
- Optimized flow for 6mm tubes
- Side or bottom mounted manifolds available.

p440

Moduflex Valves System - P2M



- High flow, compact size.
- Mixable valve sizes.
- Stand alone valves, modular islands with individual, multi connector or bus connections.
- Integrated selectable internal or external pilot supply and exhaust.

p457

H Series Industrial Communication



- A complete field bus communication offering for valve islands
- Extremely fast I/O back plane uses change of state connections to maximise performance
- UL,C-UL and CE certifications

p481

Interface - PS1



- High speed poppet valve
- Push-in connection
- Built-in terminal block
- Pneumatic output indicator
- DIN rail mounting

p506

Inline Valves - PVL-B2



- High flow – Compact size with a 18 mm width body
- Push-in fitting diameter 6mm, 8mm or threaded G1/8”
- DIN rail or surface mounting
- Enonomic clip connector (IP40) or DIN Form C connection (IP65)
- Light weight construction

p509

Compact Valves - PVL



- High flow, compact size
- Push-in or threaded connection
- DIN rail or block mounting
- Light weight construction

p523

Logic Processing



- Complete range of logic processing modules
- Stand alone or stackable and combinable units
- Ultra fast response times
- Visual indication
- DIN rail mounting.

p527

Air Saver Unit



- Large reductions in plant air consumption.
- Savings in plant compressor power consumption.
- Reduction in plant CO_2 emissions.
- Big contribution to energy-saving activities.

p530

Valves

Control & Process Duty - PXB



- Facia mounted operators
- 3/2 NO or NC versions
- Pneumatic valves combinable with electrical switches
- Modular construction
- Wide choice of actuators.

p535

Limit Switches - PXC



- 3/2 Nc spring return as standard
- Ø4mm, M5 & G1/8 ported versions
- Miniature and Compact designs
- Wide choice of actuators include levers, rollers & ultra light whisker types.

p537

Two Hand Control Units - PXP



- Ergonomic design
- Robust polymer or metal enclosure
- Meets requirements for protection against accidental operation and tampering
- Conforms to EN574 and EN954-1 requirements

p538

Microfix Solenoids - P2D



- 12 mm solenoids sub-base mounting type
- Instant push-in fittings for inlet (Ø 8 mm) and outlets (Ø 4 mm)
- Brass silencer
- Quick response time
- Multi-functional manual override

p539

Flat Slide Valves - DRS



- Rotary lever
- Rotary switch

p567

Stop Valves - ARKV



- Pneumatic 2 way valve
- Poppet valve normally closed
- Mounting - Direct piping

p571

3/2 Way Valves - K9



- Rotary lever, indexed
- Rotary lever, spring return
- Rotary lever, indexed, secured in two positons
- Pushbutton
- Cam operation
- Toggle cam operation
- Plunger operated
- Cam operated, free cam left or free cam right
- Pivoted lever

p573

Directional Control Valves - S9



- Hand lever
- Pneumatic
- Electrical pilot operated
- Electrical pilot operated with external pilot air
- Panel mounting actuators for mounting diameter to DIN 43696

p579

Tel: +45 63 12 83 00 | Email: ps@hymatik.com | www.hymatik.com | Hvidkaervej 27a, DK-5250 Odense SV, Denmark

Vacuum Products

Vacuum Pads



- **Flat & Bellow Pads**
- **Male & Female Connections**
- **Different Materials**
- **Range of Diameters**

Vacuum Ejectors



- **Basic Ejectors**
- **Basic Ejectors with electro-mechanical Switch**
- **In-line Ejectors**
- **Integrated Ejectors small & large**

Vacuum Sensors



- **-1 to +10 bar**
- **Analog and/or Digital Outputs**
- **With display**

Vacuum Accessories



- **High performance silencers and vacuum filters**
- **Electronic cables with M8 connector 4 pin**

Tel: +45 63 12 83 00 | Email: ps@hymatik.com | www.hymatik.com | Hvidkaervej 27a, DK-5250 Odense SV, Denmark

Air Preparation & Airline Accessories

Global Air Preparation System



- Space saving integral gauge (P31 size only)
- Manifold style regulators available
- OSHA compliant shut-off valves
- Soft-Start & Quick Dump valves
- Electronic Proportional Regulator

p614

Lite Series Air Preparation System - P3L



- Compact body ported units
- Port size G1/4
- Unique deflector plate ensuring maximum water and particulate removal
- Solid control piston with lip seal for extended life.
- Proportional oil delivery over a wide range of air flows.

p638

Lite Series Air Preparation System - P3S



- Port size $G^1/_4$ - $G^3/_8$
- Modular air preparation series
- Robust and lightweight zinc body construction
- Rolling diaphragm for extended life
- Soft start valve for slow pressure build up in pneumatic circuits
- Dump valves for quick down stream pressure exhaust

p640

Lite Air Preparation Series - P3X



- Integral 1/2 or 3/4 ports
- High efficiency 5 micron element as standard
- Excellent water removal efficiency
- Secondary pressure ranges 8 and 16 bar
- Rolling diaphragm for extended life
- Membrane dryers

p645

Modular Membrane Dryers - P3X



- Removes water vapour & lowers the PDP
- Compact design
- No electrical connections necessary
- Suitable for hazardous environments
- No moving parts
- Maintenance & wear free
- No change in air consumption
- Low pressure drop less than 0.1 bar

p651

Air Preparation System - P3Y



- Integral 3/4 or 1” ports (BSPP or NPT)
- High efficiency element as standard
- Excellent water removal efficiency
- Secondary pressure ranges 12 and 16 bar

p653

Air Preparation System - P3Z



- Self relieving feature plus balanced poppet provides quick response and accurate pressure regulation.
- Port flanges $G1^1/_2$” & 2” to a 2” body.
- Proportional oil delivery over a wide range of air flows.

p659

Global Proportional Technology



- Very fast response times
- Accurate output pressure
- Micro parameter settings
- Selectable I/O parameters
- Quick, full flow exhaust
- LED display indicates output pressure
- No air consumption in steady state
- Multiple mounting options
- Protection to IP65

p661

Tel: +45 63 12 83 00 | Email: ps@hymatik.com | www.hymatik.com | Hvidkaervej 27a, DK-5250 Odense SV, Denmark

Air Preparation & Airline Accessories

Precision Pressure Regulators



- High repeatability
- High relief capacity on R220 model
- High flow capacity on R230 model

p696

Prep-Air II® Miniature FRLs



- Compact body ported units.
- Port sizes G1/8 and G1/4.
- Unique deflector plate ensuring maximum water and particulate removal.
- Solid control piston with lip seal for extended life.
- Proportional oil delivery over a wide range of air flows.

p698

Stainless Steel FRLs



- Suitable for Marine & Offshore applications
- Chemical / Petroleum and process industries
- Coalescing filters are designed for removing oil and water aerosols down to 0.01µ
- Suitable for food industry applications

p700

Compressed Air Filters - P3T



- Tested in accordance with ISO 8573.9
- High liquid removal efficiencies at all flow conditions
- Low pressure losses for low operational costs
- Multiple port sizes for a given flow rate provides increased flexibility during installation

p703

Dry Air System - P3TJ



- Designed in accordance with ASME VIII Div.1, approved to CSA/UL/CRN and fully CE Marked (PED, EMC, LVD) as standard.
- Flexible installation utilising the multiple in-line inlet & outlet connection ports.
- Can be Floor, Bench or Wall/ Canopy mounted.

p711

Pressure Switches



- Suited for intrinsically safe operation
- Especially compact design
- High switching frequency
- Attractive design
- Shock proof up to 30 g

p714

AirGuard Protection System



- Maintenance friendly, Repair possible while plant is still operating.
- Reliable and tamperproof, No adjustment necessary.
- Complies with EU current standard
- Complies with the 2009 ISO4414 (5.4.5.11.1)

p720

Cylinder Controls



- "Push-in" or threaded connection
- Multifunction options
- Fit directly to cylinder ports
- Swivelling pilot banjo
- Pneumatic, Electric or Electronic back pressure sensor

p722

Tel: +45 63 12 83 00 | Email: ps@hymatik.com | www.hymatik.com | Hvidkaervej 27a, DK-5250 Odense SV, Denmark

Air Preparation & Airline Accessories

Micrometer Flow Control Valves



- Micrometer type adjustment
- Fine control
- Non-return and needle valves

p724

Heavy Duty Inline Control Valves



- Screw driver adjustment
- Rugged bodies
- High flow rate
- High flow by-pass
- Wide range of sizes

p724

Shuttle Valve & Quick Exhaust Valves



- Increases piston speeds, super sensitive diaphragm.
- May be used as differential shuttle valve.
- Allows two separate signals to be applied to the air pilot.
- 0,6 bar differential, Viton seals as standard.
- Aluminium or polymer bodies

p725

Exhaust Silencers



- All plastic ultra light weight versions
- Sintered metal
- All metal versions for heavy duty applications
- Versions with push-in connections
- High noise level reduction
- Low back pressure generation

p727

Restrictors - Silencers



- Metal, stainless steel or plastic versions
- Screwdriver adjustment
- Simple control of cylinder speeds
- High noise level reduction

p728

Reclassifier - Silencers



- Removes oil mist from exhaust airs
- Efficiently silences exhaust air
- Improves working conditions

p729

Fluid Controls

2/2 / 3/2 - Way Valves for Air



- 1/8", 1/4" & 2" pipe mount and flange version
- Pressure range up to 40 bar
- Normally open and normally closed
- Direct or servo-acting
- Long life expectancy, highest reliability
- Manual override optional
- Excellent response time
- Can be mounted with Lucifer® coil families

p543

3/2 - 5/2 NAMUR Valves



- 1/4" - 1/2" NAMUR interface
- Patented NAMUR conversion plate
- Highflow Qn: 3000 L/min
- Solenoid or pneumatic version
- High resistance aluminium
- ATEX zone 22 certified products
- Fast switching application

p549

Precision Pressure Regulators



- 1/4" - 2" pipe mount
- Lucifer® Programmable EPP4 all parameters fully adjustable through the PC software calys
- Low power consumption (2.2W), energy savings
- High responsiveness and low hysteresis (0.5%)
- Flexible remote display
- Compact design and light
- Easy to use software

p666

Standard, ATEX and IECEx Coils



- Modular concept for dedicated valves
- D / B Terminal Standard
- Various AC / DC voltages
- Various IP65-IP67, 100% ED
- Meet latest international & national codes
- ATEX zone 0, 1, 2, 20, 21, 22 protected ia, ib, dm, d, e, m, me, n

p561

Solenoid Valves for Fluid Control Applications



Fluid control products have been designed to offer customers the ultimate in performance. Every valve is engineered for optimal operation, is constructed with modern machinery that use stringent processes, and provides standard features not necessarily offered in any competitive line. The Fluid Control Series portfolio offers a broad range of 2/2, 3/2 and 5/2 solenoid valves. Sizes range from 1/8" to 3", with Kv as high as 1385 L/min. Pressure capabilities range up to 200 bar; the whole range is available with various seal materials, such as NBR, FKM, EPDM, PTFE, PCTFE, PUR and Ruby. Brass, Aluminium, Stainless steel and Plastic Valves are available to control a wide variety of air, neutral gases and liquids, water, oils, process fluids and steam.

p543

For further information see: www.parker.com/fcde

Tel: +45 63 12 83 00 | Email: ps@hymatik.com | www.hymatik.com | Hvidkaervej 27a, DK-5250 Odense SV, Denmark

CONNECTIC Solutions for Compressed Air

Legris LF3000 Push-in Fittings



- Brass / polymer fittings for standard applications.
- Instant connection/disconnection.
- Full flow, automatic sealing.
- Vacuum capability.
- Compact & aesthetic, lightweight.
- Very extensive range.
- -20°C to 80°C, maximum 20 bar (depending on fitting type and OD).

p732

Legris Function Fittings



- Flow control regulators, blocking fittings, mini-ball valves, non-return valves, silencers...
- Used on pneumatic devices in many industrial applications: factory automation, packaging, multi-purpose robots, material handling, textile, printing, auto process, machine tools.
- 0°C to 70°C, from 1 to 10 bars (depending on fitting type).

p739

Legris Universal Compression Fittings



- Brass or stainless steel (316L).
- Withstand high temperatures and pressures (max. 80 bars, 250°C).
- Resistant to aggressive and corrosive environments.
- A large range for many applications.
- Many accessories.

p746

Legris LF3600 Push-in Fittings



- Nickel-plated brass instant fittings for demanding applications.
- For air and fluid transportation.
- FDA, 1935/2004/CE.
- -20°C to 150°C at 30 bars.
- Wide range.
- Compact & robust design.

p747

Legris LF3900/3800 Push-in Fittings



- Stainless steel 316L fittings for severe conditions.
- Hygienic design.
- Extreme chemical and mechanical resistance.
- Fittings suitable for permanent food contact (FKM seals in accordance with FDA and 1935/2004/CE directives).
- Wide range: 21 shapes, diameters 4 to 12 mm.

p753

Legris Tubing



- Standard tubing made of PA, PU, FEP 140, and PE.
- PA and PU hoses in 7 colours.
- Multi, twin and spiral; anti-spark, anti-static.
- 25 or 100 m rolls in Tubepack® box.
- Large pack on drum.
- Hoses made of braided PVC.
- Self-fastening hoses.

p756

Safety Couplers / Blowguns / Accessories



Couplers:
- Comply with ISO 4414 and EN983 safety standards 0 - 16 bar, -20°C to 60°C.

Blowguns:
- Two connection points. Comply with OSHA and EU regulation for safe use. Up to 10 bar, -15°C to +60°C.

Accessories:
- Full nickel-plated range.

p764

Legris Ball Valves / Axial Valves



- Nickel-plated brass.
- Optimum sealing & excellent resistance.
- -20°C to 80°C, 20 to 40 bar (depending on the model).

p770

Quick connect couplings

Industrial Interchange couplings



- Single handed operation
- Nominal diameter 5 to 11 mm
- Conforms to various profiles (European standard, MIL, etc.)
- Working pressure up to 35 bar
- Low pressure drop
- Temp. range -40°C up to 200°C
- Choice of material: steel/brass/ stainless steel/thermoplastics
- Variety of different threads available on request

p773

Safety couplings



- Operated with two hands
- Conforms to ISO 4414
- Increased safety in the work place
- Working pressure up to 12 bar
- Low pressure drop
- Temp. range -40°C up to 80°C
- The design allows disconnection without rebound

p785

For further information see: www.rectus.de











Linear Actuators









P1D Pneumatic Cylinders

According to ISO 15552

*The innovative P1D, a **future-proof** generation of **ISO** cylinders.*



P1D ISO Cylinder family

The P1D series is a future-proof generation of ISO cylinders. P1D complies with the current ISO 15552 previous standard ISO 6431, VDMA 24562 installation dimension standards.
The cylinders are double-acting, magnetic as standard for use with sensors and feature a new design of air cushioning. Available in Ø32mm – Ø125mm bore size the full P1D range includes:-

P1D-S series. This series is the ultimate in ISO pneumatic cylinders and is suitable for virtually any application. Options include the tie rod design, smooth profile, ultra clean cylinders for use in the food industry and all the variants including through rod and piston rod locking versions.

P1D-B series. This series features a profile design and is the basic ISO cylinder for simple applications where no special options are required. This series is suitable for general industrial applications

All mounting and sensor options are common to all P1D cylinders.

Design Variants

P1D-S Premier Cylinders

The P1D-S series is the premier in ISO pneumatic cylinders. With various piston rod materials, seal options and supported by a full range of ISO mountings the P1D-S series is suitable for a wide range of applications.



P1D-B Basic Cylinders

The P1D-B series features a profile design and is the value line ISO cylinder for basic applications where no special options are required. This series is suitable for general industrial applications and is supported by a full range of ISO mountings.



P1D-C Ultra Clean Cylinders

This series offers an ultra clean external design of cylinders that are suitable for applications that require a clean profile. With particular design features for the food and packaging industries this product can also be used for applications on vehicles, in sawmills and bag-filling industries where a clean design is important.



P1D-C Pro Clean Cylinders

This series of clean design cylinders offers two T slots within one face of the tube allowing the possibility to add sensors. The position of the T slots can be specified on any single face using the order code key. These cylinders have a clean design but are intended for applications where sensors are required.



P1D-T Tie Rod Cylinders

The P1D-T range of tie rod cylinders is intended for use in a wide range of applications. Careful design and high quality manufacture throughout ensure long service life and optimum economy. Mounting dimensions fully in accordance with ISO 15552 (ISO 6431 and CETOP RP52P) greatly simplifies installation and world-wide interchangeability.



P1D-X High and Low Temperature Cylinders

For extreme conditions these cylinders for high and low temperatures have materials and sealing systems specially designed for their particular temperature ranges. End covers and pistons are made entirely from metal, to give optimum function at **high** or **low** temperature in combination with seals made from specially tested materials and special grease.



P1D-L Rod Locking Cylinders

P1D-L is a series of extremely compact rod lock cylinders for demanding applications. This version allows the piston rod to be locked in any position but can also be used as a brake (limits apply) thanks to the rigid design. With helical grooves on the precision clamping sleeves the locking function allows for applications where the piston rod is exposed to liquids and contamination.



Design Variants

Through Piston Rod Cylinders

All P1D cylinders in all bores, Ø32-125 mm, are available with a through rod. Cylinders with a through rod can take higher side forces thanks to the double support for the piston rod. In addition, this design makes it easier to install external position sensors.



P1D-T 3 and 4 Position Cylinders

By installing two cylinders with the same or different stroke, it is possible to build a working unit with three or four positions.
This type of unit is available as factory-fitted P1D tie-rod cylinders (P1D-T) in all bores, Ø32-125 mm. Other P1D cylinders can be flange mounted back-to-back with a standard mounting



P1D-T Tandem Cylinders

The P1D is also available as a tandem cylinder, i.e. two cylinders connected in series. This cylinder unit has almost twice the force, which is a great advantage in restricted spaces. Tandem cylinders are available as tie-rod cylinders, P1D-T, in all bores Ø32-125 mm.



P1D-V with valve built on

P1D Standard can be ordered with a factory-fitted valve and piping. The valve is the robust and compact Viking series, with product code P2L-A (for cylinder bores 32-63), P2L-B
(for cylinder bores 80-100) and P2L-D (for cylinder bore 125).



Alternative Piston Rod Materials

All P1D cylinders in all bores, Ø32-125 mm, can be ordered with the following piston rod materials:

- Steel, hard chromed
- Stainless steel, roller polished (standard)
- Acid-proof steel, roller polished
- Stainless steel, hard chromed



Operation with Dry Piston Rod

In many applications, primarily in the food industry, the cylinders are cleaned frequently. This means that the film of grease on the piston rod is washed off, which puts special demands on the materials and the design of the piston rod seal system (scraper ring and piston rod seal). A piston rod seal system specially designed for dry rod operation is available as an option for this type of application, for all bores of P1D cylinders. The system has a specially designed L-shaped seal and the material is self-lubricating, high molecular weight plastics (HDPE).



Tel: +45 63 12 83 00 | Email: ps@hymatik.com | www.hymatik.com | Hvidkaervej 27a, DK-5250 Odense SV, Denmark

P1D-S Standard Cylinders

The P1D-S series is the premier in ISO pneumatic cylinders. With various piston rod materials, seal options and supported by a full range of ISO mountings the P1D-S series is suitable for a wide range of applications.



- Available in 32 to 125 mm bores
- PUR seals for long service life
- Drop-in sensors
- Corrosion resistant design
- Magnetic piston as standard
- Lubricated with food grade grease

Operating information

Working pressure:	Max 10 bar
Seals / Temperature options	
Standard:	-20°C to +80°C
Cylinders for low pressure hydraulic operation:	Ø32-125mm
ATEX approval:	CE Ex IIGD c T4 120°C

For more information see www.parker.com/euro_pneumatic

P1D Standard

Ø32mm - (G1/8)

Stroke mm	Order code
25	P1D-S032MS-0025
40	P1D-S032MS-0040
50	P1D-S032MS-0050
80	P1D-S032MS-0080
100	P1D-S032MS-0100
125	P1D-S032MS-0125
160	P1D-S032MS-0160
200	P1D-S032MS-0200
250	P1D-S032MS-0250
320	P1D-S032MS-0320
400	P1D-S032MS-0400
500	P1D-S032MS-0500

Ø40mm - (G1/4)

Stroke mm	Order code
25	P1D-S040MS-0025
40	P1D-S040MS-0040
50	P1D-S040MS-0050
80	P1D-S040MS-0080
100	P1D-S040MS-0100
125	P1D-S040MS-0125
160	P1D-S040MS-0160
200	P1D-S040MS-0200
250	P1D-S040MS-0250
320	P1D-S040MS-0320
400	P1D-S040MS-0400
500	P1D-S040MS-0500

Ø50mm - (G1/4)

Stroke mm	Order code
25	P1D-S050MS-0025
40	P1D-S050MS-0040
50	P1D-S050MS-0050
80	P1D-S050MS-0080
100	P1D-S050MS-0100
125	P1D-S050MS-0125
160	P1D-S050MS-0160
200	P1D-S050MS-0200
250	P1D-S050MS-0250
320	P1D-S050MS-0320
400	P1D-S050MS-0400
500	P1D-S050MS-0500

Ø63mm - (G3/8)

Stroke mm	Order code
25	P1D-S063MS-0025
40	P1D-S063MS-0040
50	P1D-S063MS-0050
80	P1D-S063MS-0080
100	P1D-S063MS-0100
125	P1D-S063MS-0125
160	P1D-S063MS-0160
200	P1D-S063MS-0200
250	P1D-S063MS-0250
320	P1D-S063MS-0320
400	P1D-S063MS-0400
500	P1D-S063MS-0500

Ø80mm - (G3/8)

Stroke mm	Order code
25	P1D-S080MS-0025
40	P1D-S080MS-0040
50	P1D-S080MS-0050
80	P1D-S080MS-0080
100	P1D-S080MS-0100
125	P1D-S080MS-0125
160	P1D-S080MS-0160
200	P1D-S080MS-0200
250	P1D-S080MS-0250
320	P1D-S080MS-0320
400	P1D-S080MS-0400
500	P1D-S080MS-0500

Ø100mm - (G1/2)

Stroke mm	Order code
25	P1D-S100MS-0025
40	P1D-S100MS-0040
50	P1D-S100MS-0050
80	P1D-S100MS-0080
100	P1D-S100MS-0100
125	P1D-S100MS-0125
160	P1D-S100MS-0160
200	P1D-S100MS-0200
250	P1D-S100MS-0250
320	P1D-S100MS-0320
400	P1D-S100MS-0400
500	P1D-S100MS-0500

Ø125mm - (G1/2)

Stroke mm	Order code
25	P1D-S125MS-0025
40	P1D-S125MS-0040
50	P1D-S125MS-0050
80	P1D-S125MS-0080
100	P1D-S125MS-0100
125	P1D-S125MS-0125
160	P1D-S125MS-0160
200	P1D-S125MS-0200
250	P1D-S125MS-0250
320	P1D-S125MS-0320
400	P1D-S125MS-0400
500	P1D-S125MS-0500

The cylinders are supplied complete with a zinc plated steel piston rod nut.

Sensors



For sensors see page 77.

Tel: +45 63 12 83 00 | Email: ps@hymatik.com | www.hymatik.com | Hvidkaervej 27a, DK-5250 Odense SV, Denmark

P1D-S Series

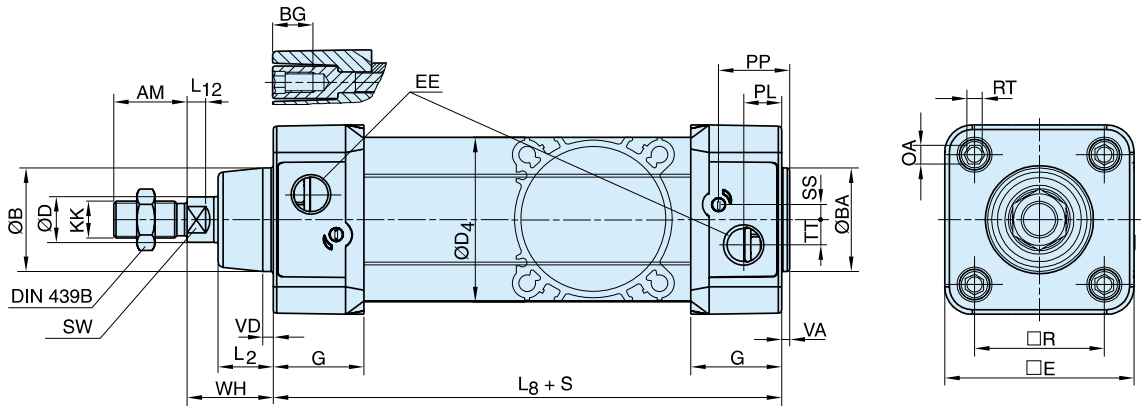

Dimensions

Cylinder bore mm	AM mm	B mm	BA mm	BG mm	D mm	D4 mm	E mm	EE mm	G mm	KK	L2 mm	L8 mm	L12 mm
32	22	30	30	16	12	45,0	50,0	G1/8	28,5	M10x1,25	16,0	94	6,0
40	24	35	35	16	16	52,0	57,4	G1/4	33,0	M12x1,25	19,0	105	6,5
50	32	40	40	16	20	60,7	69,4	G1/4	33,5	M16x1,5	24,0	106	8,0
63	32	45	45	16	20	71,5	82,4	G3/8	39,5	M16x1,5	24,0	121	8,0
80	40	45	45	17	25	86,7	99,4	G3/8	39,5	M20x1,5	30,0	128	10,0
100	40	55	55	17	25	106,7	116,0	G1/2	44,5	M20x1,5	32,4	138	14,0
125	54	60	60	20	32	134,0	139,0	G1/2	51,0	M27x2	45,0	160	18,0

Cylinder bore mm	OA mm	PL mm	PP mm	R mm	RT	SS mm	SW mm	TT mm	VA mm	VD mm	WH mm
32	6,0	13,0	21,8	32,5	M6	4,0	10	4,5	3,5	4,5	26
40	6,0	14,0	21,9	38,0	M6	8,0	13	5,5	3,5	4,5	30
50	8,0	14,0	23,0	46,5	M8	4,0	17	7,5	3,5	5,0	37
63	8,0	16,4	27,4	56,5	M8	6,5	17	11,0	3,5	5,0	37
80	6,0	16,0	30,5	72,0	M10	0	22	15,0	3,5	4,0	46
100	6,0	18,0	35,8	89,0	M10	0	22	20,0	3,5	4,0	51
125	8,0	28,0	40,5	110,0	M12	0	27	17,5	5,5	6,0	65

S=Stroke

Tolerances

Cylinder bore mm	B	BA	L_8 mm	L_9 mm	R mm	Stroke tolerance up to stroke 500 mm	Stroke tolerance for stroke over 500 mm
32	d11	d11	±0,4	±2	±0,5	+0,3/+2,0	+0,3/+3,0
40	d11	d11	±0,7	±2	±0,5	+0,3/+2,0	+0,3/+3,0
50	d11	d11	±0,7	±2	±0,6	+0,3/+2,0	+0,3/+3,0
63	d11	d11	±0,8	±2	±0,7	+0,3/+2,0	+0,3/+3,0
80	d11	d11	±0,8	±3	±0,7	+0,3/+2,0	+0,3/+3,0
100	d11	d11	±1,0	±3	±0,7	+0,3/+2,0	+0,3/+3,0
125	d11	d11	±1,0	±3	±1,1	+0,3/+2,0	+0,3/+3,0

Tel: +45 63 12 83 00 | Email: ps@hymatik.com | www.hymatik.com | Hvidkaervej 27a, DK-5250 Odense SV, Denmark

Cylinder mountings

Flange MF1/MF2



Intended for fixed mounting of cylinder. Flange can be fitted to front or rear end cover of cylinder.

Materials
Flange: Surface-treated steel
Mounting screws acc. to DIN 6912: Zinc-plated steel 8.8

Supplied complete with mounting screws for attachment to cylinder.

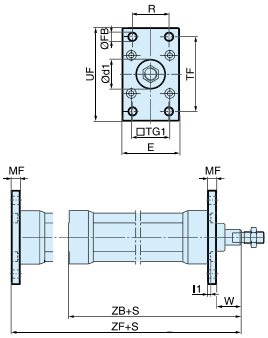

Cyl. bore mm	d1 H11 mm	FB H13 mm	TG1 mm	E mm	R JS14 mm	MF JS14 mm	TF JS14 mm	UF mm	l1 -0,5 mm	W* mm	ZF* mm	ZB* mm	Weight Kg	Order code
32	30	7	32,5	45	32	10	64	80	5,0	16	130	123,5	0,23	**P1C-4KMB**
40	35	9	38,0	52	36	10	72	90	5,0	20	145	138,5	0,28	**P1C-4LMB**
50	40	9	46,5	65	45	12	90	110	6,5	25	155	146,5	0,53	**P1C-4MMB**
63	45	9	56,5	75	50	12	100	120	6,5	25	170	161,5	0,71	**P1C-4NMB**
80	45	12	72,0	95	63	16	126	150	8,0	30	190	177,5	1,59	**P1C-4PMB**
100	55	14	89,0	115	75	16	150	170	8,0	35	205	192,5	2,19	**P1C-4QMB**
125	60	16	110,0	140	90	20	180	205	10,5	45	245	230,5	3,78	**P1C-4RMB**

S = Stroke length * Does not apply to cylinders with lock unit.

Foot brackets MS1



Intended for fixed mounting of cylinder. Foot bracket can be fitted to front and rear end covers of cylinder.

Material:
Foot bracket: Surface treated steel
Mounting screws acc. to DIN 912: Zinc-plated steel 8.8

Supplied in pairs with mounting screws for attachment to cylinder.

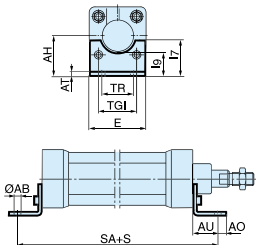

Cyl. bore mm	AB H14 mm	TG1 mm	E mm	TR JS14 mm	AO mm	AU mm	AH JS15 mm	l7 mm	AT mm	l9 JS14 mm	SA* mm	Weight Kg	Order code
32	7	32,5	45	32	10	24	32	30	4,5	17,0	142	0,06	**P1C-4KMF**
40	9	38,0	52	36	8	28	36	30	4,5	18,5	161	0,08	**P1C-4LMF**
50	9	46,5	65	45	13	32	45	36	5,5	25,0	170	0,16	**P1C-4MMF**
63	9	56,5	75	50	13	32	50	35	5,5	27,5	185	0,25	**P1C-4NMF**
80	12	72,0	95	63	14	41	63	49	6,5	40,5	210	0,50	**P1C-4PMF**
100	14	89,0	115	75	15	41	71	54	6,5	43,5	220	0,85	**P1C-4QMF**
125	16	110,0	140	90	22	45	90	71	8,0	60,0	250	1,48	**P1C-4RMF**

S = Stroke length * Does not apply to cylinders with lock unit.

Pivot bracket with rigid bearing AB7



Intended for flexible mounting of cylinder. The pivot bracket can be combined with clevis bracket MP2.

Materials
Pivot bracket: Surface-treated aluminium, black
Bearing: Sintered oil-bronze bushing

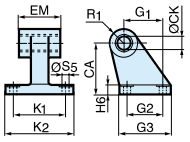

Cyl. bore mm	CK H9 mm	S5 H13 mm	K1 JS14 mm	K2 mm	G1 JS14 mm	G2 JS14 mm	EM mm	G3 mm	CA JS15 mm	H6 mm	R1 mm	Weight Kg	Order code
32	10	6,6	38	51	21	18	25,5	31	32	8	10,0	0,06	**P1C-4KMD**
40	12	6,6	41	54	24	22	27,0	35	36	10	11,0	0,08	**P1C-4LMD**
50	12	9,0	50	65	33	30	31,0	45	45	12	13,0	0,15	**P1C-4MMD**
63	16	9,0	52	67	37	35	39,0	50	50	12	15,0	0,20	**P1C-4NMD**
80	16	11,0	66	86	47	40	49,0	60	63	14	15,0	0,33	**P1C-4PMD**
100	20	11,0	76	96	55	50	59,0	70	71	15	19,0	0,49	**P1C-4QMD**
125	25	14,0	94	124	70	60	69,0	90	90	20	22,5	1,02	**P1C-4RMD**

Tel: +45 63 12 83 00 | Email: ps@hymatik.com | www.hymatik.com | Hvidkaervej 27a, DK-5250 Odense SV, Denmark

Cylinder mountings

Swivel eye bracket MP6



Intended for use together with clevis bracket GA

Material
Bracket: Surface-treated aluminium, black
Swivel bearing acc. to DIN 648K: Hardened steel

Supplied complete with mounting screws for attachment to cylinder.

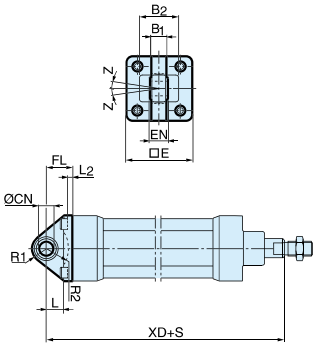

Cyl. bore mm	E mm	B1 mm	B2 mm	EN mm	R1 mm	R2 mm	FL mm	l2 mm	L mm	CN H7 mm	XD* mm	Z	Weight Kg	Order code
32	45	10,5	-	14	16	-	22	5,5	12	10	142	4°	0,08	**P1C-4KMSA**
40	52	12,0	-	16	18	-	25	5,5	15	12	160	4°	0,11	**P1C-4LMSA**
50	65	15,0	51	21	21	19	27	6,5	15	16	170	4°	0,20	**P1C-4MMSA**
63	75	15,0	-	21	23	-	32	6,5	20	16	190	4°	0,27	**P1C-4NMSA**
80	95	18,0	-	25	29	-	36	10,0	20	20	210	4°	0,52	**P1C-4PMSA**
100	115	18,0	-	25	31	-	41	10,0	25	20	230	4°	0,72	**P1C-4QMSA**
125	140	25,0	-	37	40	-	50	10,0	30	30	275	4°	1,53	**P1C-4RMSA**

S = Stroke length * Does not apply to cylinders with lock unit.

Clevis bracket MP2



Intended for flexible mounting of cylinder. Clevis bracket MP2 can be combined with clevis bracket MP4.

Materials
Clevis bracket: Surface-treated aluminium, black
Pin: Surface hardened steel
Circlips according to DIN 471: Spring steel
Mounting screws acc. to DIN 912: Zinc-plated steel 8.8

Supplied complete with mounting screws for attachment to cylinder.

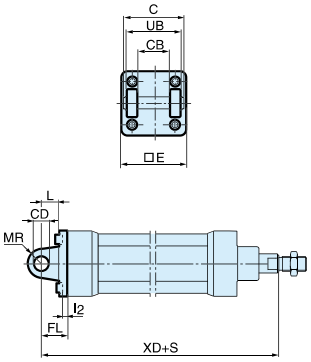

Cyl. bore mm	C mm	E mm	UB h14 mm	CB H14 mm	FL ±0,2 mm	L mm	l2 mm	CD H9 mm	MR mm	XD* mm	Weight Kg	Order code
32	53	45	45	26	22	13	5,5	10	10	142	0,08	**P1C-4KMT**
40	60	52	52	28	25	16	5,5	12	12	160	0,11	**P1C-4LMT**
50	68	65	60	32	27	16	6,5	12	12	170	0,14	**P1C-4MMT**
63	78	75	70	40	32	21	6,5	16	16	190	0,29	**P1C-4NMT**
80	98	95	90	50	36	22	10,0	16	16	210	0,36	**P1C-4PMT**
100	118	115	110	60	41	27	10,0	20	20	230	0,64	**P1C-4QMT**
125	139	140	130	70	50	30	10,0	25	25	275	1,17	**P1C-4RMT**

S = Stroke length * Does not apply to cylinders with lock unit

Tel: +45 63 12 83 00 | Email: ps@hymatik.com | www.hymatik.com | Hvidkaervej 27a, DK-5250 Odense SV, Denmark

Cylinder mountings

Clevis bracket MP4



Intended for flexible mounting of cylinder. Clevis bracket MP4 can be combined with clevis bracket MP2.

Materials
Clevis bracket: Surface-treated aluminium, black
Mounting screws acc. to DIN 912: Zinc-plated steel 8.8

Supplied complete with mounting screws for attachment to cylinder.

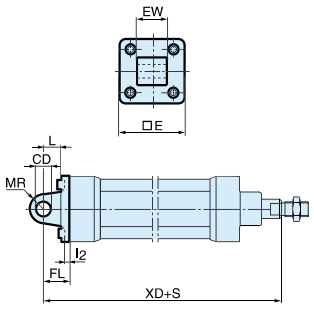

Cyl. bore mm	E mm	EW mm	FL mm	L ±0,2 mm	l2 mm	CD mm	MR H9 mm	XD* mm	Weight Kg	Order code
32	45	26	22	13	5,5	10	10	142	0,09	**P1C-4KME**
40	52	28	25	16	5,5	12	12	160	0,13	**P1C-4LME**
50	65	32	27	16	6,5	12	12	170	0,17	**P1C-4MME**
63	75	40	32	21	6,5	16	16	190	0,36	**P1C-4NME**
80	95	50	36	22	10,0	16	16	210	0,46	**P1C-4PME**
100	115	60	41	27	10,0	20	20	230	0,83	**P1C-4QME**
125	140	70	50	30	10,0	25	25	275	1,53	**P1C-4RME**

S = Stroke length * Does not apply to cylinders with lock unit.

Clevis bracket AB6



Intended for flexible mounting of cylinder. Clevis bracket GA can be combined with pivot bracket with swivel bearing, swivel eye bracket and swivel rod eye.

Materials
Clevis bracket: Surface-treated aluminium
Pin: Surface hardened steel
Locking pin: Spring steel
Circlips according to DIN 471: Spring steel
Mounting screws acc. to DIN 912: Zinc-plated steel 8.8

Supplied complete with mounting screws for attachment to cylinder.

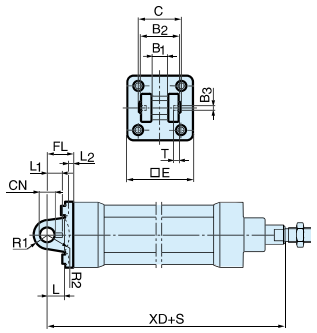

Cyl. bore mm	C mm	E mm	B2 d12 mm	B1 H14 mm	T mm	B3 mm	R2 mm	L1 mm	FL ±0,2 mm	l2 mm	L mm	CN F7 mm	R1 mm	XD* mm	Weight Kg	Order code
32	41	45	34	14	3	3,3	17	11,5	22	5,5	12	10	11	142	0,09	**P1C-4KMCA**
40	48	52	40	16	4	4,3	20	12,0	25	5,5	15	12	13	160	0,13	**P1C-4LMCA**
50	54	65	45	21	4	4,3	22	14,0	27	6,5	17	16	18	170	0,17	**P1C-4MMCA**
63	60	75	51	21	4	4,3	25	14,0	32	6,5	20	16	18	190	0,36	**P1C-4NMCA**
80	75	95	65	25	4	4,3	30	16,0	36	10,0	20	20	22	210	0,58	**P1C-4PMCA**
100	85	115	75	25	4	4,3	32	16,0	41	10,0	25	20	22	230	0,89	**P1C-4QMCA**
125	110	140	97	37	6	6,3	42	24,0	50	10,0	30	30	30	275	1,75	**P1C-4RMCA**

S = Stroke length * Does not apply to cylinders with lock unit.

Stainless steel Pin Set AB6

Cyl. bore mm	Weight Kg	Order code
32	0,05	**9301054311**
40	0,06	**9301054312**
50	0,07	**9301054313**
63	0,07	**9301054314**
80	0,17	**9301054315**
100	0,31	**9301054316**
125	0,54	**9301054317**

Materials
Pin: Stainless steel
Locking pin: Stainless steel
Circlips according to DIN 471: Stainless steel

Tel: +45 63 12 83 00 | Email: ps@hymatik.com | www.hymatik.com | Hvidkaervej 27a, DK-5250 Odense SV, Denmark

Cylinder mountings

Pivot bracket with swivel bearing CS7



Intended for use together with clevis bracket GA.

Material
Pivot bracket: Surface-treated steel, black
Swivel bearing acc. to DIN 648K: Hardened steel

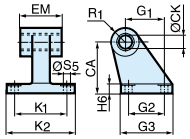

Cyl. bore mm	CN H7 mm	S5 H13 mm	K1 JS14 mm	K2 mm	EU mm	G1 JS14 mm	G2 JS14 mm	EN mm	G3 mm	CH JS15 mm	H6 mm	ER mm	Z	Weight Kg	Order code
32	10	6,6	38	51	10,5	21	18	14	31	32	10	16	4°	0,18	**P1C-4KMA**
40	12	6,6	41	54	12,0	24	22	16	35	36	10	18	4°	0,25	**P1C-4LMA**
50	16	9,0	50	65	15,0	33	30	21	45	45	12	21	4°	0,47	**P1C-4MMA**
63	16	9,0	52	67	15,0	37	35	21	50	50	12	23	4°	0,57	**P1C-4NMA**
80	20	11,0	66	86	18,0	47	40	25	60	63	14	28	4°	1,05	**P1C-4PMA**
100	20	11,0	76	96	18,0	55	50	25	70	71	15	30	4°	1,42	**P1C-4QMA**
125	30	14,0	94	124	25,0	70	60	37	90	90	20	40	4°	3,10	**P1C-4RMA**

3 and 4 positions flange JP1



Mounting kit for back to back mounted cylinders, 3 and 4 position cylinders.

Material:
Mounting: Aluminium
Mounting screws: Zinc-plated steel 8.8

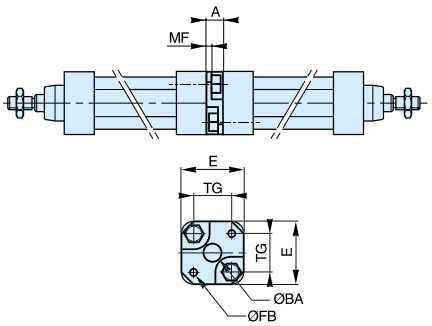

Cyl. bore mm	E mm	TG mm	ØFB mm	MF mm	A mm	ØBA mm	Weight Kg	Order code
32	50	32,5	6,5	5	16	30	0,060	**P1E-6KB0**
40	60	38,0	6,5	5	16	35	0,078	**P1E-6LB0**
50	66	46,5	8,5	6	20	40	0,162	**P1E-6MB0**
63	80	56,5	8,5	6	20	45	0,194	**P1E-6NB0**
80	100	72,0	10,5	8	25	45	0,450	**P1E-6PB0**
100	118	89,0	10,5	8	25	55	0,672	**P1E-6QB0**

Pivot brackets AT4 for MT*



Intended for use together with trunnion MT4, MT5 and MT6.

Material
Pivot bracket: Surface-treated aluminium
Bearing acc. to DIN 1850 C: Sintered oil-bronze bushing

Supplied in pairs.

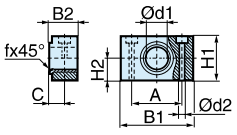

Cyl. bore mm	B1 mm	B2 mm	A mm	C mm	d1 mm	d2 H13 mm	H1 mm	H2 mm	fx45° min mm	Weight Kg	Order code
32	46	18,0	32	10,5	12	6,6	30	15	1,0	0,04*	**9301054261**
40	55	21,0	36	12,0	16	9,0	36	18	1,6	0,07*	**9301054262**
50	55	21,0	36	12,0	16	9,0	36	18	1,6	0,07*	**9301054262**
63	65	23,0	42	13,0	20	11,0	40	20	1,6	0,12*	**9301054264**
80	65	23,0	42	13,0	20	11,0	40	20	1,6	0,12*	**9301054264**
100	75	28,5	50	16,0	25	14,0	50	25	2,0	0,21*	**9301054266**
125	75	28,5	50	16,0	25	14,0	50	25	2,0	0,21*	**9301054266**

Tel: +45 63 12 83 00 | Email: ps@hymatik.com | www.hymatik.com | Hvidkaervej 27a, DK-5250 Odense SV, Denmark

Cylinder mountings

Intermediate trunnion MT4 for P1D-S



Intended for articulated mounting of cylinder. This mounting is available for P1D-S and P1D-T.
The trunnion is factory-fitted in the centre of the cylinder or at an optional location specified by the XV-measure – Combined with pivot brackets AT4.
Material:
Trunnion: zinc plated steel

Intermediate trunnion MT4 for P1D-T



Trunnion centred
The central trunnion for the P1D-S and P1D-T is ordered with letter D in position 17 and NNN in positions 18-20.

Trunnion with optional location
The trunnion for the P1D-S and P1D-T is ordered with letter G in position 17 and desired XV-measure (3-digit measure in mm) in positions 18-20.

Free trunnion
P1D-S can also be ordered with the trunnion loosely fitted to the cylinder (not fixed in position). This allows the position to be established at the time of installation.
Ordered with letter G in position 17 and 000 in positions 18-20.

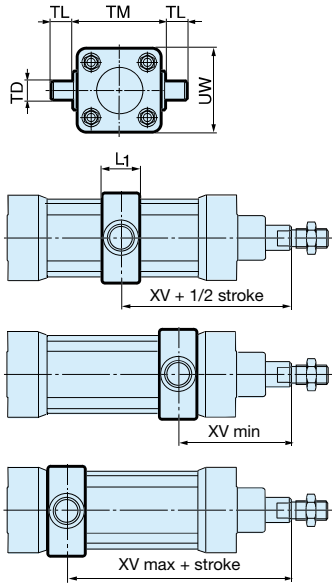

Cyl. bore mm	L1		TL	TM	Ø TD	UW	XV min				XV				XV max			
	P1D-S/L/H mm	P1D-T mm	h14 mm	h14 mm	e9 mm	P1D-S/L/H mm	P1D-S mm	P1D-T mm	P1D-L mm	P1D-H mm	P1D-S mm	P1D-T mm	P1D-L mm	P1D-H mm	P1D-S mm	P1D-T mm	P1D-L mm	P1D-H mm
32	18	15	12	50	12	52	63,5	62,0	119,5	111,5	73,0	73,0	129,0	121,0	82,5	84,0	138,5	130,5
40	20	20	16	63	16	59	73,0	73,0	133,5	128,0	82,5	82,5	143,0	137,5	92,0	92,0	152,5	147,0
50	20	20	16	75	16	71	80,5	80,5	143,5	150,5	90,0	90,0	153,0	160,0	99,5	99,5	162,5	169,5
63	26	25	20	90	20	84	89,5	89,0	168,5	159,5	97,5	97,5	176,5	167,5	106,0	105,5	184,5	175,5
80	26	25	20	110	20	105	98,5	98,0	188,5	188,5	110,0	110,0	200,0	200,0	122,0	121,5	211,5	211,5
100	32	30	25	132	25	129	111,5	110,5	223,5	203,5	120,0	120,0	232,0	212,0	129,5	128,5	240,5	220,5
125	33	32	25	180	25	159	132,5	132,0	250.0	254,5	145,0	145,0	262,5	267,0	158,0	157,5	275,0	279,5

Important: If the cylinder is ordered with a piston rod protusion (WH dimension), please add this extra length to XVmin, XV and XVmax.

Flange mounted trunnion MT5/MT6



Intended for articulated mounting of cylinder. This trunnion can be flange mounted on the front or rear end cover of all P1D cylinders. At your choice, you can order a complete cylinder with factory-fitted flange mounted trunnion Individual trunnions have order code as shown below.

Material:
Trunnion: zinc plated steel
Screws: zinc plated steel, 8.8

Delivered complete with mounting screws for attachment to the cylinder

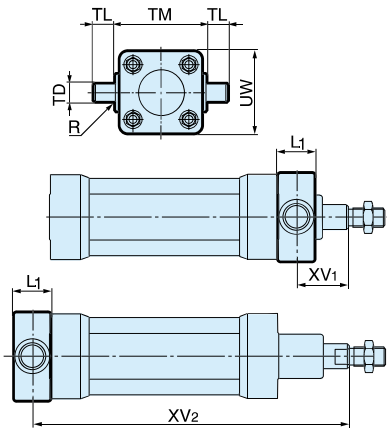

Cyl. bore mm	TM h14 mm	TL h14 mm	TD e9 mm	R mm	UW mm	L1 mm	XV_1* mm	X* mm	Y mm	Weight Kg	Order code
32	50	12	12	1,0	46	14	19,5	126,5	11	0,17	**P1D-4KMYF**
40	63	16	16	1,6	59	19	21,0	144,0	14	0,43	**P1D-4LMYF**
50	75	16	16	1,6	69	19	28,0	152,0	20	0,55	**P1D-4MMYF**
63	90	20	20	1,6	84	24	25,5	169,5	20	1,10	**P1D-4NMYF**
80	110	20	20	1,6	102	24	34,5	185,5	26	1,66	**P1D-4PMYF**
100	132	25	25	2,0	125	29	37,0	203,0	31	3,00	**P1D-4QMYF**

XV_2 = X +Stroke length * Does not apply to cylinders with lock unit.

To fit a flange mounted trunnion at the front end cover of a P1D cylinder with lock unit, the piston rod must be extended. This is to provide the same WH dimensions as for the P1D base cylinder with dimension Y.

Parker Hannifin Corporation
Pneumatic Division - Europe

Tel: +45 63 12 83 00 | Email: ps@hymatik.com | www.hymatik.com | Hvidkaervej 27a, DK-5250 Odense SV, Denmark

Piston rod mountings

Swivel rod eye AP6

Intended for articulated mounting of the cylinder.



Material:
Swivel rod eye, nut: galvanized steel.
Swivel bearing according to DIN 648K: Hardened steel.

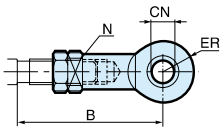

Stainless steel swivel rod eye AP6

Stainless-steel swivel rod eye for articulated mounting of eye cylinder.



Materials
Swivel rod eye: Stainless steel
Swivel bearing according to DIN 648K: Stainless steel
Use stainless steel nut with stainless steel swivel rod eye.

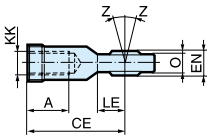

Cyl.-dia. mm	A mm	B min mm	B max mm	CE mm	CN H9 mm	EN h12 mm	ER mm	KK	LE	N* min mm	O mm	Z mm	Weight kg	Order code Galvanised Steel	Order code Stainless Steel
32	20	48,0	55	43	10	14	14	M10x1,25	15	17	10,5	12°	0,08	**P1C-4KRS**	**P1S-4JRT**
40	22	56,0	62	50	12	16	16	M12x1,25	17	19	12,0	12°	0,12	**P1C-4LRS**	**P1S-4LRT**
50	28	72,0	80	64	16	21	21	M16x1,5	22	22	15,0	15°	0,25	**P1C-4MRS**	**P1S-4MRT**
63	28	72,0	80	64	16	21	21	M16x1,5	22	22	15,0	15°	0,25	**P1C-4MRS**	**P1S-4MRT**
80	33	87,0	97	77	20	25	25	M20x1,5	26	32	18,0	15°	0,46	**P1C-4PRS**	**P1S-4PRT**
100	33	87,0	97	77	20	25	25	M20x1,5	26	32	18,0	15°	0,46	**P1C-4PRS**	**P1S-4PRT**
125	51	123,5	137	110	30	37	35	M27x2	36	41	25,0	15°	1,28	**P1C-4RRS**	**P1S-4RRT**

Clevis AP2

Intended for articulated mounting of the cylinder.



Material:
Clevis and clip galvanized steel.
Pin: Hardened steel

Supplied complete with axle.

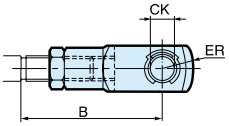

Stainless steel Clevis AP2

Stainless-steel clevis for articulated mounting of cylinder.



Material
Clevis: Stainless steel
Pin: Stainless steel
Circlips according to DIN 471: Stainless steel
Use stainless steel nut with stainless steel swivel rod eye.

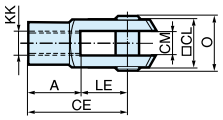

Cyl.-dia. mm	A mm	B min mm	B max mm	CE mm	CK h11/E9 mm	CL mm	CM mm	ER mm	KK	LE mm	O mm	Weight kg	Order code Galvanised Steel	Order code Stainless Steel
32	20	45,0	52	40	10	20	10	16	M10x1,25	20	28,0	0,09	**P1C-4KRC**	**P1S-4JRD**
40	24	54,0	60	48	12	24	12	19	M12x1,25	24	32,0	0,15	**P1C-4LRC**	**P1S-4LRD**
50	32	72,0	80	64	16	32	16	25	M16x1,5	32	41,5	0,35	**P1C-4MRC**	**P1S-4MRD**
63	32	72,0	80	64	16	32	16	25	M16x1,5	32	41,5	0,35	**P1C-4MRC**	**P1S-4MRD**
80	40	90,0	100	80	20	40	20	32	M20x1,5	40	50,0	0,75	**P1C-4PRC**	**P1S-4PRD**
100	40	90,0	100	80	20	40	20	32	M20x1,5	40	50,0	0,75	**P1C-4PRC**	**P1S-4PRD**
125	56	123,5	137	110	30	55	30	45	M27x2,0	54,0	72,0	2,10	**P1C-4RRC**	**P1S-4RRD**

Tel: +45 63 12 83 00 | Email: ps@hymatik.com | www.hymatik.com | Hvidkaervej 27a, DK-5250 Odense SV, Denmark

Piston rod mountings

Flexo coupling PM5



Flexo coupling for articulated mounting of piston rod. Flexo fitting is intended to take up axial angle errors within a range of ±4°.

Material
Flexo coupling, nut: Zinc-plated steel

Supplied complete with galvanized adjustment nut.

Cyl. bore Ø mm	Weight kg	Order code
32	0,23	**P1C-4KRF**
40	0,23	**P1C-4LRF**
50	0,65	**P1C-4MRF**
63	0,65	**P1C-4MRF**
80	0,71	**P1C-4PRF**
100	0,71	**P1C-4PRF**
125	1,60	**P1C-4RRF**

Cyl. bore mm	KK mm	B mm	C mm	D mm	E mm	ØF mm	SW1 mm	SW2 mm	SW3 mm	SW4 mm	SW5 mm
32	M10x1.25	20	23	73	31	21	12	30	30	19	17
40	M12x1.25	24	23	77	31	21	12	30	30	19	19
50	M16x1.5	32	32	108	45	33.5	19	41	41	30	24
63	M16x1.5	32	32	108	45	33.5	19	41	41	30	24
80	M20x1.5	40	42	122	56	33.5	19	41	41	30	30
100	M20x1.5	40	42	122	56	33.5	19	41	41	30	30
125	M27x2	54	48	147	51	39	24	55	55	32	41

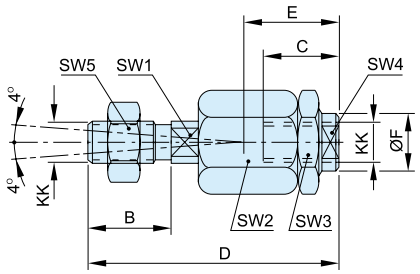

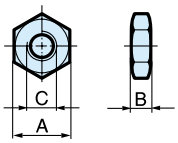

Nut MR9



Intended for fixed mounting of accessories to the piston rod.
Material: Zinc-plated steel

All P1D cylinders are delivred with a zinc-plated steel piston
rod nut, except P1D Ultra Clean, which is delivered with a stainless steel piston rod nut instead.

Stainless steel nut MR9



Intended for fixed mounting of accessories to the piston rod.

Material: Stainless steel A2

All P1D cylinders are delivred with a zinc-plated steel piston rod nut, except P1D Ultra Clean, which is delivered with a stainless steel piston rod nut instead.

Acid-proof nut MR9



Intended for fixed mounting of accessories to the piston rod.

Material: Acid-proof steel A4

Cylinders with acid-proof piston rod are supplied with nut of acid-proof steel

Cyl. bore mm	A mm	B mm	C	Weight Kg	Order code
32	17	5,0	M10x1,25	0,007	**P14-4KRPZ**
40	19	6,0	M12x1,25	0,010	**P14-4LRPZ**
50	24	8,0	M16x1,5	0,021	**P14-4MRPZ**
63	24	8,0	M16x1,5	0,021	**P14-4MRPZ**
80	30	10,0	M20x1,5	0,040	**P14-4PRPZ**
100	30	10,0	M20x1,5	0,040	**P14-4PRPZ**
125	30	10,0	M27x2	0,100	**P14-4RRPZ**
32	17	5,0	M10x1,25	0,007	**P14-4KRPS**
40	19	6,0	M12x1,25	0,010	**P14-4LRPS**
50	24	8,0	M16x1,5	0,021	**P14-4MRPS**
63	24	8,0	M16x1,5	0,021	**P14-4MRPS**
80	30	10,0	M20x1,5	0,040	**P14-4PRPS**
100	30	10,0	M20x1,5	0,040	**P14-4PRPS**
125	30	10,0	M27x2	0,100	**P14-4RRPS**
32	17	5,0	M10x1,25	0,007	**P14-4KRPX**
40	19	6,0	M12x1,25	0,010	**P14-4LRPX**
50	24	8,0	M16x1,5	0,021	**P14-4MRPX**
63	24	8,0	M16x1,5	0,021	**P14-4MRPX**
80	30	10,0	M20x1,5	0,040	**P14-4PRPX**
100	30	10,0	M20x1,5	0,040	**P14-4PRPX**
125	30	10,0	M27x2	0,100	**P14-4RRPX**

Supplied as pack of 10 off, Weight per item

Sealing plugs



Set of 4 threaded plugs to be fitted in unused end cover screws.
A rubber gasket is supplied with every plug. The seal off function is equal to IP67. The plugs can be used for all P1D cylinders to avoid collecting dirt and fluids in the end cover screw recesses.

Material:
Plug Polyamid PA
Gasket Nitrile rubber

Supplied as pack of 4 off, Weight per item

Cyl.	Weight Kg	Order code
32	0,01	**460104801**
40	0.01	**460104801**
50	0.02	**460104802**
63	0,02	**460104802**
80	0,02	**460104803**
100	0,02	**460104803**
125	0,03	**460104804**

	Flange MF1/MF2 [1]	Foot brackets MS1 [2]	Pivot bracket with rigid bearing AB7 [3]	Swivel eye bracket MP6 [4]	Clevis bracket MP2 [5]
					
Ø 32	P1C-4KMB	P1C-4KMF	P1C-4KMD	P1C-4KMSA	P1C-4KMT
Ø 40	P1C-4LMB	P1C-4LMF	P1C-4LMD	P1C-4LMSA	P1C-4LMT
Ø 50	P1C-4MMB	P1C-4MMF	P1C-4MMD	P1C-4MMSA	P1C-4MMT
Ø 63	P1C-4NMB	P1C-4NMF	P1C-4NMD	P1C-4NMSA	P1C-4NMT
Ø 80	P1C-4PMB	P1C-4PMF	P1C-4PMD	P1C-4PMSA	P1C-4PMT
Ø 100	P1C-4QMB	P1C-4QMF	P1C-4QMD	P1C-4QMSA	P1C-4QMT
Ø 125	P1C-4RMB	P1C-4RMF	P1C-4RMD	P1C-4RMSA	P1C-4RMT

	Clevis bracket MP4 [6]	Clevis bracket AB6 [7]	Pivot bracket with swivel bearing CS7 [8]	3 and 4 positions flange JP1	Pivot brackets AT4 [10] for MT* trunnion
					
Ø 32	P1C-4KME	P1C-4KMCA	P1C-4KMA	P1E-6KB0	9301054261
Ø 40	P1C-4LME	P1C-4LMCA	P1C-4LMA	P1E-6LB0	9301054262
Ø 50	P1C-4MME	P1C-4MMCA	P1C-4MMA	P1E-6MB0	9301054262
Ø 63	P1C-4NME	P1C-4NMCA	P1C-4NMA	P1E-6NB0	9301054264
Ø 80	P1C-4PME	P1C-4PMCA	P1C-4PMA	P1E-6PB0	9301054264
Ø 100	P1C-4QME	P1C-4QMCA	P1C-4QMA	P1E-6QB0	9301054266
Ø 125	P1C-4RME	P1C-4RMCA	P1C-4RMA		9301054266

	Flange trunnion [11] MT5/MT6	Trunnion MT4 [12]	Swivel rod eye AP6 [13]	Clevis AP2 [14]	Flexo coupling PM5 [15]
					
Ø 32	P1D-4KMYF	Factory fitted	P1C-4KRS	P1C-4KRC	P1C-4KRF
Ø 40	P1D-4LMYF	Factory fitted	P1C-4LRS	P1C-4LRC	P1C-4LRF
Ø 50	P1D-4MMYF	Factory fitted	P1C-4MRS	P1C-4MRC	P1C-4MRF
Ø 63	P1D-4NMYF	Factory fitted	P1C-4MRS	P1C-4MRC	P1C-4MRF
Ø 80	P1D-4PMYF	Factory fitted	P1C-4PRS	P1C-4PRC	P1C-4PRF
Ø 100	P1D-4QMYF	Factory fitted	P1C-4PRS	P1C-4PRC	P1C-4PRF
Ø 125		Factory fitted	P1C-4RRS	P1C-4RRC	P1C-4RRF

	Zinc-plated steel nut MR9 (pack of 10)
	
Ø 32	P14-4KRPZ
Ø 40	P14-4LRPZ
Ø 50	P14-4MRPZ
Ø 63	P14-4MRPZ
Ø 80	P14-4PRPZ
Ø 100	P14-4PRPZ
Ø 125	P14-4RRPZ

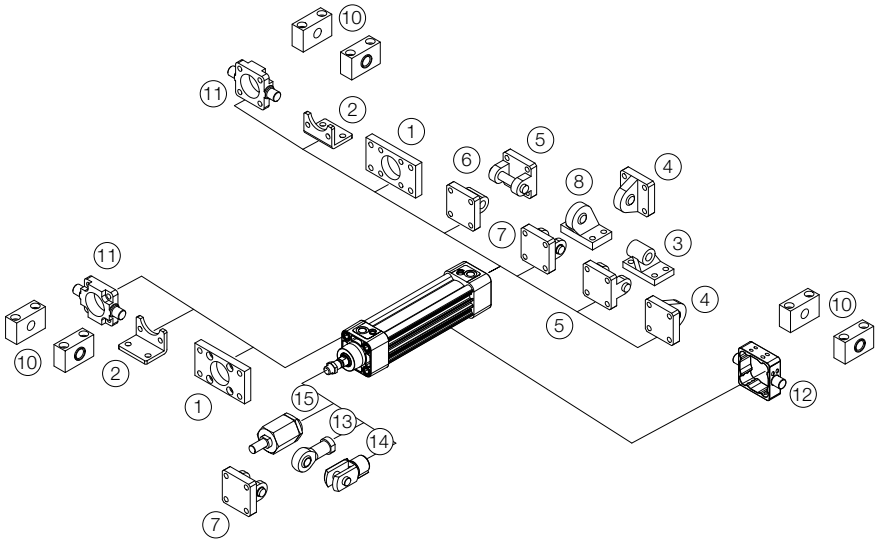

Tel: +45 63 12 83 00 | Email: ps@hymatik.com | www.hymatik.com | Hvidkaervej 27a, DK-5250 Odense SV, Denmark



P1D-B Pneumatic Cylinders

According to ISO 15552



P1D-B series. This series features a profile design and is the basic ISO cylinder for simple applications where no special options are required. This series is suitable for general industrial applications

- Available in 32 to 125 mm bores
- PUR seals for long service life
- Drop-in sensors
- Corrosion resistant design
- Magnetic piston as standard
- Lubricated with food grade grease

Tel: +45 63 12 83 00 | Email: ps@hymatik.com | www.hymatik.com | Hvidkaervej 27a, DK-5250 Odense SV, Denmark

P1D-B Basic Cylinders

The P1D-B series features a profile design and is the value line ISO cylinder for basic applications where no special options are required. This series is suitable for general industrial applications and is supported by a full range of ISO mountings.



- Available in 32 to 125 mm bores
- PUR seals for long service life
- Drop-in sensors
- Corrosion resistant design
- Magnetic piston as standard
- Lubricated with food grade grease

Operating information

Working pressure:	Max 10 bar
Standard Temperature	-20°C to +80°C

For more information see www.parker.com/euro_pneumatic

P1D-B Basic

Ø32mm - (G1/8)

Stroke mm	Order code
25	P1D-B032MS-0025
40	P1D-B032MS-0040
50	P1D-B032MS-0050
80	P1D-B032MS-0080
100	P1D-B032MS-0100
125	P1D-B032MS-0125
160	P1D-B032MS-0160
200	P1D-B032MS-0200
250	P1D-B032MS-0250
320	P1D-B032MS-0320
400	P1D-B032MS-0400
500	P1D-B032MS-0500

Ø40mm - (G1/4)

Stroke mm	Order code
25	P1D-B040MS-0025
40	P1D-B040MS-0040
50	P1D-B040MS-0050
80	P1D-B040MS-0080
100	P1D-B040MS-0100
125	P1D-B040MS-0125
160	P1D-B040MS-0160
200	P1D-B040MS-0200
250	P1D-B040MS-0250
320	P1D-B040MS-0320
400	P1D-B040MS-0400
500	P1D-B040MS-0500

Ø50mm - (G1/4)

Stroke mm	Order code
25	P1D-B050MS-0025
40	P1D-B050MS-0040
50	P1D-B050MS-0050
80	P1D-B050MS-0080
100	P1D-B050MS-0100
125	P1D-B050MS-0125
160	P1D-B050MS-0160
200	P1D-B050MS-0200
250	P1D-B050MS-0250
320	P1D-B050MS-0320
400	P1D-B050MS-0400
500	P1D-B050MS-0500

Ø63mm - (G3/8)

Stroke mm	Order code
25	P1D-B063MS-0025
40	P1D-B063MS-0040
50	P1D-B063MS-0050
80	P1D-B063MS-0080
100	P1D-B063MS-0100
125	P1D-B063MS-0125
160	P1D-B063MS-0160
200	P1D-B063MS-0200
250	P1D-B063MS-0250
320	P1D-B063MS-0320
400	P1D-B063MS-0400
500	P1D-B063MS-0500

Ø80mm - (G3/8)

Stroke mm	Order code
25	P1D-B080MS-0025
40	P1D-B080MS-0040
50	P1D-B080MS-0050
80	P1D-B080MS-0080
100	P1D-B080MS-0100
125	P1D-B080MS-0125
160	P1D-B080MS-0160
200	P1D-B080MS-0200
250	P1D-B080MS-0250
320	P1D-B080MS-0320
400	P1D-B080MS-0400
500	P1D-B080MS-0500

Ø100mm - (G1/2)

Stroke mm	Order code
25	P1D-B100MS-0025
40	P1D-B100MS-0040
50	P1D-B100MS-0050
80	P1D-B100MS-0080
100	P1D-B100MS-0100
125	P1D-B100MS-0125
160	P1D-B100MS-0160
200	P1D-B100MS-0200
250	P1D-B100MS-0250
320	P1D-B100MS-0320
400	P1D-B100MS-0400
500	P1D-B100MS-0500

Ø125mm - (G1/2)

Stroke mm	Order code
25	P1D-B125MS-0025
40	P1D-B125MS-0040
50	P1D-B125MS-0050
80	P1D-B125MS-0080
100	P1D-B125MS-0100
125	P1D-B125MS-0125
160	P1D-B125MS-0160
200	P1D-B125MS-0200
250	P1D-B125MS-0250
320	P1D-B125MS-0320
400	P1D-B125MS-0400
500	P1D-B125MS-0500

The cylinders are supplied complete with a zinc plated steel piston rod nut.

Sensors



For sensors see page 77.

Tel: +45 63 12 83 00 | Email: ps@hymatik.com | www.hymatik.com | Hvidkaervej 27a, DK-5250 Odense SV, Denmark

P1D-B Series

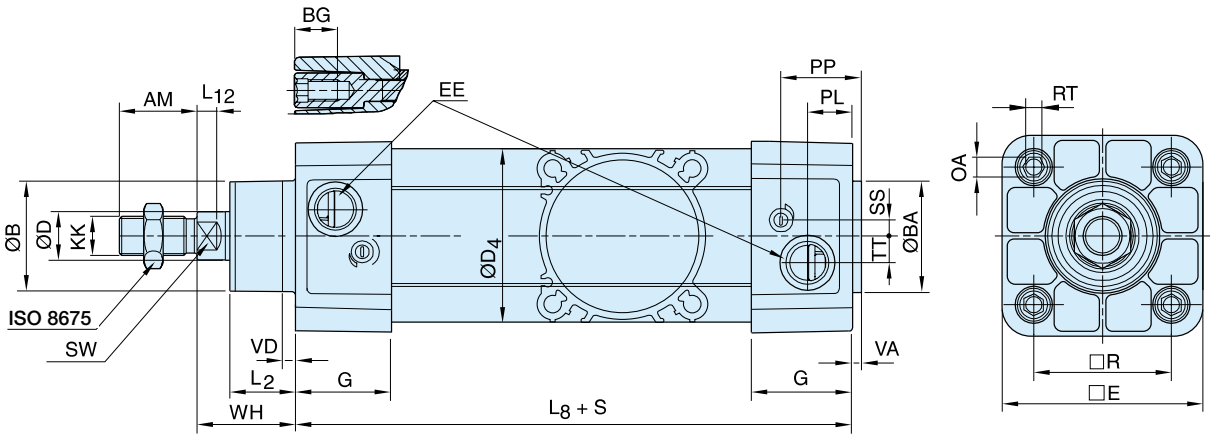

Dimensions

Cylinder bore mm	AM mm	B mm	BA mm	BG mm	D mm	D4 mm	E mm	EE mm	G mm	KK	L2 mm	L8 mm	L12 mm
32	22	30	30	16	12	45,0	48,0	G1/8	28,5	M10x1,25	16,8	94	6,0
40	24	35	35	16	16	52,0	53,5	G1/4	33,0	M12x1,25	19,0	105	6,5
50	32	40	40	16	20	60,7	65,2	G1/4	33,5	M16x1,5	24,0	106	8,0
63	32	45	45	16	20	71,5	75,5	G3/8	39,5	M16x1,5	24,3	121	8,0
80	40	45	45	17	25	86,7	95,0	G3/8	39,5	M20x1,5	30,0	128	10,0
100	40	55	55	17	25	106,7	114,0	G1/2	44,5	M20x1,5	34,0	138	14,0
125	54	60	60	20	32	134,0	139,0	G1/2	51,0	M27x2	45,0	160	18,0

Cylinder bore mm	OA mm	PL mm	PP mm	R mm	RT	SS mm	SW mm	TT mm	VA mm	VD mm	WH mm
32	6,0	14,0	24,2	32,5	M6	5,5	10	4,2	3,5	4,5	26
40	6,0	16,0	27,5	38,0	M6	8,0	13	5,5	3,5	4,5	30
50	8,0	14,0	29,3	46,5	M8	9,0	17	7,5	3,5	4,5	37
63	8,0	16,6	30,8	56,5	M8	6,5	17	10,0	3,5	4,5	37
80	6,0	16,8	33,5	72,0	M10	0	22	11,5	3,5	4,5	46
100	6,0	20,5	37,5	89,0	M10	0	22	14,5	3,5	4,5	51
125	8,0	23,3	45,8	110,0	M12	0	27	15,0	5,5	6,5	65

S=Stroke

Tolerances

Cylinder bore mm	B	BA	L_8 mm	L_9 mm	R mm	Stroke tolerance up to stroke 500 mm	Stroke tolerance for stroke over 500 mm
32	d11	d11	±0,4	±2	±0,5	+0,3/+2,0	+0,3/+3,0
40	d11	d11	±0,7	±2	±0,5	+0,3/+2,0	+0,3/+3,0
50	d11	d11	±0,7	±2	±0,6	+0,3/+2,0	+0,3/+3,0
63	d11	d11	±0,8	±2	±0,7	+0,3/+2,0	+0,3/+3,0
80	d11	d11	±0,8	±3	±0,7	+0,3/+2,0	+0,3/+3,0
100	d11	d11	±1,0	±3	±0,7	+0,3/+2,0	+0,3/+3,0
125	d11	d11	±1,0	±3	±1,1	+0,3/+2,0	+0,3/+3,0

Tel: +45 63 12 83 00 | Email: ps@hymatik.com | www.hymatik.com | Hvidkaervej 27a, DK-5250 Odense SV, Denmark

Cylinder mountings

Flange MF1/MF2



Intended for fixed mounting of cylinder. Flange can be fitted to front or rear end cover of cylinder.

Materials
Flange: Surface-treated steel
Mounting screws acc. to DIN 6912: Zinc-plated steel 8.8

Supplied complete with mounting screws for attachment to cylinder.

Cyl. bore Ø mm	Weight kg	Order code
32	0,23	**P1C-4KMB**
40	0,28	**P1C-4LMB**
50	0,53	**P1C-4MMB**
63	0,71	**P1C-4NMB**
80	1,59	**P1C-4PMB**
100	2,19	**P1C-4QMB**
125	3,78	**P1C-4RMB**

Cyl. bore mm	d1 H11 mm	FB H13 mm	TG1 mm	E mm	R JS14 mm	MF JS14 mm	TF JS14 mm	UF mm	l1 -0,5 mm	W mm	ZF mm	ZB mm
32	30	7	32,5	45	32	10	64	80	5,0	16	130	123,5
40	35	9	38,0	52	36	10	72	90	5,0	20	145	138,5
50	40	9	46,5	65	45	12	90	110	6,5	25	155	146,5
63	45	9	56,5	75	50	12	100	120	6,5	25	170	161,5
80	45	12	72,0	95	63	16	126	150	8,0	30	190	177,5
100	55	14	89,0	115	75	16	150	170	8,0	35	205	192,5
125	60	16	110,0	140	90	20	180	205	10,5	45	245	230,5

S = Stroke length

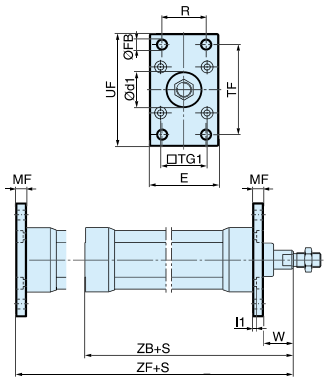

Foot brackets MS1



Intended for fixed mounting of cylinder. Foot bracket can be fitted to front and rear end covers of cylinder.

Material:
Foot bracket: Surface treated steel
Mounting screws acc. to DIN 912: Zinc-plated steel 8.8

Supplied in pairs with mounting screws for attachment to cylinder.

Cyl. bore Ø mm	Weight kg	Order code
32	0,06**	**P1C-4KMF**
40	0,08**	**P1C-4LMF**
50	0,16**	**P1C-4MMF**
63	0,25**	**P1C-4NMF**
80	0,50**	**P1C-4PMF**
100	0,85**	**P1C-4QMF**
125	1,48**	**P1C-4RMF**

** Weight per item

Cyl. bore mm	AB H14 mm	TG1 mm	E mm	TR JS14 mm	AO mm	AU mm	AH JS15 mm	l7 mm	AT mm	l9 JS14 mm	SA mm
32	7	32,5	47	32	8	24	32	30	4,5	17,0	142
40	9	38,0	53	36	10	28	36	30	4,5	18,5	161
50	9	46,5	65	45	10	32	45	36	5,5	25,0	170
63	9	56,5	75	50	10	32	50	35	5,5	27,5	185
80	12	72,0	95	63	14	41	63	49	6,5	40,5	210
100	14	89,0	115	75	15	41	71	54	6,5	43,5	220
125	16	110,0	140	90	20	45	90	71	8,0	60,0	250

S = Stroke length

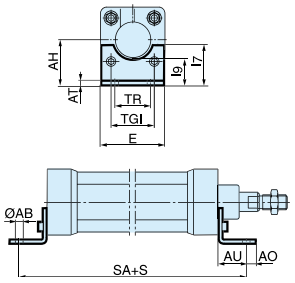

Pivot bracket with rigid bearing AB7



Intended for flexible mounting of cylinder. The pivot bracket can be combined with clevis bracket MP2.

Material:
Pivot bracket: Aluminium
Bearing: Sintered oil-bronze bushing

Cyl. bore Ø mm	Weight kg	Order code
32	0,06	**P1C-4KMDB**
40	0,08	**P1C-4LMDB**
50	0,15	**P1C-4MMDB**
63	0,20	**P1C-4NMDB**
80	0,33	**P1C-4PMDB**
100	0,49	**P1C-4QMDB**
125	1,02	**P1C-4RMDB**

Cyl. bore mm	CK H9 mm	S5 H13 mm	K1 JS14 mm	K2 mm	G1 JS14 mm	G2 JS14 mm	EM mm	G3 mm	CA JS15 mm	H6 mm	R1 mm
32	10	6,6	38	51	21	18	25,5	31	32	8	10,0
40	12	6,6	41	54	24	22	27,0	35	36	10	11,0
50	12	9,0	50	65	33	30	31,0	45	45	12	13,0
63	16	9,0	52	67	37	35	39,0	50	50	12	15,0
80	16	11,0	66	86	47	40	49,0	60	63	14	15,0
100	20	11,0	76	96	55	50	59,0	70	71	15	19,0
125	25	14,0	94	124	70	60	69,0	90	90	20	22,5

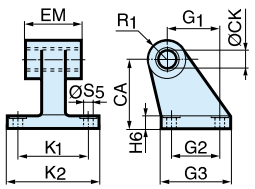

Tel: +45 63 12 83 00 | Email: ps@hymatik.com | www.hymatik.com | Hvidkaervej 27a, DK-5250 Odense SV, Denmark

Cylinder mountings

Swivel eye bracket MP6



Intended for use together with clevis bracket GA

Material:
Bracket: Aluminium
Swivel bearing acc. to DIN 648K: Hardened steel

Supplied complete with mounting screws for attachment to cylinder.

Cyl. bore Ø mm	Weight kg	Order code
32	0,08	**PD23843**
40	0,11	**PD23844**
50	0,20	**PD23845**
63	0,27	**PD23846**
80	0,52	**PD23847**
100	0,72	**PD23848**
125	1,53	**PD23849**

Cyl. bore mm	E mm	B1 mm	B2 mm	EN mm	R1 mm	R2 mm	FL mm	l2 mm	L mm	CN H7 mm	XD mm	Z
32	47	10,5	-	14	16	12	22	6.0	12	10	142	4°
40	55	12,0	-	16	21	14	25	6.0	15	12	160	4°
50	65	12,0	51	16	23	16	27	7.0	15	12	170	4°
63	78	15,0	-	21	27	19	32	7.0	20	16	190	4°
80	95	15,0	-	21	29	21	36	10.0	20	16	210	4°
100	115	18,0	-	25	34	24	41	10.0	25	20	230	4°
125	140	22,0	-	31	40	30	50	10.5	30	25	275	4°

S = Stroke length

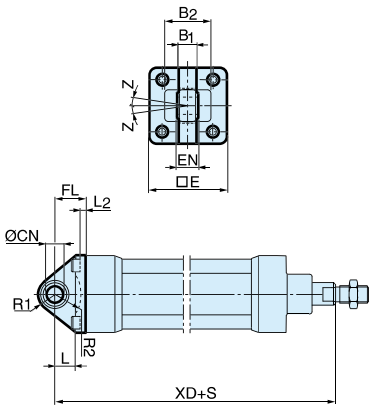

Clevis bracket MP2



Intended for flexible mounting of cylinder. Clevis bracket MP2 can be combined with clevis bracket MP4.

Material:
Clevis bracket: Aluminium
Pin: Surface hardened steel
Circlips according to DIN 471: Spring steel
Mounting screws acc. to DIN 912: Zinc-plated steel 8.8

Supplied complete with mounting screws for attachment to cylinder.

Cyl. bore Ø mm	Weight kg	Order code
32	0,08	**P1C-4KMTB**
40	0,11	**P1C-4LMTB**
50	0,14	**P1C-4MMTB**
63	0,29	**P1C-4NMTB**
80	0,36	**P1C-4PMTB**
100	0,64	**P1C-4QMTB**
125	1,17	**P1C-4RMTB**

Cyl. bore mm	C mm	E mm	UB h14 mm	CB H14 mm	FL ±0,2 mm	L mm	l2 mm	CD H9 mm	MR mm	XD mm
32	53	47	45	26	22	13	6,0	10	10	142
40	60	55	52	28	25	16	6,0	12	12	160
50	68	65	60	32	27	16	7,0	12	12	170
63	78	78	70	40	32	21	7,0	16	16	190
80	98	95	90	50	36	22	10,0	16	16	210
100	118	115	110	60	41	27	10,5	20	20	230
125	139	140	130	70	50	30	10,5	25	25	275

S = Stroke length

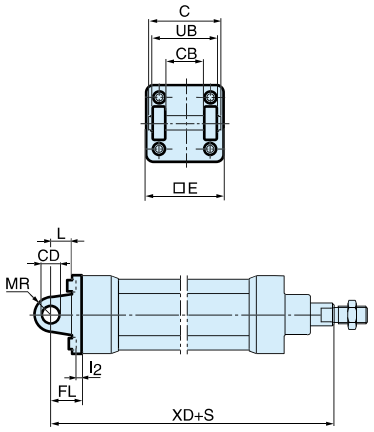

Tel: +45 63 12 83 00 | Email: ps@hymatik.com | www.hymatik.com | Hvidkaervej 27a, DK-5250 Odense SV, Denmark

Cylinder mountings

Clevis bracket MP4



Intended for flexible mounting of cylinder. Clevis bracket MP4 can be combined with clevis bracket MP2.

Material:
Clevis bracket: Aluminium
Mounting screws acc. to DIN 912: Zinc-plated steel 8.8

Supplied complete with mounting screws for attachment to cylinder.

Cyl. bore Ø mm	Weight kg	Order code
32	0,09	**PD23412**
40	0,13	**PD23413**
50	0,17	**PD23414**
63	0,36	**PD23415**
80	0,46	**PD23416**
100	0,83	**PD23417**
125	1,53	**PD23418**

Cyl. bore mm	E mm	EW mm	FL mm	L ±0,2 mm	l2 mm	CD mm	MR H9 mm	XD mm
32	47	26	22	13	6,0	10	10	142
40	55	28	25	16	6,0	12	12	160
50	65	32	27	16	7,0	12	12	170
63	78	40	32	21	7,0	16	16	190
80	95	50	36	22	10,0	16	16	210
100	115	60	41	27	10,5	20	20	230
125	140	70	50	30	10,5	25	25	275

S = Stroke length

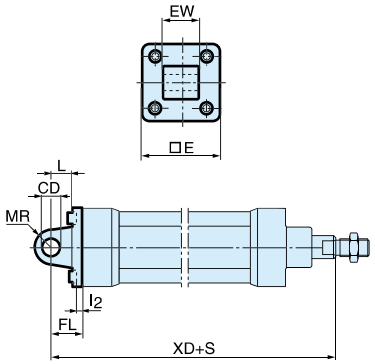

Clevis bracket AB6



Intended for flexible mounting of cylinder. Clevis bracket GA can be combined with pivot bracket with swivel bearing, swivel eye bracket and swivel rod eye.

Material:
Clevis bracket: Surface-treated aluminium
Pin: Surface hardened steel
Locking pin: Spring steel
Circlips according to DIN 471: Spring steel
Mounting screws acc. to DIN 912: Zinc-plated steel 8.8

Supplied complete with mounting screws for attachment to cylinder.

Cyl. bore Ø mm	Weight kg	Order code
32	0,09	**P1C-4KMCB**
40	0,13	**P1C-4LMCB**
50	0,17	**P1C-4MMCB**
63	0,36	**P1C-4NMCB**
80	0,58	**P1C-4PMCB**
100	0,89	**P1C-4QMCB**
125	1,75	**P1C-4RMCB**

Cyl. bore mm	C mm	E mm	B2 d12 mm	B1 H14 mm	T mm	B3 mm	R2 mm	L1 mm	FL ±0,2 mm	l2 mm	L mm	CN F7 mm	R1 mm	XD mm
32	41	45	34	14	3	3,3	17	11,5	22	5,5	12	10	11	142
40	48	55	40	16	4	4,3	20	12,0	25	5,5	15	12	13	160
50	54	65	45	21	4	4,3	22	14,0	27	6,5	17	16	18	170
63	60	75	51	21	4	4,3	25	14,0	32	6,5	20	16	18	190
80	75	95	65	25	4	4,3	30	16,0	36	10,0	20	20	22	210
100	85	115	75	25	4	4,3	32	16,0	41	10,0	25	20	22	230
125	110	140	97	37	6	6,3	42	24,0	50	10,0	30	30	30	275

S = Stroke length

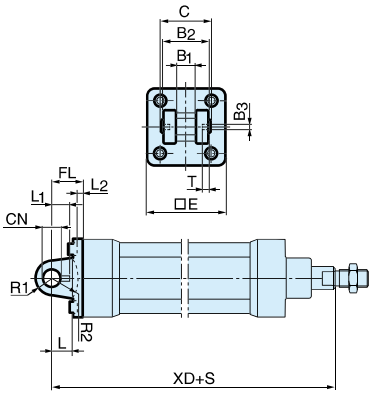

Cylinder mountings

Pivot bracket with swivel bearing CS7



Intended for use together with clevis bracket GA.

Material:
Pivot bracket: Surface-treated steel
Swivel bearing acc. to DIN 648K: Hardened steel

Cyl. bore Ø mm	Weight kg	Order code
32	0,18	**KC5130**
40	0,25	**KC5131**
50	0,47	**KC5132**
63	0,57	**KC5133**
80	1,05	**KC5134**
100	1,42	**KC5135**
125	3,10	**KC5136**

Cyl. bore mm	CN H7 mm	S5 H13 mm	K1 JS14 mm	K2 mm	EU mm	G1 JS14 mm	G2 JS14 mm	EN mm	G3 mm	CH JS15 mm	H6 mm	ER mm	Z
32	10	6,6	38	51	10,5	21	18	14	31	32	10	16	4°
40	12	6,6	41	54	12,0	24	22	16	35	36	10	18	4°
50	16	9,0	50	65	15,0	33	30	21	45	45	12	21	4°
63	16	9,0	52	67	15,0	37	35	21	50	50	12	23	4°
80	20	11,0	66	86	18,0	47	40	25	60	63	14	28	4°
100	20	11,0	76	96	18,0	55	50	25	70	71	15	30	4°
125	30	14,0	94	124	25,0	70	60	37	90	90	20	40	4°

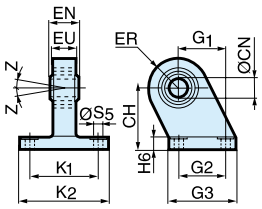

3 and 4 positions flange JP1



Mounting kit for back to back mounted cylinders, 3 and 4 position cylinders.

Material:
Mounting: Aluminium
Mounting screws: Zinc-plated steel 8.8

Cyl. bore Ø mm	Weight kg	Order code
32	0,09	**P1E-6KB0**
40	0,13	**P1E-6LB0**
50	0,17	**P1E-6MB0**
63	0,36	**P1E-6NB0**
80	0,46	**P1E-6PB0**
100	0,83	**P1E-6QB0**

Cyl. bore mm	E mm	TG mm	ØFB mm	MF mm	A mm	ØBA mm
32	50	32,5	6,5	5	16	30
40	60	38,0	6,5	5	16	35
50	66	46,5	8,5	6	20	40
63	80	56,5	8,5	6	20	45
80	100	72,0	10,5	8	25	45
100	118	89,0	10,5	8	25	55

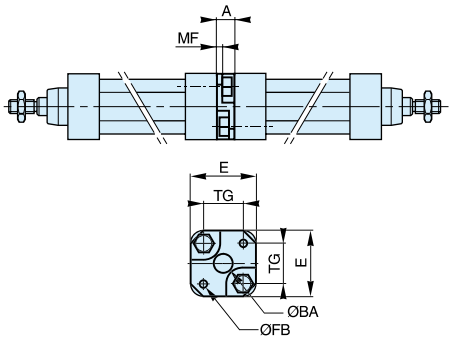

Pivot brackets AT4 for MT*



Intended for use together with trunnion MT4.

Material:
Pivot bracket: Aluminium
Bearing: Composite

Supplied in pairs.

Cyl. bore Ø mm	Weight kg	Order code
32	0,06	**PD23381**
40	0,06	**PD23382**
50	0,06	**PD23382**
63	0,10	**PD23383**
80	0,10	**PD23383**
100	0,175	**PD23384**
125	0,175	**PD23384**

Cyl. bore mm	B1 mm	B2 mm	A mm	C mm	d1 mm	d2 H13 mm	H1 mm	H2 mm	fx45° min mm
32	55	20	36	10,5	12	8,4	26	13	1,0
40	55	20	36	12,0	16	8,4	26	13	1,6
50	55	20	36	12,0	16	8,4	26	13	1,6
63	65	25	42	13,0	20	10,5	30	15	1,6
80	65	25	42	13,0	20	10,5	30	15	1,6
100	75	28	50	16,0	25	13,0	40	20	2,0
125	75	28	50	16,0	25	13,0	40	20	2,0

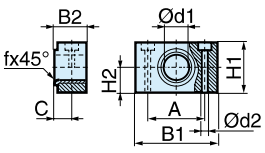

Tel: +45 63 12 83 00 | Email: ps@hymatik.com | www.hymatik.com | Hvidkaervej 27a, DK-5250 Odense SV, Denmark

Cylinder mountings

Intermediate trunnion MT4



Intended for articulated mounting of cylinder. The trunnion is factory-fitted in the centre of the cylinder or at an optional location specified by the XV-measure - Combined with pivot brackets AT4.
Material:
Trunnion: Zinc plated steel

Trunnion centred
The central trunnion for the P1D-B is ordered with letter D in position 17 (no dimension specified in positions 18-20).
e.g. P1D-B100MS-0500NDNNN

Trunnion with optional location
The trunnion for the P1D-B is ordered with letter G in position 17 and desired XV-measure (3-digit measure in mm) in positions 18-20. e.g. P1D-B100MS-0500NG300

Cyl. bore Ø mm	Weight kg
32	0,13
40	0,31
50	0,37
63	0,69
80	0,89
100	1,58
125	2,60

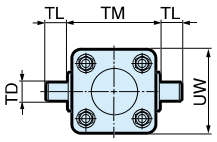

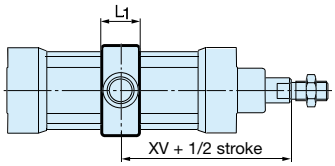

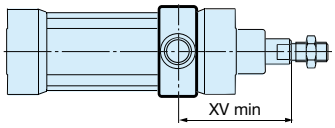

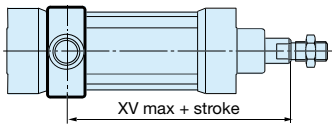

Cyl. bore mm	L1 **P1D-B mm**	TL **h14 mm**	TM **h14 mm**	Ø TD **e9 mm**	UW **P1D-B mm**	XV min **P1D-B mm**	XV **P1D-B mm**	XV max **P1D-B mm**
32	18	12	50	12	52	63,5	73,0	82,5
40	20	16	63	16	59	73,0	82,5	92,0
50	20	16	75	16	71	80,5	90,0	99,5
63	26	20	90	20	84	89,5	97,5	105,5
80	26	20	110	20	105	98,5	110,0	121,5
100	32	25	132	25	129	111,5	120,0	128,5
125	33	25	180	25	159	132,5	145,0	157,5

Important: If the cylinder is ordered with a piston rod protusion (WH dimension), please add this extra length to XVmin, XV and XVmax.

Flange mounted trunnion MT5/MT6



Intended for articulated mounting of cylinder. This trunnion can be flange mounted on the front or rear end cover of all P1D cylinders.
Individual trunnions have order code as shown to the right.

Material:
Trunnion: zinc plated steel
Screws: zinc plated steel, 8.8

Delivered complete with mounting screws for attachment to the cylinder

Cyl. bore Ø mm	Weight kg	Order code
32	0,17	**P1D-4KMYF**
40	0,43	**P1D-4LMYF**
50	0,55	**P1D-4MMYF**
63	1,10	**P1D-4NMYF**
80	1,66	**P1D-4PMYF**
100	3,00	**P1D-4QMYF**

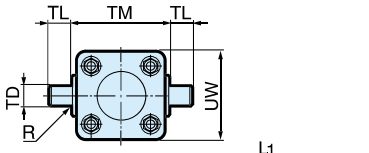

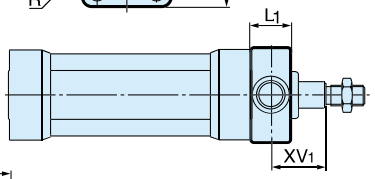

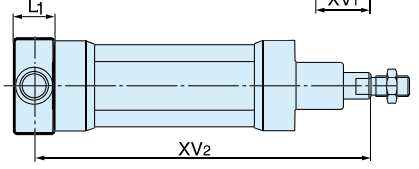

Cyl. bore mm	TM h14 mm	TL h14 mm	TD e9 mm	R mm	UW mm	L1 mm	XV_1 mm	X mm	Y mm
32	50	12	12	1,0	46	14	19,5	126,5	11
40	63	16	16	1,6	59	19	21,0	144,0	14
50	75	16	16	1,6	69	19	28,0	152,0	20
63	90	20	20	1,6	84	24	25,5	169,5	20
80	110	20	20	1,6	102	24	34,5	185,5	26
100	132	25	25	2,0	125	29	37,0	203,0	31

XV_2 = X +Stroke length

Tel: +45 63 12 83 00 | Email: ps@hymatik.com | www.hymatik.com | Hvidkaervej 27a, DK-5250 Odense SV, Denmark

Piston rod mountings

Swivel rod eye AP6



Swivel rod eye for articulated mounting of cylinder.
Swivel rod eye can be combined with clevis bracket GA.
Maintenance-free.

Material:
Swivel rod eye: Zinc-plated steel
Swivel bearing according to DIN 648K: Hardened steel

Cyl. bore Ø mm	Weight kg	Order code
32	0,08	**P1C-4KRS**
40	0,12	**P1C-4LRS**
50	0,25	**P1C-4MRS**
63	0,25	**P1C-4MRS**
80	0,46	**P1C-4PRS**
100	0,46	**P1C-4PRS**
125	1,28	**P1C-4RRS**

Cyl. bore mm	A mm	B min mm	B max mm	CE mm	CN H9 mm	EN h12 mm	ER mm	KK	LE min mm	N mm	O mm	Z
32	20	48,0	55	43	10	14	14	M10x1,25	15	17	10,5	12°
40	22	56,0	62	50	12	16	16	M12x1,25	17	19	12,0	12°
50	28	72,0	80	64	16	21	21	M16x1,5	22	22	15,0	15°
63	28	72,0	80	64	16	21	21	M16x1,5	22	22	15,0	15°
80	33	87,0	97	77	20	25	25	M20x1,5	26	32	18,0	15°
100	33	87,0	97	77	20	25	25	M20x1,5	26	32	18,0	15°
125	51	123,5	137	110	30	37	35	M27x2	36	41	25,0	15°

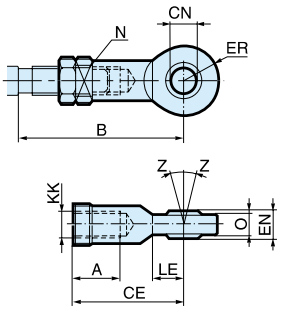

Clevis AP2



Clevis for articulated mounting of cylinder.

Material:
Clevis, clip: Galvanized steel
Pin: Hardened steel

Cyl. bore Ø mm	Weight kg	Order code
32	0,09	**P1C-4KRC**
40	0,15	**P1C-4LRC**
50	0,35	**P1C-4MRC**
63	0,35	**P1C-4MRC**
80	0,75	**P1C-4PRC**
100	0,75	**P1C-4PRC**
125	2,10	**P1C-4RRC**

Cyl. bore mm	A mm	B min mm	B max mm	CE mm	CK h11/E9 mm	CL mm	CM mm	ER mm	KK	LE mm	O mm
32	20	45,0	52	40	10	20	10	16	M10x1,25	20	28,0
40	24	54,0	60	48	12	24	12	19	M12x1,25	24	32,0
50	32	72,0	80	64	16	32	16	25	M16x1,5	32	41,5
63	32	72,0	80	64	16	32	16	25	M16x1,5	32	41,5
80	40	90,0	100	80	20	40	20	32	M20x1,5	40	50,0
100	40	90,0	100	80	20	40	20	32	M20x1,5	40	50,0
125	56	123,5	137	110	30	55	30	45	M27x2	54	72,0

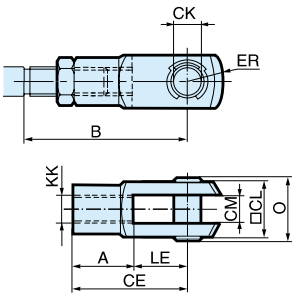

Parker Hannifin Corporation
Pneumatic Division - Europe

Tel: +45 63 12 83 00 | Email: ps@hymatik.com | www.hymatik.com | Hvidkaervej 27a, DK-5250 Odense SV, Denmark

Piston rod mountings

Flexo coupling PM5



Flexo coupling for articulated mounting of piston rod. Flexo fitting is intended to take up axial angle errors within a range of ±4°.

Material
Flexo coupling, nut: Zinc-plated steel

Supplied complete with galvanized adjustment nut.

Cyl. bore Ø mm	Weight kg	Order code
32	0,23	**P1C-4KRF**
40	0,23	**P1C-4LRF**
50	0,65	**P1C-4MRF**
63	0,65	**P1C-4MRF**
80	0,71	**P1C-4PRF**
100	0,71	**P1C-4PRF**
125	1,60	**P1C-4RRF**

Cyl. bore mm	KK mm	B mm	C mm	D mm	E mm	ØF mm	SW1 mm	SW2 mm	SW3 mm	SW4 mm	SW5 mm
32	M10x1.25	20	23	73	31	21	12	30	30	19	17
40	M12x1.25	24	23	77	31	21	12	30	30	19	19
50	M16x1.5	32	32	108	45	33.5	19	41	41	30	24
63	M16x1.5	32	32	108	45	33.5	19	41	41	30	24
80	M20x1.5	40	42	122	56	33.5	19	41	41	30	30
100	M20x1.5	40	42	122	56	33.5	19	41	41	30	30
125	M27x2	54	48	147	51	39	24	55	55	32	41

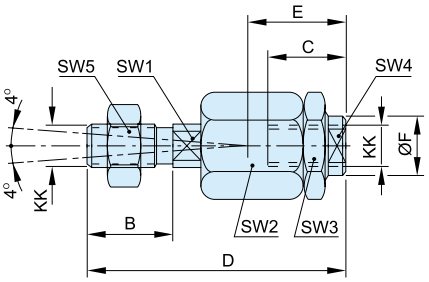

Nut MR9 *



Intended for fixed mounting of accessories to the piston rod.
Material: Zinc-plated steel
Supplied as pack of 10 off

All P1D cylinders are delivred with a zinc-plated steel piston rod nut.

Cyl. bore Ø mm	Weight** kg	Order code
32	0,007	**P14-4KRPZ**
40	0,010	**P14-4LRPZ**
50	0,021	**P14-4MRPZ**
63	0,021	**P14-4MRPZ**
80	0,040	**P14-4PRPZ**
100	0,040	**P14-4PRPZ**
125	0,100	**P14-4RRPZ**

* Supplied as pack of 10 off
** Weight per item

Cyl. bore mm	A mm	B mm	C
32	17	5,0	M10x1,25
40	19	6,0	M12x1,25
50	24	8,0	M16x1,5
63	24	8,0	M16x1,5
80	30	10,0	M20x1,5
100	30	10,0	M20x1,5
125	41	13,5	M27x2

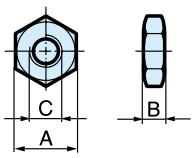

	Flange MF1/MF2 [1]	Foot brackets MS1 [2]	Pivot bracket with rigid bearing AB7 [3]	Swivel eye bracket MP6 [4]	Clevis bracket MP2 [5]
					
Ø 32	P1C-4KMB	P1C-4KMF	P1C-4KMDB	PD23843	P1C-4KMTB
Ø 40	P1C-4LMB	P1C-4LMF	P1C-4LMDB	PD23844	P1C-4LMTB
Ø 50	P1C-4MMB	P1C-4MMF	P1C-4MMDB	PD23845	P1C-4MMTB
Ø 63	P1C-4NMB	P1C-4NMF	P1C-4NMDB	PD23846	P1C-4NMTB
Ø 80	P1C-4PMB	P1C-4PMF	P1C-4PMDB	PD23847	P1C-4PMTB
Ø 100	P1C-4QMB	P1C-4QMF	P1C-4QMDB	PD23848	P1C-4QMTB
Ø 125	P1C-4RMB	P1C-4RMF	P1C-4RMDB	PD23849	P1C-4RMTB

	Clevis bracket MP4 [6]	Clevis bracket AB6 [7]	Pivot bracket with swivel bearing CS7 [8]	3 and 4 positions flange JP1	Pivot brackets AT4 [10] for MT*
					
Ø 32	PD23412	P1C-4KMCB	KC5130	P1E-6KB0	PD23381
Ø 40	PD23413	P1C-4LMCB	KC5131	P1E-6LB0	PD23382
Ø 50	PD23414	P1C-4MMCB	KC5132	P1E-6MB0	PD23382
Ø 63	PD23415	P1C-4NMCB	KC5133	P1E-6NB0	PD23383
Ø 80	PD23416	P1C-4PMCB	KC5134	P1E-6PB0	PD23383
Ø 100	PD23417	P1C-4QMCB	KC5135	P1E-6QB0	PD23384
Ø 125	PD23418	P1C-4RMCB	KC5136		PD23384

	Flange mounting trunnion MT5/MT6 [11]	Swivel rod eye AP6 [12]	Clevis AP2 [13]	Flexo coupling PM5 [14]	Nut MR9
					
Ø 32	P1D-4KMYF	P1C-4KRS	P1C-4KRC	P1C-4KRF	P14-4KRPZ
Ø 40	P1D-4LMYF	P1C-4LRS	P1C-4LRC	P1C-4LRF	P14-4LRPZ
Ø 50	P1D-4MMYF	P1C-4MRS	P1C-4MRC	P1C-4MRF	P14-4MRPZ
Ø 63	P1D-4NMYF	P1C-4MRS	P1C-4MRC	P1C-4MRF	P14-4MRPZ
Ø 80	P1D-4PMYF	P1C-4PRS	P1C-4PRC	P1C-4PRF	P14-4PRPZ
Ø 100	P1D-4QMYF	P1C-4PRS	P1C-4PRC	P1C-4PRF	P14-4PRPZ
Ø 125		P1C-4RRS	P1C-4RRC	P1C-4RRF	P14-4RRPZ

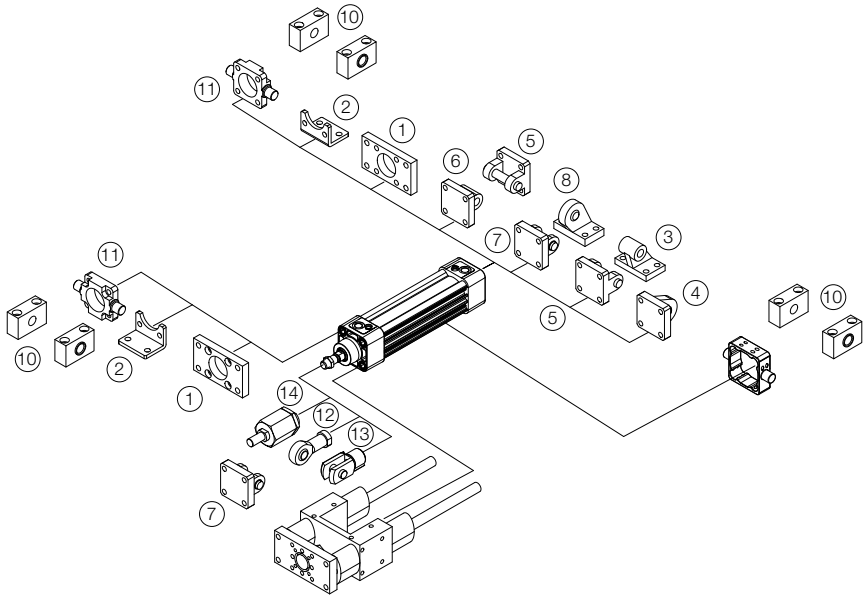

Tel: +45 63 12 83 00 | Email: ps@hymatik.com | www.hymatik.com | Hvidkaervej 27a, DK-5250 Odense SV, Denmark

P1D Ultra Clean without sensor function

This version is a permanently sealed P1D Ultra Clean with no facility for installing sensors.
The cylinder has a very clean design and is intended for applications where no sensors are used.
The P1D without the sensor function can of course be combined with other equipment and functions.



1	2	3	4	5	6	7	8	9	10	11	12	13	14	15
P	1	D	–	C	0	4	0	H	S	N	0	2	5	0

Cylinder version	
C	Ultra Clean

P1D Ultra Clean without sensor function is defined by the letter C in position 5, N in position 11 and the 15-digit order code.

Without sensor function - HDPE scraper, stainless steel end covers screws

Cyl. bore mm	Stroke mm	Order code
32 Conn. G1/8	25	**P1D-C032HSN0025**
	40	**P1D-C032HSN0040**
	50	**P1D-C032HSN0050**
	80	**P1D-C032HSN0080**
	100	**P1D-C032HSN0100**
	125	**P1D-C032HSN0125**
	160	**P1D-C032HSN0160**
	200	**P1D-C032HSN0200**
	250	**P1D-C032HSN0250**
	320	**P1D-C032HSN0320**
	400	**P1D-C032HSN0400**
	500	**P1D-C032HSN0500**
40 Conn. G1/4	25	**P1D-C040HSN0025**
	40	**P1D-C040HSN0040**
	50	**P1D-C040HSN0050**
	80	**P1D-C040HSN0080**
	100	**P1D-C040HSN0100**
	125	**P1D-C040HSN0125**
	160	**P1D-C040HSN0160**
	200	**P1D-C040HSN0200**
	250	**P1D-C040HSN0250**
	320	**P1D-C040HSN0320**
	400	**P1D-C040HSN0400**
	500	**P1D-C040HSN0500**
50 Conn. G1/4	25	**P1D-C050HSN0025**
	40	**P1D-C050HSN0040**
	50	**P1D-C050HSN0050**
	80	**P1D-C050HSN0080**
	100	**P1D-C050HSN0100**
	125	**P1D-C050HSN0125**
	160	**P1D-C050HSN0160**
	200	**P1D-C050HSN0200**
	250	**P1D-C050HSN0250**
	320	**P1D-C050HSN0320**
	400	**P1D-C050HSN0400**
	500	**P1D-C050HSN0500**

Cyl. bore mm	Stroke mm	Order code
63 Conn. G3/8	25	**P1D-C063HSN0025**
	40	**P1D-C063HSN0040**
	50	**P1D-C063HSN0050**
	80	**P1D-C063HSN0080**
	100	**P1D-C063HSN0100**
	125	**P1D-C063HSN0125**
	160	**P1D-C063HSN0160**
	200	**P1D-C063HSN0200**
	250	**P1D-C063HSN0250**
	320	**P1D-C063HSN0320**
	400	**P1D-C063HSN0400**
	500	**P1D-C063HSN0500**
80 Conn. G3/8	25	**P1D-C080HSN0025**
	40	**P1D-C080HSN0040**
	50	**P1D-C080HSN0050**
	80	**P1D-C080HSN0080**
	100	**P1D-C080HSN0100**
	125	**P1D-C080HSN0125**
	160	**P1D-C080HSN0160**
	200	**P1D-C080HSN0200**
	250	**P1D-C080HSN0250**
	320	**P1D-C080HSN0320**
	400	**P1D-C080HSN0400**
	500	**P1D-C080HSN0500**
100 Conn. G1/2	25	**P1D-C100HSN0025**
	40	**P1D-C100HSN0040**
	50	**P1D-C100HSN0050**
	80	**P1D-C100HSN0080**
	100	**P1D-C100HSN0100**
	125	**P1D-C100HSN0160**
	200	**P1D-C100HSN0200**
	250	**P1D-C100HSN0250**
	320	**P1D-C100HSN0320**
	400	**P1D-C100HSN0400**
	500	**P1D-C100HSN0500**

Cyl. bore mm	Stroke mm	Order code
125 Conn. G1/2	25	**P1D-C125HSN0025**
	40	**P1D-C125HSN0040**
	50	**P1D-C125HSN0050**
	80	**P1D-C125HSN0080**
	100	**P1D-C125HSN0100**
	125	**P1D-C125HSN0125**
	160	**P1D-C125HSN0160**
	200	**P1D-C125HSN0200**
	250	**P1D-C125HSN0250**
	320	**P1D-C125HSN0320**
	400	**P1D-C125HSN0400**
	500	**P1D-C125HSN0500**

The cylinders are supplied complete with one stainless steel piston rod nut as standard.

Sealing plugs for end cover screws



See page 35.

Tel: +45 63 12 83 00 | Email: ps@hymatik.com | www.hymatik.com | Hvidkaervej 27a, DK-5250 Odense SV, Denmark

P1D-C (Ultra Clean) Series

Without sensor

Sealing plug as accessory

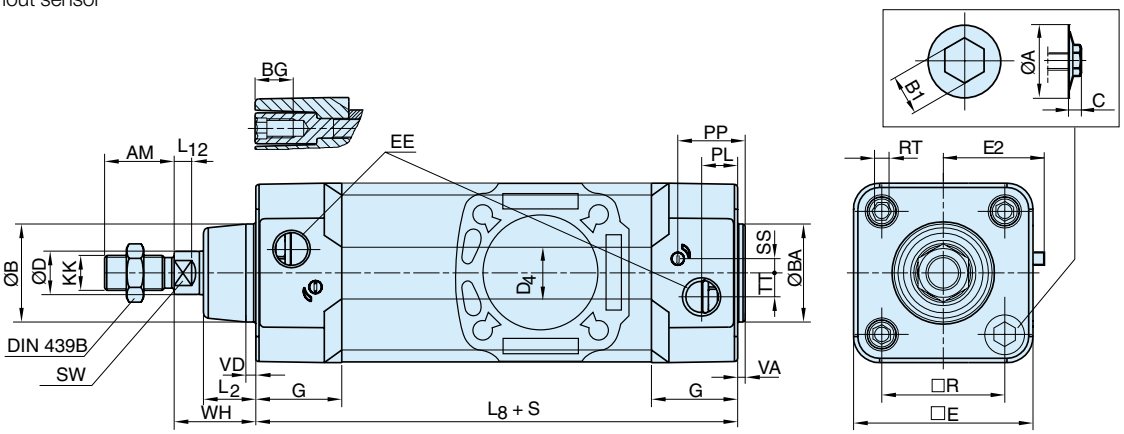

Internal piston rod thread

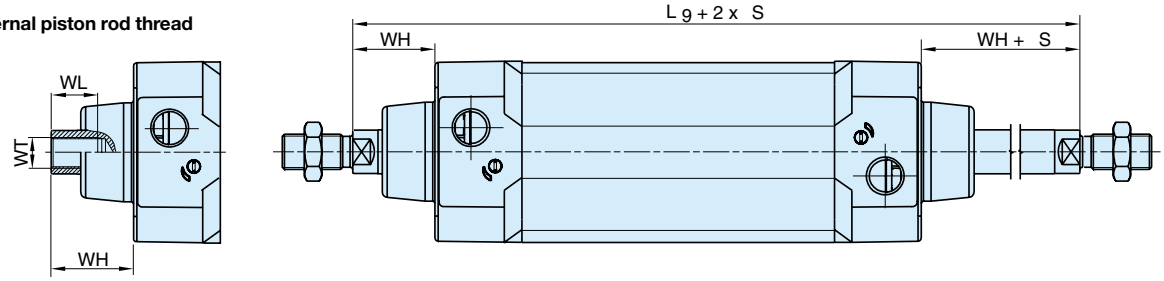

Dimensions

Cylinder bore mm	A mm	AM mm	B mm	B1 mm	BA mm	BG mm	C mm	D mm	D4 mm	E mm	EE mm	G mm	KK	L2 mm
32	15	22	30	8	30	16	5,2	12	45,0	50,0	G1/8	28,5	M10x1,25	16,0
40	15	24	35	8	35	16	5,2	16	52,0	57,4	G1/4	33,0	M12x1,25	19,0
50	18,5	32	40	10	40	16	6,7	20	60,7	69,4	G1/4	33,5	M16x1,5	24,0
63	18,5	32	45	10	45	16	6,7	20	71,5	82,4	G3/8	39,5	M16x1,5	24,0
80	21,5	40	45	11	45	17	7,8	25	86,7	99,4	G3/8	39,5	M20x1,5	30,0
100	21,5	40	55	11	55	17	7,8	25	106,7	116,0	G1/2	44,5	M20x1,5	32,4
125	24	54	60	13	60	20	9,3	32	134,0	139,0	G1/2	51,0	M27x2	45,0

Cylinder bore mm	L8 mm	L9 mm	L12 mm	PL mm	PP mm	R mm	RT	SS mm	SW mm	TT mm	VA mm	VD mm	WH mm	WL mm	WT
32	94	146	6,0	13,0	21,8	32,5	M6	4,0	10	4,5	3,5	4,5	26	21	M8x1
40	105	165	6,5	14,0	21,9	38,0	M6	8,0	13	5,5	3,5	4,5	30	23	M10x1,25
50	106	180	8,0	14,0	23,0	46,5	M8	4,0	17	7,5	3,5	5,0	37	31	M14x1,5
63	121	195	8,0	16,4	27,4	56,5	M8	6,5	17	11,0	3,5	5,0	37	31	M14x1,5
80	128	220	10,0	16,0	30,5	72,0	M10	0	22	15,0	3,5	4,0	46	39	M18x1,5
100	138	240	14,0	18,0	35,8	89,0	M10	0	22	20,0	3,5	4,0	51	39	M18x1,5
125	160	290	18,0	28,0	40,5	110,0	M12	0	27	17,5	5,5	6,0	65	53	M24x2

S=Stroke

Tolerances

Cylinder bore mm	B	BA	L_8 mm	L_9 mm	R mm	Stroke tolerance up to stroke 500 mm	Stroke tolerance for stroke over 500 mm
32	d11	d11	±0,4	±2	±0,5	+0,3/+2,0	+0,3/+3,0
40	d11	d11	±0,7	±2	±0,5	+0,3/+2,0	+0,3/+3,0
50	d11	d11	±0,7	±2	±0,6	+0,3/+2,0	+0,3/+3,0
63	d11	d11	±0,8	±2	±0,7	+0,3/+2,0	+0,3/+3,0
80	d11	d11	±0,8	±3	±0,7	+0,3/+2,0	+0,3/+3,0
100	d11	d11	±1,0	±3	±0,7	+0,3/+2,0	+0,3/+3,0
125	d11	d11	±1,0	±3	±1,1	+0,3/+2,0	+0,3/+3,0

Tel: +45 63 12 83 00 | Email: ps@hymatik.com | www.hymatik.com | Hvidkaervej 27a, DK-5250 Odense SV, Denmark

Cylinder mountings

Intermediate trunnion MT4 for P1D-C Ultra Clean



Not for the P1D-C Pro Clean version.
P1D-C Ultra Clean in bore sizes 32 to 80 mm and strokes up to 700 mm. Longer stroke length on request. Shaft square to 90° with air ports only.
Material: stainless steel

Trunnion centred
The centred trunnion for the P1D-C is ordered with letter D in position 17 (no dimension specified in positions 18-20, letters are NNN).

Trunnion with optional postion XV measure
The intermediate trunnion for the P1D-C is ordered with a letter in position 17 and desired XV-measure (3 digit measure in mm in positions 18-20).

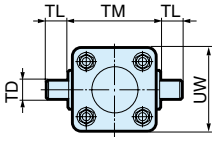

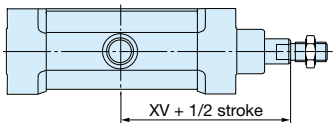

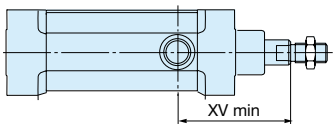

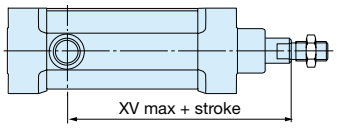

Cyl. bore mm	L1 **P1D-C mm**	TL **h14 mm**	TM **h14 mm**	Ø TD **e9 mm**	UW **P1D-C mm**	XV min **P1D-C mm**	XV **P1D-C mm**	XV max **P1D-C mm**
32	12	12	50	12	0	69,5	73,0	76,0
40	16	16	63	16	0	78,0	82,5	86,5
50	16	16	75	16	0	85,5	90,0	94,5
63	20	20	90	20	0	103,5	97,5	91,0
80	20	20	110	20	0	112,5	110,0	107,0

Important: If the cylinder is ordered with a piston rod protusion (WH dimension), please add this extra length to XVmin, XV and XVmax.

Parker Hannifin Corporation
Pneumatic Division - Europe

Tel: +45 63 12 83 00 | Email: ps@hymatik.com | www.hymatik.com | Hvidkaervej 27a, DK-5250 Odense SV, Denmark

P1D Pro Clean with sensor function

This version is a P1D Pro Clean design with 2 T slots on one face of the tube giving then the possibility to add sensors. The cylinder has a clean design and is intended for applications where sensors still need to be used.

The P1D with the sensor function can of course be combined with other equipment and functions.



1	2	3	4	5	6	7	8	9	10	11	12	13	14	15
P	1	D	–	C	0	4	0	W	S	T*	0	2	5	0

Cylinder version	
C	Pro Clean

P1D Pro Clean with sensor function is defined by the letter C in position 5, and in position 11 by the position of the 2 T slots.
*** T on the top, - Y on the right, W on the bottom, V on the left side and the 15-digit order code.**
Note: cylinder is showed piston rod in the front and air ports on the top to determine face position.

T slots position for ordering

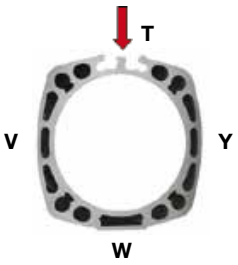

With 2 T slots on the top - FPM scraper, stainless steel end covers screws

Cyl. bore mm	Stroke mm	Order code
32 Conn. G1/8	25	**P1D-C032WST0025**
	40	**P1D-C032WST0040**
	50	**P1D-C032WST0050**
	80	**P1D-C032WST0080**
	100	**P1D-C032WST0100**
	125	**P1D-C032WST0125**
	160	**P1D-C032WST0160**
	200	**P1D-C032WST0200**
	250	**P1D-C032WST0250**
	320	**P1D-C032WST0320**
	400	**P1D-C032WST0400**
	500	**P1D-C032WST0500**
40 Conn. G1/4	25	**P1D-C040WST0025**
	40	**P1D-C040WST0040**
	50	**P1D-C040WST0050**
	80	**P1D-C040WST0080**
	100	**P1D-C040WST0100**
	125	**P1D-C040WST0125**
	160	**P1D-C040WST0160**
	200	**P1D-C040WST0200**
	250	**P1D-C040WST0250**
	320	**P1D-C040WST0320**
	400	**P1D-C040WST0400**
	500	**P1D-C040WST0500**
50 Conn. G1/4	25	**P1D-C050WST0025**
	40	**P1D-C050WST0040**
	50	**P1D-C050WST0050**
	80	**P1D-C050WST0080**
	100	**P1D-C050WST0100**
	125	**P1D-C050WST0125**
	160	**P1D-C050WST0160**
	200	**P1D-C050WST0200**
	250	**P1D-C050WST0250**
	320	**P1D-C050WST0320**
	400	**P1D-C050WST0400**
	500	**P1D-C050WST0500**

Cyl. bore mm	Stroke mm	Order code
63 Conn. G3/8	25	**P1D-C063WST0025**
	40	**P1D-C063WST0040**
	50	**P1D-C063WST0050**
	80	**P1D-C063WST0080**
	100	**P1D-C063WST0100**
	125	**P1D-C063WST0125**
	160	**P1D-C063WST0160**
	200	**P1D-C063WST0200**
	250	**P1D-C063WST0250**
	320	**P1D-C063WST0320**
	400	**P1D-C063WST0400**
	500	**P1D-C063WST0500**
80 Conn. G3/8	25	**P1D-C080WST0025**
	40	**P1D-C080WST0040**
	50	**P1D-C080WST0050**
	80	**P1D-C080WST0080**
	100	**P1D-C080WST0100**
	125	**P1D-C080WST0125**
	160	**P1D-C080WST0160**
	200	**P1D-C080WST0200**
	250	**P1D-C080WST0250**
	320	**P1D-C080WST0320**
	400	**P1D-C080WST0400**
	500	**P1D-C080WST0500**
100 Conn. G1/2	25	**P1D-C100WST0025**
	40	**P1D-C100WST0040**
	50	**P1D-C100WST0050**
	80	**P1D-C100WST0080**
	100	**P1D-C100WST0100**
	125	**P1D-C100WST0125**
	160	**P1D-C100WST0160**
	200	**P1D-C100WST0200**
	250	**P1D-C100WST0250**
	320	**P1D-C100WST0320**
	400	**P1D-C100WST0400**
	500	**P1D-C100WST0500**

Cyl. bore mm	Stroke mm	Order code
125 Conn. G1/2	25	**P1D-C125WST0025**
	40	**P1D-C125WST0040**
	50	**P1D-C125WST0050**
	80	**P1D-C125WST0080**
	100	**P1D-C125WST0100**
	125	**P1D-C125WST0125**
	160	**P1D-C125WST0160**
	200	**P1D-C125WST0200**
	250	**P1D-C125WST0250**
	320	**P1D-C125WST0320**
	400	**P1D-C125WST0400**
	500	**P1D-C125WST0500**

The cylinders are supplied complete with one stainless steel piston rod nut as standard.

Sealing plugs for end cover screws



See page 35.

Sensors



For sensors see page 77.

Tel: +45 63 12 83 00 | Email: ps@hymatik.com | www.hymatik.com | Hvidkaervej 27a, DK-5250 Odense SV, Denmark

P1D-C (Pro Clean) Series

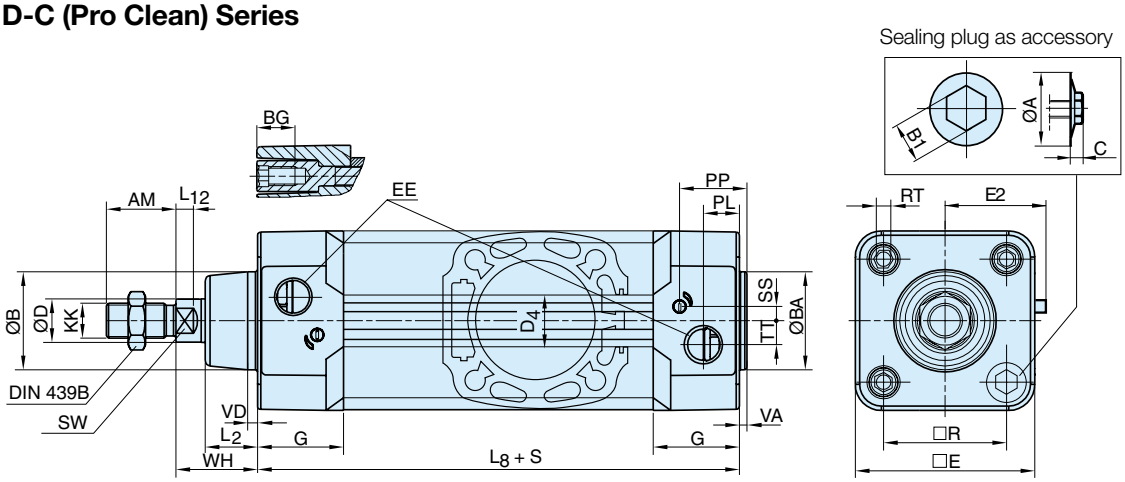

Internal piston rod thread

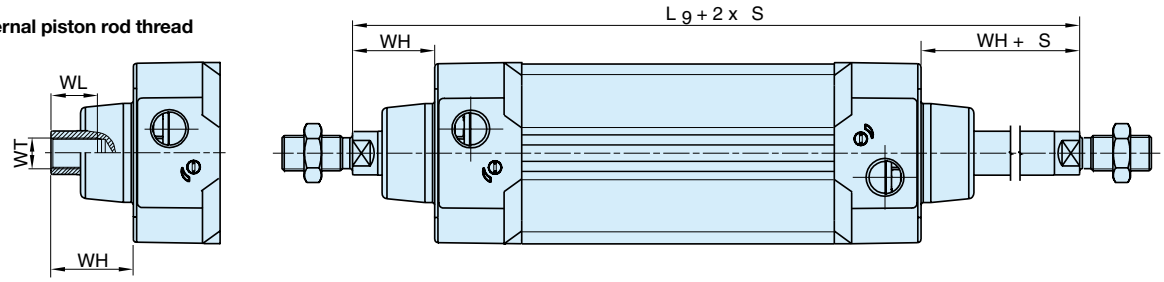

Dimensions

Cylinder bore mm	A mm	AM mm	B mm	B1 mm	BA mm	BG mm	C mm	D mm	D4 mm	E mm	EE mm	G mm	KK	L2 mm
32	15	22	30	8	30	16	5,2	12	45,0	50,0	G1/8	28,5	M10x1,25	16,0
40	15	24	35	8	35	16	5,2	16	52,0	57,4	G1/4	33,0	M12x1,25	19,0
50	18,5	32	40	10	40	16	6,7	20	60,7	69,4	G1/4	33,5	M16x1,5	24,0
63	18,5	32	45	10	45	16	6,7	20	71,5	82,4	G3/8	39,5	M16x1,5	24,0
80	21,5	40	45	11	45	17	7,8	25	86,7	99,4	G3/8	39,5	M20x1,5	30,0
100	21,5	40	55	11	55	17	7,8	25	106,7	116,0	G1/2	44,5	M20x1,5	32,4
125	24	54	60	13	60	20	9,3	32	134,0	139,0	G1/2	51,0	M27x2	45,0

Cylinder bore mm	L8 mm	L9 mm	L12 mm	PL mm	PP mm	R mm	RT	SS mm	SW mm	TT mm	VA mm	VD mm	WH mm	WL mm	WT
32	94	146	6,0	13,0	21,8	32,5	M6	4,0	10	4,5	3,5	4,5	26	21	M8x1
40	105	165	6,5	14,0	21,9	38,0	M6	8,0	13	5,5	3,5	4,5	30	23	M10x1,25
50	106	180	8,0	14,0	23,0	46,5	M8	4,0	17	7,5	3,5	5,0	37	31	M14x1,5
63	121	195	8,0	16,4	27,4	56,5	M8	6,5	17	11,0	3,5	5,0	37	31	M14x1,5
80	128	220	10,0	16,0	30,5	72,0	M10	0	22	15,0	3,5	4,0	46	39	M18x1,5
100	138	240	14,0	18,0	35,8	89,0	M10	0	22	20,0	3,5	4,0	51	39	M18x1,5
125	160	290	18,0	28,0	40,5	110,0	M12	0	27	17,5	5,5	6,0	65	53	M24x2

S=Stroke

Tolerances

Cylinder bore mm	B	BA	L_8 mm	L_9 mm	R mm	Stroke tolerance up to stroke 500 mm	Stroke tolerance for stroke over 500 mm
32	d11	d11	±0,4	±2	±0,5	+0,3/+2,0	+0,3/+3,0
40	d11	d11	±0,7	±2	±0,5	+0,3/+2,0	+0,3/+3,0
50	d11	d11	±0,7	±2	±0,6	+0,3/+2,0	+0,3/+3,0
63	d11	d11	±0,8	±2	±0,7	+0,3/+2,0	+0,3/+3,0
80	d11	d11	±0,8	±3	±0,7	+0,3/+2,0	+0,3/+3,0
100	d11	d11	±1,0	±3	±0,7	+0,3/+2,0	+0,3/+3,0
125	d11	d11	±1,0	±3	±1,1	+0,3/+2,0	+0,3/+3,0

Tel: +45 63 12 83 00 | Email: ps@hymatik.com | www.hymatik.com | Hvidkaervej 27a, DK-5250 Odense SV, Denmark

Design Variants for all P1D Series

Alternative piston rod materials

All P1D cylinders in all bores, Ø32-125 mm, can be ordered with the following piston rod materials:
– Steel, chromed-plated
– Stainless steel, roller polished (standard)
– Acid-proof steel, roller polished
– Stainless steel, chromed-plated



Through piston rod

All P1D cylinders in all bores, Ø32-125 mm, are available with a through rod. Cylinders with a through rod can take higher side forces thanks to the double support for the piston rod.



Operation with dry piston rod

In many applications, primarily in the foodstuffs industry, the cylinders are cleaned frequently. This means that the film of grease on the piston rod is washed off, which puts special demands on the materials and the design of the piston rod seal system (scraper ring and piston rod seal). Parker Hannifin has developed a piston rod seal system specially designed for dry rod operation. This is available as options for this type of applications, for all bores of P1D cylinders. The system has a specially designed L-shaped seal and the material is self-lubricating, high molecular weight plastics (HDPE) – the same system as in our P1S stainless steel cylinders.



Alternative scraper materials

For use in applications where chemicals may affect the scraper in the front end cover, an option with a scraper in FPM rubber for better chemical resistance is available.

On request there is also a scraper in food approved polyurethane material.











P1D-T Pneumatic Cylinders



The P1D-T range of cylinders is intended for use in a wide range of applications. Careful design and high quality manufacture throughout ensure long service life and optimum economy. Mounting dimensions fully in accordance with ISO 15552 (ISO 6431 and CETOP RP52P) greatly simplifies installation and world-wide interchangeability.

- Bore sizes Ø32 - Ø320mm
- Stroke lengths 5 to 2800 mm
- Magnetic piston as standard
- Adjustable cushioning as standard
- High and Low temperature versions
- ATEX version
- Special version on request

P1D Tie Rod

The P1D is available in a tie-rod version, based on the same high level technology. This future-proof cylinder is the perfect choice wherever a tie-rod cylinder is needed. Mounting dimensions fully in accordance with ISO 15552 (ISO 6431 and CETOP RP52P) greatly simplifies installation and world-wide interchangeability.

- Bore sizes Ø32 - Ø125mm
- Stroke lengths 5mm - 2800mm
- Magnetic piston as standard
- Adjustable cushioning as standard
- High and low temperature versions



Cyl. bore mm	Stroke mm	Order code
32 Conn. G1/8	25	**P1D-T032MS-0025**
	40	**P1D-T032MS-0040**
	50	**P1D-T032MS-0050**
	80	**P1D-T032MS-0080**
	100	**P1D-T032MS-0100**
	125	**P1D-T032MS-0125**
	160	**P1D-T032MS-0160**
	200	**P1D-T032MS-0200**
	250	**P1D-T032MS-0250**
	320	**P1D-T032MS-0320**
	400	**P1D-T032MS-0400**
	500	**P1D-T032MS-0500**
40 Conn. G1/4	25	**P1D-T040MS-0025**
	40	**P1D-T040MS-0040**
	50	**P1D-T040MS-0050**
	80	**P1D-T040MS-0080**
	100	**P1D-T040MS-0100**
	125	**P1D-T040MS-0125**
	160	**P1D-T040MS-0160**
	200	**P1D-T040MS-0200**
	250	**P1D-T040MS-0250**
	320	**P1D-T040MS-0320**
	400	**P1D-T040MS-0400**
	500	**P1D-T040MS-0500**
50 Conn. G1/4	25	**P1D-T050MS-0025**
	40	**P1D-T050MS-0040**
	50	**P1D-T050MS-0050**
	80	**P1D-T050MS-0080**
	100	**P1D-T050MS-0100**
	125	**P1D-T050MS-0125**
	160	**P1D-T050MS-0160**
	200	**P1D-T050MS-0200**
	250	**P1D-T050MS-0250**
	320	**P1D-T050MS-0320**
	400	**P1D-T050MS-0400**
	500	**P1D-T050MS-0500**
63 Conn. G3/8	25	**P1D-T063MS-0025**
	40	**P1D-T063MS-0040**
	50	**P1D-T063MS-0050**
	80	**P1D-T063MS-0080**
	100	**P1D-T063MS-0100**
	125	**P1D-T063MS-0125**
	160	**P1D-T063MS-0160**
	200	**P1D-T063MS-0200**
	250	**P1D-T063MS-0250**
	320	**P1D-T063MS-0320**
	400	**P1D-T063MS-0400**
	500	**P1D-T063MS-0500**

Cyl. bore mm	Stroke mm	Order code
80 Conn. G3/8	25	**P1D-T080MS-0025**
	40	**P1D-T080MS-0040**
	50	**P1D-T080MS-0050**
	80	**P1D-T080MS-0080**
	100	**P1D-T080MS-0100**
	125	**P1D-T080MS-0125**
	160	**P1D-T080MS-0160**
	200	**P1D-T080MS-0200**
	250	**P1D-T080MS-0250**
	320	**P1D-T080MS-0320**
	400	**P1D-T080MS-0400**
	500	**P1D-T080MS-0500**
100 Conn. G1/2	25	**P1D-T100MS-0025**
	40	**P1D-T100MS-0040**
	50	**P1D-T100MS-0050**
	80	**P1D-T100MS-0080**
	100	**P1D-T100MS-0100**
	125	**P1D-T100MS-0125**
	160	**P1D-T100MS-0160**
	200	**P1D-T100MS-0200**
	250	**P1D-T100MS-0250**
	320	**P1D-T100MS-0320**
	400	**P1D-T100MS-0400**
	500	**P1D-T100MS-0500**
125 Conn. G1/2	25	**P1D-T125MS-0025**
	40	**P1D-T125MS-0040**
	50	**P1D-T125MS-0050**
	80	**P1D-T125MS-0080**
	100	**P1D-T125MS-0100**
	125	**P1D-T125MS-0125**
	160	**P1D-T125MS-0160**
	200	**P1D-T125MS-0200**
	250	**P1D-T125MS-0250**
	320	**P1D-T125MS-0320**
	400	**P1D-T125MS-0400**
	500	**P1D-T125MS-0500**

The cylinders are supplied complete with one zinc plated steel piston rod nut.

For mountings see pages 29 to 36.

Sensors



For sensors see page 77.

Tel: +45 63 12 83 00 | Email: ps@hymatik.com | www.hymatik.com | Hvidkaervej 27a, DK-5250 Odense SV, Denmark

P1D-T Large Bore Cylinders

The P1D-T range of tie rod cylinders is intended for use in a wide range of applications. Careful design and high quality manufacture throughout ensure long service life and optimum economy. Mounting dimensions fully in accordance with ISO 15552 (ISO 6431 and CETOP RP52P) greatly simplifies installation and world-wide interchangeability.



- Bore sizes Ø160 - Ø320mm
- Stroke lengths 10mm - 2000mm
- Magnetic piston as standard
- Adjustable cushioning as standard
- High temperature version
- ATEX certified (add -EXNN on order code)

Operating information

Working pressure:	Max 10 bar
Seals / Temperature options	
Standard:	-20°C to +80°C
High temperature:	-10°C to +150°C
ATEX approval:	CE Ex IIGD c T4 120°C

For more information see www.parker.com/euro_pneumatic

P1D-T - Tie Rod

Ø160mm

Stroke mm	Order code
50	**P1D-T160MS-0050**
80	**P1D-T160MS-0080**
100	**P1D-T160MS-0100**
125	**P1D-T160MS-0125**
160	**P1D-T160MS-0160**
200	**P1D-T160MS-0200**
250	**P1D-T160MS-0250**
320	**P1D-T160MS-0320**
400	**P1D-T160MS-0400**
500	**P1D-T160MS-0500**
800	**P1D-T160MS-0800**
1000	**P1D-T160MS-1000**

Ø200mm

Stroke mm	Order code
50	**P1D-T200MS-0050**
80	**P1D-T200MS-0080**
100	**P1D-T200MS-0100**
125	**P1D-T200MS-0125**
160	**P1D-T200MS-0160**
200	**P1D-T200MS-0200**
250	**P1D-T200MS-0250**
320	**P1D-T200MS-0320**
400	**P1D-T200MS-0400**
500	**P1D-T200MS-0500**
800	**P1D-T200MS-0800**
1000	**P1D-T200MS-1000**

Ø250mm

Stroke mm	Order code
50	**P1D-T250MS-0050**
80	**P1D-T250MS-0080**
100	**P1D-T250MS-0100**
125	**P1D-T250MS-0125**
160	**P1D-T250MS-0160**
200	**P1D-T250MS-0200**
250	**P1D-T250MS-0250**
320	**P1D-T250MS-0320**
400	**P1D-T250MS-0400**
500	**P1D-T250MS-0500**
800	**P1D-T250MS-0800**
1000	**P1D-T250MS-1000**

Ø320mm

Stroke mm	Order code
50	**P1D-T320MS-0050**
80	**P1D-T320MS-0080**
100	**P1D-T320MS-0100**
125	**P1D-T320MS-0125**
160	**P1D-T320MS-0160**
200	**P1D-T320MS-0200**
250	**P1D-T320MS-0250**
320	**P1D-T320MS-0320**
400	**P1D-T320MS-0400**
500	**P1D-T320MS-0500**
800	**P1D-T320MS-0800**
1000	**P1D-T320MS-1000**

The cylinders are supplied complete with a zinc plated steel piston rod nut.

Sensors



For sensors see page 77.

Tel: +45 63 12 83 00 | Email: ps@hymatik.com | www.hymatik.com | Hvidkaervej 27a, DK-5250 Odense SV, Denmark

P1D-T Tie rod Standard temperature

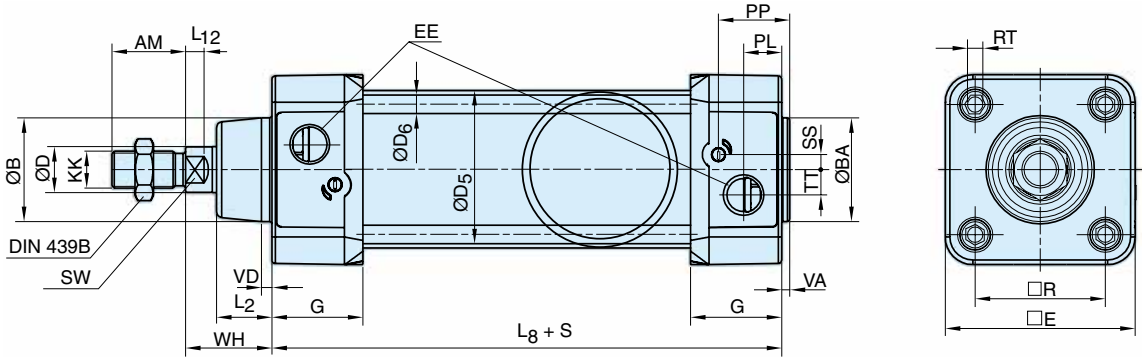

Internal piston rod thread

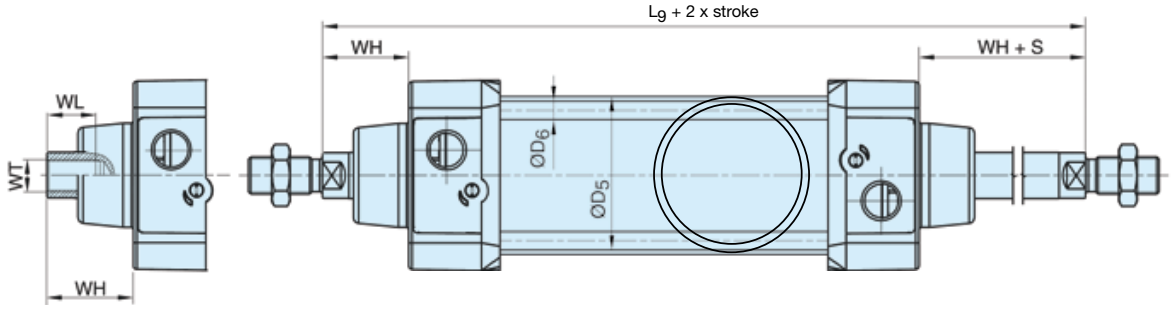

Dimensions

Cylinder bore mm	AM mm	B mm	BA mm	BG mm	D mm	D4 mm	E mm	EE mm	G mm	KK	L2 mm	L8 mm	L9 mm	L12 mm
32	22	30	30	16	12	45,0	50,0	G1/8	28,5	M10x1,25	16,0	94	146	6,0
40	24	35	35	16	16	52,0	57,4	G1/4	33,0	M12x1,25	19,0	105	165	6,5
50	32	40	40	16	20	60,7	69,4	G1/4	33,5	M16x1,5	24,0	106	180	8,0
63	32	45	45	16	20	71,5	82,4	G3/8	39,5	M16x1,5	24,0	121	195	8,0
80	40	45	45	17	25	86,7	99,4	G3/8	39,5	M20x1,5	30,0	128	220	10,0
100	40	55	55	17	25	106,7	116,0	G1/2	44,5	M20x1,5	32,4	138	240	14,0
125	54	60	60	20	32	134,0	139,0	G1/2	51,0	M27x2	45,0	160	290	18,0

Cylinder bore mm	OA mm	PL mm	PP mm	R mm	RT	SS mm	SW mm	TT mm	VA mm	VD mm	WH mm	WL mm	WT mm
32	6,0	13,0	21,8	32,5	M6	4,0	10	4,5	3,5	4,5	26	21	M8x1
40	6,0	14,0	21,9	38,0	M6	8,0	13	5,5	3,5	4,5	30	23	M10x1,25
50	8,0	14,0	23,0	46,5	M8	4,0	17	7,5	3,5	5,0	37	31	M14x1,5
63	8,0	16,4	27,4	56,5	M8	6,5	17	11,0	3,5	5,0	37	31	M14x1,5
80	6,0	16,0	30,5	72,0	M10	0	22	15,0	3,5	4,0	46	39	M18x1,5
100	6,0	18,0	35,8	89,0	M10	0	22	20,0	3,5	4,0	51	39	M18x1,5
125	8,0	28,0	40,5	110,0	M12	0	27	17,5	5,5	6,0	65	53	M24x2

S=Stroke

Tolerances

Cylinder bore mm	B	BA	L_8 mm	L_9 mm	R mm	Stroke tolerance up to stroke 500 mm	Stroke tolerance for stroke over 500 mm
32	d11	d11	±0,4	±2	±0,5	+0,3/+2,0	+0,3/+3,0
40	d11	d11	±0,7	±2	±0,5	+0,3/+2,0	+0,3/+3,0
50	d11	d11	±0,7	±2	±0,6	+0,3/+2,0	+0,3/+3,0
63	d11	d11	±0,8	±2	±0,7	+0,3/+2,0	+0,3/+3,0
80	d11	d11	±0,8	±3	±0,7	+0,3/+2,0	+0,3/+3,0
100	d11	d11	±1,0	±3	±0,7	+0,3/+2,0	+0,3/+3,0
125	d11	d11	±1,0	±3	±1,1	+0,3/+2,0	+0,3/+3,0

Tel: +45 63 12 83 00 | Email: ps@hymatik.com | www.hymatik.com | Hvidkaervej 27a, DK-5250 Odense SV, Denmark

P1D-T Series

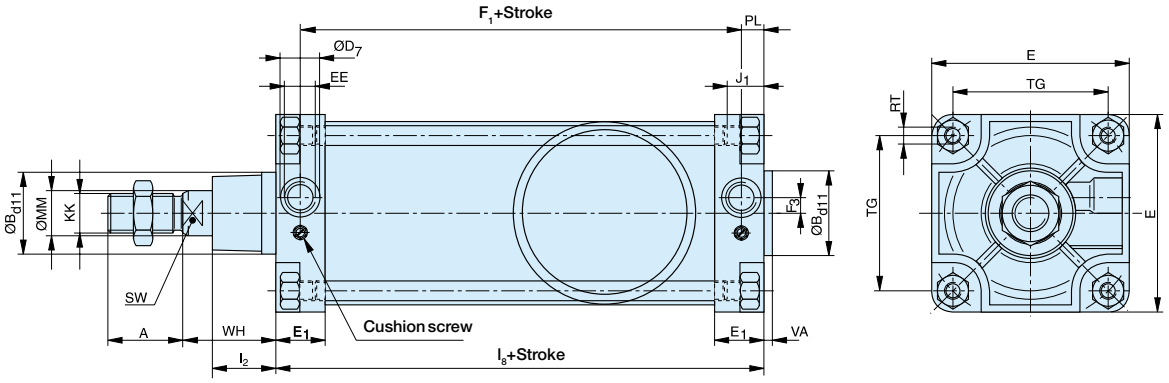

Note: for bore size 320mm, front air port in on the bottom of the axis of the cylinder and the cushioning screw on the top

Dimension Table (mm)

Cyl. Ø	A	ØB$_{d11}$	ØD$_7$	E	E$_1$	F$_1$ + Stroke	F$_3$	J$_1$ max.	l$_2$	l$_8$ + Stroke	EE	KK	MM	PL	RT	SW	TG	VA	WH
160	72	65	33	180	45	130	11	23	50	180	G3/4	M36x2	40	25	M16	36	140	6	80
200	72	75	33	220	45	130	15	23	60	180	G3/4	M36x2	40	25	M16	36	175	6	95
250	84	90	40	280	64	136	21	27	70	200	G1	M42x2	50	32	M20	46	280	10	105
320	96	110	-	340	56	164	–20*/20	28	89,5	220	G1	M48x2	63	28	M24	55	340	10	120

Weight (mass) kg

Cylinder version	Cylinder Diameter							
	Ø160		Ø200		Ø250		Ø320	
	1*	2*	1*	2*	1*	2*	1*	2*
Standard Type P1D-T	12.500	2.050	20.000	2.200	35.000	4.000	66.000	6.000

* 1 = Weight for cylinder with 100 mm stroke
2 = Weight for further 100 mm stroke length

Tolerances

Cylinder bore mm	L$_8$ mm	TG mm	Stroke tolerance up to stroke 500 mm	Stroke tolerance for stroke over 500 mm
160	±1,1	±1,1	+0,3/+2,0	+0,3/+3,0
200	±1,6	±1,1	+0,3/+2,0	+0,3/+3,0
250	±1,6	±1,5	+0,3/+2,0	+0,3/+3,0
320	±2,2	±1,5	+0,3/+2,0	+0,3/+3,0

Tel: +45 63 12 83 00 | Email: ps@hymatik.com | www.hymatik.com | Hvidkaervej 27a, DK-5250 Odense SV, Denmark

Cylinder mountings

Flange MF1/MF2



Intended for fixed mounting of cylinder. Flange can be fitted to front or rear end cover of cylinder.

Materials
Flange: Passivated steel
Mounting screws acc. to DIN 6912:
Zinc-plated steel 8.8

Supplied complete with mounting screws for attachment to cylinder.

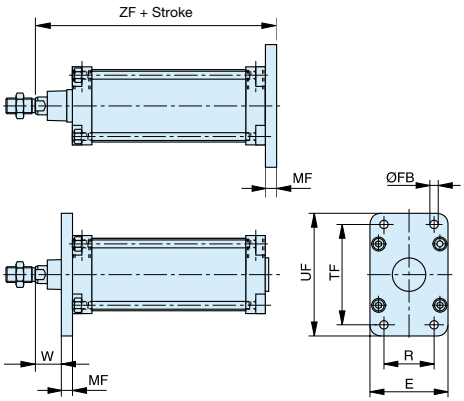

Bore mm	ZF mm	MF mm	W mm	UF mm	E mm	TF mm	R mm	ØFB mm	Weight kg	Order code
32	130,0	10,0	16,0	80,0	45,0	64,0	32,0	7,0	0,23	**P1C-4KMB**
40	145,0	10,0	20,0	80,0	52,0	72,0	36,0	9,0	0,28	**P1C-4LMB**
50	155,0	12,0	25,0	80,0	65,0	90,0	45,0	9,0	0,53	**P1C-4MMB**
63	170,0	12,0	25,0	80,0	75,0	100,0	50,0	9,0	0,71	**P1C-4NMB**
80	190,0	16,0	30,0	80,0	95,0	126,0	63,0	12,0	1,59	**P1C-4PMB**
100	205,0	16,0	35,0	80,0	115,0	150,0	75,0	14,0	2,19	**P1C-4QMB**
125	245,0	20,0	45,0	80,0	140,0	180,0	90,0	16,0	3,78	**P1C-4RMB**
160	180,0	20,0	60,0	80,0	180,0	230,0	115,0	18,0	7,20	**PD23410**
200	300,0	25,0	70,0	80,0	220,0	270,0	135,0	22,0	12,20	**PD24924**
250	330,0	25,0	80,0	80,0	280,0	330,0	165,0	26,0	19,20	**PD25761**
320	370,0	30,0	90,0	80,0	340,0	400,0	200,0	33,0	38,00	**KL9140**

Dimensions for cylinders without piston rod protusion or with rod lock unit

Foot brackets MS1



Intended for fixed mounting of cylinder. Foot bracket can be fitted to front and rear end covers of cylinder.

Materials
Foot bracket: Passivated steel
Mounting screws acc. to DIN 912: Zinc-plated steel 8.8

Supplied in pairs with mounting screws for attachment to cylinder.

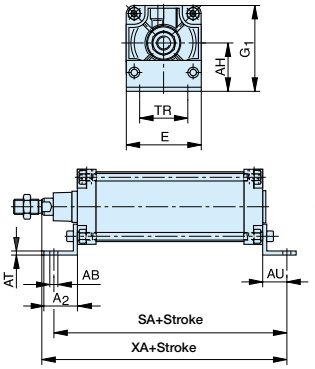

Bore mm	E mm	TR mm	AH mm	G1 mm	AT mm	A2 mm	ØAB mm	SA mm	XA mm	AU mm	Weight kg	Order code
32	45,0	32,0	32,0	56,0	4,5	34,0	7,0	142,0	144,0	24,0	0,06	**P1C-4KMF**
40	52,0	36,0	36,0	62,8	4,5	36,0	9,0	161,0	163,0	28,0	0,08	**P1C-4LMF**
50	65,0	45,0	45,0	77,6	5,5	45,0	9,0	170,0	175,0	32,0	0,16	**P1C-4MMF**
63	75,0	50,0	50,0	87,8	5,5	45,0	9,0	185,0	190,0	32,0	0,25	**P1C-4NMF**
80	95,0	63,0	63,0	110,5	6,5	55,0	12,0	210,0	215,0	41,0	0,50	**P1C-4PMF**
100	115,0	75,0	71,0	128,0	6,5	56,0	14,0	220,0	230,0	41,0	0,85	**P1C-4QMF**
125	140,0	90,0	90,0	159,5	8,0	67,0	16,0	250,0	270,0	45,0	1,48	**P1C-4RMF**
160	180,0	115,0	115,0	205,0	8,0	80,0	18,0	300,0	320,0	60,0	3,80	**PD70512**
200	220,0	135,0	135,0	245,0	9,0	100,0	22,0	320,0	345,0	70,0	5,00	**PD24792**
250	280,0	165,0	165,0	305,0	10,0	110,0	26,0	350,0	380,0	75,0	9,70	**PD25758**
320	340,0	200,0	200,0	370,0	23,0	125,0	33,0	390,0	470,0	85,0	17,00	**KL9139**

Weight per item
Dimensions for cylinders without piston rod protusion or with rod lock unit

Pivot bracket with rigid bearing AB7



Intended for flexible mounting of cylinder. The pivot bracket can be combined with clevis bracket MP2.

Materials
Pivot bracket: Ø 160-200: cast aluminium
Ø 250-320: cast steel

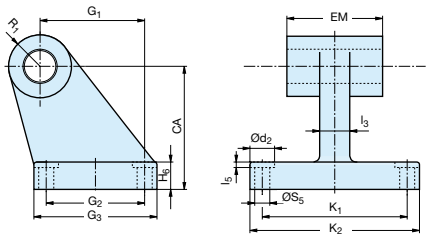

Bore mm	R1 mm	ØCX H7 mm	G1 mm	CA mm	H6 mm	G2 mm	G3 mm	EM mm	l3 mm	Ød2 mm	l5 mm	ØS5 mm	K1 mm	K2 mm	Weight kg	Order code Not anodised	Order code Black anodised
32	10,0	10,0	21,0	32,0	8,0	18,0	31,0	25,5	10,0	-	-	6,6	38,0	51,0	0,06	**P1C-4KMDB**	**P1C-4KMD**
40	11,0	12,0	24,0	36,0	10,0	22,0	35,0	27,0	15,0	-	-	6,6	41,0	54,0	0,08	**P1C-4LMDB**	**P1C-4LMD**
50	13,0	12,0	33,0	45,0	12,0	30,0	45,0	31,0	16,0	-	-	9,0	50,0	65,0	0,15	**P1C-4MMDB**	**P1C-4MMD**
63	15,0	16,0	37,0	50,0	12,0	35,0	50,0	39,0	16,0	-	-	9,0	52,0	67,0	0,20	**P1C-4NMDB**	**P1C-4NMD**
80	15,0	16,0	47,0	63,0	14,0	40,0	60,0	49,0	20,0	-	-	11,0	66,0	86,0	0,33	**P1C-4PMDB**	**P1C-4PMD**
100	19,0	20,0	55,0	71,0	15,0	50,0	70,0	59,0	20,0	-	-	11,0	76,0	96,0	0,49	**P1C-4QMDB**	**P1C-4QMD**
125	22,5	25,0	70,0	90,0	20,0	60,0	90,0	69,0	30,0	-	-	14,0	94,0	124,0	1,02	**P1C-4RMDB**	**P1C-4RMD**
160	31,5	30,0	97,0	115,0	25,0	88,0	126,0	90,0	36,0	20,0	4,0	14,0	118,0	156,0	6,50	**P1C-4SMDB**	-
200	31,5	30,0	105,0	135,0	30,0	90,0	130,0	90,0	40,0	26,0	4,0	18,0	122,0	162,0	8,00	**P1C-4TMDB**	-
250	40,0	40,0	128,0	165,0	35,0	110,0	160,0	110,0	45,0	33,0	4,5	22,0	150,0	200,0	13,50	**P1C-4UMDB**	-
320	45,0	45,0	150,0	200,0	40,0	122,0	186,0	120,0	55,0	-	-	26,0	170,0	234,0	21,90	**P1C-4VMDC**	-

Tel: +45 63 12 83 00 | Email: ps@hymatik.com | www.hymatik.com | Hvidkaervej 27a, DK-5250 Odense SV, Denmark

Cylinder mountings

Swivel eye bracket MP6



Intended for use together with clevis bracket GA

Material
Bracket: Cast aluminium
Swivel bearing acc. to DIN 648K: Hardened steel

Supplied complete with mounting screws for attachment to cylinder.

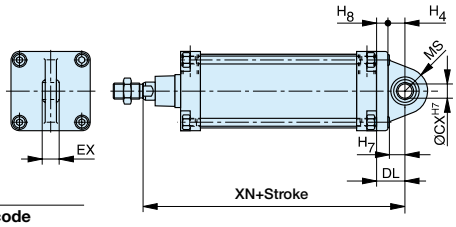

Bore mm	EX mm	XN mm	H8 mm	H4 mm	MS mm	ØCX H7 mm	Weight kg	Order code Not anodised	Order code Black anodised
32	14,0	142,0	10,0	12,0	16,0	10,0	0,10	**PD23843**	**P1C-4KMSA**
40	16,0	160,0	10,0	15,0	21,0	12,0	0,11	**PD23844**	**P1C-4LMSA**
50	16,0	170,0	11,0	16,0	23,0	12,0	0,20	**PD23845**	**P1C-4MMSA**
63	21,0	190,0	11,0	21,0	27,0	16,0	0,27	**PD23846**	**P1C-4NMSA**
80	21,0	210,0	15,0	21,0	29,0	16,0	0,52	**PD23847**	**P1C-4PMSA**
100	25,0	230,0	16,0	25,0	34,0	20,0	0,72	**PD23848**	**P1C-4QMSA**
125	31,0	275,0	20,0	30,0	40,0	25,0	1,53	**PD23849**	**P1C-4RMSA**
160	37,0	315,0	20,0	35,0	48,0	30,0	2,60	**PD23850**	-
200	43,0	335,0	24,0	36,0	47,0	30,0	11,30	**PD25766**	-
250	49,0	375,0	28,0	42,0	53,0	40,0	19,00	**PD25760**	-
320	60,0	420,0	30,0	50,0	63,0	45,0	30,30	**KL9136**	-

Dimensions for cylinders without piston rod protusion or with rod lock unit

Clevis bracket MP2



Intended for flexible mounting of cylinder. Clevis bracket MP2 can be combined with clevis bracket MP4.

Materials
Clevis bracket: Cast aluminium
Pin: Hardened steel
Circlips according to DIN 471: Spring steel
Mounting screws acc. to DIN 912: Zinc-plated steel 8.8

Supplied complete with mounting screws for attachment to cylinder

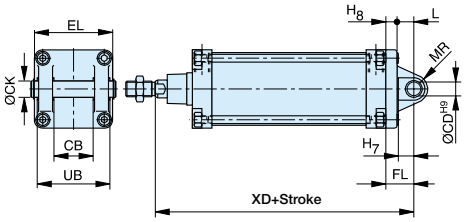

Bore mm	EL mm	XD mm	ØCD H9 mm	CB H14 mm	UB mm	H8 mm	L mm	MR mm	Weight kg	Order code Not anodised	Order code Black anodised
32	53,0	142,0	10,0	26,0	45,0	10,0	12,0	11,0	0,08	**P1C-4KMTB**	**P1C-4KMT**
40	60,0	160,0	12,0	28,0	52,0	10,0	15,0	13,0	0,11	**P1C-4LMTB**	**P1C-4LMT**
50	68,0	170,0	12,0	32,0	60,0	11,0	16,0	18,0	0,14	**P1C-4MMTB**	**P1C-4MMT**
63	78,0	190,0	16,0	40,0	70,0	11,0	21,0	18,0	0,29	**P1C-4NMTB**	**P1C-4NMT**
80	98,0	210,0	16,0	50,0	90,0	15,0	21,0	22,0	0,36	**P1C-4PMTB**	**P1C-4PMT**
100	118,0	230,0	20,0	60,0	110,0	16,0	25,0	22,0	0,64	**P1C-4QMTB**	**P1C-4QMT**
125	139,0	275,0	25,0	70,0	130,0	20,0	30,0	30,0	1,17	**P1C-4RMTB**	**P1C-4RMT**
160	172,0	315,0	30,0	90,0	170,0	20,0	35,0	30,0	2,60	**P1C-4SMTB**	-
200	172,0	335,0	30,0	90,0	170,0	25,0	35,0	31,0	4,10	**P1C-4TMTB**	-
250	280,0	375,0	40,0	110,0	200,0	25,0	45,0	41,0	7,10	**P1C-4UMTB**	-
320	340,0	420,0	45,0	120,0	220,0	30,0	50,0	54,0	31,0	**P1C-4VMTB**	-

Dimensions for cylinders without piston rod protusion or with rod lock unit

Clevis bracket MP4



Intended for flexible mounting of cylinder. Clevis bracket MP4 can be combined with clevis bracket MP2.

Materials
Clevis bracket: Cast aluminium
Mounting screws acc. to DIN 912: Zinc-plated steel 8.8

Supplied complete with mounting screws for attachment to cylinder.

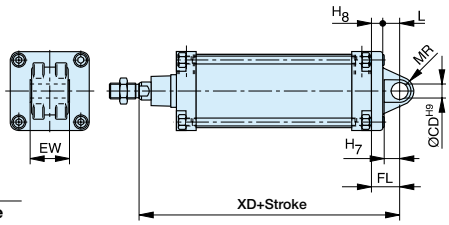

Bore mm	EW mm	XD mm	H8 mm	L mm	MR mm	ØCD mm	Weight kg	Order code Not anodised	Order code Black anodised
32	26,0	142,0	10,0	12,0	11,0	10,0	0,09	**PD23412**	**PD23412**
40	28,0	160,0	10,0	15,0	13,0	12,0	0,13	**PD23413**	**PD23413**
50	32,0	170,0	11,0	16,0	18,0	12,0	0,17	**PD23414**	**PD23414**
63	40,0	190,0	11,0	21,0	18,0	16,0	0,36	**PD23415**	**PD23415**
80	50,0	210,0	15,0	21,0	22,0	16,0	0,58	**PD23416**	**PD23416**
100	60,0	230,0	16,0	25,0	22,0	20,0	0,89	**PD23417**	**PD23417**
125	70,0	275,0	20,0	30,0	30,0	25,0	1,75	**PD23418**	**PD23418**
160	90,0	315,0	20,0	35,0	30,0	30,0	2,70	**PD22628**	**PD22628**
200	90,0	335,0	25,0	35,0	31,0	30,0	4,20	**PD24999**	**PD24999**
250	110,0	375,0	25,0	45,0	41,0	40,0	15,70	**PD25759**	**PD25759**
320	120,0	420,0	30,0	50,0	46,0	45,0	33,00	**KL9135**	**KL9135**

Dimensions for cylinders without piston rod protusion or with rod lock unit

Tel: +45 63 12 83 00 | Email: ps@hymatik.com | www.hymatik.com | Hvidkaervej 27a, DK-5250 Odense SV, Denmark

Cylinder mountings

Pivot brackets AT4 for MT* mounting trunnion



Intended for use together with intermediate trunnion MT4 or MT5 / MT6.

Material:
Pivot bracket:
Ø32-125 mm – Aluminium
Ø160-250 mm – Anodised aluminium
Ø 320 mm – steel

Bearing acc. to DIN 1850 C

Supplied in pairs.

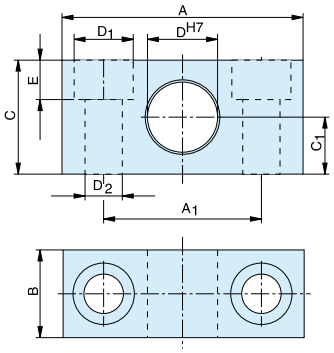

Bore mm	A mm	A1 mm	B mm	C mm	C1 mm	ØD H7 mm	ØD1 mm	ØD2 mm	E mm	Weight kg	**Order code Not anodised**
32	55	36	20	26	13	12	13,5	8,4	9,0	0,06	**PD23381**
40	55	36	20	26	13	16	13,5	8,4	9,0	0,06	**PD23382**
50	55	36	20	26	13	16	13,5	8,4	9,0	0,06	**PD23382**
63	65	42	25	30	15	20	16,5	10,5	11,0	0,10	**PD23383**
80	65	42	25	30	15	20	16,5	10,5	11,0	0,10	**PD23383**
100	75	50	28	40	20	25	19,0	13,0	13,0	0,18	**PD23384**
125	75	50	28	40	20	25	19,0	13,0	13,0	0,18	**PD23384**
160	92	60	35	60	30	32	26,0	18,0	17,0	0,35	**PD24425**
200	92	60	35	60	30	32	26,0	18,0	17,0	0,35	**PD24425**
250	140	90	40	70	35	40	33,0	22,0	21,5	0,50	**PD25763**
320	150	100	60	80	40	50	40,0	26,0	25,5	6,70	**KL9130**

Intermediate trunnion MT4



The trunnion is MT4 for P1D-T factory-fitted in the centre of the cylinder or at an optional location specified by the XV-measure - Combined with pivot brackets AT4.

Material:
Trunnion: Zinc plated steel
Trunnion centred
The central trunnion for the P1D-T is ordered with letter D in position 17 (no dimension specified in positions18-20).
e.g. P1D-T160MS-0500NDNNN
Trunnion with optional location

The trunnion for the P1D-T is ordered with letter G in position 17 and desired XV-measure (3-digit measure in mm) in positions 18-20. e.g. P1D-T160MS-0500NG300

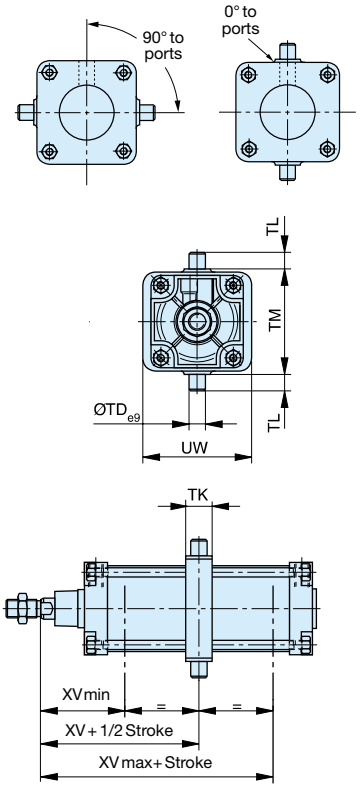

Bore mm	TK mm	TL h14 mm	TM h14 mm	ØTD e9 mm	XV min mm	XV mm	XV max mm	Weight kg
32	15	12	50	12	62,0	73,0	84,0	0,13
40	20	16	63	16	73,0	82,5	92,0	0,31
50	20	16	75	16	80,5	90,0	99,5	0,37
63	25	20	90	20	89,0	97,5	106,0	0,69
80	25	20	110	20	98,0	110,0	122,0	0,89
100	30	25	132	25	110,5	120,0	129,5	1,58
125	32	25	180	25	132,0	145,0	158,0	2,60
160	45	32	200	32	150,0	170,0	190,0	6,10
200	50	32	250	32	165,0	185,0	205,0	8,10
250	55	40	320	40	195,0	205,0	210,0	14,8
320	65	50	400	50	210,0	230,0	250,0	16,0

Important: If the cylinder is ordered with a piston rod protusion (WH dimension), please add this extra length to XVmin, XV and XVmax.

Tel: +45 63 12 83 00 | Email: ps@hymatik.com | www.hymatik.com | Hvidkaervej 27a, DK-5250 Odense SV, Denmark

Piston rod mountings

Swivel rod eye AP6



Swivel rod eye for articulated mounting of cylinder.
Swivel rod eye can be combined with clevis bracket GA.
Maintenance-free.

Material:
Swivel rod eye: Zinc-plated steel
Swivel bearing according to DIN 648K: Hardened steel

Swivel rod eye: Stainless steel
Swivel bearing according to DIN 648K: Hardened steel

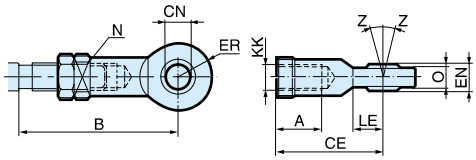

According to ISO 8139

Bore mm	A mm	B min mm	B max mm	CE mm	ØCN H9 mm	EN h12 mm	ER mm	KK mm	LE min mm	N mm	O mm	Z mm	Weight kg	Order code	Order code Stainless steel
32	20	48,0	55	43	10	14	14	M10x1,25	15	17	10,5	12°	0,08	**P1C-4KRS**	**P1S-4JRT**
40	22	56,0	62	50	12	16	16	M12x1,25	17	19	12,0	12°	0,12	**P1C-4LRS**	**P1S-4LRT**
50	28	72,0	80	64	16	21	21	M16x1,5	22	22	15,0	15°	0,25	**P1C-4MRS**	**P1S-4MRT**
63	28	72,0	80	64	16	21	21	M16x1,5	22	22	15,0	15°	0,25	**P1C-4MRS**	**P1S-4MRT**
80	33	87,0	97	77	20	25	25	M20x1,5	26	32	18,0	15°	0,46	**P1C-4PRS**	**P1S-4PRT**
100	33	87,0	97	77	20	25	25	M20x1,5	26	32	18,0	15°	0,46	**P1C-4PRS**	**P1S-4PRT**
125	51	123,5	137	110	30	37	35	M27x2	36	41	25,0	15°	1,28	**P1C-4RRS**	**P1S-4RRT**
160	56			125	35	43	40	M36x2	41	50	28,0		1,60	**KY6863**	-
200	56			125	35	43	40	M36x2	41	50	28,0		1,60	**KY6863**	-
250	60			142	40	49	45	M42x2	46	55	33,0		3,50	**KY6864**	-
320	65			160	50	60	58	M48x2	59	65	45,0		5,20	**KY9132**	-

Clevis AP2



Clevis for articulated mounting of cylinder.

Material:
Clevis, clip: Galvanized steel
Pin: Hardened steel

Clevis, clip: Stainless steel
Pin: Stainless steel

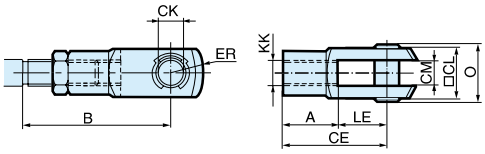

According to ISO 8140

Bore mm	A mm	B min mm	B max mm	CE mm	CK h11/e9 mm	CL mm	CM mm	ER mm	KK mm	LE mm	O mm	Weight kg	Order code	Order code Stainless steel
32	20	45,0	52	40	10	20	10	16	M10x1,25	20	28,0	0,09	**P1C-4KRC**	**P1S-4JRD**
40	24	54,0	60	48	12	24	12	19	M12x1,25	24	32,0	0,15	**P1C-4LRC**	**P1S-4LRD**
50	32	72,0	80	64	16	32	16	25	M16x1,5	32	41,5	0,35	**P1C-4MRC**	**P1S-4MRD**
63	32	72,0	80	64	16	32	16	25	M16x1,5	32	41,5	0,35	**P1C-4MRC**	**P1S-4MRD**
80	40	90,0	100	80	20	40	20	32	M20x1,5	40	50,0	0,75	**P1C-4PRC**	**P1S-4PRD**
100	40	90,0	100	80	20	40	20	32	M20x1,5	40	50,0	0,75	**P1C-4PRC**	**P1S-4PRD**
125	56	123,5	137	110	30	55	30	45	M27x2	54	72,0	2,10	**P1C-4RRC**	**P1S-4RRD**
160	72			144	35	70	36		M36x2	72		2,90	**KY6867**	-
200	72			144	35	70	36		M36x2	72		2,90	**KY6867**	-
250	84			168	40	85	40		M42x2	84		6,00	**KY6868**	-
320	96			192	50	90	50		M48x2	96		7,90	**KY9131**	-

Flexo coupling PM5



Flexo coupling for articulated mounting of piston rod. Flexo fitting is intended to take up axial angle errors within a range of ±4°.

Material
Flexo coupling, nut: Zinc-plated steel

Supplied complete with galvanized adjustment nut.

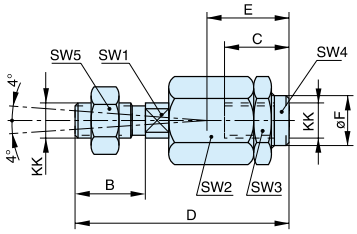

Bore mm	KK mm	B mm	C mm	D mm	E mm	ØF mm	SW1 mm	SW2 mm	SW3 mm	SW4 mm	SW5 mm	Weight kg	Order code
32	M10x1,25	20	23	73	31	21,0	12	30	30	19	17	0,21	**P1C-4KRF**
40	M12x1,25	24	23	77	31	21,0	12	30	30	19	19	0,22	**P1C-4LRF**
50	M16x1,5	32	32	108	45	33,5	19	41	41	30	24	0,67	**P1C-4MRF**
63	M16x1,5	32	32	108	45	33,5	19	41	41	30	24	0,67	**P1C-4MRF**
80	M20x1,5	40	42	122	56	33,5	19	41	41	30	30	0,72	**P1C-4PRF**
100	M20x1,5	40	42	122	56	33,5	19	41	41	30	30	0,72	**P1C-4PRF**
125	M27x2	54	48	147	51	39,0	24	55	55	32	41	1,80	**P1C-4RRF**
160	M36x2	72	50	241	110	56,0	36	75	75	50	55	5,10	**KY1139**
200	M36x2	72	50	241	110	56,0	36	75	75	50	55	5,10	**KY1139**
250	M42x2	82	88	271	120	-	36	80	80	60	65	7,90	**KY1140**
320	M48x2	82	88	271	120	-	42	80	80	60	75	7,90	**KY9133**

Tel: +45 63 12 83 00 | Email: ps@hymatik.com | www.hymatik.com | Hvidkaervej 27a, DK-5250 Odense SV, Denmark

	Flange MF1/MF2 [1]	Foot brackets MS1 [2]	Pivot bracket with rigid bearing AB7 [3]	Swivel eye bracket MP6 [4]	Clevis bracket MP2 [5]
					
Ø 32	P1C-4KMB	P1C-4KMF	P1C-4KMDB	PD23843	P1C-4KMTB
Ø 40	P1C-4LMB	P1C-4LMF	P1C-4LMDB	PD23844	P1C-4LMTB
Ø 50	P1C-4MMB	P1C-4MMF	P1C-4MMDB	PD23845	P1C-4MMTB
Ø 63	P1C-4NMB	P1C-4NMF	P1C-4NMDB	PD23846	P1C-4NMTB
Ø 80	P1C-4PMB	P1C-4PMF	P1C-4PMDB	PD23847	P1C-4PMTB
Ø 100	P1C-4QMB	P1C-4QMF	P1C-4QMDB	PD23848	P1C-4QMTB
Ø 125	P1C-4RMB	P1C-4RMF	P1C-4RMDB	PD23849	P1C-4RMTB
Ø 160	PD23410	PD70512	P1C-4SMDB	PD23850	P1C-4SMTB
Ø 200	PD24924	PD24792	P1C-4TMDB	PD25766	P1C-4TMTB
Ø 250	PD25761	PD25758	P1C-4UMDC	PD25760	P1C-4UMTB
Ø 320	KL9140	KL9139	P1C-4VMDC	KL9136	P1C-4VMTB

	Clevis bracket MP4 [6]	Clevis bracket AB6 [7]	Pivot bracket with swivel bearing CS7 [8]	3 and 4 positions flange JP1	Pivot brackets AT4 for MT* trunnion [10]
					
Ø 32	PD23412	P1C-4KMCB	KC5130	P1E-6KB0	PD23381
Ø 40	PD23413	P1C-4LMCB	KC5131	P1E-6LB0	PD23382
Ø 50	PD23414	P1C-4MMCB	KC5132	P1E-6MB0	PD23382
Ø 63	PD23415	P1C-4NMCB	KC5133	P1E-6NB0	PD23383
Ø 80	PD23416	P1C-4PMCB	KC5134	P1E-6PB0	PD23383
Ø 100	PD23417	P1C-4QMCB	KC5135	P1E-6QB0	PD23384
Ø 125	PD23418	P1C-4RMCB	KC5136		PD23384
Ø 160	PD22628				PD24425
Ø 200	PD24999				PD24425
Ø 250	PD25759				PD25763
Ø 320	KL9135				KL9130

	Flange trunnion MT5/MT6 [11]	Swivel rod eye AP6 [12]	Clevis AP2 [13]	Flexo coupling PM5 [14]	Zinc-plated nut MR9 [15]
					
Ø 32	P1D-4KMYF	P1C-4KRS	P1C-4KRC	P1C-4KRF	P14-4KRPZ
Ø 40	P1D-4LMYF	P1C-4LRS	P1C-4LRC	P1C-4LRF	P14-4LRPZ
Ø 50	P1D-4MMYF	P1C-4MRS	P1C-4MRC	P1C-4MRF	P14-4MRPZ
Ø 63	P1D-4NMYF	P1C-4MRS	P1C-4MRC	P1C-4MRF	P14-4MRPZ
Ø 80	P1D-4PMYF	P1C-4PRS	P1C-4PRC	P1C-4PRF	P14-4PRPZ
Ø 100	P1D-4QMYF	P1C-4PRS	P1C-4PRC	P1C-4PRF	P14-4PRPZ
Ø 125		P1C-4RRS	P1C-4RRC	P1C-4RRF	P14-4RRPZ
Ø 160		KY6863	KY6867	KY1139	
Ø 200		KY6863	KY6867	KY1139	
Ø 250		KY6864	KY6868	KY1140	
Ø 320		KL9132	KL9131	KL9133	

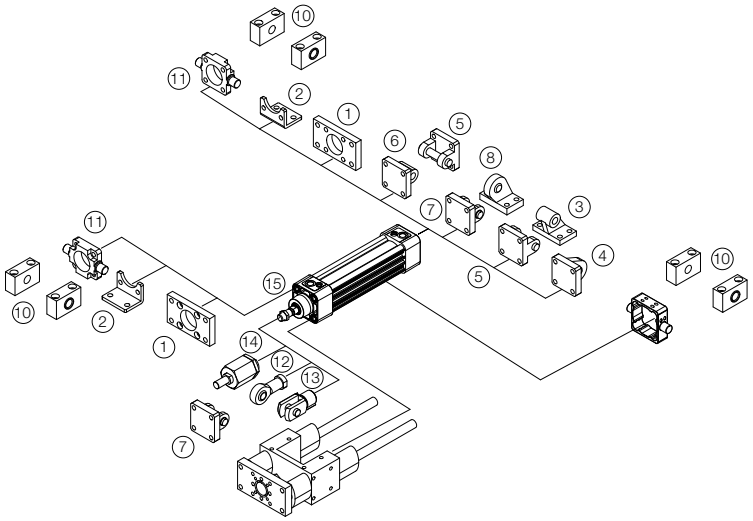

Tel: +45 63 12 83 00 | Email: ps@hymatik.com | www.hymatik.com | Hvidkaervej 27a, DK-5250 Odense SV, Denmark






P1D-X Pneumatic Cylinders

According to ISO 15552



High and Low Temperature Cylinders

P1D-X series contains cylinder versions for high and low temperature. These versions have material and sealing systems specially designed for their particular temperature ranges.
End covers and pistons are made entirely from metal, to give optimum function at **high** or **low** temperature in combination with seals made from specially tested materials and special grease.

- Bore sizes 32-125 mm.
- Double acting.
- Stainless steel piston rod.
- Robust and corrosion resistant.
- Adjustable air cushioning.
- Retained stainless steel cushioning screws.
- Wide range of mountings and drop-in sensors

Tel: +45 63 12 83 00 | Email: ps@hymatik.com | www.hymatik.com | Hvidkaervej 27a, DK-5250 Odense SV, Denmark

P1D-X High Temperature Cylinders

All seals in the high temperature version of P1D-X are developed and validated for continuous operation up to +150° C. The combination of the seal geometry and the FKM (DIN ISO 16299) material ensures reliable and long service life. Certain restrictions apply when choosing sensors due to the temperature range. High temperature cylinders have no magnetic piston and cannot be fitted with sensors (the magnetic field strength in high temperatures is too low to ensure correct reliable sensor function).

- Conforms to ISO 15552.
- Bore 32-125 mm.
- Double acting.
- Stainless steel piston rod.
- Adjustable air cushioning.
- Wide range of mountings.



Operating information

Working pressure:	Max 10 bar
Working temperature:	
High temp. version	**-10°C to +150°C**

For more information see www.parker.com/euro_pneumatic

P1D-X - High temperature (no magnetic)

Ø32mm - (G1/8)

Stroke mm	Order code
25	**P1D-X032MF-0025**
50	**P1D-X032MF-0050**
80	**P1D-X032MF-0080**
100	**P1D-X032MF-0100**
125	**P1D-X032MF-0125**
160	**P1D-X032MF-0160**
200	**P1D-X032MF-0200**
250	**P1D-X032MF-0250**
320	**P1D-X032MF-0320**
400	**P1D-X032MF-0400**
500	**P1D-X032MF-0500**

Ø40mm - (G1/4)

Stroke mm	Order code
25	**P1D-X040MF-0025**
50	**P1D-X040MF-0050**
80	**P1D-X040MF-0080**
100	**P1D-X040MF-0100**
125	**P1D-X040MF-0125**
160	**P1D-X040MF-0160**
200	**P1D-X040MF-0200**
250	**P1D-X040MF-0250**
320	**P1D-X040MF-0320**
400	**P1D-X040MF-0400**
500	**P1D-X040MF-0500**

Ø50mm - (G1/4)

Stroke mm	Order code
25	**P1D-X050MF-0025**
50	**P1D-X050MF-0050**
80	**P1D-X050MF-0080**
100	**P1D-X050MF-0100**
125	**P1D-X050MF-0125**
160	**P1D-X050MF-0160**
200	**P1D-X050MF-0200**
250	**P1D-X050MF-0250**
320	**P1D-X050MF-0320**
400	**P1D-X050MF-0400**
500	**P1D-X050MF-0500**

Ø63mm - (G3/8)

Stroke mm	Order code
25	**P1D-X063MF-0025**
50	**P1D-X063MF-0050**
80	**P1D-X063MF-0080**
100	**P1D-X063MF-0100**
125	**P1D-X063MF-0125**
160	**P1D-X063MF-0160**
200	**P1D-X063MF-0200**
250	**P1D-X063MF-0250**
320	**P1D-X063MF-0320**
400	**P1D-X063MF-0400**
500	**P1D-X063MF-0500**

Ø80mm - (G3/8)

Stroke mm	Order code
25	**P1D-X080MF-0025**
50	**P1D-X080MF-0050**
80	**P1D-X080MF-0080**
100	**P1D-X080MF-0100**
125	**P1D-X080MF-0125**
160	**P1D-X080MF-0160**
200	**P1D-X080MF-0200**
250	**P1D-X080MF-0250**
320	**P1D-X080MF-0320**
400	**P1D-X080MF-0400**
500	**P1D-X080MF-0500**

Ø100mm - (G1/2)

Stroke mm	Order code
25	**P1D-X100MF-0025**
50	**P1D-X100MF-0050**
80	**P1D-X100MF-0080**
100	**P1D-X100MF-0100**
125	**P1D-X100MF-0125**
160	**P1D-X100MF-0160**
200	**P1D-X100MF-0200**
250	**P1D-X100MF-0250**
320	**P1D-X100MF-0320**
400	**P1D-X100MF-0400**
500	**P1D-X100MF-0500**

Ø125mm - (G1/2)

Stroke mm	Order code
25	**P1D-X125MF-0025**
50	**P1D-X125MF-0050**
80	**P1D-X125MF-0080**
100	**P1D-X125MF-0100**
125	**P1D-X125MF-0125**
160	**P1D-X125MF-0160**
200	**P1D-X125MF-0200**
250	**P1D-X125MF-0250**
320	**P1D-X125MF-0320**
400	**P1D-X125MF-0400**
500	**P1D-X125MF-0500**

The cylinders are supplied complete with a zinc plated steel piston rod nut.

P1D-X Low Temperature Cylinders

All seals in the low temperature version of P1D-X are developed and validated for continuous operation down to -40° C. Polyurethane PUR seal technology and specifically formulated grease support performance and reliability for low temperature applications. As standard supplied with a magnetic ring in the piston for proximity sensing but please note that the sensors are normally specified for full performance to -25° C only.

- Conforms to ISO 15552.
- Bore 32-125 mm.
- Double acting.
- Stainless steel piston rod.
- Adjustable air cushioning.
- Wide range of mountings and drop-in sensors.



Operating information

Working pressure:	Max 10 bar
Working temperature:	
Low temp. version	**-40°C to +80°C**

P1D-X - Low temperature

Ø32mm - (G1/8)

Stroke mm	Order code
25	**P1D-X032ML-0025**
50	**P1D-X032ML-0050**
80	**P1D-X032ML-0080**
100	**P1D-X032ML-0100**
125	**P1D-X032ML-0125**
160	**P1D-X032ML-0160**
200	**P1D-X032ML-0200**
250	**P1D-X032ML-0250**
320	**P1D-X032ML-0320**
400	**P1D-X032ML-0400**
500	**P1D-X032ML-0500**

Ø40mm - (G1/4)

Stroke mm	Order code
25	**P1D-X040ML-0025**
50	**P1D-X040ML-0050**
80	**P1D-X040ML-0080**
100	**P1D-X040ML-0100**
125	**P1D-X040ML-0125**
160	**P1D-X040ML-0160**
200	**P1D-X040ML-0200**
250	**P1D-X040ML-0250**
320	**P1D-X040ML-0320**
400	**P1D-X040ML-0400**
500	**P1D-X040ML-0500**

Ø50mm - (G1/4)

Stroke mm	Order code
25	**P1D-X050ML-0025**
50	**P1D-X050ML-0050**
80	**P1D-X050ML-0080**
100	**P1D-X050ML-0100**
125	**P1D-X050ML-0125**
160	**P1D-X050ML-0160**
200	**P1D-X050ML-0200**
250	**P1D-X050ML-0250**
320	**P1D-X050ML-0320**
400	**P1D-X050ML-0400**
500	**P1D-X050ML-0500**

Ø63mm - (G3/8)

Stroke mm	Order code
25	**P1D-X063ML-0025**
50	**P1D-X063ML-0050**
80	**P1D-X063ML-0080**
100	**P1D-X063ML-0100**
125	**P1D-X063ML-0125**
160	**P1D-X063ML-0160**
200	**P1D-X063ML-0200**
250	**P1D-X063ML-0250**
320	**P1D-X063ML-0320**
400	**P1D-X063ML-0400**
500	**P1D-X063ML-0500**

Ø80mm - (G3/8)

Stroke mm	Order code
25	**P1D-X080ML-0025**
50	**P1D-X080ML-0050**
80	**P1D-X080ML-0080**
100	**P1D-X080ML-0100**
125	**P1D-X080ML-0125**
160	**P1D-X080ML-0160**
200	**P1D-X080ML-0200**
250	**P1D-X080ML-0250**
320	**P1D-X080ML-0320**
400	**P1D-X080ML-0400**
500	**P1D-X080ML-0500**

Ø100mm - (G1/2)

Stroke mm	Order code
25	**P1D-X100ML-0025**
50	**P1D-X100ML-0050**
80	**P1D-X100ML-0080**
100	**P1D-X100ML-0100**
125	**P1D-X100ML-0125**
160	**P1D-X100ML-0160**
200	**P1D-X100ML-0200**
250	**P1D-X100ML-0250**
320	**P1D-X100ML-0320**
400	**P1D-X100ML-0400**
500	**P1D-X100ML-0500**

Ø125mm - (G1/2)

Stroke mm	Order code
25	**P1D-X125ML-0025**
50	**P1D-X125ML-0050**
80	**P1D-X125ML-0080**
100	**P1D-X125ML-0100**
125	**P1D-X125ML-0125**
160	**P1D-X125ML-0160**
200	**P1D-X125ML-0200**
250	**P1D-X125ML-0250**
320	**P1D-X125ML-0320**
400	**P1D-X125ML-0400**
500	**P1D-X125ML-0500**

The cylinders are supplied complete with a zinc plated steel piston rod nut.

Parker Hannifin Corporation
Pneumatic Division - Europe

Tel: +45 63 12 83 00 | Email: ps@hymatik.com | www.hymatik.com | Hvidkaervej 27a, DK-5250 Odense SV, Denmark

P1D-X Metallic Scraper Cylinders

All seals in the metallic version of P1D-X are developed and validated for continuous operation down to -30° C. Polyurethane PUR seal technology and specifically formulated grease support performance and reliability for external applications. As standard supplied with a magnetic ring in the piston for proximity sensing but please note that the sensors are normally specified for full performance to -25° C only.



- Conforms to ISO 15552.
- Bore 32-125 mm.
- Double acting.
- Chromed plated steel piston rod.
- Adjustable air cushioning.
- Wide range of mountings and drop-in sensors.

Operating information

Working pressure:	Max 10 bar
Working temperature:	
Low temp. version	**-30ºC to +80ºC**

For more information see www.parker.com/euro_pneumatic

P1D-X - Low temperature, Metallic scraper

Ø32mm - (G1/8)

Stroke mm	Order code
25	**P1D-X032QK-0025**
50	**P1D-X032QK-0050**
80	**P1D-X032QK-0080**
100	**P1D-X032QK-0100**
125	**P1D-X032QK-0125**
160	**P1D-X032QK-0160**
200	**P1D-X032QK-0200**
250	**P1D-X032QK-0250**
320	**P1D-X032QK-0320**
400	**P1D-X032QK-0400**
500	**P1D-X032QK-0500**

Ø40mm - (G1/4)

Stroke mm	Order code
25	**P1D-X040QK-0025**
50	**P1D-X040QK-0050**
80	**P1D-X040QK-0080**
100	**P1D-X040QK-0100**
125	**P1D-X040QK-0125**
160	**P1D-X040QK-0160**
200	**P1D-X040QK-0200**
250	**P1D-X040QK-0250**
320	**P1D-X040QK-0320**
400	**P1D-X040QK-0400**
500	**P1D-X040QK-0500**

Ø50mm - (G1/4)

Stroke mm	Order code
25	**P1D-X050QK-0025**
50	**P1D-X050QK-0050**
80	**P1D-X050QK-0080**
100	**P1D-X050QK-0100**
125	**P1D-X050QK-0125**
160	**P1D-X050QK-0160**
200	**P1D-X050QK-0200**
250	**P1D-X050QK-0250**
320	**P1D-X050QK-0320**
400	**P1D-X050QK-0400**
500	**P1D-X050QK-0500**

Ø63mm - (G3/8)

Stroke mm	Order code
25	**P1D-X063QK-0025**
50	**P1D-X063QK-0050**
80	**P1D-X063QK-0080**
100	**P1D-X063QK-0100**
125	**P1D-X063QK-0125**
160	**P1D-X063QK-0160**
200	**P1D-X063QK-0200**
250	**P1D-X063QK-0250**
320	**P1D-X063QK-0320**
400	**P1D-X063QK-0400**
500	**P1D-X063QK-0500**

Ø80mm - (G3/8)

Stroke mm	Order code
25	**P1D-X080QK-0025**
50	**P1D-X080QK-0050**
80	**P1D-X080QK-0080**
100	**P1D-X080QK-0100**
125	**P1D-X080QK-0125**
160	**P1D-X080QK-0160**
200	**P1D-X080QK-0200**
250	**P1D-X080QK-0250**
320	**P1D-X080QK-0320**
400	**P1D-X080QK-0400**
500	**P1D-X080QK-0500**

Ø100mm - (G1/2)

Stroke mm	Order code
25	**P1D-X100QK-0025**
50	**P1D-X100QK-0050**
80	**P1D-X100QK-0080**
100	**P1D-X100QK-0100**
125	**P1D-X100QK-0125**
160	**P1D-X100QK-0160**
200	**P1D-X100QK-0200**
250	**P1D-X100QK-0250**
320	**P1D-X100QK-0320**
400	**P1D-X100QK-0400**
500	**P1D-X100QK-0500**

Ø125mm - (G1/2)

Stroke mm	Order code
25	**P1D-X125QK-0025**
50	**P1D-X125QK-0050**
80	**P1D-X125QK-0080**
100	**P1D-X125QK-0100**
125	**P1D-X125QK-0125**
160	**P1D-X125QK-0160**
200	**P1D-X125QK-0200**
250	**P1D-X125QK-0250**
320	**P1D-X125QK-0320**
400	**P1D-X125QK-0400**
500	**P1D-X125QK-0500**

The cylinders are supplied complete with a zinc plated steel piston rod nut.

Tel: +45 63 12 83 00 | Email: ps@hymatik.com | www.hymatik.com | Hvidkaervej 27a, DK-5250 Odense SV, Denmark

P1D-X Series

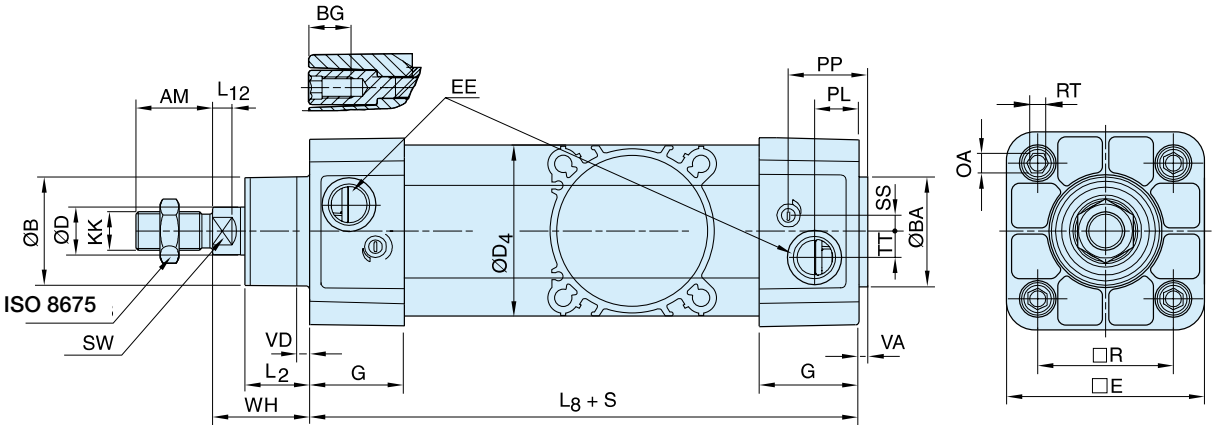

Dimensions

Cylinder bore mm	AM mm	B mm	BA mm	BG mm	D mm	D4 mm	E mm	EE mm	G mm	KK	L2 mm	L8 mm	L12 mm
32	22	30	30	16	12	45,0	48,0	G1/8	28,5	M10x1,25	16,8	94	6,0
40	24	35	35	16	16	52,0	53,5	G1/4	33,0	M12x1,25	19,0	105	6,5
50	32	40	40	16	20	60,7	65,2	G1/4	33,5	M16x1,5	24,0	106	8,0
63	32	45	45	16	20	71,5	75,5	G3/8	39,5	M16x1,5	24,3	121	8,0
80	40	45	45	17	25	86,7	95,0	G3/8	39,5	M20x1,5	30,0	128	10,0
100	40	55	55	17	25	106,7	114,0	G1/2	44,5	M20x1,5	34,0	138	14,0
125	54	60	60	20	32	134,0	139,0	G1/2	51,0	M27x2	45,0	160	18,0

Cylinder bore mm	OA mm	PL mm	PP mm	R mm	RT	SS mm	SW mm	TT mm	VA mm	VD mm	WH mm
32	6,0	14,0	24,2	32,5	M6	5,5	10	4,2	3,5	4,5	26
40	6,0	16,0	27,5	38,0	M6	8,0	13	5,5	3,5	4,5	30
50	8,0	14,0	29,3	46,5	M8	9,0	17	7,5	3,5	4,5	37
63	8,0	16,6	30,8	56,5	M8	6,5	17	10,0	3,5	4,5	37
80	6,0	16,8	33,5	72,0	M10	0	22	11,5	3,5	4,5	46
100	6,0	20,5	37,5	89,0	M10	0	22	14,5	3,5	4,5	51
125	8,0	23,3	45,8	110,0	M12	0	27	15,0	5,5	6,5	65

S=Stroke

Tolerances

Cylinder bore mm	B	BA	L_8 mm	L_9 mm	R mm	Stroke tolerance up to stroke 500 mm	Stroke tolerance for stroke over 500 mm
32	d11	d11	±0,4	±2	±0,5	+0,3/+2,0	+0,3/+3,0
40	d11	d11	±0,7	±2	±0,5	+0,3/+2,0	+0,3/+3,0
50	d11	d11	±0,7	±2	±0,6	+0,3/+2,0	+0,3/+3,0
63	d11	d11	±0,8	±2	±0,7	+0,3/+2,0	+0,3/+3,0
80	d11	d11	±0,8	±3	±0,7	+0,3/+2,0	+0,3/+3,0
100	d11	d11	±1,0	±3	±0,7	+0,3/+2,0	+0,3/+3,0
125	d11	d11	±1,0	±3	±1,1	+0,3/+2,0	+0,3/+3,0

For mountings refer to page 29.

Tel: +45 63 12 83 00 | Email: ps@hymatik.com | www.hymatik.com | Hvidkaervej 27a, DK-5250 Odense SV, Denmark

P1D-L Rod Locking Cylinders

P1D-L is a series of extremely compact rod lock cylinders for demanding applications. This version allows the piston rod to be locked in any position but can also be used as a brake (limits apply) thanks to the rigid design. With helical grooves on the precision clamping sleeves the locking function allows for applications where the piston rod is exposed to liquids and contamination.



- Available in 32 to 125 mm bores
- PUR seals for long service life
- Drop-in sensors
- Corrosion resistant design
- Magnetic piston as standard
- Full range of ISO mountings
- Lubricated with food grade grease

Operating information - P1D-L

Working pressure:	Max 10 bar
Working temperature:	-20°C to +80°C
Release pressure[1)]	Min 4 bar

[1)] Signal pressure to inlet port of lock unit

For more information see www.parker.com/euro_pneumatic

P1D-L - Dynamic Rod Lock

Ø32mm - (G1/8)

Stroke mm	Order code
25	P1D-L032MC-0025
40	P1D-L032MC-0040
50	P1D-L032MC-0050
80	P1D-L032MC-0080
100	P1D-L032MC-0100
125	P1D-L032MC-0125
160	P1D-L032MC-0160
200	P1D-L032MC-0200
250	P1D-L032MC-0250
320	P1D-L032MC-0320
400	P1D-L032MC-0400
500	P1D-L032MC-0500

Ø40mm - (G1/4)

Stroke mm	Order code
25	P1D-L040MC-0025
40	P1D-L040MC-0040
50	P1D-L040MC-0050
80	P1D-L040MC-0080
100	P1D-L040MC-0100
125	P1D-L040MC-0125
160	P1D-L040MC-0160
200	P1D-L040MC-0200
250	P1D-L040MC-0250
320	P1D-L040MC-0320
400	P1D-L040MC-0400
500	P1D-L040MC-0500

Ø50mm - (G1/4)

Stroke mm	Order code
25	P1D-L050MC-0025
40	P1D-L050MC-0040
50	P1D-L050MC-0050
80	P1D-L050MC-0080
100	P1D-L050MC-0100
125	P1D-L050MC-0125
160	P1D-L050MC-0160
200	P1D-L050MC-0200
250	P1D-L050MC-0250
320	P1D-L050MC-0320
400	P1D-L050MC-0400
500	P1D-L050MC-0500

Ø63mm - (G3/8)

Stroke mm	Order code
25	P1D-L063MC-0025
40	P1D-L063MC-0040
50	P1D-L063MC-0050
80	P1D-L063MC-0080
100	P1D-L063MC-0100
125	P1D-L063MC-0125
160	P1D-L063MC-0160
200	P1D-L063MC-0200
250	P1D-L063MC-0250
320	P1D-L063MC-0320
400	P1D-L063MC-0400
500	P1D-L063MC-0500

Ø80mm - (G3/8)

Stroke mm	Order code
25	P1D-L080MS-0025
40	P1D-L080MC-0040
50	P1D-L080MC-0050
80	P1D-L080MC-0080
100	P1D-L080MC-0100
125	P1D-L080MC-0125
160	P1D-L080MC-0160
200	P1D-L080MC-0200
250	P1D-L080MC-0250
320	P1D-L080MC-0320
400	P1D-L080MC-0400
500	P1D-L080MC-0500

Ø100mm - (G1/2)

Stroke mm	Order code
25	P1D-L100MC-0025
40	P1D-L100MC-0040
50	P1D-L100MC-0050
80	P1D-L100MC-0080
100	P1D-L100MC-0100
125	P1D-L100MC-0125
160	P1D-L100MC-0160
200	P1D-L100MC-0200
250	P1D-L100MC-0250
320	P1D-L100MC-0320
400	P1D-L100MC-0400
500	P1D-L100MC-0500

Ø125mm - (G1/2)

Stroke mm	Order code
25	P1D-L125MC-0025
40	P1D-L125MC-0040
50	P1D-L125MC-0050
80	P1D-L125MC-0080
100	P1D-L125MC-0100
125	P1D-L125MC-0125
160	P1D-L125MC-0160
200	P1D-L125MC-0200
250	P1D-L125MC-0250
320	P1D-L125MC-0320
400	P1D-L125MC-0400
500	P1D-L125MC-0500

The cylinders are supplied complete with a zinc plated steel piston rod nut.

Sensors



For sensors see page 77.

Tel: +45 63 12 83 00 | Email: ps@hymatik.com | www.hymatik.com | Hvidkaervej 27a, DK-5250 Odense SV, Denmark

P1D-L Series

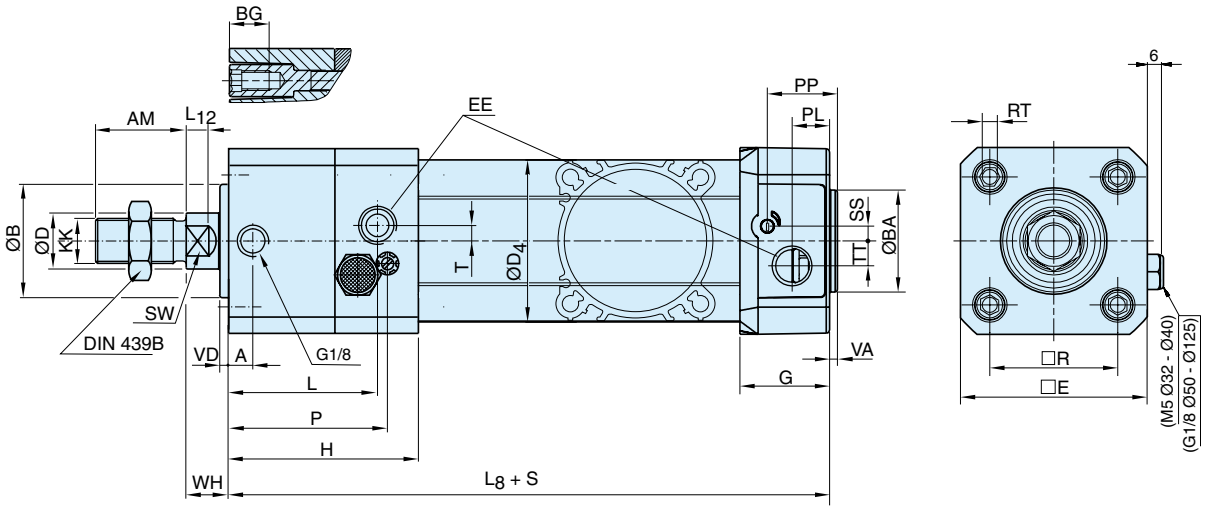

Dimensions

Cylinder bore mm	A mm	AM mm	B mm	BA mm	BG mm	D mm	D4 mm	E mm	EE mm	G mm	H mm	KK mm	L mm
32	18,5	22	30	30	16	12	45,0	50,0	G1/8	28,5	71,0	M10x1,25	53,0
40	20,0	24	35	35	16	16	52,0	57,4	G1/4	33,0	76,5	M12x1,25	56,0
50	21,0	32	40	40	16	20	60,7	69,4	G1/4	33,5	80,0	M16x1,5	65,0
63	30,0	32	45	45	16	20	71,5	82,4	G3/8	39,5	96,0	M16x1,5	76,5
80	35,0	40	45	45	17	25	86,7	99,4	G3/8	39,5	110,0	M20x1,5	89,0
100	54,0	40	55	55	17	25	106,7	116,0	G1/2	44,5	132,0	M20x1,5	112,0
125	65,5	54	60	60	20	32	134,0	139,0	G1/2	51,0	144,5	M27x2	124,5

Cylinder bore mm	L8 mm	L12 mm	P mm	PL mm	PP mm	R mm	RT	SS mm	SW mm	T mm	TT mm	VA mm	VD mm	WH mm
32	137	6,0	63,0	13,0	21,8	32,5	M6	4,0	10	4,5	4,5	3,5	4,5	15
40	149	6,5	67,5	14,0	21,9	38,0	M6	8,0	13	3,0	5,5	3,5	4,5	16
50	153	8,0	71,0	14,0	23,0	46,5	M8	4,0	17	5,5	7,5	3,5	5,0	17
63	178	8,0	87,0	16,4	27,4	56,5	M8	6,5	17	3,0	11,0	3,5	5,0	17
80	199	10,0	101,0	16,0	30,5	72,0	M10	0	22	6,0	15,0	3,5	4,0	20
100	226	14,0	122,0	18,0	35,8	89,0	M10	0	22	6,0	20,0	3,5	4,0	20
125	254	18,0	134,5	28,0	40,5	110,0	M12	0	27	6,0	17,5	5,5	6,0	27

S=Stroke

Tolerances

Cylinder bore mm	B	BA mm	L_8 mm	L_9 mm	R mm	Stroke tolerance up to stroke 500 mm	Stroke tolerance for stroke over 500 mm
32	d11	d11	±0,4	±2	±0,5	+0,3/+2,0	+0,3/+3,0
40	d11	d11	±0,7	±2	±0,5	+0,3/+2,0	+0,3/+3,0
50	d11	d11	±0,7	±2	±0,6	+0,3/+2,0	+0,3/+3,0
63	d11	d11	±0,8	±2	±0,7	+0,3/+2,0	+0,3/+3,0
80	d11	d11	±0,8	±3	±0,7	+0,3/+2,0	+0,3/+3,0
100	d11	d11	±1,0	±3	±0,7	+0,3/+2,0	+0,3/+3,0
125	d11	d11	±1,0	±3	±1,1	+0,3/+2,0	+0,3/+3,0

For mountings refer to page 29.

Tel: +45 63 12 83 00 | Email: ps@hymatik.com | www.hymatik.com | Hvidkaervej 27a, DK-5250 Odense SV, Denmark

P1D cylinder with static piston rod locking

The P1D cylinder is available in a version with piston rod locking, allowing the piston rod to be locked in any position. The lock unit, of the air/spring actuated type. With no signal pressure, the full force of the lock is applied to the piston rod. Lock units are available for P1D Standard, in bores 32-125 mm. Of course, the entire range of P1D accessories can also be used for the locking cylinder, which can be ordered with factory fitted accessories, sensors. However, the lock unit increases the overall length of the cylinder. Not certified for used in safety systems.



Operating information - P1D-H

Working pressure:	Max 10 bar
Working temperature:	-20°C to +80°C
Release pressure[1)]	Min 4 bar

[1)] Signal pressure to inlet port of lock unit

For more information see www.parker.com/euro_pneumatic

Cyl. bore mm	Stroke mm	Order code
32 Conn. G1/8	25	**P1D-H032MC-0025**
	40	**P1D-H032MC-0040**
	50	**P1D-H032MC-0050**
	80	**P1D-H032MC-0080**
	100	**P1D-H032MC-0100**
	125	**P1D-H032MC-0125**
	160	**P1D-H032MC-0160**
	200	**P1D-H032MC-0200**
	250	**P1D-H032MC-0250**
	320	**P1D-H032MC-0320**
	400	**P1D-H032MC-0400**
	500	**P1D-H032MC-0500**
40 Conn. G1/4	25	**P1D-H040MC-0025**
	40	**P1D-H040MC-0040**
	50	**P1D-H040MC-0050**
	80	**P1D-H040MC-0080**
	100	**P1D-H040MC-0100**
	125	**P1D-H040MC-0125**
	160	**P1D-H040MC-0160**
	200	**P1D-H040MC-0200**
	250	**P1D-H040MC-0250**
	320	**P1D-H040MC-0320**
	400	**P1D-H040MC-0400**
	500	**P1D-H040MC-0500**
50 Conn. G1/4	25	**P1D-H050MC-0025**
	40	**P1D-H050MC-0040**
	50	**P1D-H050MC-0050**
	80	**P1D-H050MC-0080**
	100	**P1D-H050MC-0100**
	125	**P1D-H050MC-0125**
	160	**P1D-H050MC-0160**
	200	**P1D-H050MC-0200**
	250	**P1D-H050MC-0250**
	320	**P1D-H050MC-0320**
	400	**P1D-H050MC-0400**
	500	**P1D-H050MC-0500**
63 Conn. G3/8	25	**P1D-H063MC-0025**
	40	**P1D-H063MC-0040**
	50	**P1D-H063MC-0050**
	80	**P1D-H063MC-0080**
	100	**P1D-H063MC-0100**
	125	**P1D-H063MC-0125**
	160	**P1D-H063MC-0160**
	200	**P1D-H063MC-0200**
	250	**P1D-H063MC-0250**
	320	**P1D-H063MC-0320**
	400	**P1D-H063MC-0400**
	500	**P1D-H063MC-0500**

Cyl. bore mm	Stroke mm	Order code
80 Conn. G3/8	25	**P1D-H080MC-0025**
	40	**P1D-H080MC-0040**
	50	**P1D-H080MC-0050**
	80	**P1D-H080MC-0080**
	100	**P1D-H080MC-0100**
	125	**P1D-H080MC-0125**
	160	**P1D-H080MC-0160**
	200	**P1D-H080MC-0200**
	250	**P1D-H080MC-0250**
	320	**P1D-H080MC-0320**
	400	**P1D-H080MC-0400**
	500	**P1D-H080MC-0500**
100 Conn. G1/2	25	**P1D-H100MC-0025**
	40	**P1D-H100MC-0040**
	50	**P1D-H100MC-0050**
	80	**P1D-H100MC-0080**
	100	**P1D-H100MC-0100**
	125	**P1D-H100MC-0125**
	160	**P1D-H100MC-0160**
	200	**P1D-H100MC-0200**
	250	**P1D-H100MC-0250**
	320	**P1D-H100MC-0320**
	400	**P1D-H100MC-0400**
	500	**P1D-H100MC-0500**
125 Conn. G1/2	25	**P1D-H125MC-0025**
	40	**P1D-H125MC-0040**
	50	**P1D-H125MC-0050**
	80	**P1D-H125MC-0080**
	100	**P1D-H125MC-0100**
	125	**P1D-H125MC-0125**
	160	**P1D-H125MC-0160**
	200	**P1D-H125MC-0200**
	250	**P1D-H125MC-0250**
	320	**P1D-H125MC-0320**
	400	**P1D-H125MC-0400**
	500	**P1D-H125MC-0500**

The cylinders are supplied complete with one zinc plated steel piston rod nut.

Parker Hannifin Corporation
Pneumatic Division - Europe

Tel: +45 63 12 83 00 | Email: ps@hymatik.com | www.hymatik.com | Hvidkaervej 27a, DK-5250 Odense SV, Denmark

P1D-H Series

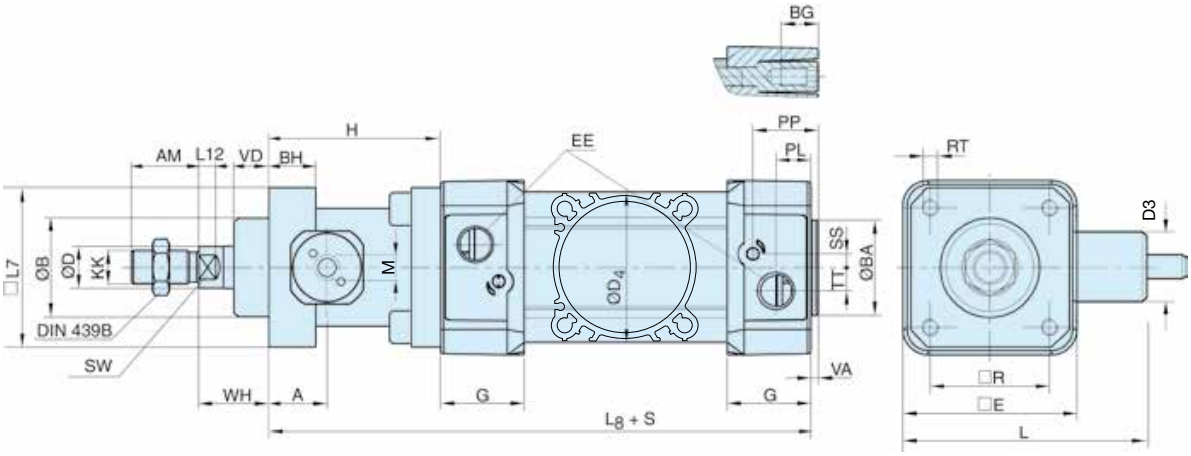

Dimensions (mm)

Cylinder bore mm	A mm	AM mm	B mm	BA mm	BG mm	BH mm	D mm	D3 mm	D4 mm	E mm	EE mm	G mm	H mm	KK
32	16,0	22	30	30	16	12	12	22,5	45,0	50,0	G1/8	28,5	48,0	M10x1,25
40	19,5	24	35	35	16	12	16	27,5	52,0	57,4	G1/4	33,0	55,0	M12x1,25
50	21,0	32	40	40	16	16	20	32,5	60,7	69,4	G1/4	33,5	70,0	M16x1,5
63	21,0	32	45	45	16	15	20	41,0	71,5	82,4	G3/8	39,5	70,0	M16x1,5
80	28,0	40	45	45	17	16	25	49,0	86,7	99,4	G3/8	39,5	90,0	M20x1,5
100	27,0	40	55	55	17	18	25	53,0	106,7	116,0	G1/2	44,5	92,0	M20x1,5
125	37,0	54	60	60	20	27	32	65,0	134,0	139,0	G1/2	51,0	122,0	M27x2

Cylinder bore mm	L mm	L7 mm	L8 mm	L12 mm	M	PL mm	PP mm	R mm	RT	SS mm	SW mm	TT mm	VA mm	VD mm	WH mm
32	94,0	48	142	6,0	M5	13,0	21,8	32,5	M6	4,0	10	4,5	3,5	10	26
40	102,5	56	160	6,5	G1/8	14,0	21,9	38,0	M6	8,0	13	5,5	3,5	10	30
50	119,5	68	176	8,0	G1/8	14,0	23,0	46,5	M8	4,0	17	7,5	3,5	12	37
63	138,0	82	203	8,0	G1/8	16,4	27,4	56,5	M8	6,5	17	11,0	3,5	12	37
80	152,0	100	218	10,0	G1/8	16,0	30,5	72,0	M10	0	22	15,0	3,5	20	46
100	193,5	120	230	14,0	G1/8	18,0	35,8	89,0	M10	0	22	20,0	3,5	23	51
125	223,5	140	282	18,0	G1/8	28,0	40,5	110,0	M12	0	27	17,5	5,5	32	65

S=Stroke

Tolerances (mm)

Cylinder bore mm	B	BA mm	L_8 mm	L_9 mm	R mm	Stroke tolerance up to stroke 500 mm	Stroke tolerance for stroke over 500 mm
32	d11	d11	±0,4	±2	±0,5	+0,3/+2,0	+0,3/+3,0
40	d11	d11	±0,7	±2	±0,5	+0,3/+2,0	+0,3/+3,0
50	d11	d11	±0,7	±2	±0,6	+0,3/+2,0	+0,3/+3,0
63	d11	d11	±0,8	±2	±0,7	+0,3/+2,0	+0,3/+3,0
80	d11	d11	±0,8	±3	±0,7	+0,3/+2,0	+0,3/+3,0
100	d11	d11	±1,0	±3	±0,7	+0,3/+2,0	+0,3/+3,0
125	d11	d11	±1,0	±3	±1,1	+0,3/+2,0	+0,3/+3,0

Tel: +45 63 12 83 00 | Email: ps@hymatik.com | www.hymatik.com | Hvidkaervej 27a, DK-5250 Odense SV, Denmark

P1E Rod Guidance Module

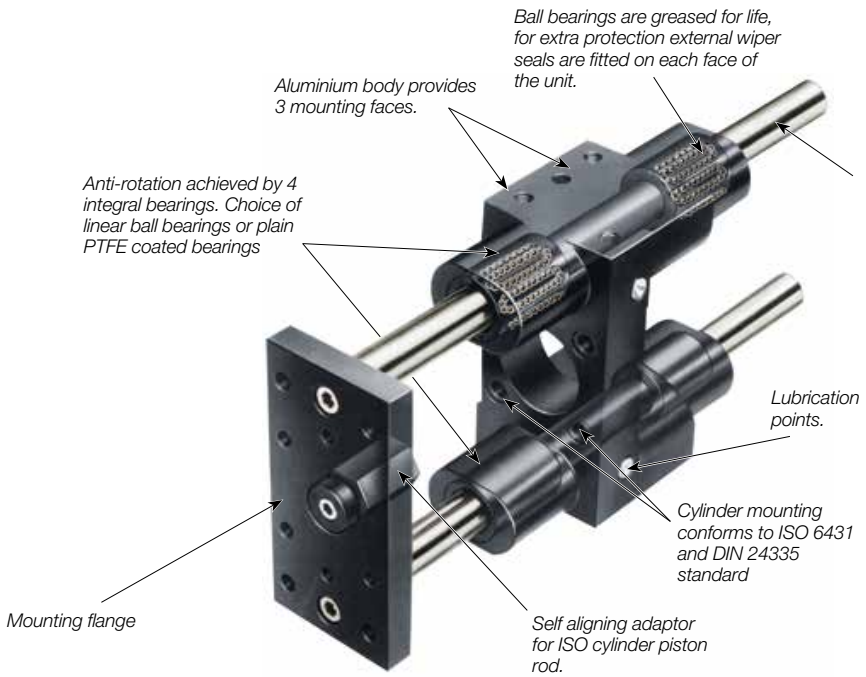

Installation on P1D-L with lock unit
If rotary control is to be retrofitted to a P1D-L with lock unit, the piston rod must be extended to provide the same WH dimensions as for the P1D base cylinder, as shown in the table below.

Cyl. dim mm	Piston rod extension on P1D-L with lock unit mm
32	11
40	14
50	20
63	20
80	26
100	31

P1E with rod guidance modules

The P1D series cylinders can be equipped with an external guiding device to prevent the piston rod from turning. The factory fitted guide gives a guided piston movement and enables the cylinder to take up turning moments on the piston rod, as well as greater transverse forces. The rod guidance is available with plain bearings or linear ball bearings and with H or U style. The bracket, which has pre-drilled mounting holes, is connected to the piston rod by means of a flexo coupling, which prevents the build-up of stresses in the cylinder. P1D cylinders with guiding devices are available with bores from 32 to 100 mm, and standard stroke lengths from 25 to 250 mm. Special stroke lengths up to 500 mm can also be obtained. Separate guiding device kits can be supplied on request according to the order key below.

Technical data

Working temperature	–20 °C to +80 °C

Material specifications, guidance modules

Body	Anodised aluminium
Guide bars, H style	Stainless steel for ball bearing chrome plated for plain bearing
Front plate	Anodised aluminium
Guide bars, U style	Stainless steel
Front plate	Zinc-plated steel
Bearings	Plain bearings Linear ball bearings

Order key for separate guidance module

P 1 E - 4 K R H - 0 1 0 0

	Bore size mm
K	32
L	40
M	50
N	63
P	80
Q	100

	Guide module type
H	H style, ball bearings
J	H style, plain bearings
K	U style, plain bearings

Stroke length (mm)
Same as for the cylinder
e.g. **0100** = 100 mm.

Tel: +45 63 12 83 00 | Email: ps@hymatik.com | www.hymatik.com | Hvidkaervej 27a, DK-5250 Odense SV, Denmark

Technical information 'H style'

Rod guide with ball bearings

Maximum load carried

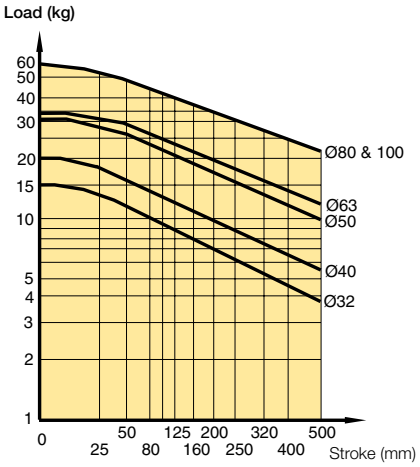

Graphs established at mid point of stroke

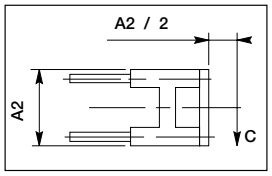

Maximum deflection/max load

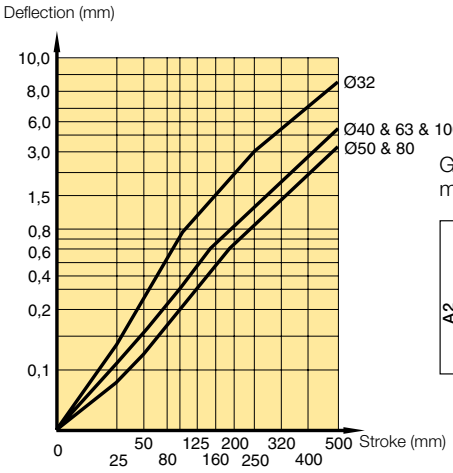

Graphs established at mid point of stroke

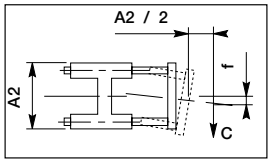

Maximum permissible torque (Nm)

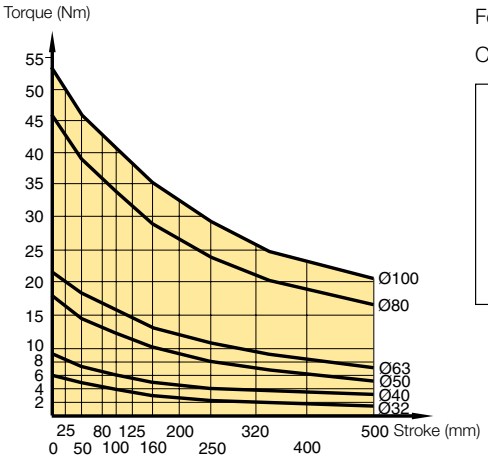

Formula:

C(Nm) = F(N) x L(m)

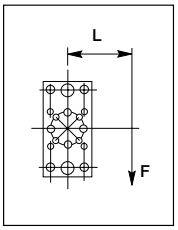

Rod guide with plain bearings

Maximum load carried

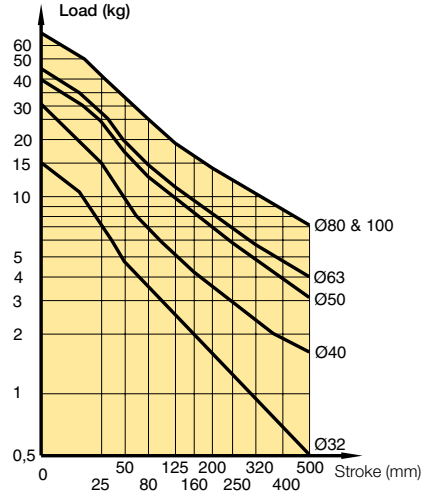

Maximum deflection/max load

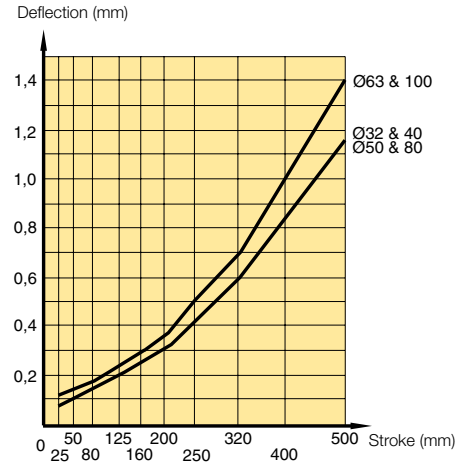

Maximum permissible torque (Nm)

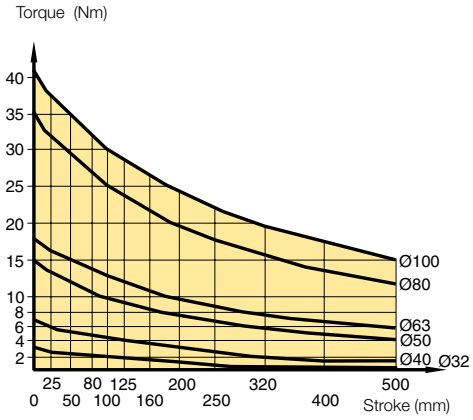

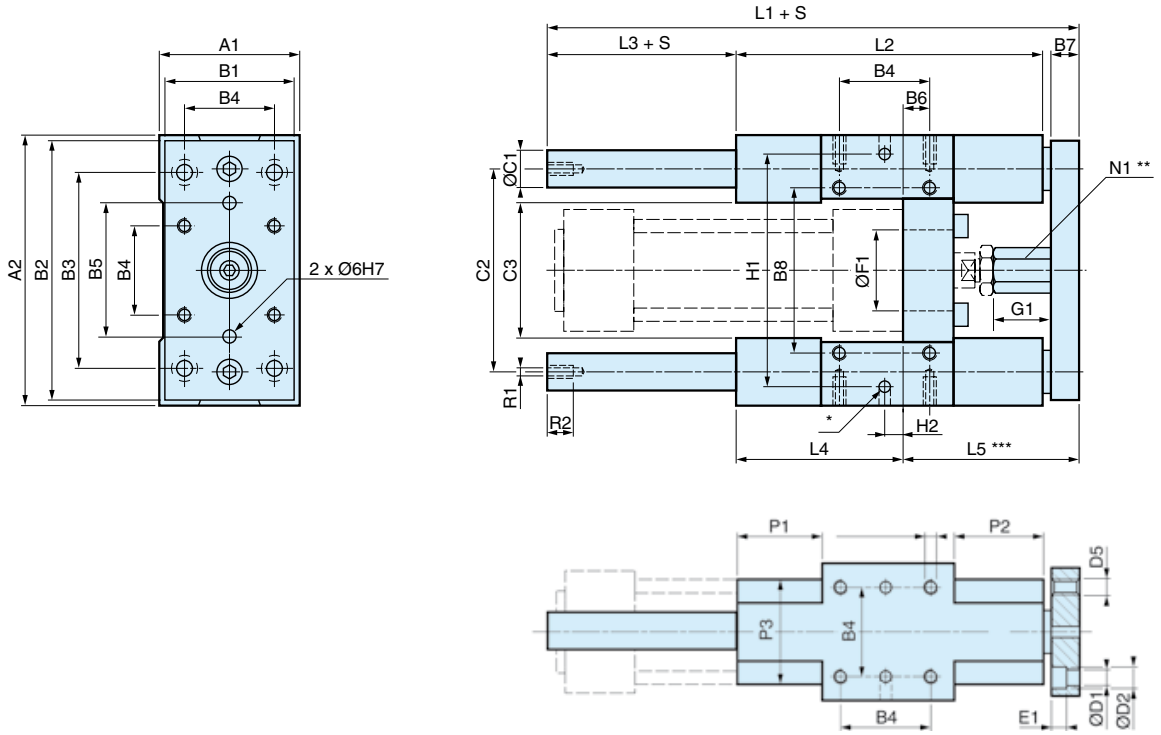

Dimensions, H style guidance modules

Cyl. bore mm	A_1 mm	A_2 mm	B_1 mm	B_2 mm	B_3 mm	B_4 mm	B_5 mm	B_6 mm	B_7 mm	B_8 mm	$ØC_1$ mm	C_2 mm	C_3 mm	$ØD_1$ mm	$ØD_2$ mm	D_5
32	50	97	45	90	78	32,5	50	4,2	12	61	12	73,5	50	6,6	11	M6
40	58	115	54	110	84	38,0	54	11,0	12	69	16	86,5	58	6,6	11	M6
50	70	137	63	130	100	46,5	72	18,8	15	85	20	103,5	70	8,4	15	M8
63	85	152	80	145	105	56,5	82	15,0	15	100	20	118,5	83	8,4	15	M8
80	105	189	100	180	130	72,0	106	21,0	20	130	25	147,0	102	10,5	18	M10
100	130	213	120	200	150	89,0	131	24,5	20	150	25	171,5	125	10,5	18	M10

Cyl. bore mm	E_1 mm	Ø $F_1^{+0,1/0}$ G_1 mm	L_1 mm	L_2 mm	L_3 mm	L_4 mm	L_5 mm	N_1 mm	$P_1^{\pm1}$ mm	$P_2^{\pm1}$ mm	P_3 mm	R_1 mm	R_2 mm	W mm	mm
32	7	30	17	150	120	15	71	64	17	36	31	40	M6	11	5
40	7	35	24	170	130	25	71	74	17	36	36	44	M6	11	6
50	9	40	27	197	150	24	79	89	24	42	44	50	M8	16	8
63	9	45	27	222	180	24	109	89	24	58	44	60	M8	16	8
80	11	45	32	247	200	24	113	110	30	50	52	70	M10	16	10
100	11	55	32	267	220	24	128	115	30	49	51	70	M10	16	10

Cyl. bore mm	$H_1^{\pm0,05}$ mm	H_2 mm	T mm	Weight at 0 mm stroke kg	Supplement weight per 10 mm stroke kg
32	81	11,7	12	0,970	0,018
40	99	8,0	12	1,550	0,032
50	119	4,2	16	2,560	0,050
63	132	13,0	16	3,570	0,050
80	166	15,0	20	6,530	0,078
100	190	20,5	20	8,760	0,078

S = Stroke length

* 6 hole Ø6 ^{H7}, depth $10^{+1/0}$
** Hexagon profile
*** Min adjustment=0, max.=W

Tel: +45 63 12 83 00 | Email: ps@hymatik.com | www.hymatik.com | Hvidkaervej 27a, DK-5250 Odense SV, Denmark

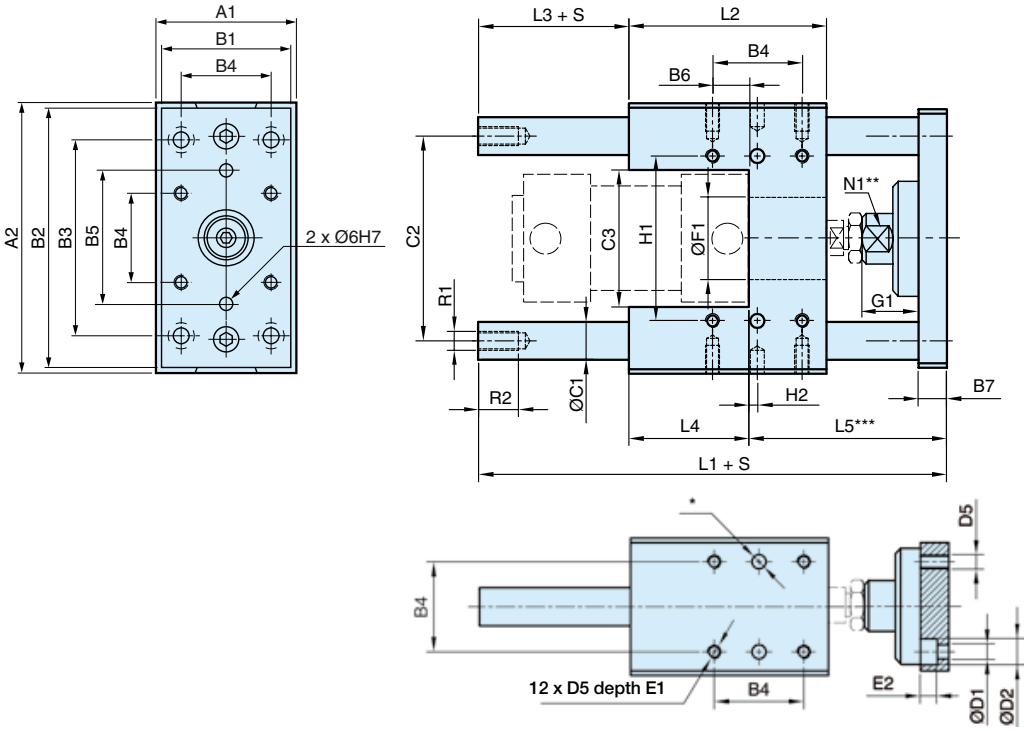

Dimensions, U style guidance modules

Cyl. bore. mm	A_1 mm	A_2 mm	B_1 mm	B_2 mm	B_3 mm	B_4 mm	B_5 mm	B_6 mm	B_7 mm	C_1 mm	C_2 mm	C_3 mm	D_1 mm	D_2 mm	D_5
32	50	97	45	90	78	32,5	50	18,0	12	12	74	50	6,6	11	M6
40	58	115	54	110	84	38,0	54	15,5	12	16	87	58	6,6	11	M6
50	70	137	63	130	100	46,5	72	19,5	15	20	104	70	9,0	15	M8
63	85	152	80	145	105	56,5	82	29,5	15	20	119	85	9,0	15	M8
80	105	189	100	180	130	72,0	106	39,0	20	25	148	105	11,0	18	M10
100	130	213	120	200	150	89,0	131	53,5	20	25	172	130	11,0	18	M10

Cyl. bore. mm	E_1 mm	E_2 mm	Ø $F_1^{+0,1/0}$ mm	G_1	L_1 mm	L_2 mm	L_3 mm	L_4 mm	L_5 mm	N_1 mm	R_1 mm	R_2	$H_1^{\pm0,05}$ mm	H_2 mm	W*** mm
32	10	6,5	30	30	133	72	14	44	75	13	M6	11	61	1,75	5
40	10	6,5	35	36	149	84	12	51	86	15	M8	12	69	3,50	5
50	13	9,0	40	42	175	100	12	60	103	22	M8	12	85	3,75	5
63	13	9,0	45	42	190	115	12	75	103	22	M8	12	100	1,25	5
80	16	11,0	45	49	238	162	0	112	126	27	M10	16	130	3,00	6
100	16	11,0	55	49	249	167	6	112	131	27	M10	16	150	8,50	6

Cyl. bore mm	Weight at 0 mm stroke kg	Supplement weight per 10 mm stroke kg
32	0,970	0,018
40	1,550	0,315
50	2,560	0,493
63	3,570	0,493
80	6,530	0,770
100	8,760	0,770

S = Stroke length

* 6 hole Ø6 ^{H7}, depth $10^{+1/0}$
** Width of jaw
*** Min adjustment=0, max.=W

Tel: +45 63 12 83 00 | Email: ps@hymatik.com | www.hymatik.com | Hvidkaervej 27a, DK-5250 Odense SV, Denmark

P8S-G sensors





The P1D sensors can easily be installed from the side in the sensor groove, at any position along the piston stroke. The sensors are completely recessed and thus mechanically protected. Choose between electronic or reed sensors and several cable lengths and 8 mm and M12 connectors. The same standard sensors are used for all P1D versions.

Electronic sensors

The electronic sensors are "Solid State", i.e. they have no moving parts at all. They are provided with short-circuit protection and transient protection as standard. The built-in electronics make the sensors suitable for applications with high on and off switching frequency, and where very long service life is required.

Reed sensors

The sensors are based on proven reed switches, which offer reliable function in many applications. Simple installation, a protected position on the cylinder and clear LED indication are important advantages of this range of sensors.

Technical data

Design	GMR (Giant Magnetic Resistance) magneto-resistive function
Installation	From side, down into the sensor groove, so-called drop-in
Outputs	PNP, normally open (also available in NPN design, normally closed, on request)
Voltage range	10-30 VDC 10-18 V DC, ATEX sensor
Ripple	max 10%
Voltage drop	max 2,5 V
Load current	max 100 mA
Internal consumption	max 10 mA
Actuating distance	min 9 mm
Hysteresis	max 1,5 mm
Repeatability accuracy	max 0,2 mm
On/off switching frequency	max 5 kHz
On switching time	max 2 ms
Off switching time	max 2 ms
Encapsulation	IP 67 (EN 60529)
Temperature range	–25 °C to +75 °C –20 °C to +45 °C, ATEX sensor
Indication	LED, yellow
Material housing	PA 12
Material screw	Stainless steel
Cable	PVC or PUR 3x0.25 mm^2 see order code respectively

Technical data

Design	Reed element
Mounting	From side, down into the sensor groove, so-called drop-in
Output	Normally open , or normally closed
Voltage range	10-30 V AC/DC or 10-120 V AC/DC 24-230 V AC/DC
Load current	max 500 mA for 10-30 V or max 100 mA for 10-120 V max 30 mA for 24-230 V
Breaking power (resistive)	max 6 W/VA
Actuating distance	min 9 mm
Hysteresis	max 1,5 mm
Repeatability accuracy	0,2 mm
On/off switching frequency	max 400 Hz
On switching time	max 1,5 ms
Off switching time	max 0,5 ms
Encapsulation	IP 67 (EN 60529)
Temperature range	–25 °C to +75 °C
Indication	LED, yellow
Material housing	PA12
Material screw	Stainless steel
Cable	PVC or PUR 3x0.14 mm^2 see order code respectively

Tel: +45 63 12 83 00 | Email: ps@hymatik.com | www.hymatik.com | Hvidkaervej 27a, DK-5250 Odense SV, Denmark

Electronic sensors

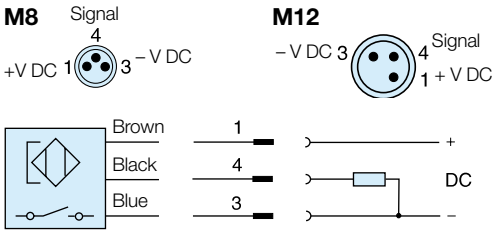

Sensor Dimensions

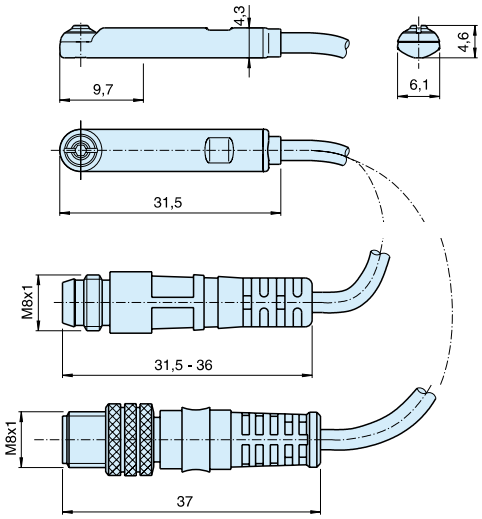

Sensor Installation - P1D-S / B / C / X P1Q / P1P

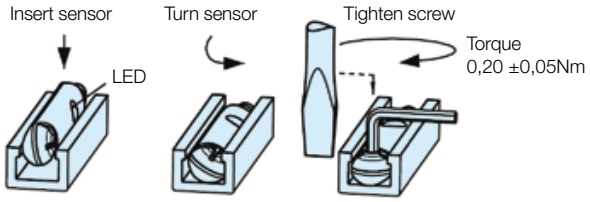

Sensor mounting - P1A-S 10 - 25mm - P8S-TMC01

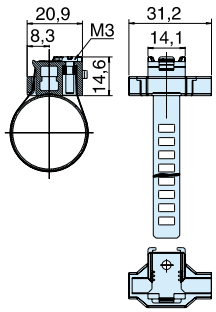

Reed sensors

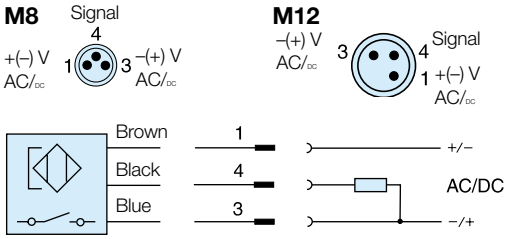

P8S-GCFPX

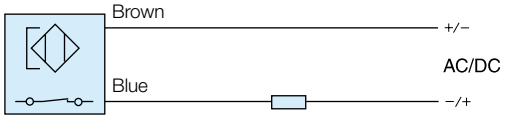

P8S-GRFLX / P8S-GRFLX2

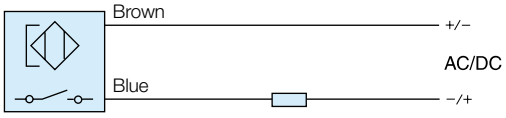

Sensor mounting - P1D-T 32 - 125mm P8S-TMA0X

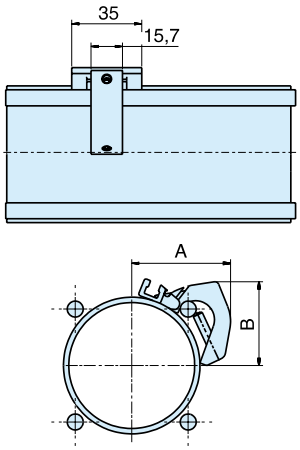

Cyl. bore mm	A mm	B mm
32	35	26
40	39	30
50	44	30
63	50	42
80	54	52
100	62	60
125	74	69

Sensor mounting - P1D-T 160 - 320mm PD48956

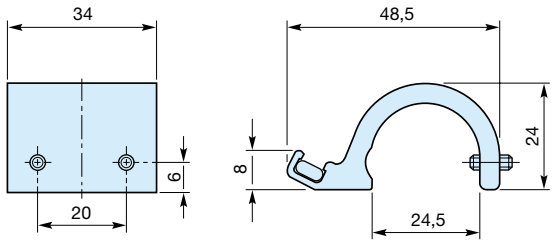

Order code
PD48956

Ordering data

Output/function	Cable/connector	Weight kg	Order code
Electronic sensors , 10-30 V DC			
PNP type, normally open	0,27 m PUR-cable and 8 mm snap-in male connector	0,007	**P8S-GPSHX**
PNP type, normally open	0,27 m PUR-cable and M12 screw male connector	0,015	**P8S-GPMHX**
PNP type, normally open	3 m PVC-cable without connector	0,030	**P8S-GPFLX**
PNP type, normally open	10 m PVC-cable without connector	0,110	**P8S-GPFTX**
Reed sensors , 10-30 V AC/DC			
Normally open	0,27 m PUR-cable and 8 mm snap-in male connector	0,007	**P8S-GSSHX**
Normally open	0,27 m PUR-cable and M12 screw male connector	0,015	**P8S-GSMHX**
Normally open	3 m PVC-cable without connector	0,030	**P8S-GSFLX**
Normally open	10 m PVC-cable without connector	0,110	**P8S-GSFTX**
Normally closed	5m PVC-cable without connector [1]	0,050	**P8S-GCFPX**
Reed sensors, 10-120 V AC/DC			
Normally open	3 m PVC-cable without connector	0,030	**P8S-GRFLX**
Reed sensorer, 24-230 V AC/DC			
Normally open	3 m PVC-cable without connector	0,030	**P8S-GRFLX2**

1) Without LED

Sensor mounting

Description	Weight kg	Order code
Sensor mounting for cylinder P1A cylinder bore Ø10 to Ø25 mm	0,07	**P8S-TMC01**
Double jointed adapter for cylinder P1D-T cylinder bore Ø32 to Ø125 mm	0,07	**P8S-TMA0X**
Sensor mounting for P1D-T 160 - 320mm	0,040	**PD48956**

Connecting cables with one connector

The cables have an integral snap-in female connector.



Type of cable	Cable/connector	Weight kg	Order code
Cables for sensors, complete with one female connector			
Cable, Flex PVC	3 m, 8 mm Snap-in connector	0,07	**9126344341**
Cable, Flex PVC	10 m, 8 mm Snap-in connector	0,21	**9126344342**
Cable, Polyurethane	3 m, 8 mm Snap-in connector	0,01	**9126344345**
Cable, Polyurethane	10 m, 8 mm Snap-in connector	0,20	**9126344346**
Cable, Polyurethane	5 m, M12 screw connector	0,07	**9126344348**
Cable, Polyurethane	10 m, M12 screw connector	0,20	**9126344349**

Male connectors for connecting cables

Cable connectors for producing your own connecting cables. The connectors can be quickly attached to the cable without special tools. Only the outer sheath of the cable is removed. The connectors are available for M8 and M12 screw connectors and meet protection class IP 65.



Connector	Weight kg	Order code
M8 screw connector	0,017	**P8CS0803J**
M12 screw connector	0,022	**P8CS1204J**

For ATEX specific products contact Sales Office









P1A Pneumatic Mini ISO Cylinders

According to ISO 6432



The P1A range of cylinders is intended for use in a wide range of applications. The cylinders are particularly suitable for lighter duties in the packaging, food and textile industries.
Hygienic design, the use of corrosion-resistant materials and initial lubrication with our food-grade grease makes the cylinders suitable for food industry applications.

- **Mini cylinder according to ISO 6432**
- **Available in 10 to 25 mm bores**
- **Corrosion resistant design and low weight construction**
- **Magnetic piston as standard**
- **End stroke buffers for long service life**

Tel: +45 63 12 83 00 | Email: ps@hymatik.com | www.hymatik.com | Hvidkaervej 27a, DK-5250 Odense SV, Denmark

Careful design and high quality manufacture throughout ensure long service life and optimum economy.
Mounting dimensions fully in accordance with ISO 6432 and CETOP RP52P greatly simplifies installation and world-wide interchangeability.



- Mini cylinder according to ISO 6432
- Available in 10 to 25 mm bores
- Corrosion resistant design and low weight construction
- Magnetic piston as standard
- End stroke buffers for long service life

Operating information

Working pressure: Max 10 bar
Temperature range: -20°C to +80°C Ø10-25mm

Design variants

High temperature
Ø12 and 16mm -10°C to +120°C Non-magnetic piston
Ø20 and 25mm -10°C to +150°C Non-magnetic piston

External seals
flourinated rubber -20°C to +80°C Magnetic piston

Prelubricated, further lubrication is not normally necessary.
If additional lubrication is introduced it must be continued.

Double acting buffer cushioning

Ø10mm - (M5)

Stroke mm	Order code
10	**P1A-S010DS-0010**
15	**P1A-S010DS-0015**
25	**P1A-S010DS-0025**
30	**P1A-S010DS-0030**
40	**P1A-S010DS-0040**
50	**P1A-S010DS-0050**
80	**P1A-S010DS-0080**
100	**P1A-S010DS-0100**
125	**P1A-S010DS-0125**

Ø12mm - (M5)

Stroke mm	Order code
10	**P1A-S012DS-0010**
15	**P1A-S012DS-0015**
25	**P1A-S012DS-0025**
30	**P1A-S012DS-0030**
40	**P1A-S012DS-0040**
50	**P1A-S012DS-0050**
80	**P1A-S012DS-0080**
100	**P1A-S012DS-0100**
125	**P1A-S012DS-0125**
160	**P1A-S012DS-0160**
200	**P1A-S012DS-0200**

Ø16mm - (M5)

Stroke mm	Order code
10	**P1A-S016DS-0010**
15	**P1A-S016DS-0015**
25	**P1A-S016DS-0025**
30	**P1A-S016DS-0030**
40	**P1A-S016DS-0040**
50	**P1A-S016DS-0050**
80	**P1A-S016DS-0080**
100	**P1A-S016DS-0100**
125	**P1A-S016DS-0125**
160	**P1A-S016DS-0160**
200	**P1A-S016DS-0200**

Ø20mm - (G1/8)

Stroke mm	Order code
10	**P1A-S020DS-0010**
15	**P1A-S020DS-0015**
25	**P1A-S020DS-0025**
30	**P1A-S020DS-0030**
40	**P1A-S020DS-0040**
50	**P1A-S020DS-0050**
80	**P1A-S020DS-0080**
100	**P1A-S020DS-0100**
125	**P1A-S020DS-0125**
160	**P1A-S020DS-0160**
200	**P1A-S020DS-0200**
250	**P1A-S020DS-0250**
320	**P1A-S020DS-0320**

Ø25mm - (G1/8)

Stroke mm	Order code
10	**P1A-S025DS-0010**
15	**P1A-S025DS-0015**
25	**P1A-S025DS-0025**
30	**P1A-S025DS-0030**
40	**P1A-S025DS-0040**
50	**P1A-S025DS-0050**
80	**P1A-S025DS-0080**
100	**P1A-S025DS-0100**
125	**P1A-S025DS-0125**
160	**P1A-S025DS-0160**
200	**P1A-S025DS-0200**
250	**P1A-S025DS-0250**
320	**P1A-S025DS-0320**

Cylinders are supplied complete with neck mounting and piston rod nuts.
Cylinders with Through piston rods are supplied with two piston rod nuts and one neck mounting nut.

Sensors



For sensors see page 77.

Double acting adjustable cushioning

Ø16mm - (M5)

Stroke mm	Order code
20	**P1A-S016MS-0020**
25	**P1A-S016MS-0025**
30	**P1A-S016MS-0030**
40	**P1A-S016MS-0040**
50	**P1A-S016MS-0050**
80	**P1A-S016MS-0080**
100	**P1A-S016MS-0100**
125	**P1A-S016MS-0125**
160	**P1A-S016MS-0160**
200	**P1A-S016MS-0200**

Ø20mm - (G1/8)

Stroke mm	Order code
20	**P1A-S020MS-0020**
25	**P1A-S020MS-0025**
30	**P1A-S020MS-0030**
50	**P1A-S020MS-0050**
80	**P1A-S020MS-0080**
100	**P1A-S020MS-0100**
125	**P1A-S020MS-0125**
160	**P1A-S020MS-0160**
200	**P1A-S020MS-0200**
250	**P1A-S020MS-0250**
320	**P1A-S020MS-0320**

Ø25mm - (G1/8)

Stroke mm	Order code
20	**P1A-S025MS-0020**
25	**P1A-S025MS-0025**
30	**P1A-S025MS-0030**
40	**P1A-S025MS-0040**
50	**P1A-S025MS-0050**
80	**P1A-S025MS-0080**
100	**P1A-S025MS-0100**
125	**P1A-S025MS-0125**
160	**P1A-S025MS-0160**
200	**P1A-S025MS-0200**
250	**P1A-S025MS-0250**
320	**P1A-S025MS-0320**

Parker Hannifin Corporation
Pneumatic Division - Europe

Tel: +45 63 12 83 00 | Email: ps@hymatik.com | www.hymatik.com | Hvidkaervej 27a, DK-5250 Odense SV, Denmark

Single acting push type (Spring return for retracted stroke)





Ø10mm - (M5)

Stroke mm	Order code
10	**P1A-S010SS-0010**
15	**P1A-S010SS-0015**
25	**P1A-S010SS-0025**
40	**P1A-S010SS-0040**
50	**P1A-S010SS-0050**
80	**P1A-S010SS-0080**

Ø12mm - (M5)

Stroke mm	Order code
10	**P1A-S012SS-0010**
15	**P1A-S012SS-0015**
25	**P1A-S012SS-0025**
40	**P1A-S012SS-0040**
50	**P1A-S012SS-0050**
80	**P1A-S012SS-0080**

Ø16mm - (M5)

Stroke mm	Order code
10	**P1A-S016SS-0010**
15	**P1A-S016SS-0015**
25	**P1A-S016SS-0025**
40	**P1A-S016SS-0040**
50	**P1A-S016SS-0050**
80	**P1A-S016SS-0080**

Ø20mm - (G1/8)

Stroke mm	Order code
10	**P1A-S020SS-0010**
15	**P1A-S020SS-0015**
25	**P1A-S020SS-0025**
50	**P1A-S020SS-0050**
80	**P1A-S020SS-0080**

Ø25mm - (G1/8)

Stroke mm	Order code
10	**P1A-S025SS-0010**
15	**P1A-S025SS-0015**
25	**P1A-S025SS-0025**
40	**P1A-S025SS-0040**
50	**P1A-S025SS-0050**
80	**P1A-S025SS-0080**

Single acting pull type (Spring extended for advanced stroke)

Ø16mm - (M5)

Stroke mm	Order code
10	**P1A-S016TS-0010**
15	**P1A-S016TS-0015**
25	**P1A-S016TS-0025**
40	**P1A-S016TS-0040**
50	**P1A-S016TS-0050**

Ø20mm - (G1/8)

Stroke mm	Order code
10	**P1A-S020TS-0010**
15	**P1A-S020TS-0015**
25	**P1A-S020TS-0025**
50	**P1A-S020TS-0050**
80	**P1A-S020TS-0080**

Ø25mm - (G1/8)

Stroke mm	Order code
10	**P1A-S025TS-0010**
15	**P1A-S025TS-0015**
25	**P1A-S025TS-0025**
40	**P1A-S025TS-0040**
50	**P1A-S025TS-0050**
80	**P1A-S025TS-0080**

Design Variants

Double acting options



Double-acting adjustable cushioning — Ø16 - Ø25 (not for seal material type F)

Double-acting non-adjustable cushioning — Ø10 - Ø25



Double-acting, adjustable cushioning through rod — Ø16 - Ø25 (not for seal material type F)

Double-acting, non-adjustable cushioning through rod — Ø10 - Ø25

Single acting options



Single-acting, Spring return for retracted stroke. Non-adjustable cushioning — Ø10 - Ø25

Single-acting, Spring extended for advanced stroke Non-adjustable cushioning — Ø16 - Ø25

"U" style rod guidance modules, plain bearings

The P1A series cylinders can be equipped with an external guiding device to prevent the piston rod from turning. When fitted the guide provides a guided piston movement enabling the cylinder to resist turning moments on the piston rod, as well as greater transverse forces.



Tel: +45 63 12 83 00 | Email: ps@hymatik.com | www.hymatik.com | Hvidkaervej 27a, DK-5250 Odense SV, Denmark

Dimensions

Double and single acting cylinders

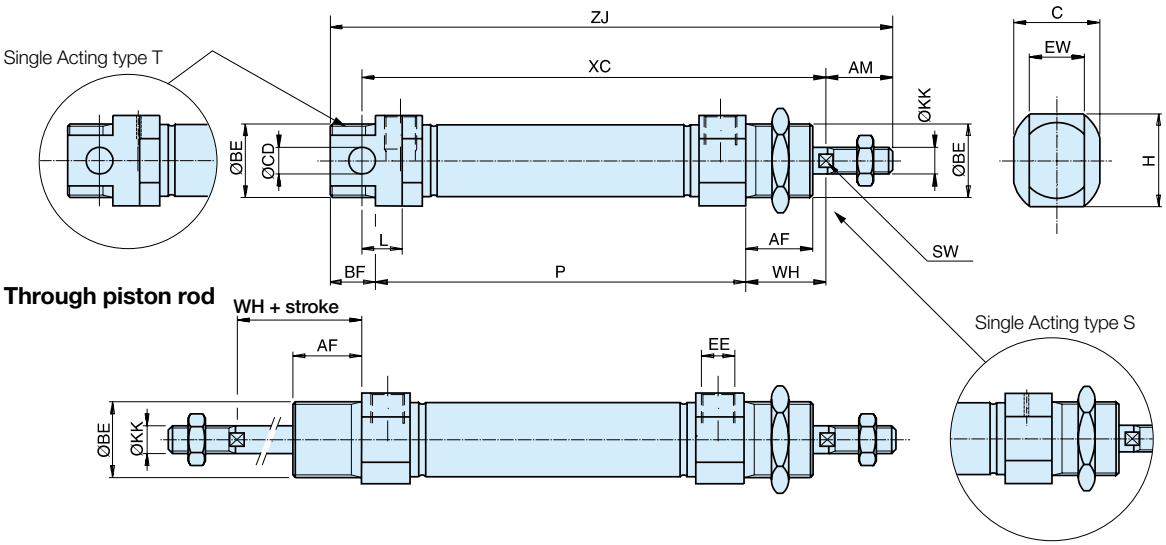

Through piston rod

Cylinder bore mm	AM 0/-2 mm	BE	AF mm	BF mm	C mm	CDH9 mm	EE	EW mm	H mm	KK	L mm	SW mm	WH±1,2 mm
10	12	M12x1,25	12	10	13,0	4	M5	8	13,0	M4	6	–	16
12	16	M16x1,5	18	13	17,8	6	M5	12	17,8	M6	9	5	22
16[1]	16	M16x1,5	18	13	17,8	6	M5	12	17,8	M6	9	5	22
16[2]	16	M16x1,5	18	13	23,8	6	M5	12	23,8	M6	9	5	22
20	20	M22x1,5	20	14	23,8	8	G1/8	16	23,8	M8	12	7	24
25	22	M22x1,5	22	14	26,8	8	G1/8	16	26,8	M10x1,25	12	9	28

1) P1A-S016DS/SS/TS
2) P1A-S016MS

Double acting cylinders

Cylinder bore mm	XC mm	ZJ mm	P mm
10	64 + stroke	84 + stroke	46 + stroke
12	75 + stroke	99 + stroke	48 + stroke
16	82 + stroke	104 + stroke	53 + stroke
20	95 + stroke	125 + stroke	67 + stroke
25	104 + stroke	132 + stroke	68 + stroke

Single-acting, spring return, type SS

Stroke/	10	15	25	40	50	80	10	15	25	40	50	80	10	15	25	40	50	80
Cylinder bore	XC	XC	XC	XC	XC	XC	ZJ	ZJ	ZJ	ZJ	ZJ	ZJ	P	P	P	P	P	P
mm	mm	mm	mm	mm	mm	mm	mm	mm	mm	mm	mm	mm	mm	mm	mm	mm	mm	mm
10	74	79	89	126	136	174	94	99	109	146	156	194	56	61	71	108	118	156
12	85	90	100	132	142	185	109	114	124	156	166	209	58	63	73	105	115	158
16	92	97	107	122	132	184	114	119	129	144	154	206	63	68	78	93	103	155
20	105	110	120	135	145	191	135	140	150	165	175	221	77	82	92	107	117	163
25	114	119	129	144	154	201	142	147	157	172	182	229	78	83	93	108	118	165

Single-acting, spring-extended, type TS

Stroke/	10	15	25	40	50	80	10	15	25	40	50	80	10	15	25	40	50	80
Cylinder bore	XC[3]	XC[3]	XC[3]	XC[3]	XC[3]	XC[3]	ZJ[3]	ZJ[3]	ZJ[3]	ZJ[3]	ZJ[3]	ZJ[3]	P	P	P	P	P	P
mm	mm	mm	mm	mm	mm	mm	mm	mm	mm	mm	mm	mm	mm	mm	mm	mm	mm	mm
16	107	112	122	137	147	–	129	134	144	159	169	–	78	83	93	108	118	–
20	120	125	135	150	160	195	150	155	165	180	190	225	92	97	107	122	132	167
25	129	134	144	159	169	205	157	162	172	187	197	233	93	98	108	123	133	169

3) With piston rod retracted, as shown in the dimension drawing
Length tolerances ±1 mm
Stroke length tolerances +1,5/0 mm

Tel: +45 63 12 83 00 | Email: ps@hymatik.com | www.hymatik.com | Hvidkaervej 27a, DK-5250 Odense SV, Denmark

Cylinder Mountings

Flange-MF8

Cylinder Ø mm	A mm	B mm	C mm	D mm	E mm	F mm	Order code
10	4,5	30	40	22	3	13	**P1A-4CMB**
12	5,5	40	52	30	4	18	**P1A-4DMB**
16	5,5	40	52	30	4	18	**P1A-4DMB**
20	6,6	50	66	40	5	19	**P1A-4HMB**
25	6,6	50	66	40	5	23	**P1A-4HMB**

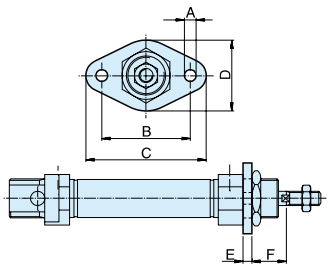

Foot-MS3

Cylinder Ø mm	A mm	B mm	C mm	D mm	E mm	F mm	G mm	H mm	I mm	Order code
10	4,5	16	25	35	3	24	26,0	16	11	**P1A-4CMF**
12	5,5	20	32	42	4	32	32,5	20	14	**P1A-4DMF**
16	5,5	20	32	42	4	32	32,5	20	14	**P1A-4DMF**
20	6,5	25	40	54	5	36	45,0	25	17	**P1A-4HMF**
25	6,5	25	40	54	5	40	45,0	25	17	**P1A-4HMF**

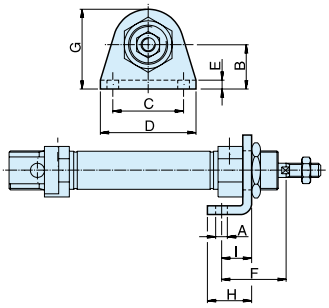

Cover trunnion

Cylinder Ø mm	A mm	B h14 mm	C mm	D mm	E1 mm	F e9 mm	G mm	H mm	Order code
10	12,5	26	38	20	9	4	6	10	**P1A-4CMJZ**
12	16,5	38	58	25	13	6	8	14	**P1A-4DMJZ**
16	16,5	38	58	25	13	6	8	14	**P1A-4DMJZ**
20	22,5	46	66	30	13	6	8	16	**P1A-4HMJZ**
25	22,5	46	66	30	13	6	8	20	**P1A-4HMJZ**

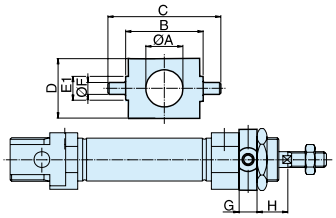

Cover trunnion Stainless steel

Cylinder Ø mm	A mm	B h14 mm	C mm	D mm	E mm	F e9 mm	G mm	H mm	Order code
10	12,5	26	38	20	8	4	6	10	**P1A-4CMJ**
12	16,5	38	58	25	10	6	8	14	**P1A-4DMJ**
16	16,5	38	58	25	10	6	8	14	**P1A-4DMJ**
20	22,5	46	66	30	10	6	8	16	**P1A-4HMJ**
25	22,5	46	66	30	10	6	8	20	**P1A-4HMJ**

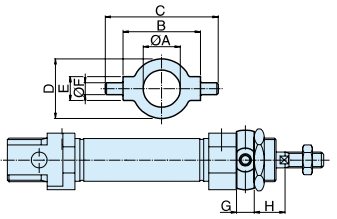

Clevis bracket AB3

Cylinder Ø mm	A mm	B mm	C mm	D mm	E mm	F mm	G mm	H mm	I °	J °	Order code
10	4,5	13	8	24	12,5	20	65,3	5	160	17	**P1A-4CMT**
12	5,5	18	12	27	15,0	25	73,0	7	170	15	**P1A-4DMT**
16	5,5	18	12	27	15,0	25	80,0	7	170	15	**P1A-4DMT**
20	6,5	24	16	30	20,0	32	91,0	10	165	10	**P1A-4HMT**
25	6,5	24	16	30	20,0	32	100,0	10	165	10	**P1A-4HMT**

S=stroke

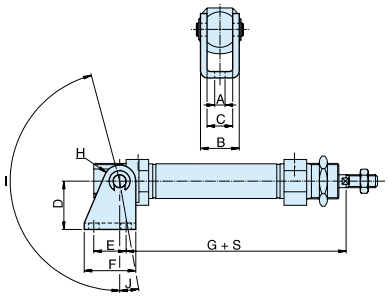

Stainless Mounting nut

Cylinder Ø mm	A mm	B mm	C	Order code
10	17	5	M12x1,25	**9126725405**
12	24	8	M16x1,50	**9126725406**
16	24	8	M16x1,50	**9126725406**
20	27	5	M22x1,50	**9126725407**
25	27	5	M22x1,50	**9126725407**

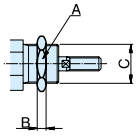

Tel: +45 63 12 83 00 | Email: ps@hymatik.com | www.hymatik.com | Hvidkaervej 27a, DK-5250 Odense SV, Denmark

Cylinder Mountings

Clevis AP2

Cylinder Ø mm	A mm	B	C mm	D mm	E mm	F mm	G mm	H mm	I mm	J mm	Order code
10	4	M4	2,2	8	8	5	16	4	22,0	2,0	**P1A-4CRC**
12	6	M6	3,2	12	12	7	24	6	31,0	3,0	**P1A-4DRC**
16	6	M6	3,2	12	12	7	24	6	31,0	3,0	**P1A-4DRC**
20	8	M8	4,0	16	16	10	32	8	40,5	3,5	**P1A-4HRC**
25	10	M10x1,25	5,0	20	20	12	40	10	49,0	3,0	**P1A-4JRC**

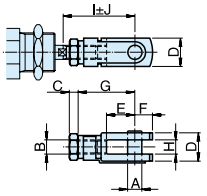

Swivel rod eye AP6

Cylinder Ø mm	A mm	B	C mm	D mm	E mm	F mm	G mm	H mm	I mm	J mm	K mm	L mm	Order code
10	5	M4	2,2	8	10	9	27	6,0	8	33,0	9	2,0	**P1A-4CRS**
12	6	M6	3,2	9	10	10	30	6,8	9	38,5	11	1,5	**P1A-4DRS**
16	6	M6	3,2	9	10	10	30	6,8	9	38,5	11	1,5	**P1A-4DRS**
20	8	M8	4,0	12	12	12	36	9,0	12	46,0	14	2,0	**P1A-4HRS**
25	10	M10x1,25	5,0	14	14	14	43	10,5	15	52,5	17	2,5	**P1A-4JRS**

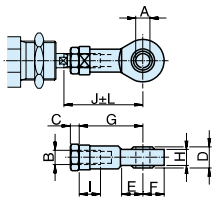

Stainless Rod nut

Cylinder Ø mm	D	F mm	E mm	Order code
10	M4	7	2,2	**9127385121**
12	M6	10	3,2	**9127385122**
16	M6	10	3,2	**9127385122**
20	M8	13	4,0	**9127385123**
25	M10x1,25	17	5,0	**9126725404**

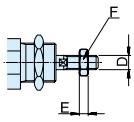

	Flange MF8	Foot bracket MS3	Cover trunnion	Cover trunnion Stainless steel	Stainless steel mounting nut
					
Ø 10	**P1A-4CMB**	**P1A-4CMF**	**P1A-4CMJZ**	**P1A-4CMJ**	**9126725405**
Ø 12	**P1A-4DMB**	**P1A-4DMF**	**P1A-4DMJZ**	**P1A-4DMJ**	**9126725406**
Ø 16	**P1A-4DMB**	**P1A-4DMF**	**P1A-4DMJZ**	**P1A-4DMJ**	**9126725406**
Ø 20	**P1A-4HMB**	**P1A-4HMF**	**P1A-4HMJZ**	**P1A-4HMJ**	**9126725407**
Ø 25	**P1A-4HMB**	**P1A-4HMF**	**P1A-4HMJZ**	**P1A-4HMJ**	**9126725407**

	Clevis bracket AB3	Clevis AP2	Swivel rod eye AP6	Stainless steel Rod nut
				
Ø 10	**P1A-4CMT**	**P1A-4CRC**	**P1A-4CRS**	**9127385121**
Ø 12	**P1A-4DMT**	**P1A-4DRC**	**P1A-4DRS**	**9127385122**
Ø 16	**P1A-4DMT**	**P1A-4DRC**	**P1A-4DRS**	**9127385122**
Ø 20	**P1A-4HMT**	**P1A-4HRC**	**P1A-4HRS**	**9127385123**
Ø 25	**P1A-4HMT**	**P1A-4JRC**	**P1A-4JRS**	**9126725404**

Tel: +45 63 12 83 00 | Email: ps@hymatik.com | www.hymatik.com | Hvidkaervej 27a, DK-5250 Odense SV, Denmark









All Round Cylinders 32 to 63 R Series



With its aluminium body construction and integral pivot mounting points the R32 - 63mm round cylinder series offers a lightweight versatile cylinder for a variety of applications. Designed and manufactured for quality and long service life while giving an economical package of options to compete in the competitive market environment.

- **Available in bores Ø32, Ø40, Ø50 and Ø63**
- **Double acting**
- **Adjustable cushioning**
- **Magnetic piston as standard**
- **Range of mounting options**
- **Other options available**

Tel: +45 63 12 83 00 | Email: ps@hymatik.com | www.hymatik.com | Hvidkaervej 27a, DK-5250 Odense SV, Denmark

With its aluminium body construction and integral pivot mounting points the R32 - 63mm round cylinder series offers a lightweight versatile cylinder for a variety of applications. Designed and manufactured for quality and long service life while giving an economical package of options to compete in the competitive market environment.



- Available in bores Ø32, Ø40, Ø50 and Ø63
- Double acting
- Adjustable cushioning
- Magnetic piston as standard
- Range of mounting options
- Other options available

Operating information

Working pressure: Max 10 bar
Temperature range: -10°C to +70°C

For more information see www.parker.com/euro_pneumatic

R32 - 63mm

Ø32mm - (G1/8)

Stroke mm	Order code
25	**PD46443-0025**
50	**PD46443-0050**
80	**PD46443-0080**
100	**PD46443-0100**
125	**PD46443-0125**
160	**PD46443-0160**
200	**PD46443-0200**
250	**PD46443-0250**
320	**PD46443-0320**
400	**PD46443-0400**
500	**PD46443-0500**

Ø40mm - (G1/4)

Stroke mm	Order code
25	**PD46445-0025**
50	**PD46445-0050**
80	**PD46445-0080**
100	**PD46445-0100**
125	**PD46445-0125**
160	**PD46445-0160**
200	**PD46445-0200**
250	**PD46445-0250**
320	**PD46445-0320**
400	**PD46445-0400**
500	**PD46445-0500**

Ø50mm - (G1/4)

Stroke mm	Order code
25	**PD46447-0025**
50	**PD46447-0050**
80	**PD46447-0080**
100	**PD46447-0100**
125	**PD46447-0125**
160	**PD46447-0160**
200	**PD46447-0200**
250	**PD46447-0250**
320	**PD46447-0320**
400	**PD46447-0400**
500	**PD46447-0500**

Ø63mm - (G3/8)

Stroke mm	Order code
25	**PD46449-0025**
50	**PD46449-0050**
80	**PD46449-0080**
100	**PD46449-0100**
125	**PD46449-0125**
160	**PD46449-0160**
200	**PD46449-0200**
250	**PD46449-0250**
320	**PD46449-0320**
400	**PD46449-0400**
500	**PD46449-0500**

Tel: +45 63 12 83 00 | Email: ps@hymatik.com | www.hymatik.com | Hvidkaervej 27a, DK-5250 Odense SV, Denmark

Characteristics

General features		Description			
Type		Round cylinder			
Series		R.... , RK....			
System		Piston rod cylinder			
R6..., RK6....		Double acting without cushioning			
R5....		Double acting with cushioning			
RDU6...		With through piston rod Double acting without cushioning			
Ambient temperature range	T_{min}	-10 °C	Note: When using below freezing point (°C) please contact as for advice		
	T_{max}	+70 °C			
Medium temperature range	T_{max}	+70 °C			
Medium		Filtered and lubricated or filtered and unlubricated compressed air			
Lubrication		Oil mist lubrication compatible with NBR and PU			
Material					
Cylinder barrel		Aluminium, anodised			
Front/rear end caps		Aluminium			
Piston rod		Steel, high-alloy			
Pneumatic Characteristics					
Nominal pressure	P_n	6 bar			
Piston diameter		32	40	50	63
Operating pressure range	P_{min}	1 bar			
	P_{max}	10 bar			
Port size		G1/8	G1/4	G1/4	G3/8
Piston rod diameter		12mm	16mm	20mm	20mm
Stroke length (mm)		For standard stroke lengths see order instructions, max. 500, longer strokes on request			
Cushioned stroke		At both ends progressively adjustable			
Cushioned stroke		22mm	27mm	28mm	28mm

Weight (mass) kg

Cylinder version	Cylinder diameter							
	Ø32		Ø40		Ø50		Ø63	
	1*	2*	1*	2*	1*	2*	1*	2*
Basic cylinder Typ R....	0.550	0.150	0.940	0.250	1.400	0.300	1.900	0.400
With through piston rod Typ RDU....	1.100	0.340	1.480	0.560	2.560	0.850	3.260	0.950

* 1 = Weight for cylinder with 100 mm stroke
2 = Weight for every additional 100 mm stroke length

Tel: +45 63 12 83 00 | Email: ps@hymatik.com | www.hymatik.com | Hvidkaervej 27a, DK-5250 Odense SV, Denmark

Dimensions – Basic Cylinder, Series R...., Ø 32 – 63 mm

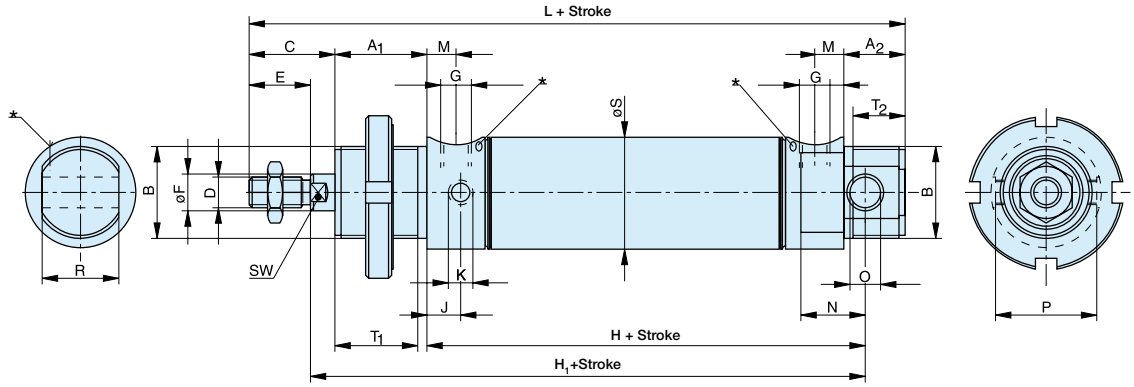

* adjustable end cushioning only for series R 5000

Dimensions – Basic Cylinder, Series RK...., Ø 32 – 63 mm

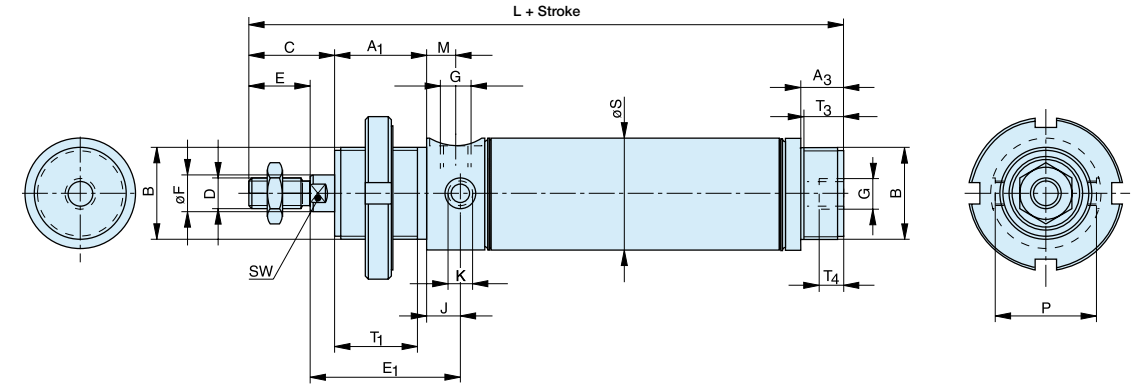

Dimension Table (mm) – Basic Cylinder, Series R...., RK...., RDU....

Cyl. Ø	A_1	A_2	A_3	B	C	D	E	E_1	ØF	G	H	H_1 +Stroke	J	K	l_8 +Stroke
32	30	19.5	14	M30x1.5	28	M10	20	49	12	G1/8	90.5	128.5	11	M8x1	83.5
40	35	21.5	16	M38x1.5	34	M12	24	57	16	G1/4	99.5	144.5	12	M10x1	89
50	38	25	18	M45x1.5	44	M16	32	63	20	G1/4	109.5	159.5	13	M12x1.5	93.5
63	38	24.5	18	M45x1.5	45	M16	32	64,5	20	G3/8	116.5	167.5	13.5	M14x1.5	101

Dimensions – Basic Cylinder with Through Piston Rod, Series RDU...., Ø 32 – 63 mm

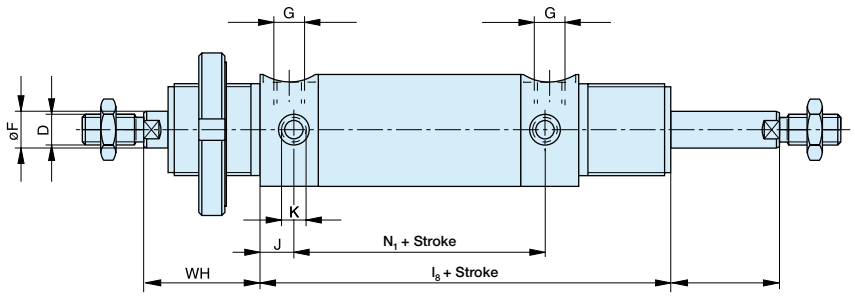

Cyl. Ø	L + Stroke R....	L + Stroke RK....	M	N	N_1 +Stroke	O	P	R_{h12}	ØS	T_1	T_2	T_3	T_4	SW	WH	WH + Stroke
32	160.5	138.5	9.5	21	61.5	10	33	25	35	27	16.5	12	8	10	38	38
40	181.5	156.5	11	24	65	12	42	30	43	32	17.5	14	12	14	45	45
50	205.5	179.5	11	27	67.5	14	52	35	54	35	21	16	12	17	50	50
63	215.5	186.5	12.5	28	74	16	62	35	67	35	20.5	16	12	17	51	51

Tel: +45 63 12 83 00 | Email: ps@hymatik.com | www.hymatik.com | Hvidkaervej 27a, DK-5250 Odense SV, Denmark

This range of stainless steel cylinders has been specially designed for use in difficult environments. Hygienic design, external seals of flourianted rubber and prelubrication with our food-industry-approved grease according to USDA-H1 make the cylinders particularly suitable for food industry use. All cylinders have magnetic pistons for proximity position sensing. Fixing dimensions to ISO 6432 simplify installation and make the cylinders physically interchangeable throughout the world.



- Mini - cylinders according to ISO 6432
- All stainless in 10 to 25 mm bores
- Magnetic piston as standard
- Double and single acting
- End stroke buffers for long service life
- Available with adjustable cushioning

Operating information

Working pressure: Max 10 bar
Temperature range: -20°C to +80°C Ø10-25mm

Prelubricated, further lubrication is not normally necessary.
If additional lubrication is introduced it must be continued.

For more information see www.parker.com/euro_pneumatic

Double acting buffer cushioning

Ø10mm - (M5)

Stroke mm	Order code
10	**P1S-S010DS-0010**
15	**P1S-S010DS-0015**
25	**P1S-S010DS-0025**
40	**P1S-S010DS-0040**
50	**P1S-S010DS-0050**
80	**P1S-S010DS-0080**
100	**P1S-S010DS-0100**
125	**P1S-S010DS-0125**

Ø12mm - (M5)

Stroke mm	Order code
10	**P1S-S012DS-0010**
15	**P1S-S012DS-0015**
25	**P1S-S012DS-0025**
40	**P1S-S012DS-0040**
50	**P1S-S012DS-0050**
80	**P1S-S012DS-0080**
100	**P1S-S012DS-0100**
125	**P1S-S012DS-0125**
160	**P1S-S012DS-0160**
200	**P1S-S012DS-0200**

Ø16mm - (M5)

Stroke mm	Order code
10	**P1S-S016DS-0010**
15	**P1S-S016DS-0015**
25	**P1S-S016DS-0025**
40	**P1S-S016DS-0040**
50	**P1S-S016DS-0050**
80	**P1S-S016DS-0080**
100	**P1S-S016DS-0100**
125	**P1S-S016DS-0125**
160	**P1S-S016DS-0160**
200	**P1S-S016DS-0200**

Ø20mm - (G1/8)

Stroke mm	Order code
10	**P1S-S020DS-0010**
15	**P1S-S020DS-0015**
25	**P1S-S020DS-0025**
40	**P1S-S020DS-0040**
50	**P1S-S020DS-0050**
80	**P1S-S020DS-0080**
100	**P1S-S020DS-0100**
125	**P1S-S020DS-0125**
160	**P1S-S020DS-0160**
200	**P1S-S020DS-0200**
250	**P1S-S020DS-0250**
320	**P1S-S020DS-0320**

Ø25mm - (G1/8)

Stroke mm	Order code
10	**P1S-S025DS-0010**
15	**P1S-S025DS-0015**
25	**P1S-S025DS-0025**
40	**P1S-S025DS-0040**
50	**P1S-S025DS-0050**
80	**P1S-S025DS-0080**
100	**P1S-S025DS-0100**
125	**P1S-S025DS-0125**
160	**P1S-S025DS-0160**
200	**P1S-S025DS-0200**
250	**P1S-S025DS-0250**
320	**P1S-S025DS-0320**

Double acting adjustable cushioning

Ø20mm - (G1/8)

Stroke mm	Order code
15	**P1S-S020MS-0015**
25	**P1S-S020MS-0025**
40	**P1S-S020MS-0040**
50	**P1S-S020MS-0050**
80	**P1S-S020MS-0080**
100	**P1S-S020MS-0100**
125	**P1S-S020MS-0125**
160	**P1S-S020MS-0160**
200	**P1S-S020MS-0200**
250	**P1S-S020MS-0250**
320	**P1S-S020MS-0320**

Ø25mm - (G1/8)

Stroke mm	Order code
15	**P1S-S025MS-0015**
25	**P1S-S025MS-0025**
40	**P1S-S025MS-0040**
50	**P1S-S025MS-0050**
80	**P1S-S025MS-0080**
100	**P1S-S025MS-0100**
125	**P1S-S025MS-0125**
160	**P1S-S025MS-0160**
200	**P1S-S025MS-0200**
250	**P1S-S025MS-0250**
320	**P1S-S025MS-0320**

Design Variants

Working temperatures

High temperature

Ø10 and Ø16mm	-10°C to +120°C Non-magnetic piston
Ø20 and Ø25mm	-10°C to +150°C Non-magnetic piston

Low temperature

Ø10, 12 and 16mm	-40°C to +60°C Non-magnetic piston



Double acting options

Effective end-cushioning
A version of ISO 6432 Ø10-Ø25 incorporates fixed end-cushioning, while the cylinders Ø20-Ø125 have pneumatic end-cushioning with adjusting screws for exact setting, permitting heavier loads and higher speeds for short cycle times.

Double-acting adjustable cushioning	Ø20 - Ø25 (not for seal material type F and L)
Double-acting non-adjustable cushioning	Ø10 - Ø25



Double-acting, adjustable cushioning through rod	Ø20 - Ø25 (not for seal material type F and L)
Double-acting, non-adjustable cushioning through rod	Ø10 - Ø25
Double-acting, adjustable cushioning through rod, hollow	Ø20 - Ø25 (not for seal material type F and L)
Double-acting, non-adjustable cushioning through rod, hollow	Ø20 - Ø25 max stroke 125mm



Single acting options

Single-acting, Spring return for retracted stroke. Non-adjustable cushioning	Ø10 - Ø25
Single-acting, Spring extended for advanced stroke. Non-adjustable cushioning	Ø20 - Ø25



Tel: +45 63 12 83 00 | Email: ps@hymatik.com | www.hymatik.com | Hvidkaervej 27a, DK-5250 Odense SV, Denmark

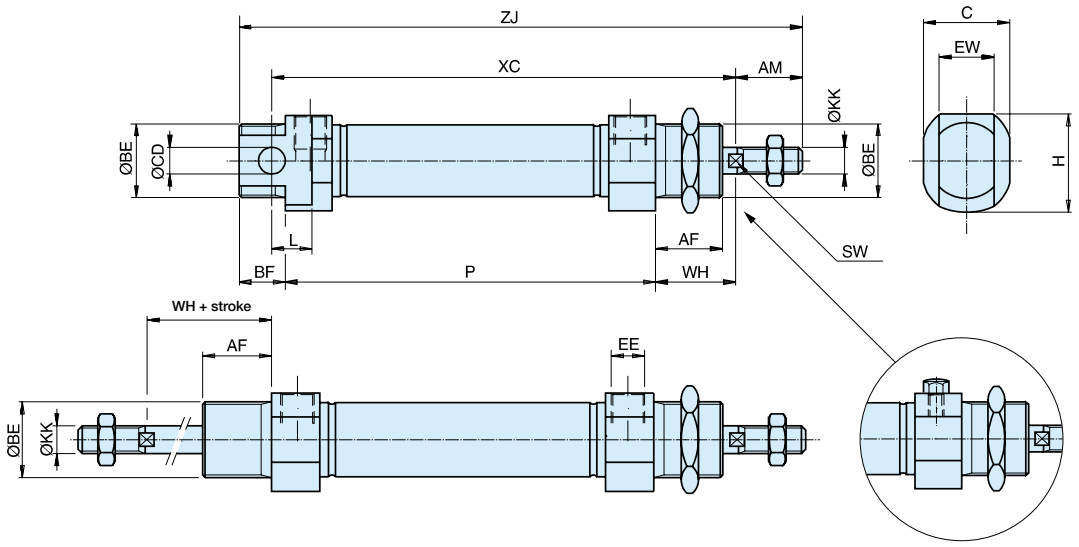

Dimensions

Cyl. bore mm	AM 0/-2 mm	BE	AF mm	BF mm	C mm	CDH9 mm	EE	EW mm	H mm	KK	L mm	SW mm	WH±1,2 mm
10	12	M12x1,25	12	10	14	4	M5	8	19	M4	6	–	16
12	16	M16x1,5	18	13	18	6	M5	12	19	M6	9	5	22
16	16	M16x1,5	18	13	18	6	M5	12	19	M6	9	5	22
20	20	M22x1,5	20	14	24	8	G1/8	16	29	M8	12	7	24
25	22	M22x1,5	22	14	28	8	G1/8	16	32	M10x1,25	12	9	28

Double acting cylinders

Cyl. bore mm	XC mm	ZJ mm	P mm
10	64 + stroke	84 + stroke	46 + stroke
12	75 + stroke	99 + stroke	48 + stroke
16	82 + stroke	104 + stroke	53 + stroke
20	95 + stroke	125 + stroke	67 + stroke
25	104 + stroke	132 + stroke	68 + stroke

Single acting with spring return, type SS

Stroke/	10	15	25	40	50	80	10	15	25	40	50	80	10	15	25	40	50	80
Cyl. bore	XC	XC	XC	XC	XC	XC	ZJ	ZJ	ZJ	ZJ	ZJ	ZJ	P	P	P	P	P	P
mm	mm	mm	mm	mm	mm	mm	mm	mm	mm	mm	mm	mm	mm	mm	mm	mm	mm	mm
10	74	79	89	126	136	174	94	99	109	146	156	194	56	61	71	108	118	156
12	85	90	100	132	142	185	109	114	124	156	166	209	58	63	73	105	115	158
16	92	97	107	122	132	184	114	119	129	144	154	206	63	68	78	93	103	155
20	105	110	120	135	145	191	135	140	150	165	175	221	77	82	92	107	117	163
25	114	119	129	144	154	201	142	147	157	172	182	229	78	83	93	108	118	165

Length tolerances ±1 mm
Stroke length tolerances +1,5/0 mm

Cylinders are supplied complete with mounting and adjusting nuts.
Cylinders with through piston rod are supplied complete with two adjusting nuts and one mounting nut.

Tel: +45 63 12 83 00 | Email: ps@hymatik.com | www.hymatik.com | Hvidkaervej 27a, DK-5250 Odense SV, Denmark

Cylinder mountings

Flange-MF8



Intended for fixed attachment of the cylinder. The flange is designed for mounting on the front or rear end-covers.

Material:
Stainless steel, DIN X 10 CrNiS 18 9

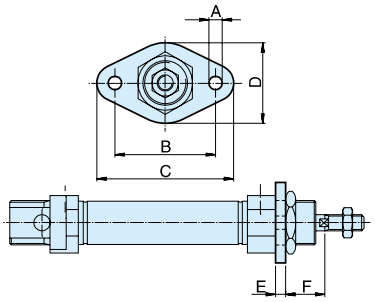

Cylinder Ø mm	A mm	B mm	C mm	D mm	E mm	F mm	Weight Kg	Order code
10	4,5	30	40	22	3	13	0,012	**P1S-4CMB**
12-16	5,5	40	52	30	4	18	0,025	**P1S-4DMB**
20	6,6	50	66	40	5	19	0,045	**P1S-4HMB**
25	6,6	50	66	40	5	23	0,045	**P1S-4HMB**

Foot-MS3



Intended for fixed attachement of the cylinder. The bracket is designed for mounting on the front or rear end-covers.

Material:
Stainless steel, DIN X 10 CrNiS 18 9

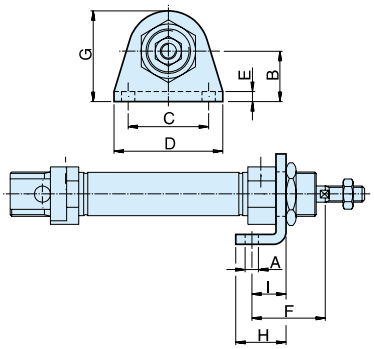

Cylinder Ø mm	A mm	B mm	C mm	D mm	E mm	F mm	G mm	H mm	I mm	Weight Kg	Order code
10	4,5	16	25	35	3	24	26	16	11	0,020	**P1S-4CMF**
12-16	5,5	20	32	42	4	32	32,5	20	14	0,040	**P1S-4DMF**
20	6,5	25	40	54	5	36	45	25	17	0,080	**P1S-4HMF**
25	6,5	25	40	54	5	40	45	25	17	0,080	**P1S-4HMF**

Cover trunnion



Intended for articulated mounting of the cylinder. The flange is designed for mounting on the front or rear end-covers.

Material:
Stainless steel, DIN X 10 CrNiS 18 9

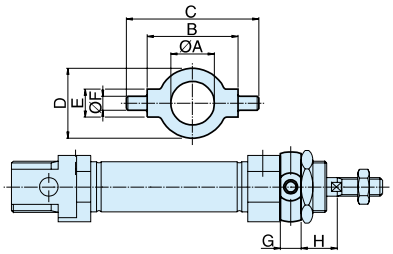

Cylinder Ø	A mm	B h14 mm	C mm	D mm	E e9 mm	F mm	G mm	H Kg	Weight	Order code
10	12,5	26	38	20	8	4	6	10	0,014	**P1A-4CMJ**
12-16	16,5	38	58	25	10	6	8	14	0,033	**P1A-4DMJ**
20	22,5	46	66	30	10	6	8	16	0,037	**P1A-4HMJ**
25	22,5	46	66	30	10	6	8	20	0,037	**P1A-4HMJ**

Mounting nut



Intended for fixed mounting of the cylinder.
Cylinders are supplied complete with one mounting nut.

Material:
Stainless steel, DIN X 5 CrNi 18 10

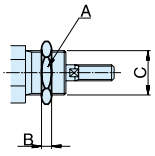

Cylinder Ø mm	A mm	B mm	C	Weight Kg	Order code
10	19	6	M12x1,25	0,009	**9126725405**
12-16	24	8	M16x1,50	0,018	**9126725406**
20-25	27	5	M22x1,50	0,042	**9126725407**

Parker Hannifin Corporation
Pneumatic Division - Europe

Tel: +45 63 12 83 00 | Email: ps@hymatik.com | www.hymatik.com | Hvidkaervej 27a, DK-5250 Odense SV, Denmark

Cylinder mountings

Clevis bracket AB3



Intended for articulated mounting of the cylinder.
Supplied with shaft for mounting on the rear end cover.

Material:
Bracket: stainless steel, DIN X 5 CrNi 18 10
Pin: tempered stainless steel, DIN X 20 Cr 13
Locking rings: stainless steel, DIN X 5 CrNi 18 10

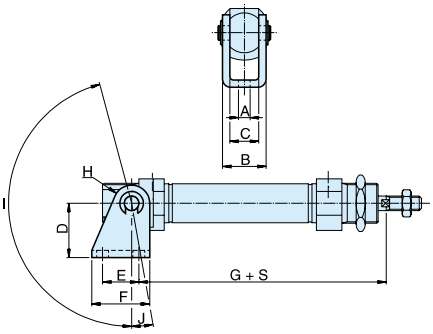

Cylinder Ø mm	A mm	B mm	C mm	D mm	E mm	F mm	G mm	H mm	I °	J °	Weight Kg	Order code
10	4,5	13	8	24	12,5	20	65,3	5	160	17	0,020	**P1S-4CMT**
12	5,5	18	12	27	15	25	73	7	170	15	0,040	**P1S-4DMT**
16	5,5	18	12	27	15	25	80	7	170	15	0,040	**P1S-4DMT**
20	6,5	24	16	30	20	32	91	10	165	10	0,080	**P1S-4HMT**
25	6,5	24	16	30	20	32	100	10	165	10	0,080	**P1S-4HMT**

S=stroke

Clevis AP2



According to ISO 8140
Intended for articulated mounting of the cylinder.
This mounting is adjustable in the axial direction.
Supplied complete with pin.

Material:
Stainless steel, DIN X 5 CrNi 18 10

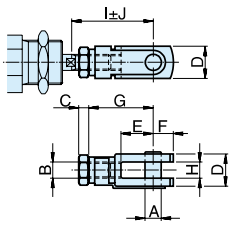

Cylinder Ø mm	A mm	B	C mm	D mm	E mm	F mm	G mm	H mm	I mm	J mm	Weight	Order code
10	4	M4	2,2	8	8	5	16	4	22	2	0,007	**P1S-4CRD**
12-16	6	M6	3,2	12	12	7	24	6	31	3	0,022	**P1S-4DRD**
20	8	M8	4	16	16	10	32	8	40,5	3,5	0,045	**P1S-4HRD**
25	10	M10x1,25	5	20	20	12	40	10	49	3	0,095	**P1S-4JRD**

Swivel rod eye AP6



According to ISO 8139
Intended for articulated mounting of the cylinder.
This mounting is adjustable in the axial direction.

Material:
Swivel rod eye: stainless steel, DIN X 5 CrNi 18 10
Ball: hardened stainless steel, DIN X 5 CrNi 18 10

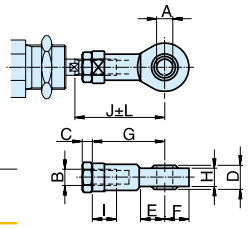

Cylinder Ø mm	A mm	B	C mm	D mm	E mm	F mm	G mm	H mm	I mm	J mm	K mm	L mm	Weight	Order code
10	5	M4	2,2	8	10	9	27	6	8	33	9	2	0,017	**P1S-4CRT**
12-16	6	M6	3,2	9	10	10	30	6,8	9	38,5	11	1,5	0,025	**P1S-4DRT**
20	8	M8	4	12	12	12	36	9	12	46	14	2	0,045	**P1S-4HRT**
25	10	M10x1,25	5	14	14	14	43	10,5	15	52,5	17	2,5	0,085	**P1S-4JRT**

Rod nut



Intended for fixed mounting on the piston rod. Cylinders are supplied complete with one rod nut. (cylinders with through piston rod are supplied with two rod nuts.)

Material:
Stainless steel, DIN X 5 CrNi 18 10

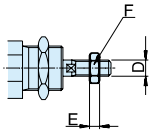

Cylinder Ø mm	D	F mm	E mm	Weight	Order code
10	M4	7	2,2	0,001	**9127385121**
12-16	M6	10	3,2	0,002	**9127385122**
20	M8	13	4	0,005	**9127385123**
25	M10x1,25	17	5	0,007	**9126725404**

Tel: +45 63 12 83 00 | Email: ps@hymatik.com | www.hymatik.com | Hvidkaervej 27a, DK-5250 Odense SV, Denmark

This range of stainless steel cylinders has been specially designed for use in difficult environments. Hygienic design, external seals of flourianted rubber and prelubrication with our food-industry-approved grease according to USDA-H1 make the cylinders particularly suitable for food industry use. All cylinders have magnetic pistons for proximity position sensing. Fixing dimensions to ISO 6431 simplify installation and make the cylinders physically interchangeable throughout the world.

- Round cylinder to ISO 6431
- All stainless steel
- Clean, smooth washdown design
- Magnetic piston as standard
- Adjustable cushioning for long service life
- Complete range of mountings and sensors



ATEX certified
(add -EXNN end of order code)

Operating information

Working pressure:	Max 10 bar
Temperature range:	-20°C to +70°C
ATEX approval:	CE Ex IIGD c T4 120°C

Prelubricated, further lubrication is not normally necessary. If additional lubrication is introduced it must be continued.

For more information see www.parker.com/euro_pneumatic

Standard stroke lengths

Ø32mm - (G1/8)

Stroke mm	Order code
25	P1S-D032MS-0025
50	P1S-D032MS-0050
80	P1S-D032MS-0080
100	P1S-D032MS-0100
125	P1S-D032MS-0125
160	P1S-D032MS-0160
200	P1S-D032MS-0200
250	P1S-D032MS-0250
320	P1S-D032MS-0320
400	P1S-D032MS-0400
500	P1S-D032MS-0500

Ø40mm - (G1/4)

Stroke mm	Order code
25	P1S-D040MS-0025
50	P1S-D040MS-0050
80	P1S-D040MS-0080
100	P1S-D040MS-0100
125	P1S-D040MS-0125
160	P1S-D040MS-0160
200	P1S-D040MS-0200
250	P1S-D040MS-0250
320	P1S-D040MS-0320
400	P1S-D040MS-0400
500	P1S-D040MS-0500

Ø50mm - (G1/4)

Stroke mm	Order code
25	P1S-D050MS-0025
50	P1S-D050MS-0050
80	P1S-D050MS-0080
100	P1S-D050MS-0100
125	P1S-D050MS-0125
160	P1S-D050MS-0160
200	P1S-D050MS-0200
250	P1S-D050MS-0250
320	P1S-D050MS-0320
400	P1S-D050MS-0400
500	P1S-D050MS-0500

Ø63mm - (G3/8)

Stroke mm	Order code
25	P1S-D063MS-0025
50	P1S-D063MS-0050
80	P1S-D063MS-0080
100	P1S-D063MS-0100
125	P1S-D063MS-0125
160	P1S-D063MS-0160
200	P1S-D063MS-0200
250	P1S-D063MS-0250
320	P1S-D063MS-0320
400	P1S-D063MS-0400
500	P1S-D063MS-0500

Ø80mm - (G3/8)

Stroke mm	Order code
25	P1S-L080MS-0025
50	P1S-L080MS-0050
80	P1S-L080MS-0080
100	P1S-L080MS-0100
125	P1S-L080MS-0125
160	P1S-L080MS-0160
200	P1S-L080MS-0200
250	P1S-L080MS-0250
320	P1S-L080MS-0320
400	P1S-L080MS-0400
500	P1S-L080MS-0500

Ø100mm - (G1/2)

Stroke mm	Order code
25	P1S-L100MS-0025
50	P1S-L100MS-0050
80	P1S-L100MS-0080
100	P1S-L100MS-0100
125	P1S-L100MS-0125
160	P1S-L100MS-0160
200	P1S-L100MS-0200
250	P1S-L100MS-0250
320	P1S-L100MS-0320
400	P1S-L100MS-0400
500	P1S-L100MS-0500

Ø125mm - (G1/2)

Stroke mm	Order code
25	P1S-L125MS-0025
50	P1S-L125MS-0050
80	P1S-L125MS-0080
100	P1S-L125MS-0100
125	P1S-L125MS-0125
160	P1S-L125MS-0160
200	P1S-L125MS-0200
250	P1S-L125MS-0250
320	P1S-L125MS-0320
400	P1S-L125MS-0400
500	P1S-L125MS-0500

Tel: +45 63 12 83 00 | Email: ps@hymatik.com | www.hymatik.com | Hvidkaervej 27a, DK-5250 Odense SV, Denmark

Design Variants

Working temperatures

High temperature -10°C to +150°C Non-magnetic piston

Low temperature

Ø10 and Ø125mm -40°C to +40°C Non-magnetic piston

Stainless steel scraper for piston rod

-20°C to +80°C Magnetic piston

Mounting options

ISO 6431 Stainless Steel Cylinders are available with a variety of integral threaded mounting holes or trunnion pegs.

Double acting options

Double-acting adjustable cushioning Ø80 - Ø125



Double-acting adjustable cushioning through rod only Ø80 - Ø125



Dimensions Ø32-Ø63

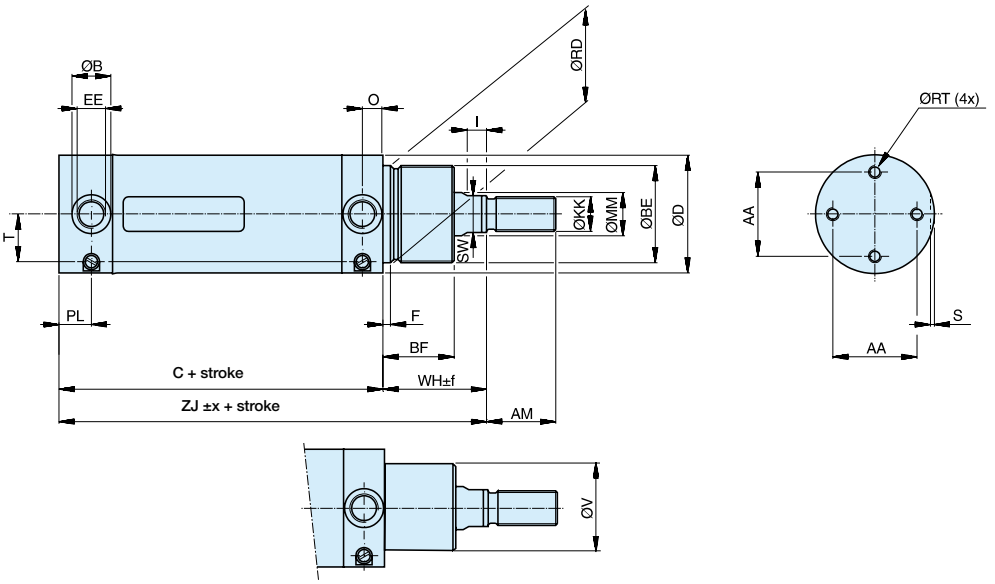

Not threaded front end

Cylinder designation	AA mm	AM mm	B mm	BF mm	BE	C mm	D mm	EE	F mm	I mm	KK	MM mm	O mm	PL mm	RD mm	RT mm
P1S-D032M	24,5	22	15	25	M30x1,5	88	36	G1/8	4,2	6	M10x1,25	12	8	13	30	M5
P1S-D040M	30	24	18	30	M38x1,5	97	44	G1/4	4,5	9	M12x1,25	16	9,5	15	38	M6
P1S-D050M	39	32	18	33	M45x1,5	101	55	G1/4	4,5	9	M16x1,5	20	9,5	15	45	M6
P1S-D063M	49	32	25	33	M45x1,5	117	68	G3/8	4,5	9	M16x1,5	20	13,3	20,5	45	M8

Cylinder designation	S mm	SW mm	T mm	V mm	WH mm	ZJ mm	Mounting tolerances x mm	Mounting tolerances f mm	Stroke length 0-500 mm mm
P1S-D032M	1,5	10	12,2	26	35,5	123,5	1,2	2,5	+2,0
P1S-D040M	1,5	14	16,5	35	44	141	1,0	2,2	+2,0
P1S-D050M	1,5	17	22	41	47	148	0,9	2,3	+2,0
P1S-D063M	1,5	17	26	41	47	164	1,4	2,3	+2,5

Parker Hannifin Corporation
Pneumatic Division - Europe

Tel: +45 63 12 83 00 | Email: ps@hymatik.com | www.hymatik.com | Hvidkaervej 27a, DK-5250 Odense SV, Denmark

Dimensions Ø32-Ø63

Through piston rod

Basic cylinder

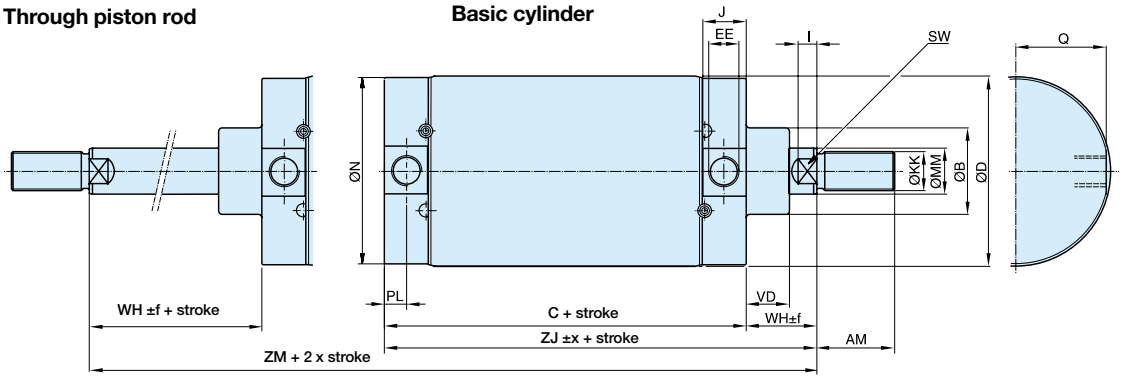

Threaded front end

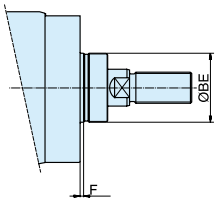

Mounting holes in the end covers

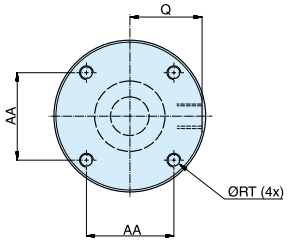

Cylinder designation	AA mm	AM mm	B mm	BE	C mm	D mm	EE	F mm	KK	I mm	J mm	MM mm	N mm	PL mm	Q mm
P1S-•080M	46	40	50	M50x1,5	141	86	G3/8	4	M20x1,5	10	24,5	25	84	12,5	40
P1S-•100M	60	40	50	M50x1,5	158	106	G1/2	4	M20x1,5	8	30	25	104	15,5	49,5
P1S-•125M	76	54	60	M60x2	183	133	G1/2	4	M27x2	13	30	32	129	15,5	62,5

Cylinder designation	RT mm	SW mm	VD mm	WH mm	ZJ mm	ZM mm	Mounting tol. Stroke length x mm	f mm	0-500 mm
P1S-•080M	M8	21	19	37	178	215	1,5	2,5	+2,5
P1S-•100M	M10	21	19	35	193	228	1,5	2,5	+2,5
P1S-•125M	M12	27	24	47	230	277	2,0	2,5	+4,0

Cylinder mountings Ø32 - Ø63

Mounting nut



Intended for fixed mounting of the cylinder via the neck.

Material: stainless steel, DIN X 5 CrNi 18 10

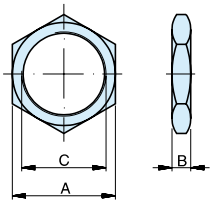

Cylinder Ø mm	A mm	B mm	C	Weight Kg	Order code
32	36	8	M30x1,5	0,03	**9127294401**
40	46	10	M38x1,5	0,06	**9127294402**
50	55	10	M45x1,5	0,08	**9127294403**
63	55	10	M45x1,5	0,08	**9127294403**

Cylinder mountings Ø32 - Ø125

Rod nut



Intended for fixed mounting on the piston rod. Cylinders are supplied complete with one rod nut. (cylinders with through piston rods are supplied with two rod nuts.)

Material:
Stainless steel, DIN X 5 CrNi 18 10

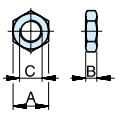

Cylinder Ø	A mm	B mm	C mm	Weight Kg	Order code
32	17	5	M10x1,25	0,01	**9126725404**
40	19	6	M12x1,25	0,01	**9126725405**
50	24	8	M16x1,5	0,02	**9126725406**
63	24	8	M16x1,5	0,02	**9126725406**
80	30	10	M20x1,5	0,04	**0261109921**
100	30	10	M20x1,5	0,04	**0261109921**
125	41	13,5	M27x2	0,10	**0261109922**

Cylinder mountings Ø32 - Ø125

Swivel rod eye AP6



According to ISO 8139
Intended for articulated mounting of the cylinder. This mounting is adjustable in the axial direction.

Materal:
Swivel rod eye: stainless steel, DIN X 5 CrNi 18 10
Ball: hardened stainless steel, DIN X 5 CrNi 18 10

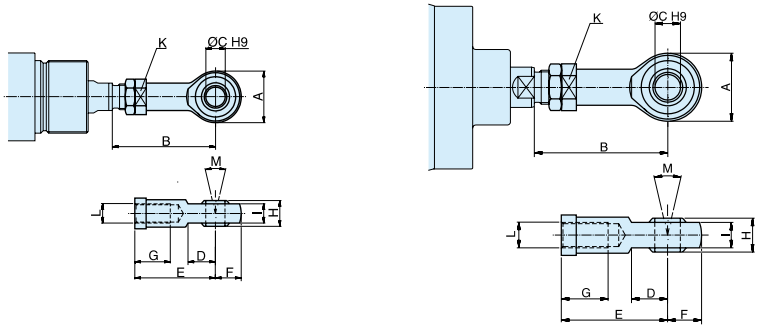

Cyl. Ø mm	A mm	B_{min} mm	B_{max} mm	C mm	D mm	E mm	F mm	G mm	H mm	I mm	K mm	L	M	Weight Kg	Order code
32	28	50	55	10	15	43	14	15	14	10,5	17	M10x1,25	24°	0,08	**P1S-4JRT**
40	32	56	62	12	17	50	16	22	16	12	19	M12x1,25	24°	0,12	**P1S-4LRT**
50	42	72	80	16	22	64	21	28	21	15	22	M16x1,5	30°	0,25	**P1S-4MRT**
63	42	72	80	16	22	64	21	28	21	15	22	M16x1,5	30°	0,25	**P1S-4MRT**
80	50	87	97	20	26	77	25	33	25	18	32	M20x1,5	30°	0,46	**P1S-4PRT**
100	50	87	97	20	26	77	25	33	25	18	32	M20x1,5	30°	0,46	**P1S-4PRT**
125	70	123,5	137	30	36	110	35	51	37	25	41	M27x2	30°	1,28	**P1S-4RRT**

Clevis Clevis AP2



According to ISO 8140
Intended for articulated mounting of the cylinder. This mounting is adjustable in the axial direction. Supplied complete with pin.

Material:
Clevis: stainless steel, DIN X 10 CrNiS 18 9
Pin: stainless steel, DIN X 5 CrNi 18 10
Locking rings according to DIN 471

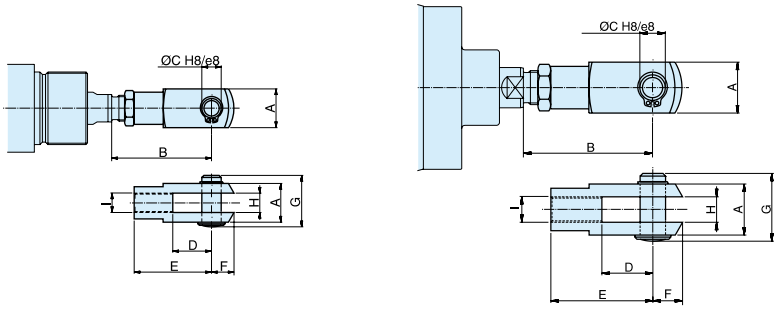

Cyl. Ø mm	A mm	B_{min} mm	B_{max} mm	C mm	D mm	E mm	F mm	G mm	H mm	I	Weight Kg	Order code
32	20	46	52	10	20	40	12	28	10	M10x1,25	0,09	**P1S-4JRD**
40	24	54	60	12	24	48	19	32	12	M12x1,25	0,15	**P1S-4LRD**
50	32	72	80	16	32	64	25	42	16	M16x1,5	0,35	**P1S-4MRD**
63	32	72	80	16	32	64	25	42	16	M16x1,5	0,35	**P1S-4MRD**
80	40	90	100	20	40	80	32	50	20	M20x1,5	0,75	**P1S-4PRD**
100	40	90	100	20	40	80	32	50	20	M20x1,5	0,75	**P1S-4PRD**
125	55	123,5	137	30	54	110	45	72	30	M27x2	2,10	**P1S-4RRD**

Tel: +45 63 12 83 00 | Email: ps@hymatik.com | www.hymatik.com | Hvidkaervej 27a, DK-5250 Odense SV, Denmark

Cylinder mountings

Flange MF1/MF2



Intended for fixed attachment of cylinder version D, E, F or L. The flange is designed for mounting on the front or rear end covers.

Material:
Stainless steel, DIN X 5 CrNiMo 17 13 3

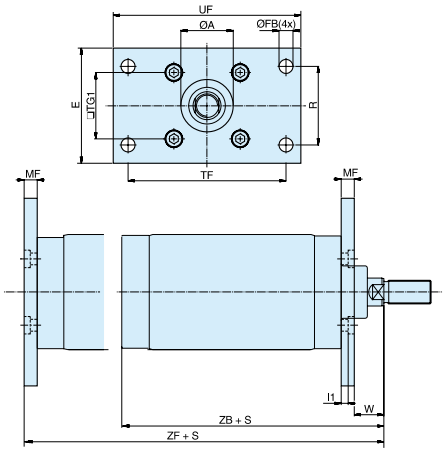

Cylinder Ø mm	A mm	FB mm	E mm	R mm	TF mm	TG1 mm	UF mm	MF mm	I1 mm	W mm	ZB mm	ZF mm	Weight Kg	Order code
80	50,2	12	86	63	126	46	150	12	6	25	178	190	0,97	**P1S-4PMB**
100	51	14	106	75	150	60	170	12	6	23	193	205	1,42	**P1S-4QMB**
125	61	16	132	90	180	76	205	15	8	32	230	245	1,55	**P1S-4RMB**

S = Stroke

Clevis bracket MP4



Intended for articulated mounting of cylinder versions D, F, or L. The bracket is mounted on the rear end cover and is supplied complete with shaft, mounting screw and O-ring for a clean joint between end cover and bracket.

Material:
Bracket: stainless steel, DIN X 5 CrNi 18 10
Pin: stainless steel, DIN X 5 CrNiMo 17 13 3

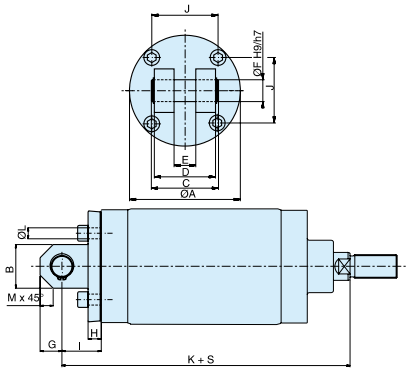

Cylinder Ø mm	A mm	B mm	C mm	D mm	E mm	F mm	G mm	H mm	I mm	J mm	K mm	L mm	M mm	Weight Kg	Order code
80	80	30	57	50	16	16	15	12	32	46	210	8,6	9	0,78	**P1S-4PME**
100	103	42	67	60	20	20	21	12	37	60	230	10,6	12	1,42	**P1S-4QME**
125	127	50	77	70	25	25	25	15	45	76	275	12,6	15	2,06	**P1S-4RME**

S = Stroke

Mounting nut



Intended for fixed mounting on the front end cover of cylinders according to cylinder version C or D.

Material:
Stainless steel, DIN X 5 CrNi 18 10

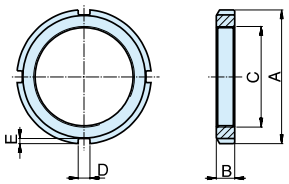

Cylinder Ø mm	A mm	B mm	C	D mm	E mm	Weight Kg	Order code
80	70	11	M50x1,5	6	2,5	0,16	**9126461304**
100	70	11	M50x1,5	6	2,5	0,16	**9126461304**
125	80	11	M60x2	7	3	0,19	**9126461305**

Parker Hannifin Corporation
Pneumatic Division - Europe

Tel: +45 63 12 83 00 | Email: ps@hymatik.com | www.hymatik.com | Hvidkaervej 27a, DK-5250 Odense SV, Denmark

Cylinder mountings

Cylinder mountings

Type	Description	Cyl. bore Ø mm	Weight kg	Order code
Combinated mounting MP2/MP4 	Intended for articulated mounting of cylinder versions D, F or L. The unit is mounted on the rear end cover and is combined with bearing brackets MP2 and is supplied complete with shaft, mounting screw and O-ring for a clean joint between end cover and bracket. Material: Bearing brackets: stainless steel, DIN X 5 CrNi 18 10 Journal bearing: stainless steel, Journal bearing: DIN X 5 CrNiMo 17 13 3/PTFE Bracket: stainless steel, DIN X 5 CrNi 18 10 Pin: stainless steel, DIN X 5 CrNiMo 17 13 3	80 100 125	1,29 2,33 3,30	**P1S-4PML** **P1S-4QML** **P1S-4RML**

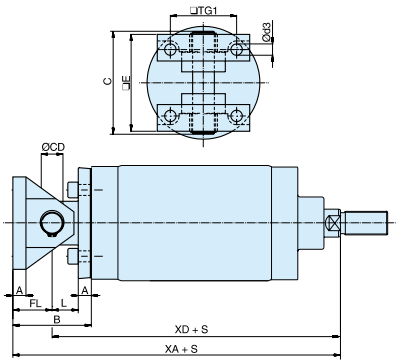

Cylinder Ø mm	A mm	B mm	C mm	CD mm	d3 mm	E mm	FL mm	L mm	TG1 mm	XA mm	XD mm
80	12	64	82	16	9	74	32	20	46	242	210
100	12	74	98	20	11	90	37	25	60	267	230
125	15	90	118	25	13	110	45	30	76	320	275

S = Stroke

Tel: +45 63 12 83 00 | Email: ps@hymatik.com | www.hymatik.com | Hvidkaervej 27a, DK-5250 Odense SV, Denmark









P1P Short Build Compact Cylinders

According to ISO 21287



The P1P Series is a complete range of ISO 21287 compact cylinders developed to meet the highest requirements for quality and performance. The careful design in every detail provides first class function and service life properties.

Reliability and long service life are key qualities of any pneumatic cylinder. Therefore we have given P1P highest possible quality in every detail based on our 40 years of experience and extensive testing. The design is based on the following important principles.

- **Proven seal design and materials throughout the cylinder. The expertise for seal technology within Parker Hannifin is the basis for leading and proven tribology solutions for all our pneumatic actuators.**
- **Body extrusion in anodised aluminium with extra fine and hard internal surface for optimum operational conditions.**
- **End covers and body extrusion with external anodisation for excellent corrosion resistance.**
- **Stainless steel piston rod for versatile use in corrosive environment.**

Tel: +45 63 12 83 00 | Email: ps@hymatik.com | www.hymatik.com | Hvidkaervej 27a, DK-5250 Odense SV, Denmark

Double acting

The versatile high quality ISO compact cylinder range, P1P cylinders are up to 50% shorter than ISO15552 cylinders for the same stroke. Suitable for a wide range of applications.

Double acting - Guided

This cylinder version feature twin guide rods connected to the piston rod by a large flange plate. These cylinders are ideal for clamping an moving applications where turning of the piston rod must be avoided.

- Bore 20 - 100 mm
- ISO 21287 conformity
- Corrosion resistant design and low weight construction
- Magnetic piston as standard
- Elastic cushioning
- Flexible direct mounting
- ISO 15552 mountings and global sensor range common with P1D

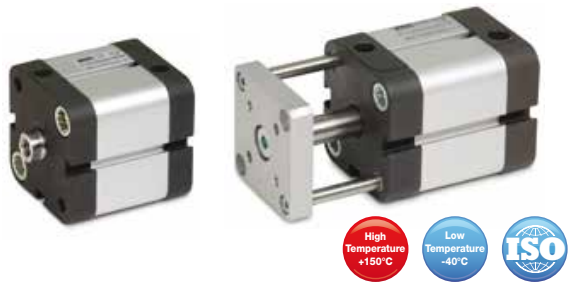

Operating information

Working pressure:	Max 10 bar
Permissible fluid:	Air, with or without lubrication
Seals / Temperature options	
Standard:	-20°C to +80°C
High temperature:	-10°C to +120°C
Low temperature:	-40°C to +80°C

Prelubricated, further lubrication is not normally necessary. If additional lubrication is introduced it must be continued.

For more information see www.parker.com/euro_pneumatic

*** Double acting - Guided order code.**

Place **G** in position **4** of the order code

Example: P1PG020DS7G0025

Double acting - Female threaded piston rod

Ø20mm - (M5)

Stroke mm	Order code
5	**P1PS020DS7G0005**
10	**P1PS020DS7G0010**
15	**P1PS020DS7G0015**
20	**P1PS020DS7G0020**
25	**P1PS020DS7G0025**
30	**P1PS020DS7G0030**
40	**P1PS020DS7G0040**
50	**P1PS020DS7G0050**
60	**P1PS020DS7G0060**

Ø25mm - (M5)

Stroke mm	Order code
5	**P1PS025DS7G0005**
10	**P1PS025DS7G0010**
15	**P1PS025DS7G0015**
20	**P1PS025DS7G0020**
25	**P1PS025DS7G0025**
30	**P1PS025DS7G0030**
40	**P1PS025DS7G0040**
50	**P1PS025DS7G0050**
60	**P1PS025DS7G0060**

Ø32mm - (G1/8)

Stroke mm	Order code
5	**P1PS032DS7G0005**
10	**P1PS032DS7G0010**
15	**P1PS032DS7G0015**
20	**P1PS032DS7G0020**
25	**P1PS032DS7G0025**
30	**P1PS032DS7G0030**
40	**P1PS032DS7G0040**
50	**P1PS032DS7G0050**
60	**P1PS032DS7G0060**
80	**P1PS032DS7G0080**

Ø40mm - (G1/8)

Stroke mm	Order code
5	**P1PS040DS7G0005**
10	**P1PS040DS7G0010**
15	**P1PS040DS7G0015**
20	**P1PS040DS7G0020**
25	**P1PS040DS7G0025**
30	**P1PS040DS7G0030**
40	**P1PS040DS7G0040**
50	**P1PS040DS7G0050**
60	**P1PS040DS7G0060**
80	**P1PS040DS7G0080**

Ø50mm - (G1/8)

Stroke mm	Order code
5	**P1PS050DS7G0005**
10	**P1PS050DS7G0010**
15	**P1PS050DS7G0015**
20	**P1PS050DS7G0020**
25	**P1PS050DS7G0025**
30	**P1PS050DS7G0030**
40	**P1PS050DS7G0040**
50	**P1PS050DS7G0050**
60	**P1PS050DS7G0060**
80	**P1PS050DS7G0080**

Ø63mm - (G1/8)

Stroke mm	Order code
5	**P1PS063DS7G0005**
10	**P1PS063DS7G0010**
15	**P1PS063DS7G0015**
20	**P1PS063DS7G0020**
25	**P1PS063DS7G0025**
30	**P1PS063DS7G0030**
40	**P1PS063DS7G0040**
50	**P1PS063DS7G0050**
60	**P1PS063DS7G0060**
80	**P1PS063DS7G0080**

Ø80mm - (G1/8)

Stroke mm	Order code
5	**P1PS080DS7G0005**
10	**P1PS080DS7G0010**
15	**P1PS080DS7G0015**
20	**P1PS080DS7G0020**
25	**P1PS080DS7G0025**
30	**P1PS080DS7G0030**
40	**P1PS080DS7G0040**
50	**P1PS080DS7G0050**
60	**P1PS080DS7G0060**
80	**P1PS080DS7G0080**
100	**P1PS080DS7G0100**

Ø100mm - (G1/8)

Stroke mm	Order code
10	**P1PS100DS7G0010**
15	**P1PS100DS7G0015**
20	**P1PS100DS7G0020**
25	**P1PS100DS7G0025**
30	**P1PS100DS7G0030**
40	**P1PS100DS7G0040**
50	**P1PS100DS7G0050**
60	**P1PS100DS7G0060**
80	**P1PS100DS7G0080**
100	**P1PS100DS7G0100**

Sensors



For sensors see page 77.

Tel: +45 63 12 83 00 | Email: ps@hymatik.com | www.hymatik.com | Hvidkaervej 27a, DK-5250 Odense SV, Denmark

Double acting

The versatile high quality ISO compact cylinder range, P1P cylinders are up to 50% shorter than ISO15552 cylinders for the same stroke. Suitable for a wide range of applications.



- Bore 20 - 100 mm
- ISO 21287 conformity
- Corrosion resistant design and low weight construction
- Magnetic piston as standard
- Elastic cushioning
- Flexible direct mounting
- ISO 15552 mountings and global sensor range common with P1D

Double acting - Male threaded piston rod

Ø20mm - (M5)

Stroke mm	Order code
5	**P1PS020DS8G0005**
10	**P1PS020DS8G0010**
15	**P1PS020DS8G0015**
20	**P1PS020DS8G0020**
25	**P1PS020DS8G0025**
30	**P1PS020DS8G0030**
40	**P1PS020DS8G0040**
50	**P1PS020DS8G0050**
60	**P1PS020DS8G0060**

Ø25mm - (M5)

Stroke mm	Order code
5	**P1PS025DS8G0005**
10	**P1PS025DS8G0010**
15	**P1PS025DS8G0015**
20	**P1PS025DS8G0020**
25	**P1PS025DS8G0025**
30	**P1PS025DS8G0030**
40	**P1PS025DS8G0040**
50	**P1PS025DS8G0050**
60	**P1PS025DS8G0060**

Ø32mm - (G1/8)

Stroke mm	Order code
5	**P1PS032DS8G0005**
10	**P1PS032DS8G0010**
15	**P1PS032DS8G0015**
20	**P1PS032DS8G0020**
25	**P1PS032DS8G0025**
30	**P1PS032DS8G0030**
40	**P1PS032DS8G0040**
50	**P1PS032DS8G0050**
60	**P1PS032DS8G0060**
80	**P1PS032DS8G0080**

Ø40mm - (G1/8)

Stroke mm	Order code
5	**P1PS040DS8G0005**
10	**P1PS040DS8G0010**
15	**P1PS040DS8G0015**
20	**P1PS040DS8G0020**
25	**P1PS040DS8G0025**
30	**P1PS040DS8G0030**
40	**P1PS040DS8G0040**
50	**P1PS040DS8G0050**
60	**P1PS040DS8G0060**
80	**P1PS040DS8G0080**

Ø50mm - (G1/8)

Stroke mm	Order code
5	**P1PS050DS8G0005**
10	**P1PS050DS8G0010**
15	**P1PS050DS8G0015**
20	**P1PS050DS8G0020**
25	**P1PS050DS8G0025**
30	**P1PS050DS8G0030**
40	**P1PS050DS8G0040**
50	**P1PS050DS8G0050**
60	**P1PS050DS8G0060**
80	**P1PS050DS8G0080**

Ø63mm - (G1/8)

Stroke mm	Order code
5	**P1PS063DS8G0005**
10	**P1PS063DS8G0010**
15	**P1PS063DS8G0015**
20	**P1PS063DS8G0020**
25	**P1PS063DS8G0025**
30	**P1PS063DS8G0030**
40	**P1PS063DS8G0040**
50	**P1PS063DS8G0050**
60	**P1PS063DS8G0060**
80	**P1PS063DS8G0080**

Ø80mm - (G1/8)

Stroke mm	Order code
5	**P1PS080DS8G0005**
10	**P1PS080DS8G0010**
15	**P1PS080DS8G0015**
20	**P1PS080DS8G0020**
25	**P1PS080DS8G0025**
30	**P1PS080DS8G0030**
40	**P1PS080DS8G0040**
50	**P1PS080DS8G0050**
60	**P1PS080DS8G0060**
80	**P1PS080DS8G0080**
100	**P1PS080DS8G0100**

Ø100mm - (G1/8)

Stroke mm	Order code
10	**P1PS100DS8G0010**
15	**P1PS100DS8G0015**
20	**P1PS100DS8G0020**
25	**P1PS100DS8G0025**
30	**P1PS100DS8G0030**
40	**P1PS100DS8G0040**
50	**P1PS100DS8G0050**
60	**P1PS100DS8G0060**
80	**P1PS100DS8G0080**
100	**P1PS100DS8G0100**

Sensors



For sensors see page 77.

Tel: +45 63 12 83 00 | Email: ps@hymatik.com | www.hymatik.com | Hvidkaervej 27a, DK-5250 Odense SV, Denmark

Single acting

Single acting P1P cylinders are available in bore sizes 20 - 63 mm and in two versions to suit a wide range of applications. Choose between the spring return (SS) and the spring extended (TS) versions.



*** Spring return order code.**
Place **S** in position **8** of the order code
Example: P1PS020**S**S7G0025



*** Spring extended order code.**
Place **T** in position **8** of the order code
Example: P1PS020**T**S7G0025

Single acting - Female threaded piston rod

Ø20mm - (M5)

Stroke mm	Order code
25	**P1PS020 * S7G0025**

Ø25mm - (M5)

Stroke mm	Order code
25	**P1PS025 * S7G0025**

Ø32mm - (G1/8)

Stroke mm	Order code
25	**P1PS032 * S7G0025**

Ø40mm - (G1/8)

Stroke mm	Order code
25	**P1PS040 * S7G0025**

Ø50mm - (G1/8)

Stroke mm	Order code
25	**P1PS050 * S7G0025**

Ø63mm - (G1/8)

Stroke mm	Order code
25	**P1PS063 * S7G0025**

Double acting - Through piston rod

The P1P through rod cylinder version is available in bore sizes 20 - 100 mm. This cylinder type is used in many ways e.g. in applications with higher lateral forces or when performing a movement on both sides of the cylinder.



Double acting - Through piston rod - Female threaded piston rod

Ø20mm - (M5)

Stroke mm	Order code
5	**P1PS020KS7G0005**
10	**P1PS020KS7G0010**
15	**P1PS020KS7G0015**
20	**P1PS020KS7G0020**
25	**P1PS020KS7G0025**
30	**P1PS020KS7G0030**
40	**P1PS020KS7G0040**
50	**P1PS020KS7G0050**
60	**P1PS020KS7G0060**

Ø25mm - (M5)

Stroke mm	Order code
5	**P1PS025KS7G0005**
10	**P1PS025KS7G0010**
15	**P1PS025KS7G0015**
20	**P1PS025KS7G0020**
25	**P1PS025KS7G0025**
30	**P1PS025KS7G0030**
40	**P1PS025KS7G0040**
50	**P1PS025KS7G0050**
60	**P1PS025KS7G0060**

Ø32mm - (G1/8)

Stroke mm	Order code
5	**P1PS032KS7G0005**
10	**P1PS032KS7G0010**
15	**P1PS032KS7G0015**
20	**P1PS032KS7G0020**
25	**P1PS032KS7G0025**
30	**P1PS032KS7G0030**
40	**P1PS032KS7G0040**
50	**P1PS032KS7G0050**
60	**P1PS032KS7G0060**
80	**P1PS032KS7G0080**

Ø40mm - (G1/8)

Stroke mm	Order code
5	**P1PS040KS7G0005**
10	**P1PS040KS7G0010**
15	**P1PS040KS7G0015**
20	**P1PS040KS7G0020**
25	**P1PS040KS7G0025**
30	**P1PS040KS7G0030**
40	**P1PS040KS7G0040**
50	**P1PS040KS7G0050**
60	**P1PS040KS7G0060**
80	**P1PS040KS7G0080**

Ø50mm - (G1/8)

Stroke mm	Order code
5	**P1PS050KS7G0005**
10	**P1PS050KS7G0010**
15	**P1PS050KS7G0015**
20	**P1PS050KS7G0020**
25	**P1PS050KS7G0025**
30	**P1PS050KS7G0030**
40	**P1PS050KS7G0040**
50	**P1PS050KS7G0050**
60	**P1PS050KS7G0060**
80	**P1PS050KS7G0080**

Ø63mm - (G1/8)

Stroke mm	Order code
5	**P1PS063KS7G0005**
10	**P1PS063KS7G0010**
15	**P1PS063KS7G0015**
20	**P1PS063KS7G0020**
25	**P1PS063KS7G0025**
30	**P1PS063KS7G0030**
40	**P1PS063KS7G0040**
50	**P1PS063KS7G0050**
60	**P1PS063KS7G0060**
80	**P1PS063KS7G0080**

Ø80mm - (G1/8)

Stroke mm	Order code
5	**P1PS080KS7G0005**
10	**P1PS080KS7G0010**
15	**P1PS080KS7G0015**
20	**P1PS080KS7G0020**
25	**P1PS080KS7G0025**
30	**P1PS080KS7G0030**
40	**P1PS080KS7G0040**
50	**P1PS080KS7G0050**
60	**P1PS080KS7G0060**
80	**P1PS080KS7G0080**
100	**P1PS080KS7G0100**

Ø100mm - (G1/8)

Stroke mm	Order code
10	**P1PS100KS7G0010**
15	**P1PS100KS7G0015**
20	**P1PS100KS7G0020**
25	**P1PS100KS7G0025**
30	**P1PS100KS7G0030**
40	**P1PS100KS7G0040**
50	**P1PS100KS7G0050**
60	**P1PS100KS7G0060**
80	**P1PS100KS7G0080**
100	**P1PS100KS7G0100**

Sensors



For sensors see page 77.

Tel: +45 63 12 83 00 | Email: ps@hymatik.com | www.hymatik.com | Hvidkaervej 27a, DK-5250 Odense SV, Denmark

Double acting - Low temperature

This P1P cylinder version is developed for use in temperatures down to -40°C. It is available in bore sizes 20 - 100 mm. With the combination of compactness and corrosion resistance the P1P low temperature version can be used in many industries e.g. Bus, Truck and Rail applications.

*** Low temperature order code.**
Place **L** in position **9** of the order code
Example: P1PS020DL7G0005





Double acting - High temperature

Use this P1P cylinder version, available in bore sizes 20 - 100 mm, for high temperature applications with temperatures up to +120°C. The chemical resistance thanks to the design in anodised aluminium is an advantage in many high temperature applications.

*** High temperature order code.**
Place **F** in position **9** of the order code
Example: P1PS020DF7G0005





Double acting - Female threaded piston rod

Ø20mm - (M5)

Stroke mm	Order code
5	**P1PS020D * 7G0005**
10	**P1PS020D * 7G0010**
15	**P1PS020D * 7G0015**
20	**P1PS020D * 7G0020**
25	**P1PS020D * 7G0025**
30	**P1PS020D * 7G0030**
40	**P1PS020D * 7G0040**
50	**P1PS020D * 7G0050**
60	**P1PS020D * 7G0060**

Ø25mm - (M5)

Stroke mm	Order code
5	**P1PS025D * 7G0005**
10	**P1PS025D * 7G0010**
15	**P1PS025D * 7G0015**
20	**P1PS025D * 7G0020**
25	**P1PS025D * 7G0025**
30	**P1PS025D * 7G0030**
40	**P1PS025D * 7G0040**
50	**P1PS025D * 7G0050**
60	**P1PS025D * 7G0060**

Ø32mm - (G1/8)

Stroke mm	Order code
5	**P1PS032D * 7G0005**
10	**P1PS032D * 7G0010**
15	**P1PS032D * 7G0015**
20	**P1PS032D * 7G0020**
25	**P1PS032D * 7G0025**
30	**P1PS032D * 7G0030**
40	**P1PS032D * 7G0040**
50	**P1PS032D * 7G0050**
60	**P1PS032D * 7G0060**
80	**P1PS032D * 7G0080**

Ø40mm - (G1/8)

Stroke mm	Order code
5	**P1PS040D * 7G0005**
10	**P1PS040D * 7G0010**
15	**P1PS040D * 7G0015**
20	**P1PS040D * 7G0020**
25	**P1PS040D * 7G0025**
30	**P1PS040D * 7G0030**
40	**P1PS040D * 7G0040**
50	**P1PS040D * 7G0050**
60	**P1PS040D * 7G0040**
80	**P1PS040D * 7G0050**

Ø50mm - (G1/8)

Stroke mm	Order code
5	**P1PS050D * 7G0005**
10	**P1PS050D * 7G0010**
15	**P1PS050D * 7G0015**
20	**P1PS050D * 7G0020**
25	**P1PS050D * 7G0025**
30	**P1PS050D * 7G0030**
40	**P1PS050D * 7G0040**
50	**P1PS050D * 7G0050**
60	**P1PS050D * 7G0060**
80	**P1PS050D * 7G0080**

Ø63mm - (G1/8)

Stroke mm	Order code
5	**P1PS063D * 7G0005**
10	**P1PS063D * 7G0010**
15	**P1PS063D * 7G0015**
20	**P1PS063D * 7G0020**
25	**P1PS063D * 7G0025**
30	**P1PS063D * 7G0030**
40	**P1PS063D * 7G0040**
50	**P1PS063D * 7G0050**
60	**P1PS063D * 7G0060**
80	**P1PS063D * 7G0080**

Ø80mm - (G1/8)

Stroke mm	Order code
5	**P1PS080D * 7G0005**
10	**P1PS080D * 7G0010**
15	**P1PS080D * 7G0015**
20	**P1PS080D * 7G0020**
25	**P1PS080D * 7G0025**
30	**P1PS080D * 7G0030**
40	**P1PS080D * 7G0040**
50	**P1PS080D * 7G0050**
60	**P1PS080D * 7G0060**
80	**P1PS080D * 7G0080**
100	**P1PS080D * 7G0100**

Ø100mm - (G1/8)

Stroke mm	Order code
10	**P1PS100D * 7G0010**
15	**P1PS100D * 7G0015**
20	**P1PS100D * 7G0020**
25	**P1PS100D * 7G0025**
30	**P1PS100D * 7G0030**
40	**P1PS100D * 7G0040**
50	**P1PS100D * 7G0050**
60	**P1PS100D * 7G0060**
80	**P1PS100D * 7G0080**
100	**P1PS100D * 7G0100**

Sensors
Low temperature only



For sensors see page 77.

Tel: +45 63 12 83 00 | Email: ps@hymatik.com | www.hymatik.com | Hvidkaervej 27a, DK-5250 Odense SV, Denmark

Dimensions - Bore 20 - 63mm

P1PS...DS7G Double acting with female piston rod thread

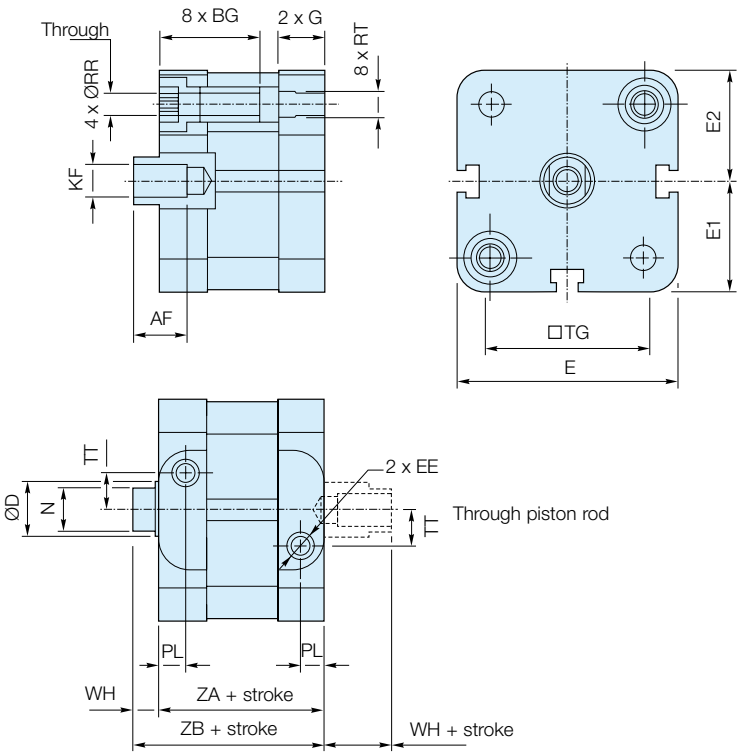

P1PG...DS Double acting with guided piston rod

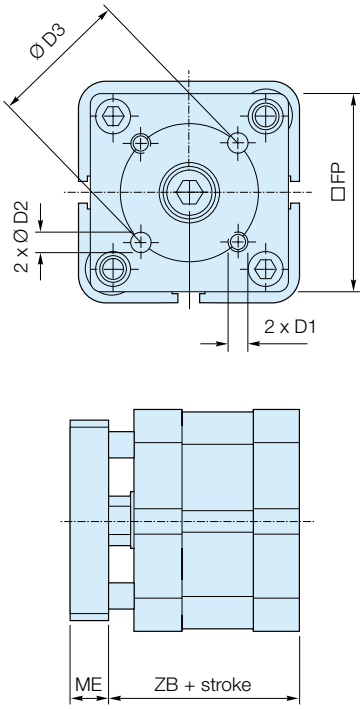

Bore size	AF min	BG min	ØD	D1	ØD2 H8	ØD3	EE	E	E1	E2	FP	G	KF	ME	N h14	PL	ØRR min	RT	TG	TT	WH	ZA ± 0,3	ZB ± 0,6
Ø20	10	15	10	M4	4	17	M5	38,0	19,0	19,1	35	11,60	M6	8	8	7,6	4,1	M5	22,0	4,0	6	37	43
Ø25	10	15	10	M5	5	22	M5	41,0	20,5	20,6	38	11,90	M6	8	8	7,5	4,1	M5	26,0	5,5	6	39	45
Ø32	12	16	12	M5	5	28	G1/8	49,4	24,7	24,9	45	15,25	M8	10	10	7,8	5,1	M6	32,5	6,5	7	44	51
Ø40	12	16	12	M5	5	33	G1/8	56,0	28,0	28,5	50	15,25	M8	10	10	8,0	5,1	M6	38,0	8,0	7	45	52
Ø50	16	16	16	M6	6	42	G1/8	67,0	33,5	33,7	60	14,30	M10	12	13	7,7	6,4	M8	46,5	11,0	8	45	53
Ø63	16	16	16	M6	6	50	G1/8	79,0	39,5	39,8	70	16,30	M10	12	13	8,0	6,4	M8	56,5	16,0	8	49	57

P1PS...DS8G Double acting with male piston rod thread

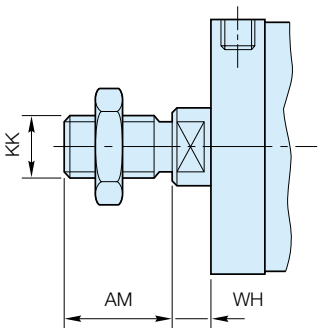

Bore size	AM +0 -0.5	WH nom.	WH tol.	KK
Ø20	16	6	± 1,6	M8 x 1,25
Ø25	16	6	± 1,6	M8 x 1,25
Ø32	19	7	± 1,6	M10 x 1,25
Ø40	19	7	± 1,6	M10 x 1,25
Ø50	22	8	± 1,6	M12 x 1,25
Ø63	22	8	± 1,6	M12 x 1,25

Note: Cylinders with male piston rod thread are delivered with one piston rod nut in zinc plated steel

Tel: +45 63 12 83 00 | Email: ps@hymatik.com | www.hymatik.com | Hvidkaervej 27a, DK-5250 Odense SV, Denmark

Dimensions - Bore 80 - 100mm

P1PS...DS7G Double acting with female piston rod thread

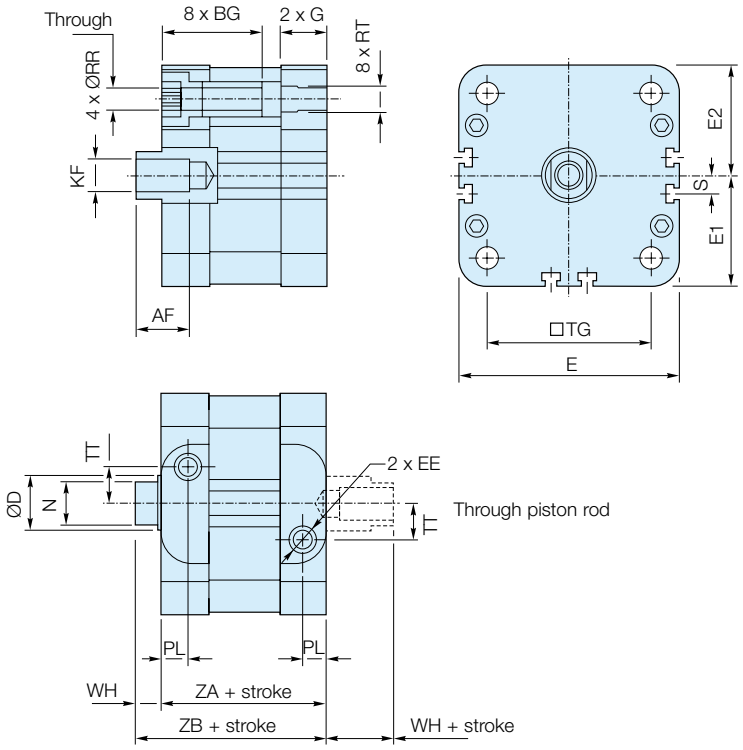

P1PG...DS Double acting with guided piston rod

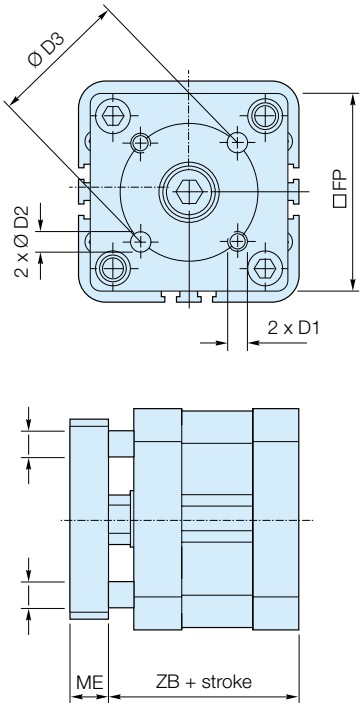

Bore size	AF min	BG min	ØD	D1	ØD2 H8	ØD3	EE	E	E1	E2	FP	G	KF	ME	N h14	PL	ØRR min	RT	S	TG	TT	WH ± 0,3	ZA ± 0,6	ZB
Ø80	20	17	20	M8	8	65	G1/8	96	48,0	48,2	90	17,7	M12	14	17	10,5	8,4	M10	8	72	20	10	54	64
Ø100	20	17	25	M10	10	80	G1/8	115	57,5	57,7	110	23,0	M12	14	21	12,0	8,4	M10	18,5	89	24	10	67	77

P1PS...DS8G Double acting with male piston rod thread

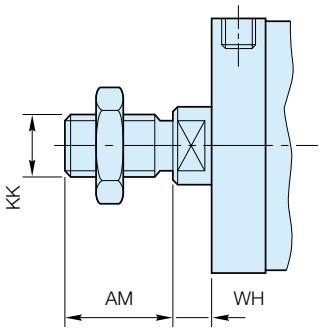

Bore size	AM +0 -0.5	WH nom.	WH tol.	KK
Ø80	28	10	± 1,6	M16 x 1,5
Ø100	28	10	± 1,6	M16 x 1,5

Note: Cylinders with male piston rod thread are delivered with one piston rod nut in zinc plated steel

Tel: +45 63 12 83 00 | Email: ps@hymatik.com | www.hymatik.com | Hvidkaervej 27a, DK-5250 Odense SV, Denmark

	Flange MF1 / MF2 [1]	Foot brackets MS1 [2]	Pivot bracket with rigid bearing AB7 [3]	Clevis bracket MP2 [4]	Clevis bracket MP4 [5]
					
Ø 20	P1P-4HMB	P1P-4HMF			P1P-4HME
Ø 25	P1P-4JMB	P1P-4JMF			P1P-4JME
Ø 32	P1C-4KMB	P1C-4KMF	P1C-4KMD	P1C-4KMT	P1C-4KME
Ø 40	P1C-4LMB	P1C-4LMF	P1C-4LMD	P1C-4LMT	P1C-4LME
Ø 50	P1C-4MMB	P1C-4MMF	P1C-4MMD	P1C-4MMT	P1C-4MME
Ø 63	P1C-4NMB	P1C-4NMF	P1C-4NMD	P1C-4NMT	P1C-4NME
Ø 80	P1C-4PMB	P1C-4PMF	P1C-4PMD	P1C-4PMT	P1C-4PME
Ø 100	P1C-4QMB	P1C-4QMF	P1C-4QMD	P1C-4QMT	P1C-4QME

	Clevis bracket AB6 [6]	Pivot bracket with swivel bearing CS7 [7]	Swivel eye bracket MP6 [8]	3 and 4 positions flange JP1	Swivel rod eye AP6 [10]
					
Ø 20					P1A-4HRS
Ø 25					P1A-4HRS
Ø 32	P1C-4KMCA	P1C-4KMA	P1C-4KMSA	P1E-6KB0	P1C-4KRS
Ø 40	P1C-4LMCA	P1C-4LMA	P1C-4LMSA	P1E-6LB0	P1C-4KRS
Ø 50	P1C-4MMCA	P1C-4MMA	P1C-4MMSA	P1E-6MB0	P1C-4LRS
Ø 63	P1C-4NMCA	P1C-4NMA	P1C-4NMSA	P1E-6NB0	P1C-4LRS
Ø 80	P1C-4PMCA	P1C-4PMA	P1C-4PMSA	P1E-6PB0	P1C-4MRS
Ø 100	P1C-4QMCA	P1C-4QMA	P1C-4QMSA	P1E-6QB0	P1C-4MRS

	Clevis AP2 [11]	Flexo coupling [12] PM5	Zinc-plated nut MR9 (Pack of 10 off)
			
Ø 20	P1A-4HRC	P1C-4HRF	P14-4HRPZ
Ø 25	P1A-4HRC	P1C-4HRF	P14-4HRPZ
Ø 32	P1C-4KRC	P1C-4KRF	P14-4KRPZ
Ø 40	P1C-4KRC	P1C-4KRF	P14-4KRPZ
Ø 50	P1C-4LRC	P1C-4LRF	P14-4LRPZ
Ø 63	P1C-4LRC	P1C-4LRF	P14-4LRPZ
Ø 80	P1C-4MRC	P1C-4MRF	P14-4MRPZ
Ø 100	P1C-4MRC	P1C-4MRF	P14-4MRPZ

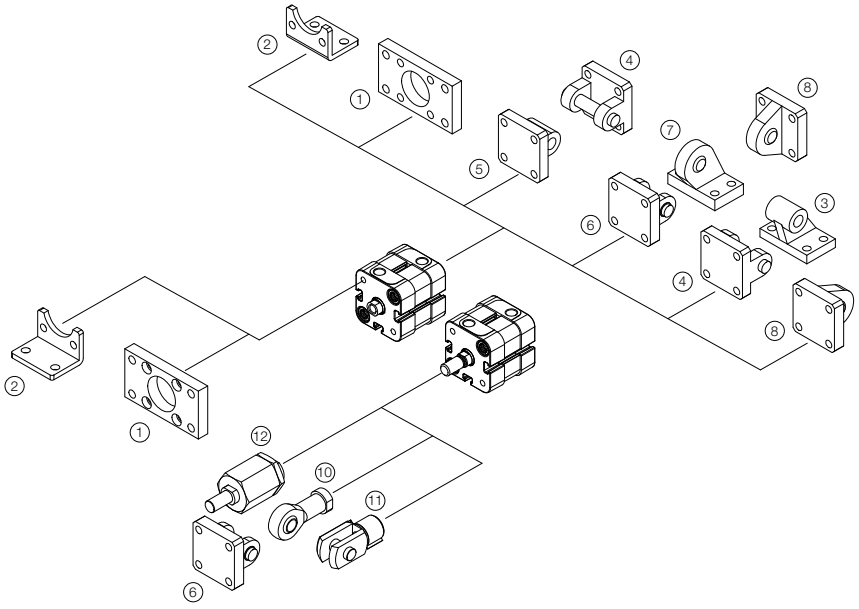

Tel: +45 63 12 83 00 | Email: ps@hymatik.com | www.hymatik.com | Hvidkaervej 27a, DK-5250 Odense SV, Denmark

Cylinder mountings

Flange MF1/MF2



Intended for fixed mounting of cylinder. Flange can be fitted to front- or rear end-plates of cylinder.

Materials
Flange: Surface-treated steel
Mounting screws according to DIN 6912: Zinc-plated steel 8.8

Supplied complete with mounting screws for attachment to cylinder.

Cyl. bore Ø mm	Weight kg	Order code
20	0,17	**P1P-4HMB**
25	0,20	**P1P-4JMB**
32	0,23	**P1C-4KMB**
40	0,28	**P1C-4LMB**
50	0,53	**P1C-4MMB**
63	0,71	**P1C-4NMB**
80	1,59	**P1C-4PMB**
100	2,19	**P1C-4QMB**

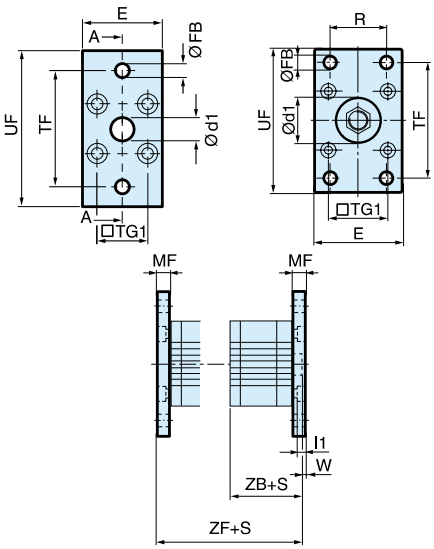

Cyl. bore mm	d1 H11 mm	FB H13 mm	TG1 mm	E mm	R JS14 mm	MF JS14 mm	TF JS14 mm	UF mm	I1 -0,5 mm	W mm	ZF* mm	ZB* mm
20	12,0	6,6	22,0	36	-	10,0	55,0	70	5,4	4,0	53,0	43,0
25	12,0	6,6	26,0	40	-	10,0	60,0	76	5,4	4,0	55,0	45,0
32	30,0	7,0	32,5	45	32	10,0	64,0	80	5,0	3,0	61,0	41,0
40	35,0	9,0	38,0	52	36	10,0	72,0	90	5,0	3,0	52,0	52,0
50	40,0	9,0	46,5	65	45	12,0	90,0	110	6,5	4,0	65,0	53,0
63	45,0	9,0	56,5	75	50	12,0	100,0	120	6,5	4,0	69,0	57,0
80	45,0	12,0	72,0	95	63	16,0	126,0	150	8,0	6,0	80,0	64,0
100	55,0	14,0	89,0	115	75	16,0	150,0	170	8,0	6,0	93,0	77,0

S = Stroke length

Foot brackets MS1



Intended for fixed mounting of cylinder. Angle bracket can be fitted to front- and rear end-plates of cylinder.

Materials
Foot bracket: Surface-treated steel, black
Mounting screws according to DIN 912: Zinc-plated steel 8.8

Supplied in pairs with mounting screws for attachment to cylinder.

Cyl. bore Ø mm	Weight kg	Order code
20	0,04**	**P1P-4HMF**
25	0,05**	**P1P-4JMF**
32	0,06**	**P1C-4KMF**
40	0,08**	**P1C-4LMF**
50	0,16**	**P1C-4MMF**
63	0,25**	**P1C-4NMF***
80	0,50**	**P1C-4PMF**
100	0,85**	**P1C-4QMF***

** Weight per item

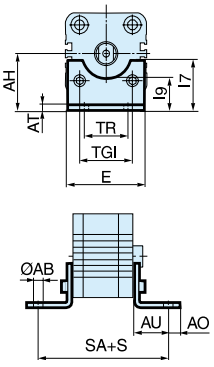

Cyl. bore mm	AB H14 mm	TG1 mm	E mm	TR JS14 mm	AO mm	AU mm	AH JS15 mm	I7 mm	AT mm	I9 JS14 mm	SA** mm
20	6,6	22,0	36	26	6,0	16,0	27	22,0	4,0	17,0	69,0
25	6,6	26,0	40	26	6,0	16,0	30	23,0	4,0	19,0	71,0
32	7,0	32,5	45	32	10,0	24,0	32	30,0	4,5	17,5	92,0
40	9,0	38,0	52	36	8,0	28,0	36	30,0	4,5	18,5	101,0
50	9,0	46,5	65	45	13,0	32,0	45	36,0	5,5	25,0	109,0
63	9,0	56,5	75	50	13,0	32,0	50	35,0	5,5	27,5	113,0
80	12,0	72,0	95	63	14,0	41,0	63	49,0	6,5	40,5	136,0
100	14,0	89,0	115	75	15,0	41,0	71	54,0	6,5	43,5	149,0

S = Stroke length

Tel: +45 63 12 83 00 | Email: ps@hymatik.com | www.hymatik.com | Hvidkaervej 27a, DK-5250 Odense SV, Denmark

Cylinder mountings

Pivot bracket with rigid bearing AB7



Intended for flexible mounting of cylinder. The pivot bracket can be combined with clevis bracket MP2.

Materials
Pivot bracket: Surface-treated aluminium, black
Bearing: Sintered oil-bronze bushing

Cyl. bore Ø mm	Weight kg	Order code
32	0,06	**P1C-4KMD**
40	0,08	**P1C-4LMD**
50	0,15	**P1C-4MMD**
63	0,20	**P1C-4NMD**
80	0,33	**P1C-4PMD**
100	0,49	**P1C-4QMD**

Cyl. bore mm	CK H9 mm	S5 H13 mm	K1 JS14 mm	K2 mm	G1 JS14 mm	G2 JS14 mm	EM mm	G3 mm	CA JS15 mm	H6 mm	R1 mm
32	10	6,6	38	51	21	18	25,5	31	32	8	10
40	12	6,6	41	54	24	22	27,0	35	36	10	11
50	12	9,0	50	65	33	30	31,0	45	45	12	13
63	16	9,0	52	67	37	35	39,0	50	50	12	15
80	16	11,0	66	86	47	40	49,0	60	63	14	15
100	20	11,0	76	96	55	50	59,0	70	71	15	19

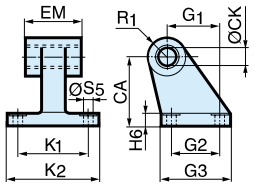

Clevis bracket MP2



Intended for flexible mounting of cylinder. Clevis bracket MP2 can be combined with clevis bracket MP4.

Materials
Clevis bracket: Surface-treated aluminium, black
Mounting screws according to DIN 912:
Zinc-plated steel 8.8
Pin: surface treated steel

Supplied complete with mounting screws for attachment to cylinder.

Cyl. bore Ø mm	Weight kg	Order code
32	0,08	**P1C-4KMT**
40	0,11	**P1C-4LMT**
50	0,14	**P1C-4MMT**
63	0,29	**P1C-4NMT**
80	0,36	**P1C-4PMT**
100	0,64	**P1C-4QMT**

Cyl. bore mm	E mm	UB h14 mm	CB H14 mm	FL ±0,2 mm	L mm	l2 mm	CD H9 mm	MR mm	XD* mm
32	45,0	45	26,0	22	13	5,5	10	10	73,0
40	52,0	52	28,0	25	16	5,5	12	12	77,0
50	65,0	60	32,0	27	16	6,5	12	12	80,0
63	75,0	70	40,0	32	21	6,5	16	16	89,0
80	95,0	90	50,0	36	22	10,0	16	16	100,0
100	115,0	110	60,0	41	27	10,0	20	20	118,0

S = Stroke length

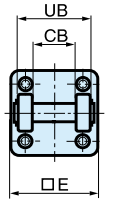

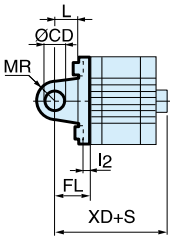

Tel: +45 63 12 83 00 | Email: ps@hymatik.com | www.hymatik.com | Hvidkaervej 27a, DK-5250 Odense SV, Denmark

Cylinder mountings

Clevis bracket MP4



Intended for flexible mounting of cylinder. Clevis bracket MP4 can be combined with clevis bracket MP2.

Materials
Clevis bracket: Surface-treated aluminium, black
Mounting screws according to DIN 912: Zinc-plated steel 8.8

Supplied complete with mounting screws for attachment to cylinder.

Cyl. bore Ø mm	Weight kg	Order code
20	0.04	**P1P-4HME**
25	0.05	**P1P-4JME**
32	0,09	**P1C-4KME**
40	0,13	**P1C-4LME**
50	0,17	**P1C-4MME**
63	0,36	**P1C-4NME**
80	0,46	**P1C-4PME**
100	0,83	**P1C-4QME**

Cyl. bore mm	E mm	EW mm	FL ±0,2 mm	L mm	l2 mm	CD H9 mm	MR mm	XD* mm
20	34,0	16,0	20	14	2,6	8	8	63,0
25	38,0	16,0	20	14	2,6	8	8	65,0
32	45,0	26,0	22	13	5,5	10	10	73,0
40	52,0	28,0	25	16	5,5	12	12	77,0
50	65,0	32,0	27	16	6,5	12	12	80,0
63	75,0	40,0	32	21	6,5	16	16	89,0
80	95,0	50,0	36	22	10,0	16	16	100,0
100	115,0	60,0	41	27	10,0	20	20	118,0

S = Stroke length

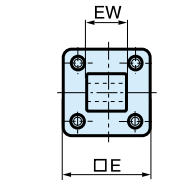

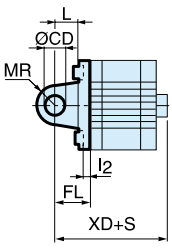

Clevis bracket AB6



Intended for flexible mounting of cylinder. Clevis bracket GA can be combined with pivot bracket with swivel bearing, swivel eye bracket and swivel rod eye.

Materials
Clevis bracket: Surface-treated aluminium, black
Pin: Surface hardened steel
Locking pin: Spring steel
Circlips according to DIN 471: Spring steel
Mounting screws acc. to DIN 912: Zinc-plated steel 8.8

Supplied complete with mounting screws for attachment to cylinder.

Cyl. bore Ø mm	Weight kg	Order code
32	0,09	**P1C-4KMCA**
40	0,13	**P1C-4LMCA**
50	0,17	**P1C-4MMCA**
63	0,36	**P1C-4NMCA**
80	0,58	**P1C-4PMCA**
100	0,89	**P1C-4QMCA**

Cyl. bore mm	E mm	B2 d12 mm	B1 H14 mm	T mm	B3 mm	R2 mm	L1 mm	FL ±0,2 mm	l2 mm	L mm	CN F7 mm	R1 mm	XD* mm
32	45	34	14	3	3,3	17	11,5	22	5,5	12	10	11	73,0
40	52	40	16	4	4,3	20	12,0	25	5,5	15	12	13	77,0
50	65	45	21	4	4,3	22	14,0	27	6,5	17	16	18	80,0
63	75	51	21	4	4,3	25	14,0	32	6,5	20	16	18	89,0
80	95	65	25	4	4,3	30	16,0	36	10,0	20	20	22	100,0
100	115	75	25	4	4,3	32	16,0	41	10,0	25	20	22	118,0

S = Stroke length

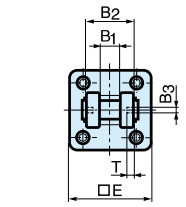

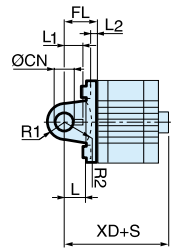

Stainless steel Pin Set AB6
Materials
Pin: Stainless steel
Locking pin: Stainless steel
Circlips according to DIN 471: Stainless steel

Cyl. bore Ø mm	Weight kg	Order code
32	0,05	**9301054311**
40	0,06	**9301054312**
50	0,07	**9301054313**
63	0,07	**9301054314**
80	0,17	**9301054315**
100	0,31	**9301054316**

Tel: +45 63 12 83 00 | Email: ps@hymatik.com | www.hymatik.com | Hvidkaervej 27a, DK-5250 Odense SV, Denmark

Cylinder mountings

Pivot bracket with swivel bearing CS7



Intended for use together with clevis bracket GA.

Material
Pivot bracket: Surface-treated steel, black
Swivel bearing according to DIN 648K: Hardened steel

Cyl. bore Ø mm	Weight kg	Order code
32	0,18	**P1C-4KMA**
40	0,25	**P1C-4LMA**
50	0,47	**P1C-4MMA**
63	0,57	**P1C-4NMA**
80	1,05	**P1C-4PMA**
100	1,42	**P1C-4QMA**

Cyl. bore mm	CN H7 mm	S5 H13 mm	K1 JS14 mm	K2 mm	EU mm	G1 JS14 mm	G2 JS14 mm	EN mm	G3 mm	CH JS15 mm	H6 mm	ER mm	Z
32	10	6,6	38	51	10,5	21	18	14	31	32	10	16	4°
40	12	6,6	41	54	12,0	24	22	16	35	36	10	18	4°
50	16	9,0	50	65	15,0	33	30	21	45	45	12	21	4°
63	16	9,0	52	67	15,0	37	35	21	50	50	12	23	4°
80	20	11,0	66	86	18,0	47	40	25	60	63	14	28	4°
100	20	11,0	76	96	18,0	55	50	25	70	71	15	30	4°

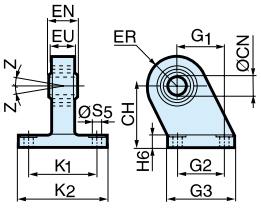

Swivel eye bracket MP6



Intended for use together with clevis bracket GA

Material
Bracket: Surface-treated aluminium, black
Swivel bearing acc. to DIN 648K: Hardened steel

Supplied complete with mounting screws for attachment to cylinder.

Cyl. bore Ø mm	Weight kg	Order code
32	0,08	**P1C-4KMSA**
40	0,11	**P1C-4LMSA**
50	0,20	**P1C-4MMSA**
63	0,27	**P1C-4NMSA**
80	0,52	**P1C-4PMSA**
100	0,72	**P1C-4QMSA**

Cyl. bore mm	E mm	B1 mm	B2 mm	EN mm	R1 mm	R2 mm	FL mm	l2 mm	L mm	CN H7 mm	XD* mm	XD2* mm	Z
32	45	10,5	38	14	16	14	22	5,5	12	10	70,5	79,0	4°
40	52	12,0	44	16	18	16	25	5,5	15	12	75,5	83,5	4°
50	65	15,0	51	21	21	19	27	6,5	15	16	79,5	86,0	4°
63	75	15,0	56	21	23	22	32	6,5	20	16	90,0	95,5	4°
80	95	18,0	-	25	29	-	36	10,0	20	20	210,0	-	4°
100	115	18,0	-	25	31	-	41	10,0	25	20	230,0	-	4°

S=Stroke length

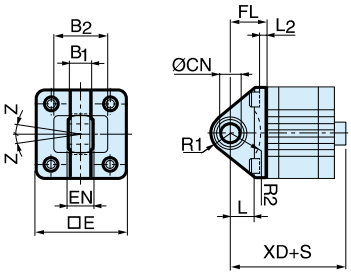

3 and 4 positions flange JP1



Mounting kit for back to back mounted cylinders, 3 and 4 position cylinders.

Material:
Mounting: Aluminium
Mounting screws: Zinc-plated steel 8.8

Cyl. bore Ø mm	Weight kg	Order code
32	0,060	**P1E-6KB0**
40	0,078	**P1E-6LB0**
50	0,162	**P1E-6MB0**
63	0,194	**P1E-6NB0**
80	0,450	**P1E-6PB0**
100	0,672	**P1E-6QB0**

Cyl. bore mm	E mm	TG mm	ØFB mm	MF mm	A mm	ØBA mm
32	50	32,5	6,5	5	16	30
40	60	38,0	6,5	5	16	35
50	66	46,5	8,5	6	20	40
63	80	56,5	8,5	6	20	45
80	100	72,0	10,5	8	25	45
100	118	89,0	10,5	8	25	55

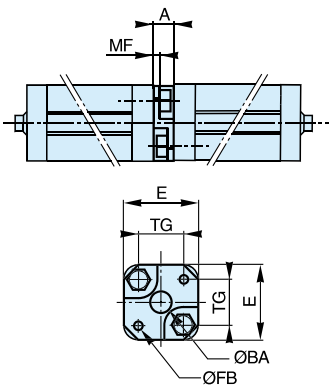

Tel: +45 63 12 83 00 | Email: ps@hymatik.com | www.hymatik.com | Hvidkaervej 27a, DK-5250 Odense SV, Denmark

Piston rod mountings

Swivel rod eye AP6



Swivel rod eye for articulated mounting of cylinder. Swivel rod eye can be combined with clevis bracket GA.
Maintenance-free.

Materials
Swivel rod eye: Zinc-plated steel
Swivel bearing according to DIN 648K: Hardened steel

Cyl. bore Ø mm	Weight kg	Order code
20 / 25	0,045	**P1A-4HRS**
32 / 40	0,08	**P1C-4KRS**
50 / 63	0,12	**P1C-4LRS**
80 / 100	0,25	**P1C-4MRS**

Stainless steel swivel rod eye AP6



Stainless-steel swivel rod eye for articulated mounting of cylinder. Swivel rod eye can be combined with clevis bracket GA.
Maintenance-free.

Materials
Swivel rod eye: Stainless steel
Swivel bearing according to DIN 648K: Stainless steel

Use stainless steel nut with stainless steel swivel rod eye.

Cyl. bore Ø mm	Weight kg	Order code
20 / 25	0,045	**P1S-4HRT**
32 / 40	0,08	**P1S-4JRT**
50 / 63	0,12	**P1S-4LRT**
80 / 100	0,25	**P1S-4MRT**

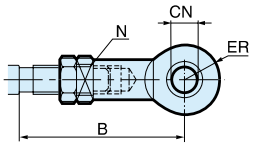

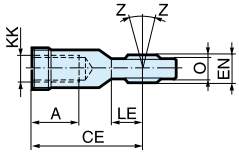

Cyl. bore mm	A mm	B min mm	B max mm	CE mm	CN H9 mm	EN h12 mm	ER mm	KK	LE mm	N min mm	O mm	Z
20 / 25	12	40,0	45	36	8	12	12	M8x1,25	12	13	9,0	12°
32 / 40	20	48,0	55	43	10	14	14	M10x1,25	15	17	10,5	12°
50 / 63	22	56,0	62	50	12	16	16	M12x1,25	17	19	12,0	12°
80 / 100	28	72,0	80	64	16	21	21	M16x1,5	22	22	15,0	15°

Clevis AP2



Clevis for articulated mounting of cylinder.

Material
Clevis, clip: Galvanized steel
Pin: Hardened steel

Cyl. bore Ø mm	Weight kg	Order code
20 / 25	0,045	**P1A-4HRC**
32 / 40	0,09	**P1C-4KRC**
50 / 63	0,15	**P1C-4LRC**
80 / 100	0,35	**P1C-4MRC**

Stainless steel clevis AP2



Stainless-steel clevis for articulated mounting of cylinder.

Material
Clevis: Stainless steel
Pin: Stainless steel
Circlips according to DIN 471: Stainless steel

Use stainless steel nut with stainless steel swivel rod eye.

Cyl. bore Ø mm	Weight kg	Order code
20 / 25	0,045	**P1S-4HRD**
32 / 40	0,09	**P1S-4JRD**
50 / 63	0,15	**P1S-4LRD**
80 / 100	0,35	**P1S-4MRD**

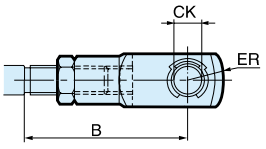

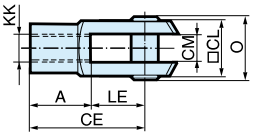

Cyl. bore mm	A mm	B min mm	B max mm	CE mm	CK h11/E9 mm	CL mm	CM mm	ER mm	KK	LE mm	O mm
20 / 25	16	36,0	41	32	8	16	8	-	M8x1,25	16	24,0
32 / 40	20	45,0	52	40	10	20	10	16	M10x1,25	20	28,0
50 / 63	24	54,0	60	48	12	24	12	19	M12x1,25	24	32,0
80 / 100	32	72,0	80	64	16	32	16	25	M16x1,5	32	41,5

Parker Hannifin Corporation
Pneumatic Division - Europe

Tel: +45 63 12 83 00 | Email: ps@hymatik.com | www.hymatik.com | Hvidkaervej 27a, DK-5250 Odense SV, Denmark

Piston rod mountings

Flexo coupling PM5



Flexo coupling for articulated mounting of piston rod.
Flexo fitting is intended to take up axial angle errors within a range of ±4°.

Material
Flexo coupling, nut: Zinc-plated steel

Supplied complete with galvanized adjustment nut.

Cyl. bore Ø mm	Weight kg	Order code
20 / 25	0,06	**P1C-4HRF**
32 / 40	0,23	**P1C-4KRF**
50 / 63	0,23	**P1C-4LRF**
80 / 100	0,65	**P1C-4MRF**

Cyl. bore mm	KK mm	B mm	C mm	D mm	E mm	ØF mm	SW1 mm	SW2 mm	SW3 mm	SW4 mm	SW5 mm
20 / 25	M8x1.25	16	14	55	20	12.4	7	17	17	10	13
32 / 40	M10x1.25	20	23	73	31	21	12	30	30	19	17
50 / 63	M12x1.5	24	23	77	31	21	12	30	30	19	19
80 / 100	M16x1.5	32	32	108	45	33.5	19	41	41	30	24

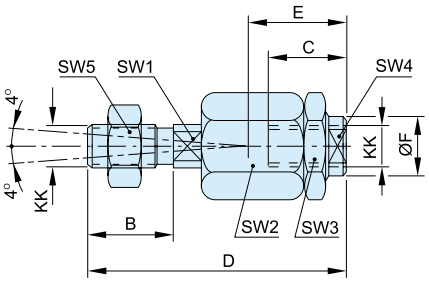

Nut MR9



Intended for fixed mounting of accessories to the piston rod.
Material: Zinc-plated steel

All P1D cylinders are delivered with a zinc-plated steel piston rod nut.

Supplied as pack of 10 off

Cyl. bore Ø mm	Weight * kg	Order code
20 / 25	0,005	**P14-4HRPZ**
32 / 40	0,007	**P14-4KRPZ**
50 / 63	0,021	**P14-4LRPZ**
80 / 100	0,040	**P14-4MRPZ**

* Weight per item

Stainless steel nut MR9



Intended for fixed mounting of accessories to the piston rod.

Material: Stainless steel A2

All P1D cylinders are delivered with a zinc-plated steel piston rod nut.

Supplied as pack of 10 off

Cyl. bore Ø mm	Weight * kg	Order code
20 / 25	0,005	**P14-4HRPS**
32 / 40	0,007	**P14-4KRPS**
50 / 63	0,021	**P14-4LRPS**
80 / 100	0,040	**P14-4MRPS**

* Weight per item

According to DIN 439 B

Cyl. bore mm	d	M mm	S mm
20 / 25	M8x1,25		
32 / 40	M10x1,25	5,0	17
50 / 63	M12x1,25	6,0	19
80 / 100	M16x1,5	10,0	30

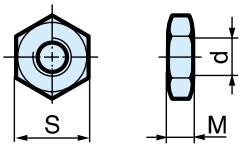









P1Q Series Compact Cylinders

According to ISO 15524



Parker's P1Q series cylinders provide an economical, compact design suited for a variety of applications. With its modular flexibility, the P1Q will provide the ideal solution machine builders need today. The P1Q series is available in 10 bore sizes from 12 mm to 100 mm and standard strokes from 5 mm to 100 mm. The cylinder is supplied in a choice of magnetic or non-magnetic function, the non-magnetic version offers very short axial dimensions. For optimum compactness the P1Q range is supplied with female piston rod thread.

The P1Q provides quieter operation due to its built in buffer cushioning, which is standard on all bore sizes. Included in bore sizes 40 mm – 100 mm is a piston wear ring providing superior life.

Tel: +45 63 12 83 00 | Email: ps@hymatik.com | www.hymatik.com | Hvidkaervej 27a, DK-5250 Odense SV, Denmark

The P1Q compact cylinder is ideal for applications where you need compact dimensions and high over-all performance. The versatile P1Q cylinder range provides a long trouble-free operation in a variety of applications.

- ISO 15524 conformity
- Compact and versatile
- Magnetic or non magnetic options
- Flush fit sensor range
- Buffer cushioning as standard
- Piston wear ring on Ø32 - Ø100mm
- Tapped both ends as standard

*** Non-magnetic cylinder order code.**
Place **B** in position **11** of the order code
Example: P1QS012DC7B0005



Operating information

Working pressure:	Max 10 bar
Permissible fluid:	Air, with or without lubrication
Standard working temperature:	-5°C to +60°C

Prelubricated, further lubrication is not normally necessary. If additional lubrication is introduced it must be continued.

For more information see www.parker.com/euro_pneumatic

Double acting - Magnetic - Female threaded piston rod

Ø12mm

Stroke mm	Order code
5	P1QS012DC7G0005
10	P1QS012DC7G0010
15	P1QS012DC7G0015
20	P1QS012DC7G0020
25	P1QS012DC7G0025
30	P1QS012DC7G0030

Ø16mm

Stroke mm	Order code
5	P1QS016DC7G0005
10	P1QS016DC7G0010
15	P1QS016DC7G0015
20	P1QS016DC7G0020
25	P1QS016DC7G0025
30	P1QS016DC7G0030

Ø20mm

Stroke mm	Order code
10	P1QS020DC7G0010
15	P1QS020DC7G0015
20	P1QS020DC7G0020
25	P1QS020DC7G0025
30	P1QS020DC7G0030
40	P1QS020DC7G0040
50	P1QS020DC7G0050

Ø25mm

Stroke mm	Order code
10	P1QS025DC7G0010
15	P1QS025DC7G0015
20	P1QS025DC7G0020
25	P1QS025DC7G0025
30	P1QS025DC7G0030
40	P1QS025DC7G0040
50	P1QS025DC7G0050

Ø32mm

Stroke mm	Order code
10	P1QS032DC7G0010
15	P1QS032DC7G0015
20	P1QS032DC7G0020
25	P1QS032DC7G0025
30	P1QS032DC7G0030
40	P1QS032DC7G0040
50	P1QS032DC7G0050
75	P1QS032DC7G0075
100	P1QS032DC7G0100

Ø40mm

Stroke mm	Order code
15	P1QS040DC7G0015
20	P1QS040DC7G0020
25	P1QS040DC7G0025
30	P1QS040DC7G0030
40	P1QS040DC7G0040
50	P1QS040DC7G0050
75	P1QS040DC7G0075
100	P1QS040DC7G0100

Ø50mm

Stroke mm	Order code
15	P1QS050DC7G0015
20	P1QS050DC7G0020
25	P1QS050DC7G0025
30	P1QS050DC7G0030
40	P1QS050DC7G0040
50	P1QS050DC7G0050
75	P1QS050DC7G0075
100	P1QS050DC7G0100

Ø63mm

Stroke mm	Order code
15	P1QS063DC7G0015
20	P1QS063DC7G0020
25	P1QS063DC7G0025
30	P1QS063DC7G0030
40	P1QS063DC7G0040
50	P1QS063DC7G0050
75	P1QS063DC7G0075

Ø80mm

Stroke mm	Order code
15	P1QS080DC7G0015
20	P1QS080DC7G0020
25	P1QS080DC7G0025
30	P1QS080DC7G0030
40	P1QS080DC7G0040
50	P1QS080DC7G0050
75	P1QS080DC7G0075

Ø100mm

Stroke mm	Order code
15	P1QS100DC7G0015
20	P1QS100DC7G0020
25	P1QS100DC7G0025
30	P1QS100DC7G0030
40	P1QS100DC7G0040
50	P1QS100DC7G0050
75	P1QS100DC7G0075

Tel: +45 63 12 83 00 | Email: ps@hymatik.com | www.hymatik.com | Hvidkaervej 27a, DK-5250 Odense SV, Denmark

Dimensions (mm)

Double acting, magnetic and non magnetic piston, elastic cushioning, piston rod with internal thread

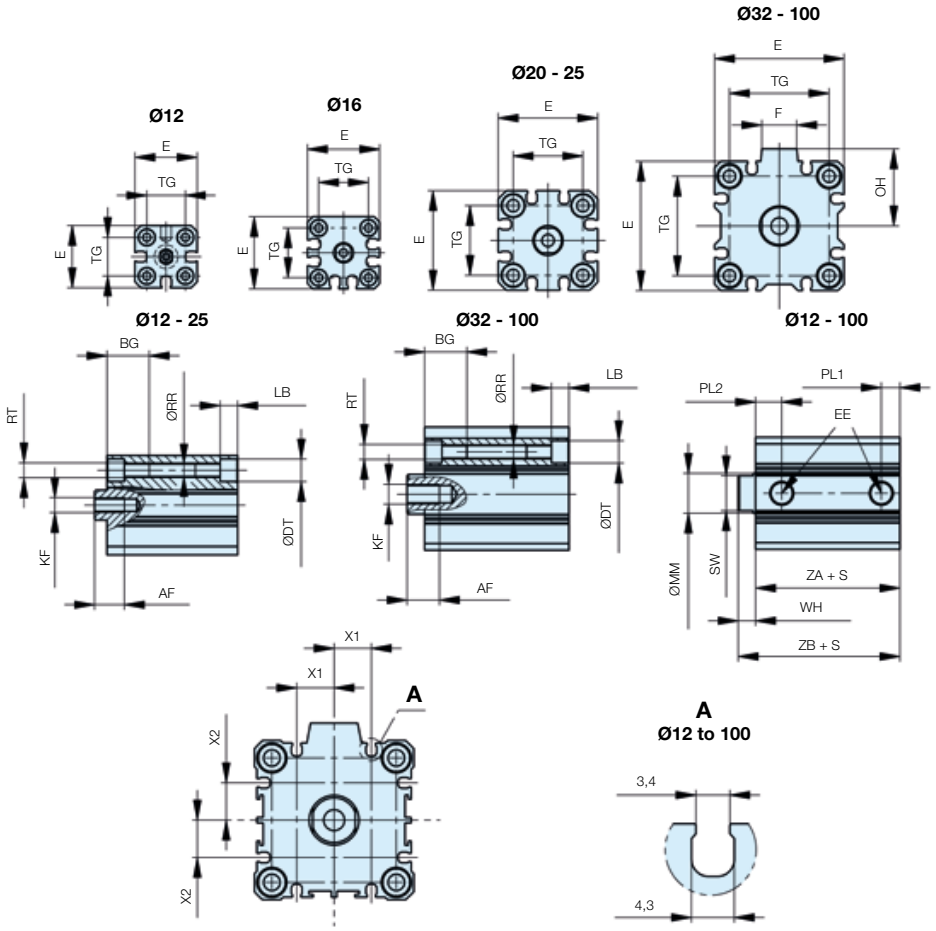

Dimensions - Non-magnetic

The non magnetic version is not in the ISO standard, ZA and ZB could be different depending on the cylinder's manufacturer
WH and ZB are without pressure in the cylinder, deformation of elastic bumpers under pressure gives different dimensions

Bore size Ø (mm)	E	TG	F	OH	RT 6H	BG	KF	AF	ØRR	LB	ØDT	ØMM f8	SW	PL1	PL2	EE	X1	X2	WH	ZA		ZB	
																				5 to 50mm	75 to 100mm	5 to 50mm	75 to 100mm
12	25	15,5 ±0,3	-	12,5	M4	11,0	M3	6	3,5	4,0	6,5	6	5	5,0	7,5	M5	0	0	3,5 ±1,5	17,0	-	20,5	-
16	29	20 ±0,3	-	14,5	M4	11,0	M4	8	3,5	4,0	6,5	8	6	5,0	7,5	M5	3,5	3,5	3,5 ±1,5	17,0	-	20,5	-
20	36	25,5 ±0,3	7,6	18,0	M6	17.0	M5	7	5,4	7,0	9,0	10	8	5,5	9,0	M5	5,5	5,5	4,5 ±1,5	19,5	-	24,0	-
25	40	28 ±0,3	16,4	20,0	M6	17,0	M6	12	5,4	7,0	9,0	12	10	5,5	11,0	M5	6,5	6,5	5 ±1,5	22,5	-	27,5	-
32	45	34 ±0,3	14,0	27,0	M6	17,0	M8	13	5,5	7,0	9,0	16	14	7,5	10,5	G1/8	10,0	10,0	7 ±2	23,0	33,0	30,0	40,0
40	52	40 ±0,3	14,0	31,0	M6	17,0	M8	13	5,5	7,0	9,0	16	14	8,0	11,0	G1/8	11,0	11,0	7 ±2	29,5	39,5	36,5	46,5
50	64	50 ±0,5	26,0	39,0	M8	22,0	M10	15	6,6	8,0	11,0	20	17	10,5	10,5	G1/4	15,0	15,0	8 ±2	30,5	40,5	38,5	48,5
63	77	60 ±0,5	19,0	44,5	M10	28,5	M10	15	9,0	10,5	14,0	20	17	10,5	15,0	G1/4	18,0	18,0	8 ±2	36,0	46,0	44,0	54,0
80	98	77 ±0,5	26,0	55,0	M12	35,5	M16	21	11,0	13,5	17,5	25	22	12,5	16,0	G3/8	22,0	22,0	10 ±2	43,5	53,5	53,5	63,5
100	117	94 ±0,5	26,0	65,0	M12	35,5	M20	27	11,0	13,5	17,5	30	27	13,0	23,0	G3/8	22,0	22,0	12 ±2,5	53,0	63,0	65,0	75,0

Dimensions - Magnetic

WH and ZB are without pressure in the cylinder, deformation of elastic bumpers under pressure gives different dimensions

Bore size Ø (mm)	E	TG	F	OH	RT 6H	BG	KF	AF	ØRR	LB	ØDT	ØMM f8	SW	PL1	PL2	EE	X1	X2	WH	ZA	ZB
12	25	15,5 ±0,3	-	12,5	M4	11,0	M3	6	3,5	4,0	6,5	6	5	5,0	7,5	M5	0	0	3,5 ±1,5	22,0	25,5
16	29	20 ±0,3	-	14,5	M4	11,0	M4	8	3,5	4,0	6,5	8	6	5,0	7,5	M5	3,5	3,5	3,5 ±1,5	22,0	25,5
20	36	25,5 ±0,3	7,6	18,0	M6	17.0	M5	7	5,4	7,0	9,0	10	8	5,5	9,0	M5	5,5	5,5	4,5 ±1,5	29,5	34,0
25	40	28 ±0,3	16,4	20,0	M6	17,0	M6	12	5,4	7,0	9,0	12	10	5,5	11,0	M5	6,5	6,5	5 ±1,5	32,5	37,5
32	45	34 ±0,3	14,0	27,0	M6	17,0	M8	13	5,5	7,0	9,0	16	14	7,5	10,5	G1/8	10,0	10,0	7 ±2	33,0	40,0
40	52	40 ±0,3	14,0	31,0	M6	17,0	M8	13	5,5	7,0	9,0	16	14	8,0	11,0	G1/8	11,0	11,0	7 ±2	39,5	46,5
50	64	50 ±0,5	26,0	39,0	M8	22,0	M10	15	6,6	8,0	11,0	20	17	10,5	10,5	G1/4	15,0	15,0	8 ±2	40,5	48,5
63	77	60 ±0,5	19,0	44,5	M10	28,5	M10	15	9,0	10,5	14,0	20	17	10,5	15,0	G1/4	18,0	18,0	8 ±2	46,0	54,0
80	98	77 ±0,5	26,0	55,0	M12	35,5	M16	21	11,0	13,5	17,5	25	22	12,5	16,0	G3/8	22,0	22,0	10 ±2	53,5	63,5
100	117	94 ±0,5	26,0	65,0	M12	35,5	M20	27	11,0	13,5	17,5	30	27	13,0	23,0	G3/8	22,0	22,0	12 ±2,5	63,0	75,0

S = stroke, following ISO tolerance on ZB is ±2, bore sizes 12 and 16 mm are not in the ISO standard

Tel: +45 63 12 83 00 | Email: ps@hymatik.com | www.hymatik.com | Hvidkaervej 27a, DK-5250 Odense SV, Denmark

Cylinder mountings

Flange MF1
Surface treated steel



Cyl. dia.	Order code
12	**P1Q-4DMB**
16	**P1Q-4FMB**
20	**P1Q-4HMB**
25	**P1Q-4JMB**
32	**P1Q-4KMB**
40	**P1Q-4LMB**
50	**P1Q-4MMB**
63	**P1Q-4NMB**
80	**P1Q-4PMB**
100	**P1Q-4QMB**

Foot brackets MS9
Surface treated steel



Cyl. dia.	Order code
12	**P1Q-4DMF**
16	**P1Q-4FMF**
20	**P1Q-4HMF**
25	**P1Q-4JMF**
32	**P1Q-4KMF**
40	**P1Q-4LMF**
50	**P1Q-4MMF**
63	**P1Q-4NMF**
80	**P1Q-4PMF**
100	**P1Q-4QMF**

Clevis mounting
Surface treated steel, black



Cyl. dia.	Order code
12	**P1Q-4DMT**
16	**P1Q-4FMT**
20	**P1Q-4HMT**
25	**P1Q-4JMT**
32	**P1Q-4KMT**
40	**P1Q-4LMT**
50	**P1Q-4MMT**
63	**P1Q-4NMT**
80	**P1Q-4PMT**
100	**P1Q-4QMT**

Electronic and Reed Sensors

Size	Description	**Order code**
Flush mount style		
PNP Type, normally open	0.165 m cable and M8 screw male connector	**P8S-EPSUS**
PNP Type, normally open	2 m PUR cable without connector	**P8S-EPFSX**
NPN Type, normally open	0.165 m cable and M8 screw male connector	**P8S-ENSUS**
NPN Type, normally open	2 m PUR cable without connector	**P8S-ENFXS**
Reed Type, normally open	0.15 m cable and M8 screw male connector	**P8S-ERSUS**
Reed Type, normally open	2 m PUR cable without connector	**P8S-ERFXS**

Tel: +45 63 12 83 00 | Email: ps@hymatik.com | www.hymatik.com | Hvidkaervej 27a, DK-5250 Odense SV, Denmark

Single acting, spring return cylinders ideal for applications where space is at a premium. The threaded body makes installation simple.



- Non - lube operation
- Corrosion resistant design
- Integral mounting
- Compact construction
- Single acting as standard

Operating information

Working pressure	2 - 7 bar
working temperature	-20 °C to +80 °C

Supplied complete with 1 rod nut and 2 fixing nuts

For more information see www.parker.com/euro_pneumatic

Single acting push type

Symbol	Cyl. bore mm	Rod thread mm	Body thread mm	Spring force Max N	Min N	Port size	Stroke mm	Order code
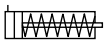	6	M3	M10x1,0	3,8	1,2	M5	5	**P1G-S006SS-0005**
							10	**P1G-S006SS-0010**
							15	**P1G-S006SS-0015**
	10	M4	M15x1,5	7,3	2,7	M5	5	**P1G-S010SS-0005**
							10	**P1G-S010SS-0010**
							15	**P1G-S010SS-0015**
	16	M5	M22x1,5	6,6	3,3	M5	5	**P1G-S016SS-0005**
							10	**P1G-S016SS-0010**
							15	**P1G-S016SS-0015**

The spring forces in single acting cylinders are sufficient to return the piston without load.

Dimensions (mm)

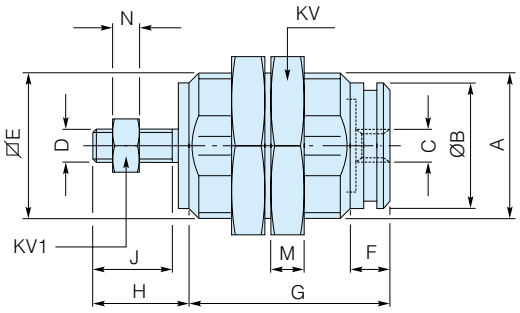

Caution
Avoid side loads on the piston rod
Avoid loading the piston rod during retraction
Do not operate the cylinders with excessive inertia.

Cylinder bore	A	ØB	C	D	E	F	G			H	J	KV	KV1	M	N
							5[1]	10[1]	15[1]						
	mm	mm	mm	mm mm	mm	mm	mm	mm	mm	mm	mm	mm	mm	mm	mm
6	M10x1	8,5	M5	M3x0,5	9	5	19,5	26,5	33,5	8	8	14	5,5	3	2,4
10	M15x1,5	12	M5	M4x0,7	14	7	23	29.5	36.5	10,5	10.5	19	7	4	3,2
16	M22x1,5	19	M5	M5x0,8	20	6	27	32	37	13	12	27	8	5	4

1) Stroke length in mm

Tel: +45 63 12 83 00 | Email: ps@hymatik.com | www.hymatik.com | Hvidkaervej 27a, DK-5250 Odense SV, Denmark

Compact short stroke cylinders available in single as well as double acting versions. Ideally suited for clamping and locking operations. The compact design with mounting holes through the cylinder body makes the unit easy to install in confined spaces. The main body is machined from one piece thus providing an easy to clean unit. Fitted with stainless steel piston rod as standard for corrosion resistance.



- Short stroke cylinders providing high clamping forces
- Compact dimensions for confined spaces
- Single and double acting versions
- Simple installation and mounting

Operating information

Working pressure: Max 10 bar
Working temperature: -20°C to +70°C

Prelubricated, further lubrication is not normally necessary.
If additional lubrication is introduced it must be continued.

For more information see www.parker.com/euro_pneumatic

C05 Double acting cylinders

Cyl. bore mm	Stroke mm	Port	**Order code**
12	10	M5	**C05-12-5-10**
20	10	M5	**C05-20-10-10**
32	10	G1/8	**C05-32-12-10**
32	25	G1/8	**C05-32-12-25**
50	25	G1/4	**C05-50-16-25**
63	25	G1/4	**C05-63-16-25**

C05S Single acting cylinders

Cyl. bore mm	Stroke mm	Port	**Order code**
8	4	M5	**C05S-8-4-4**
12	4	M5	**C05S-12-5-4**
20	4	G1/8	**C05S-20-10-4**
32	5	G1/8	**C05S-32-12-5**
50	10	G1/4	**C05S-50-16-10**
63	10	G1/4	**C05S-63-16-10**

The spring forces in single acting cylinders are sufficient to return the piston without load.

Double acting dimensions (mm)

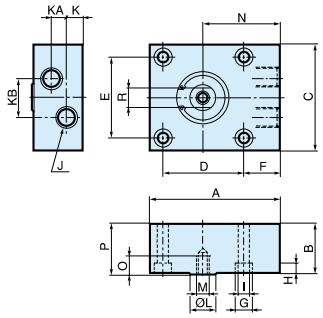

Type	A	B	C	D	E	F	G	H	I	J
C05-12-5-10	25	27	20	0*	13	7,0	6	3,4	3,4	M5
C05-20-10-10	40	30	32	0*	20	9,0	10	5,0	5,5	M5
C05-32-12-10	55	36	45	0*	32	14,0	10	5,0	5,5	G1/8
C05-32-12-25	55	51	45	0*	32	14,0	10	5,0	5,5	G1/8
C05-50-16-25	80	50	65	50	50	22,5	11	6,5	6,5	G1/4
C05-63-16-25	90	55	80	62	62	19,0	15	9,0	9,0	G1/4

Type	K	KA	KB	L	M	N	O	P	R
C05-12-5-10	6,0	13,0	3	5	-	16,0	-	28	-
C05-20-10-10	6,0	16,0	6	10	M5	24,0	8	31	-
C05-32-12-10	9,5	16,5	14	12	M6	32,0	12	37	9
C05-32-12-25	9,5	31,5	0**	12	M6	32,0	12	52	9
C05-50-16-25	11,0	28,0	0**	16	M8	47,5	12	51	14
C05-63-16-25	11,0	33,0	0**	16	M8	50,0	14	56	14

* Only two mounting holes (F).
** Connections in-line.

Single acting dimensions (mm)

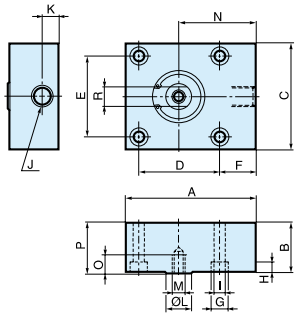

Type	A	B	C	D	E	F	G	H	I	J
C05S-8-4-4	20	16	18	0*	11	5,5	6	3,4	3,4	M5
C05S-12-5-4	25	16	20	0*	13	7,0	6	3,4	3,4	M5
C05S-20-10-4	40	20	32	0*	20	9,0	10	5,0	5,5	G1/8
C05S-32-12-5	55	26	45	0*	32	14,0	10	5,0	5,5	G1/8
C05S-50-16-10	80	30	65	50	50	22,5	11	6,5	6,5	G1/4
C05S-63-16-10	90	35	80	62	62	19,0	15	9,0	9,0	G1/4

Type	K	KA	KB	L	M	N	O	P	R
C05S-8-4-4	5,0	-	-	4	-	13,5	-	17	-
C05S-12-5-4	6,0	-	-	5	-	15,0	-	17	-
C05S-20-10-4	9,5	-	-	10	M5	24,0	8	21	-
C05S-32-12-5	9,5	-	-	12	M6	32,0	12	27	9
C05S-50-16-10	11,0	-	-	16	M8	47,5	12	31	14
C05S-63-16-10	11,0	-	-	16	M8	50,0	14	36	14

Tel: +45 63 12 83 00 | Email: ps@hymatik.com | www.hymatik.com | Hvidkaervej 27a, DK-5250 Odense SV, Denmark



ORIGA SYSTEM PLUS OSP-P

The "ORIGINAL" rodless pneumatic cylinders

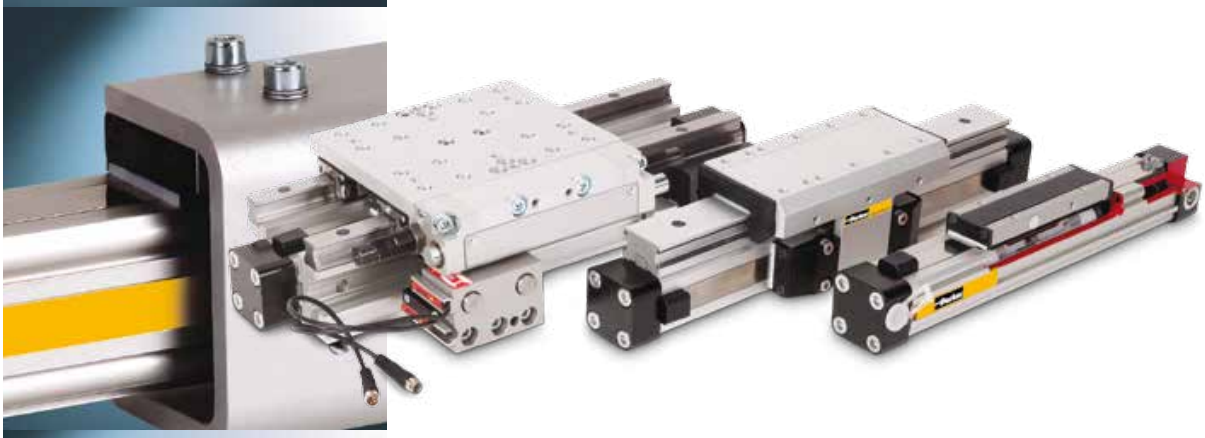





A NEW Modular Linear Drive System

With this second generation linear drive Parker Origa offers design engineers complete flexibility. The well known ORIGA cylinder has been further developed into a combined linear actuator, guidance and control package. It forms the basis for the new, versatile ORIGA SYSTEM PLUS linear drive system.

All additional functions are designed into modular system components which replace the previous series of cylinders.

- Completely modular design
- Compact design
- Widest capability for speed, load and movement profiles
- End caps can be rotated 4 x 90°
- High loads and moments
- High service life up to 8,000km
- Low friction forces ≥ high action forces
- Wide speed range (0.005 – 30m/s)
- Modular System – easy to mount guides, brakes and displacement measuring system

Tel: +45 63 12 83 00 | Email: ps@hymatik.com | www.hymatik.com | Hvidkaervej 27a, DK-5250 Odense SV, Denmark

Parker Origa rodless pneumatic cylinders are the first rodless cylinders that have been approved for use in potentially explosive atmospheres in Equipment Group II, Category 2 GD.

The Cylinders are to the ATEX Certification 94/9/EG (ATEX 95) for Pneumatic Components.



For full details and information on OSP-P range of rodless cylinders please see catalogue no.: P-A4P011GB

Special Versions

for use in Ex-Areas

for Clean Room Applications certified to DIN EN ISO 14644-1

Stainless steel version for special applications

with special pneumatic cushioning system for cycle time optimization, for Ø 16 to 50 mm – on request

High Temperature Version for temperatures up to +120°C

Low Temperature Version for temperatures down to -40°C

Slow Speed Version v = 0.005 – 0.2 m/s

High Speed Version $v_{max.}$ = 30 m/s

Cylinders with extreme long strokes
Stroke length up to 41 m

*** Information on electrical linear drives series OSP-E, please refer to catalogue P-A4P017GB**

Basic Linear Drive Standard Version • Series OSP-P • Series OSP-E* Belt drive Belt drive with integrated Guides Vertical belt drive with recirculating ball bearing guide • Series OSP-E* Screw drive (Ball Screw, Trapezoidal Screw)	
Air Connection on the End-face or both at One End • Series OSP-P	
Long-Stroke Cylinders for strokes up to 41 m • Series OSP-P	
Clean Room Cylinder certified to DIN EN ISO 14644-1 • Series OSP-P • Series OSP-E..SB	
Products for ATEX Areas • Series OSP-P Rodless Cylinders	
Products for ATEX Areas • Series OSP-P Rodless Cylinders with Linear Guide BASIC GUIDE	
Products for ATEX Areas • Series OSP-P Rodless Cylinders with Linear Guide SLIDELINE	
Bi-parting Version • Series OSP-P	
Integrated 3/2 Way Valves • Series OSP-P	
Clevis Mounting • Series OSP-P • Series OSP-E Belt drive* • Series OSP-E Screw drive*	
End Cap Mounting • Series OSP-P • Series OSP-E Belt drive* • Series OSP-E Screw drive*	
Mid-Section Support • Series OSP-P • Series OSP-E Belt drive* • Series OSP-E Screw drive*	
Inversion Mounting • Series OSP-P • Series OSP-E Belt drive* • Series OSP-E Screw drive*	

BASIC GUIDE • Series OSPP-BG	
Duplex Connection • Series OSP-P	
Multiplex Connection • Series OSP-P	
Linear Guides – SLIDELINE • Series OSP-P • Series OSP-E Screw drive*	
Linear Guides – POWERSLIDE • Series OSP-P • Series OSP-E Belt drive* • Series OSP-E Screw drive*	
Linear Guides – PROLINE • Series OSP-P • Series OSP-E Belt drive* • Series OSP-E Screw drive*	
Linear Guides – STARLINE • Series OSP-P	
Linear Guides – KF • Series OSP-P	
Heavy Duty Linear Guides – HD • Series OSP-P • Series OSP-E Screw drive*	
Intermediate stop module – ZSM • Series OSP-P	
Brakes • Active Brakes • Passive Brakes	 
Magnetic Switches • Series OSP-P • Series OSP-E Belt drive* • Series OSP-E Screw drive* • ATEX-Versions	
SENSOFLEX-Measuring system • Series SFI-plus	
Variable Stop VS • Series OSP-P with Linear Guide STL, KF, HD	

Tel: +45 63 12 83 00 | Email: ps@hymatik.com | www.hymatik.com | Hvidkaervej 27a, DK-5250 Odense SV, Denmark

Origa System Plus
- Innovation from a proven design

A completely new generation of linear drives which can be simply and neatly integrated into any machine layout.

A NEW MODULAR LINEAR DRIVE SYSTEM

With this second generation linear drive Parker Origa offers design engineers complete flexibility.
The well known ORIGA cylinder has been further developed into a combined linear actuator, guidance and control package. It forms the basis for the new, versatile ORIGA SYSTEM PLUS linear drive system.

All additional functions are designed in-to modular system components which replace the previous series of cylinders.

MOUNTING RAILS ON 3 SIDES

Mounting rails on 3 sides of the cylinder enable modular components such as linear guides, brakes, valves, magnetic switches etc. to be fitted to the cylinder itself. This solves many installation problems, especially where space is limited.

The modular system concept forms an ideal basis for additional customer-specific functions.

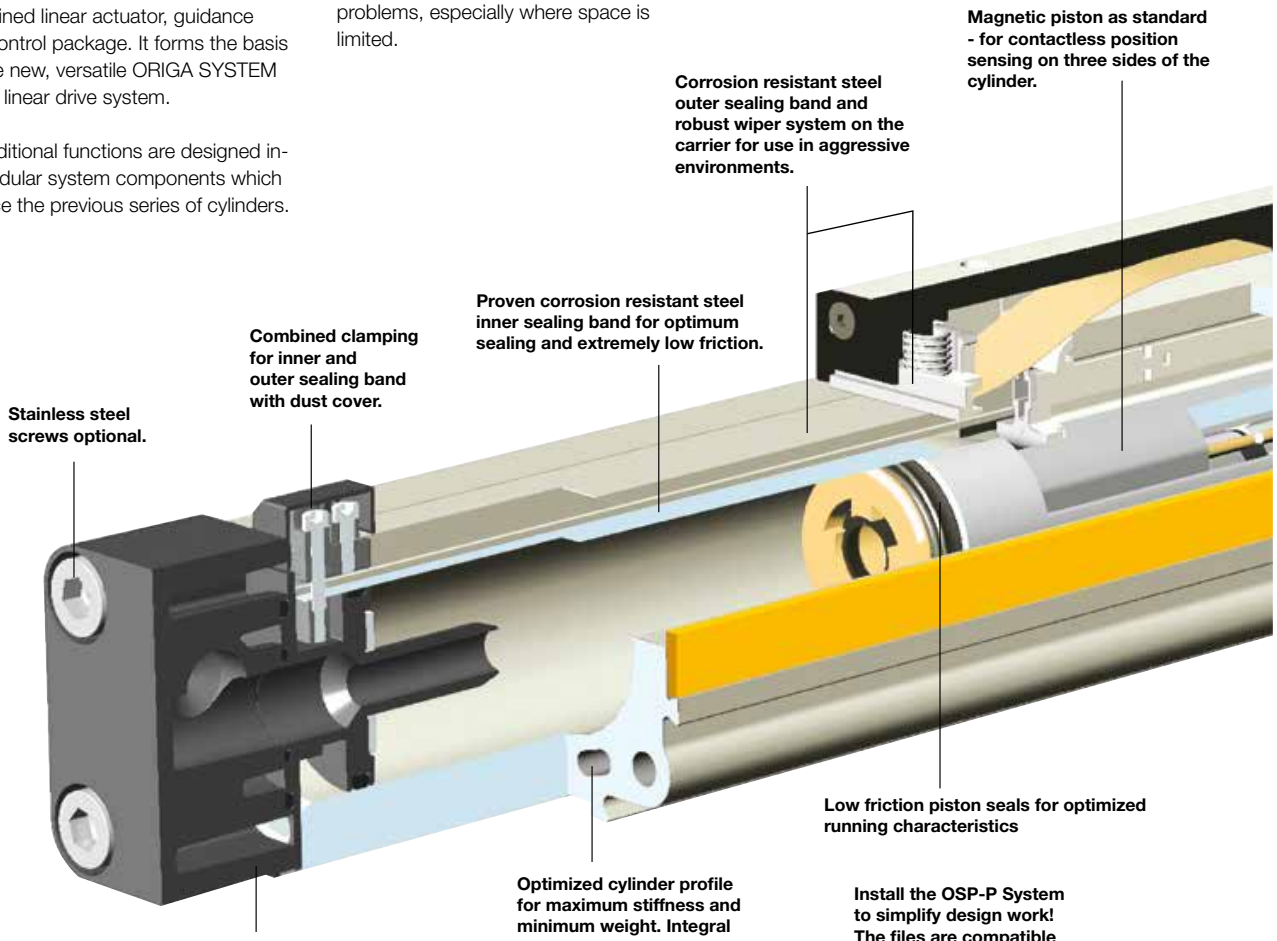

Tel: +45 63 12 83 00 | Email: ps@hymatik.com | www.hymatik.com | Hvidkaervej 27a, DK-5250 Odense SV, Denmark

Clean Room Version
certified to DIN EN ISO 14644-1





Rodless Cylinder
for synchronized bi-parting movements

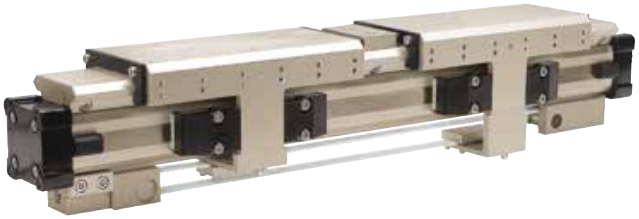

New low profile
piston/carrier design.

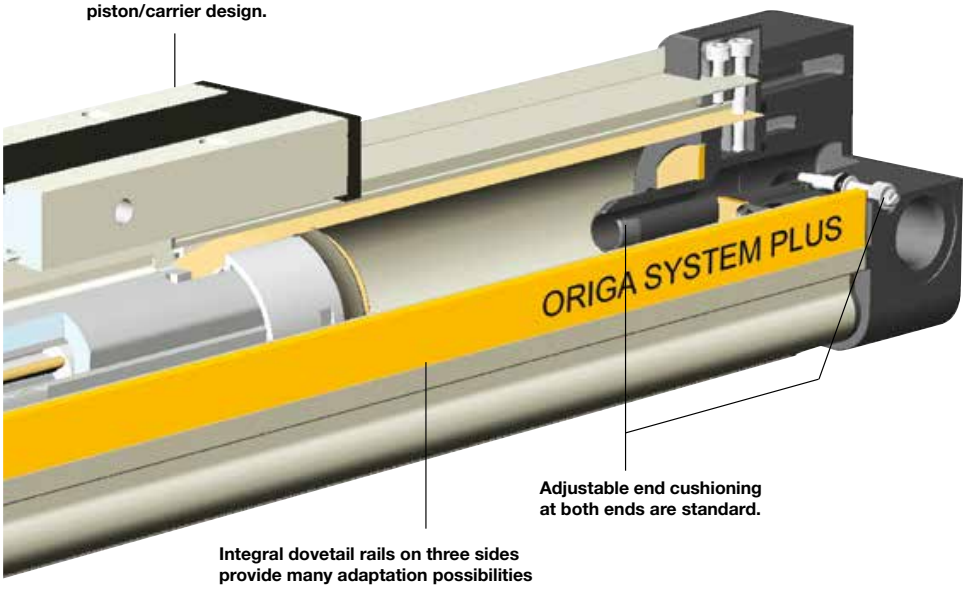

Adjustable end cushioning at both ends are standard.

Integral dovetail rails on three sides provide many adaptation possibilities (linear guides, magnetic switches, etc.).

Modular system components are simply clamped on.

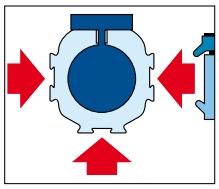

INTEGRATED VOE VALVES
The complete compact solution for optimal cylinder control.



SENSOFLEX
SFI-plus incremental measuring system with 0.1 (1.0) mm resolution.



BASIC GUIDE
Compact, robust plain bearing guide for medium loads.



SLIDELINE
Guide system for moderate loads. Optional with Active- / Passive-Brake.



POWERSLIDE
Roller guide for high loads and rough conditions.

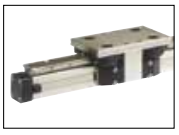

PROLINE
The compact aluminium roller guide for high loads and velocities. Optional with Active- / Passive-Brake.



STARLINE
Recirculating ball bearing guide for very high loads and precision.



KF GUIDE
Recirculating ball bearing guide – the mounting dimensions correspond to FESTO Type: DGPL-KF



HEAVY DUTY GUIDE HD
for heavy duty applications.

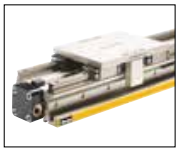

VARIABLE STOP VS
The variable stop provides simple stroke limitation.



PASSIVE BRAKE
reacts automatically to pressure failure.



ACTIVE BRAKE
pneumatic brake for secure, positive stopping at any position.



Tel: +45 63 12 83 00 | Email: ps@hymatik.com | www.hymatik.com | Hvidkaervej 27a, DK-5250 Odense SV, Denmark

Options and Accessories for system versatility

Series OSP-P

STANDARD VERSIONS OSP-P10 to P80

Standard carrier with integral guidance. End cap can be rotated 4 x 90° to position air connection on any side.
Magnetic piston as standard.
Dovetail profile for mounting of accessories and the cylinder itself.



LONG-STROKE VERSION

For extremely long strokes up to max. 41m



BASIC CYLINDER OPTIONS

CLEAN ROOM CYLINDERS

For use in clean room applications, certified with the IPA-Certificate (to DIN EN ISO 14644-1).
The special design of the linear drive enables all emissions to be led away.



ATEX-Version

For use in Ex-Areas



STAINLESS VERSION

For use in constantly damp or wet environments. All screws are A2 quality stainless steel (material no.1.4301 / 1.4303)



SLOW SPEED OPTIONS

Specially formulated grease lubrication facilitates slow, smooth and uniform piston travel in the speed range from 0.005 to 0.2 m/s.
Minimum achievable speeds are dependent on several factors. Please consult our technical department.
Slow speed lubrication in combination with Viton® on demand.
Oil free operation preferred.



VITON® VERSION

For use in an environment with high temperatures or in chemically aggressive areas.
All seals are made of Viton®.
Corrosion resistant steel sealing bands.



END-FACE AIR CONNECTION

To solve special installation problems.



BOTH AIR CONNECTIONS AT ONE END

For simplified tubing connections and space saving.



INTEGRATED VOE VALVES

The complete compact solution for optimal cylinder control.



DUPLEX CONNECTION

The duplex connection combines two OSP-P cylinders of the same size into a compact unit with high performance.



MULTIPLEX CONNECTION

The multiplex connection combines two or more OSP-P cylinders of the same size into one unit.
The orientation of the carriers can be freely selected.



Tel: +45 63 12 83 00 | Email: ps@hymatik.com | www.hymatik.com | Hvidkaervej 27a, DK-5250 Odense SV, Denmark

ACCESSORIES

MAGNETIC SWITCHES TYPE RS, ES, RST, EST

For electrical sensing of end and intermediate piston positions, also in EX-Areas.



MOUNTING FOR OSP-P10 UP TO P80

CLEVIS MOUNTING

Carrier with tolerance and parallelism compensation for driving loads supported by external linear guides.



MID-SECTION SUPPORT

For supporting long cylinders or mounting the cylinder by its dovetail rails.



END CAP MOUNTING

For end-mounting of the cylinder.



INVERSION MOUNTING

The inversion mounting transfers the driving force to the opposite side, e.g. for dirty environments.



Tel: +45 63 12 83 00 | Email: ps@hymatik.com | www.hymatik.com | Hvidkaervej 27a, DK-5250 Odense SV, Denmark

OSP-P Application examples

ORIGA SYSTEM PLUS – rodless linear drives offer maximum flexibility for any application.

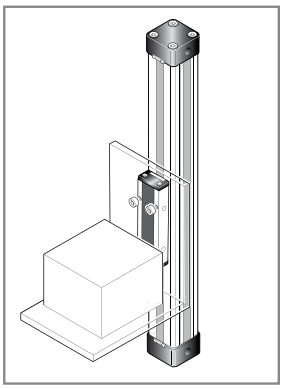

The high load capacity of the piston can cope with high bending moments without additional guides.

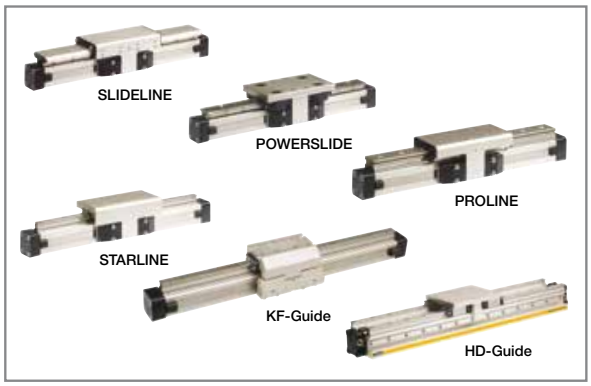

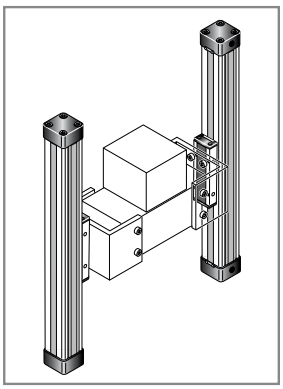

The mechanical design of the OSP-P allows synchronised movement of two cylinders.

Integrated guides offer optimal guidance for applications requiring high performance, easy assembly and maintenance free operation.

Optimal system performance by combining multi-axis cylinder combinations.

When using external guides, the clevis mounting is used to compensate for deviations in parallelism.

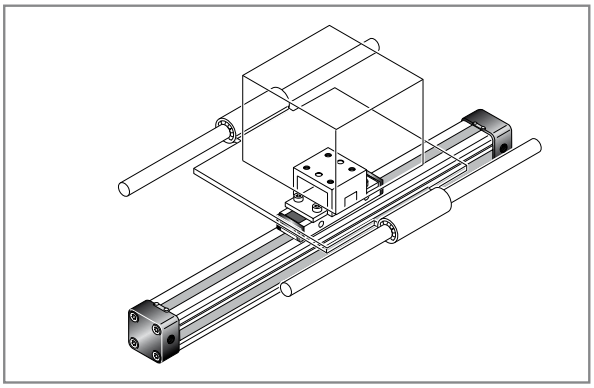

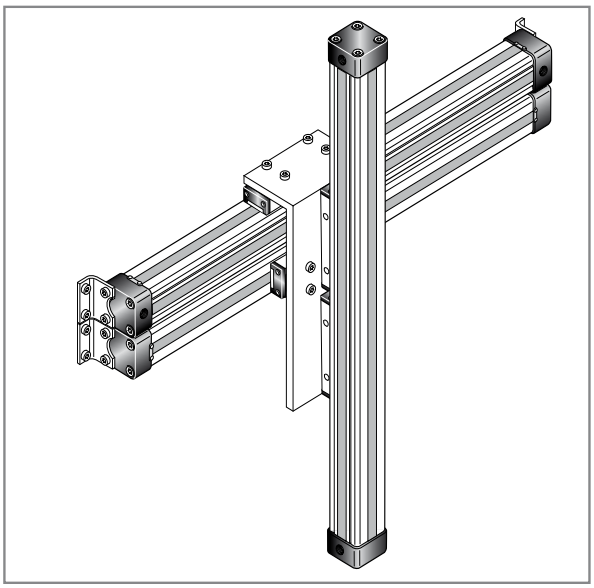

For further information and assembly instructions, please contact your local Parker Origa dealer.

Rodless Pneumatic Cylinder Ø 10-80 mm

OSP ORIGA SYSTEM PLUS

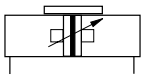



Standard Versions:

- Double-acting with adjustable end cushioning
- With magnetic piston for position sensing

Long-Stroke Cylinders for stroke lenghts up to 41 m
See page 133

Special Versions:

- Cushioning system for cycle time optimization (on request)
- Clean room cylinders
- ATEX-Version
- Stainless steel screws
- Slow speed lubrication
- Viton® seals
- Both air connections on one end
- Air connection on the end-face
- Integrated Valves

- End cap can be rotated 4 x 90° to position air connection as desired
- Free choice of stroke length up to 6000 mm, Long-Stroke version (Ø50-80mm) for stroke lengths up to 41 m

Size Comparison

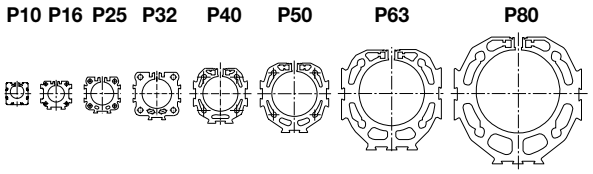

Characteristics	Description
General Features	
Type	Rodless cylinder
Series	OSP-P
System	Double-acting, with cushioning, position sensing capability
Mounting	See drawings
Air Connection	Threaded
Ambient T_{min}	-10 °C Other temperature ranges
temperature range T_{max}	+80 °C on request
Installation	In any position
Medium	Filtered, unlubricated compressed air (other media on request)
Lubrication	Permanent grease lubrication (additional oil mist lubrication not required)
	Option: special slow speed grease
Material	
Cylinder Profile	Anodized aluminium
Carrier (piston)	Anodized aluminium
End caps	Aluminium, lacquered / Plastic (P10)
Sealing bands	Corrosion resistant steel
Seals	NBR (Option: Viton®)
Screws	Galvanized steel
	Option: stainless steel
Dust covers, wipers	Plastic
Max. operating pressure p_{max}	8 bar

Tel: +45 63 12 83 00 | Email: ps@hymatik.com | www.hymatik.com | Hvidkaervej 27a, DK-5250 Odense SV, Denmark

Loads, Forces and Moments

Choice of cylinder is decided by:

- Permissible loads, forces and moments
- Performance of the pneumatic end cushions.

The main factors here are the mass to be cushioned and the piston speed at start of cushioning (unless external cushioning is used, e. g. hydraulic shock absorbers).

The adjacent table shows the maximum values for light, shock-free operation, which must not be exceeded even in dynamic operation. **Load and moment data are based on speeds v ≤ 0.5 m/s.**

When working out the action force required, it is essential to take into account the friction forces generated by the specific application or load.

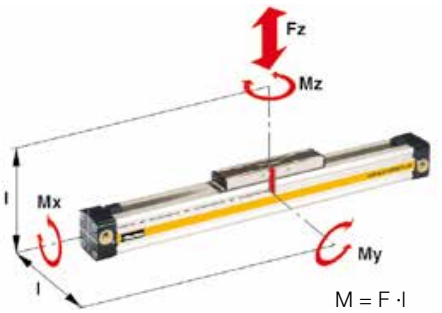

M = F ·l
Bending moments are calculated from the centre of the linear actuator

Cylinder-Series Ø [mm]	Theoretical Action Force at 6 bar [N]	effektive Action Force F_A at 6 bar [N]	max. Moments Mx [Nm]	My [Nm]	Mz [Nm]	max. Load F [N]	Cushion Length [mm]
OSP-P10	47	32	0.2	1	0.3	20	2.5 *
OSP-P16	120	78	0.45	4	0.5	120	11
OSP-P25	295	250	1.5	15	3	300	17
OSP-P32	483	420	3	30	5	450	20
OSP-P40	754	640	6	60	8	750	27
OSP-P50	1178	1000	10	115	15	1200	30
OSP-P63	1870	1550	12	200	24	1650	32
OSP-P80	3016	2600	24	360	48	2400	39

* A rubber element (non-adjustable) is used for end cushioning.
To deform the rubber element enough to reach the absolute end position would require a Δp of 4 bar!

Cushioning Diagram

Work out your expected moving mass and read off the maximum permissible speed at start of cushioning. Alternatively, take your desired speed and expected mass and find the cylinder size required.
Please note that piston speed at start of cushioning is typically ca. 50 % higher than the average speed, and that it is this higher speed which determines the choice of cylinder.



Weight (mass) [kg]

Cylinder series (Basic cylinder)	Weight (Mass) [kg] At 0 mm stroke	per 100 mm stroke
OSP-P10	0.087	0.052
OSP-P16	0.22	0.1
OSP-P25	0.65	0.197
OSP-P32	1.44	0.354
OSP-P40	1.95	0.415
OSP-P50	3.53	0.566
OSP-P63	6.41	0.925
OSP-P80	12.46	1.262

* For cylinders with linear guides or brakes, please be sure to take the mass of the carriage or the brake housing into account.

If the permitted limit values are exceeded, either additional shock absorbers should be fitted in the area of the centre of gravity or you can consult us about our special cushioning system – we shall be happy to advise you on your specific application.

Tel: +45 63 12 83 00 | Email: ps@hymatik.com | www.hymatik.com | Hvidkaervej 27a, DK-5250 Odense SV, Denmark

Integrated 3/2 Way Valves VOE

Series OSP-P25, P32, P40 and P50

OSP ORIGA SYSTEM PLUS



For optimal control of the OSP-P cylinder, 3/2 way valves integrated into the cylinder's end caps can be used as a compact and complete solution. They allow for easy positioning of the cylinder, smooth operation at the lowest speeds and fast response, making them ideally suited for the direct control of production and automation processes.

Features:

- Complete compact solution
- Various connection possibilities: Free choice of air connection with rotating end caps with VOE valves, Air connection can be rotated 4 x 90°
- Solenoid can be rotated 4 x 90°,
- Pilot valve can be rotated 180°
- High piston velocities can be achieved with max. 3 exhaust ports
- Minimal installation requirements
- Requires just one air connection per valve
- Optimal control of the OSP-P cylinder
- Excellent positioning characteristics
- Integrated operation indicator
- Integrated exhaust throttle valve
- Manual override - indexed
- Adjustable end cushioning
- Easily retrofitted – please note the increase in the overall length of the cylinder!

Characteristics 3/2 Way Valves VOE

Characteristics	3/2 Way Valves with spring return			
Pneumatic diagram	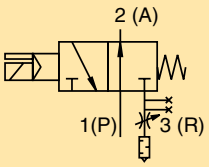		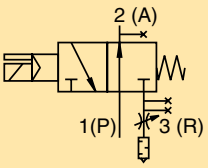	
Type	VOE-25	VOE-32	VOE-40	VOE-50
Actuation	electrical			
Basic position	P → A open, R closed			
Type	Poppet valve, non overlapping			
Mounting	integrated in end cap			
Installation	in any position			
Port size	G 1/8	G 1/4	G 3/8	G 3/8
Temperature	-10°C to +50°C *			
Operating pressure	2-8 bar			
Nominal voltage	24 V DC / 230 V AC, 50 Hz			
Power consumption	2.5 W / 6 VA			
Duty cycle	100%			
Electrical Protection	IP 65 DIN 40050			

* other temperature ranges on request

For further technical information see catalogue P-A4P011GB

Parker Hannifin Corporation
Origa Division - Europe

Tel: +45 63 12 83 00 | Email: ps@hymatik.com | www.hymatik.com | Hvidkaervej 27a, DK-5250 Odense SV, Denmark

Order Instructions - Basic Cylinder

1-4	5+6	7	8	9	10	11	12-16	17	18	19	20	21	22	23	24	25
OSPP	25	0	0	0	0	0	01100	0	0	0	0	0	0	0	0	0

Piston-Ø

10
16
25
32
40
50
63
80

Version / Piston

0	standard
1	Tandem

Air Connection

0	standard
1	end face
2	both at one end
3	left stand. right end face
4	right stand. left end face
A	3/2 Way valve VOE 24 V = Ø 25,32,40,50
B	3/2 Way valve VOE 230 V~ / 110 V= Ø 25,32,40,50
C	3/2 Way valve VOE 48 V = Ø 25,32,40,50
E	3/2 Way valve VOE 110 V~ Ø 25,32,40,50

Seals

0	standard (NBR)
1	Viton® [1]

Lubrication

0	standard
1	slow speed [2] [3]

Screws

0	standard
1	Stainless

Stroke Length

In mm (5 digits)

Cushioning

0	standard
1	max. length [3]

End cap position

0	l+r 0° = in front
1	l+r 90° = underneath
2	l+r 180° = at the back
3	l+r 270° = same side as outerband
4	l 90° = underneath; r 0° = in front
5	l 180° = at the back; r 0° = in front
6	l 270° = same side as outerband; r 0° = in front
7	l 0° = in front; r 90° = underneath
8	l 180° = at the back; r 90° = underneath
9	l 270° = same side as outerband; r 90° = underneath
A	l 0° = in front; r 180° = at the back
B	l 90° = underneath; r 180° = at the back
C	l 270° = same side as outerband; r 180° = at the back
D	l 0° = in front; r 270° = same side as outerband
E	l 90° = underneath; r 270° = same side as outerband
F	l 180° = at the back; r 270° = same side as outerband

Piston Mounting

0	without
1	clevis mounting

Guides/ Brakes/ Inversion

0	without
A	Activebrake AB Ø 25-80
M	Inversion Ø 16-80
N	Duplex Ø 25,32,40,50

add. Guide Carriage

0	without

Cover / Cable Channel

0	standard
1	Cable channel
2	Cable channel two-sided
X	without cover rail

Measuring system

0	without
X	SFI 0.1 mm
Y	SFI 1 mm

End cap position (air connection)

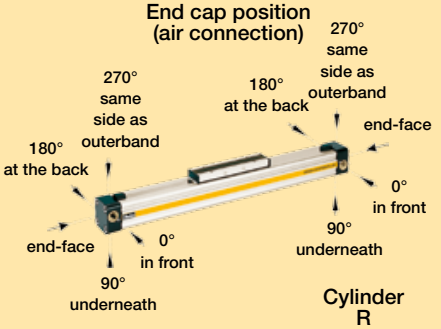

Cylinder R (right end side)

Cylinder L (left end side)

[1] Viton with VOE not available.
[2] Slow speed lubrication in combination with Viton® seals on demand
[3] „Lubrication slow speed“ in combination with „max. cushioning length“ not possible.

Long Stroke Cylinder Ø 50-80 mm for strokes up to 41 m



Standard Versions:
- Double-acting with adjustable end cushioning
- With magnetic piston for position sensing

Special Versions:
- Stainless steel screws
- Slow speed lubrication
- Viton® seals

Options:
- Displacement measuring system SFI-plus
- Active brake AB..

Size Comparison

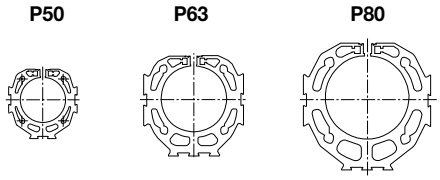

Weight (mass) [kg]

Cylinder series (Basic cylinder)	Weight (Mass) [kg] At 0 mm stroke	per 100 mm stroke
OSP-P50LS	3.53	0.566
OSP-P63LS	6.41	0.925
OSP-P80LS	12.46	1.262

Characteristics	Description
General Features	
Type	Rodless cylinder
Series	OSP-P
System	Double-acting, with cushioning, position sensing capability
Mounting	See drawings
Air Connection	Threaded
Ambient temperature range T_{min} T_{max}	10 °C Other temperature ranges +40 °C on request
Installation	Vertical, horizontal (piston at top or at bottom)
Medium	Filtered, unlubricated compressed air (other media on request)
Lubrication	Permanent grease lubrication (additional oil mist lubrication not required) Option: special slow speed grease
Material	
Cylinder Profile	Anodized aluminium
Carrier (piston)	Anodized aluminium
End caps	Anodized aluminium
Sealing bands	Corrosion resistant steel
Seals	NBR (Option: Viton®)
Screws	Galvanized steel Option: stainless steel
Dust covers, wipers	Plastic
Max. operating pressure p_{max}	8 bar
Max. speed v	2 m/s

For further technical information see catalogue P-A4P011GB

Parker Hannifin Corporation
Origa Division - Europe

Tel: +45 63 12 83 00 | Email: ps@hymatik.com | www.hymatik.com | Hvidkaervej 27a, DK-5250 Odense SV, Denmark

Clean Room Cylinder Ø 16-32 mm Certified to DIN EN ISO 14644-1

OSP ORIGA SYSTEM PLUS

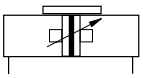



Standard Versions:

- Double-acting with adjustable end cushioning
- With magnetic piston for position sensing
- Stainless steel screws

Special Versions:

- Slow speed lubrication
- Viton® seals

Features:

- Clean room classification
  ISO Class 4 at v_m = 0.14 m/s
  ISO Class 5 at v_m = 0.5 m/s
- Suitable for smooth slow speed operation down to v_{min} = 0.005 m/s
- Optional stroke length up to 1200 mm (longer strokes on request)
- Low maintenance
- Compact design with equal force and velocity in both directions
- Aluminium piston with bearing rings to support high direct and cantilever loads

Size Comparison

P16 P25 P32



Weight (mass) [kg]

Cylinder series (Basic cylinder)	Weight (Mass) [kg] At 0 mm stroke	per 100 mm stroke
OSP-P16	0.22	0.1
OSP-P25	0.65	0.197
OSP-P32	1.44	0.354

For further technical information see catalogue P-A4P011GB

Characteristics	Description
General Features	
Type	Rodless cylinder
Series	OSP-P
System	Double-acting, with cushioning, position sensing capability
Mounting	See drawings
Air Connection	Threaded
Ambient T_{min}	-10 °C Other temperature ranges
temperature range T_{max}	+80 °C on request
Installation	In any position
Medium	Filtered, unlubricated compressed air (other media on request)
Lubrication	Permanent grease lubrication (additional oil mist lubrication not required) Option: special slow speed grease
Material	
Cylinder Profile	Anodized aluminium
Carrier (piston)	Anodized aluminium
End caps	Aluminium, lacquered
Sealing bands	Corrosion resistant steel
Seals	NBR (Option: Viton®)
Screws	Stainless steel
Covers	Anodised aluminium
Guide plate	Plastic
Max. operating pressure p_{max}	8 bar

Tel: +45 63 12 83 00 | Email: ps@hymatik.com | www.hymatik.com | Hvidkaervej 27a, DK-5250 Odense SV, Denmark

Order Instructions - Clean Room Cylinder

1-4	5+6	7	8	9	10	11	12-16	17	18	19	20	21	22	23	24	25
OSPP	25	4	7	0	0	1	01100	0	0	0	0	0	0	0	0	0

Piston-Ø
- 16
- 25
- 32

Stroke Length
in mm (5 digits) [2]

Piston Mounting
- 0 without

add. Guide Carriage
- 0 without

Measuring system
- 0 without

Screws
- 1 Stainless

Cushioning
- 0 Standard

Version / Piston
- 4 Clean room

Lubrication
- 0 Standard
- 1 Slow speed [1]

End cap position
- 0 L+R 0° = in front

Guides/ Brakes/ Inversion
- 0 without

Cover / Cable Channel
- 0 Standard
- 1 Cable channel
- 2 Cable channel two-sided
- X without Cover rail

Air Connection
- 7 End cap Clean room

Seals
- 0 Standard (NBR)
- 1 Viton®

[1] The combination „Slow speed lubrication“ and „Viton® sealings“ are available on request.
[2] max. stroke lengths 1200 mm, longer strokes on request.

Tel: +45 63 12 83 00 | Email: ps@hymatik.com | www.hymatik.com | Hvidkaervej 27a, DK-5250 Odense SV, Denmark

Components for EX-Areas

Information for ATEX-Directives

The rodless pneumatic cylinders of Parker Origa are the first linear drive unit, for that Ex range in the group of equipment II, Category 2 GD are certified.

Detail informations for use pneumatic components in Ex-Areas see leaflet PDE2584TCUK „EU Directive 94/9/EG (ATEX 95) for Pneumatic Components“.

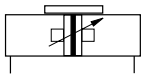

Rodless Cylinder Ø 10-80 mm

Basic Cylinder - Series: OSP-P .. ATEX



BASIC GUIDE Ø 25-50 mm

Basic Guide - Series: BG .. ATEX

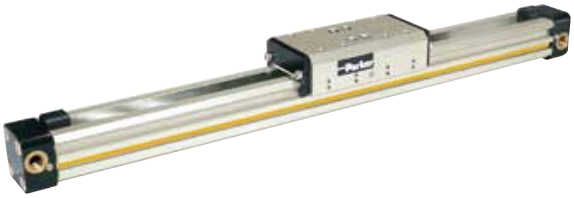

Plain Bearing Guide Ø 16-80 mm

SLIDELINE - Series: SL .. ATEX



Technical Data (deviant to the Standard Cylinder)

Characteristics	Description
General Features	
Ambient temperature range T_{min}	-10 °C
T_{max}	+60 °C
Max. switching frequency	1 (double stroke/s) Basic cylinder 0.5 (1stroke/s) Cylinder with guide
Operating pressure range p_{max}	Max. 8 bar
Max. speed v_{max}	3 (Basic cylinder) 2 (Cylinder with guide SLIDELINE and cylinder with guide BASIC GUIDE)
Medium	Filtered, unlubricated compressed air – free from water and dirt to ISO 8573-1
	Solids: Class 7 particle size < 40 µm for Gas
	Water content: pressure dew point +3 °C, class 4, but at least 5 °C below minimum operating temperature
Noise level	70 dB (A)
Information for materials	
Aluminium	See data sheet ”Material“
Lubrication	See security data sheet ”Grease for use in Cylinder with guides“
Sealing bands	Corrosion resistant steel

Equipment Group II Categorie 2GD

Rodless cylinder: Ex II 2GD c T4 T135°C -10°C≤Ta≤+60°C

Series	Size	Stroke range	Accessories
OSP-P	Ø 10 to 80	1– 6000 mm	Mountings programme
BASIC GUIDE	Ø 25 to 50	1– 6000 mm	Mountings programme
SLIDELINE	Ø 16 to 80	1– 5500 mm	Mountings programme

For further technical information see catalogue P-A4P011GB

Tel: +45 63 12 83 00 | Email: ps@hymatik.com | www.hymatik.com | Hvidkaervej 27a, DK-5250 Odense SV, Denmark

Synchronised Rodless Cylinder Ø 40 mm

For synchronised bi-parting movements

Type OSP-P40-SL-BP

OSP
ORIGA SYSTEM PLUS



Applications:

- Opening and closing operations
- Gripping of workpieces – outside
- Gripping of hollow workpieces – inside
- Gripping underneath larger objects
- Clamping force adjustable via pressure regulator

Features:

- Accurate bi-parting movement through toothed belt synchronization
- Optimum slow speed performance
- Increased action force
- Anodized aluminium guide rail with prism-form slideway arrangement
- Adjustable polymer slide units
- Combined sealing system with polymer and felt elements to remove dirt and lubricate the slideway
- Integrated grease nipples for guide lubrication

Applications:

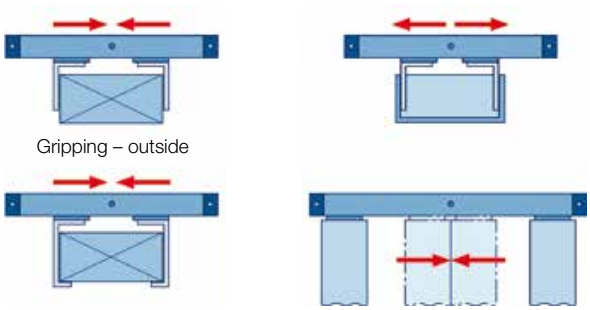

Gripping – outside

Gripping – underneath

Door opening and closing

Characteristics		Description
General Features		
Type		Rodless cylinder for synchronised bi-parting movements
Series		OSP-P
System		Double-acting with end cushioning for contactless position sensing
Guide		Slideline SL40
Synchronisation		Toothed belt
Mounting		See drawings
Ambient temperture range		-10 °C to +60 °C
Installation		In any position
Medium		Filtered, unlubricated compressed air (other media on request)
Lubrication		Special slow speed grease - additional oil mist lubrication not required
Operating pressure	p_{max}	6 bar
Cushioning middle position		Elastic buffer
Max. speed	v_{max}	0.2 m/s
Max. stroke of each stroke		500 mm
Max . mass per guide carrier		25 kg
Max . moments on guide carrier		
Lateral moment	Mx_{max}	25 Nm
Axial moment	My_{max}	46 Nm
Rotating moment	Mz_{max}	46 Nm
Material		
Toothed belt	Steel-corded polyurethane	
Belt wheel	Aluminium	

For further technical information see catalogue P-A4P011GB

Parker Hannifin Corporation
Origa Division - Europe

Tel: +45 63 12 83 00 | Email: ps@hymatik.com | www.hymatik.com | Hvidkaervej 27a, DK-5250 Odense SV, Denmark

OSP
ORIGA SYSTEM PLUS

Adaptive modular system

The Origa system plus – OSP – provides a comprehensive range of linear guides for the pneumatic and electric linear drives.

Advantages:

- Takes high loads and forces
- High precision
- Smooth operation
- Can be retrofitted
- Can be installed in any position

Rodless Pneumatic Cylinder Series OSP - P

Piston diameters 10 – 80 mm

See page 129 (Standard)
See page 136 (ATEX-Version)



BASIC GUIDE
Compact, robust plain bearing guide for medium loads.

Piston diameters 25 – 50 mm

See page 139 (Standard)
See page 136 (ATEX-Version)

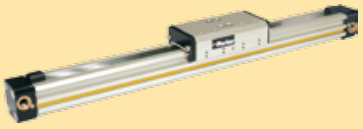

Linear Guides

SLIDELINE
The cost-effective plain bearing guide for medium loads.
Active/ Passive Brake optional.

Piston diameters 16 – 80 mm

See page 141 (Standard)
See page 136 (ATEX-Version)



POWERSLIDE
The roller guide for heavy loads and hard application conditions

Piston diameters 16 – 50 mm

See page 143



PROLINE
The compact aluminium roller guide for high loads and velocities.
Active/ Passive Brake optional.
Piston diameters 16 – 50 mm

See page 145



STARLINE
Recirculating ball bearing guide for very high loads and precision

Piston diameters 16 – 50 mm

See page 147



KF GUIDE
Recirculating ball bearing guide.
Correspond to FESTO dimensions (Type DGPL-KF)

Piston diameters 16 – 50 mm

See page 151



HD HEAVY DUTY GUIDE
Recirculating ball bearing guide for highest loads and greatest accuracy.

Piston diameters 25 – 50 mm

See page 153



Tel: +45 63 12 83 00 | Email: ps@hymatik.com | www.hymatik.com | Hvidkaervej 27a, DK-5250 Odense SV, Denmark

Plain Bearing Guide
BASIC GUIDE
Series BG 25 to 50 for Linear Drive
Compact, robust plain bearing guide for medium loads

OSP ORIGA SYSTEM PLUS



Features:
- Compact: guide rail integrated in cylinder profile tube
- Robust: wiper system and grease nipples for long service life
- smooth operation
- simple to (re-) adjust
- Integrated grease nipples
- Any length of stroke up to 6000 mm (longer strokes on request)

Options:
- Corrosion resistant version available on request
- VOE-Valves

Accessories:
- Mid-Section Support
- End Cap Mountings
- Magnetic Switches

Loads, Forces and Moments

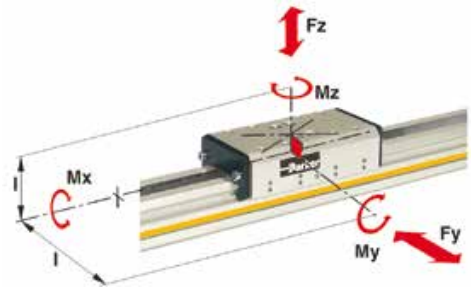

Technical Data

The table shows the maximum permissible values for smooth operation, which should not be exceeded even under dynamic conditions.

The load and moment figures apply to speeds v < 0.2 m/s.

For further technical information see catalogue P-A4P011GB

* **Please note:**
In the cushioning diagram, add the mass of the guide carriage to the mass to be cushioned.

$$\frac{Mx}{Mx_{max}} + \frac{My}{My_{max}} + \frac{Mz}{Mz_{max}} + \frac{Fy}{Fy_{max}} + \frac{Fz}{Fz_{max}} \leq 1$$

The sum of the loads should not exceed >1.

Loads, Forces and Moments

Composite sealing system with high-tech polymer and felt wiper elements to remove dirt and lubricate the slideways.

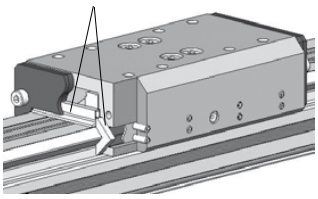

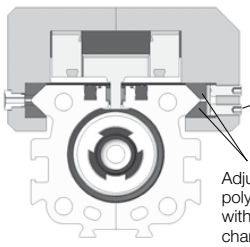

Series	Max. Moments [Nm]			Max. Load [Nm]	Mass of Basic Guide [kg]		Mass * of guide carriage [kg]	Cushion Length [mm]
	Mx	My	Mz	Fy, Fz	at 0 mm stroke	per 100 mm stroke		
BG25	10	28	28	590	1.09	0.22	0.29	17
BG32	17	43	43	850	2.26	0.38	0.69	20
BG40	39	110	110	1600	3.52	0.41	1.37	27
BG50	67	165	165	2000	5.30	0.58	1.91	30

Tel: +45 63 12 83 00 | Email: ps@hymatik.com | www.hymatik.com | Hvidkaervej 27a, DK-5250 Odense SV, Denmark

Order Instructions- BASIC GUIDE

1-6	7+8	9	10	11	12	13	14-18	19	20	21	22	23	24	25
OSPPBG	25	0	0	0	0	0	01100	0	0	0	0	0	0	0

Piston-Ø

25
32
40
50

Version / Piston

0	Standard
1	Tandem
* 6	ATEX Standard [3]

Air Connection

0	standard
1	on the end face
2	both at one end (not turnable)
3	left standard right end face
4	right standard left end face
A	3/2 way valve VOE 24 V= Ø 25, 32, 40, 50
B	3/2 way valve VOE 230 V~/110 V= Ø 25, 32, 40, 50
C	3/2 way valve VOE 48 V= Ø 25, 32, 40, 50
E	3/2 way valve VOE 110 V~ Ø 25, 32, 40, 50

Seals

0	standard (NBR)
1	Viton® [1]

Lubrication

0	standard
1	slow speed [2]

Screws

0	standard
1	stainless

Stroke

Input in mm (5 digits)

End cap position

0	l+r 0° = in front
1	l+r 90° = underneath
2	l+r 180° = at the back
3	l+r 270° = same side as outerband
4	l 90° = underneath; r 0° = in front
5	l 180° = at the back; r 0° = in front
6	l 270° = same side as outerband; r 0° = in front
7	l 0° = in front; r 90° = underneath
8	l 180° = at the back; r 90° = underneath
9	l 270° = same side as outerband; r 90° = underneath
A	l 0° = in front; r 180° = at the back
B	l 90° = underneath; r 180° = at the back
C	l 270° = same side as outerband; r 180° = at the back
D	l 0° = in front; r 270° = same side as outerband
E	l 90° = underneath; r 270° = same side as outerband
F	l 180° = at the back; r 270° = same side as outerband

Cushioning

0	standard

Piston Mounting

0	without

Cover / Cable Channel

0	standard
1	cable channel dove tail Ø 32, 40, 50
2	cable channel dove tail two-sided Ø 32, 40, 50

End cap position (air connection)

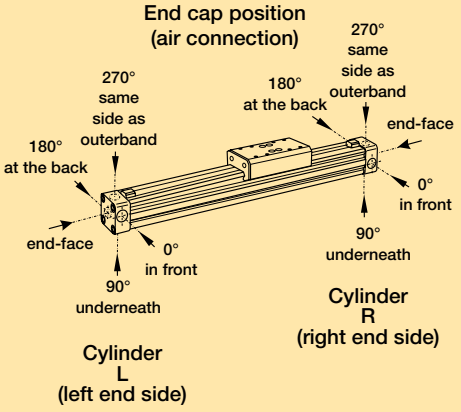

[1] Viton with VOE not possible.

[2] "Slow speed lubrication" in combination with „Viton® " seals on demand.

[3] ATEX with VOE not possible.

Tel: +45 63 12 83 00 | Email: ps@hymatik.com | www.hymatik.com | Hvidkaervej 27a, DK-5250 Odense SV, Denmark

Plain Bearing Guide
SLIDELINE
Series SL 16 to 80 for Linear Drive

Features:

- ATEX-version (without brake) is also available See page 136
- Anodised aluminium guide rail with prism-shaped slideway arrangement
- Adjustable plastic slide elements – optional with integral brake
- Composite sealing system with plastic and felt wiper elements to remove dirt and lubricate the slideways
- Corrosion resistant version available on request
- Any length of stroke up to 5500 mm (longer strokes on request)

OSP ORIGA SYSTEM PLUS



Integrated Brake (optional) for series OSP-P25 to OSP-P50:

- Actuated by pressure
- Released by exhausting and spring return

For further technical information see catalogue P-A4P011GB

Loads, Forces and Moments

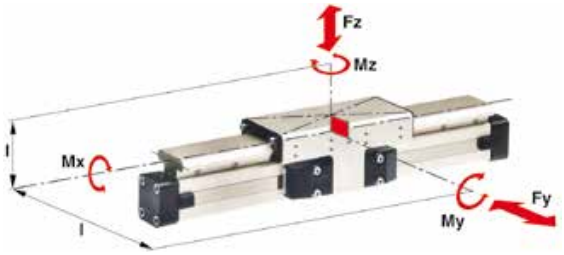

Technical Data

The table shows the maximum permissible values for smooth operation, which should not be exceeded even under dynamic conditions.
The load and moment figures apply to speeds v < 0.2 m/s.

For further technical information see catalogue P-A4P011GB

* **Please note:**
In the cushioning diagram, add the mass of the guide carriage to the mass to be cushioned.

1) Only with integrated brake: Braking force on dry oil-free surface Values are decreased for lubricated slideways

2) Corrosion resistant fixtures available on request

Carriage Without Brake

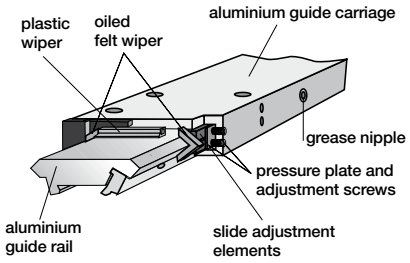

Option - Integrated Brake

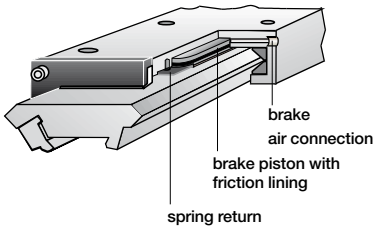

Series	For linear drive	Max. moments [Nm]			Max. loads [N]	Maximum braking force at 6 bar [N] 1)	Mass of linear drive with guide [kg]		Mass * of guide carriage [kg]	Order-No. ** SLIDELINE 2) Guide without cylinder	
		Mx	My	Mz	Fy, Fz		with 0 mm stroke	increase per 100 mm stroke		without brake	with brake
SL16	OSP-P16	6	11	11	325	-	0.57	0.22	0.23	**20341**	**-**
SL25	OSP-P25	14	34	34	675	325	1.55	0.39	0.61	**20342**	**20409**
SL32	OSP-P32	29	60	60	925	545	2.98	0.65	0.95	**20196**	**20410**
SL40	OSP-P40	50	110	110	1600	835	4.05	0.78	1.22	**20343**	**20411**
SL50	OSP-P50	77	180	180	2000	1200	6.72	0.97	2.06	**20195**	**20412**
SL63	OSP-P63	120	260	260	2500	-	11.66	1.47	3.32	**20853**	**-**
SL80	OSP-P80	120	260	260	2500	-	15.71	1.81	3.32	**21000**	**-**

** Please use this order pattern: Order-No. + „stroke in mm“ (5 digits)
Example: SLIDELINE guide without brake D25 mm, stroke 1000 mm: 20342-01000

Tel: +45 63 12 83 00 | Email: ps@hymatik.com | www.hymatik.com | Hvidkaervej 27a, DK-5250 Odense SV, Denmark

Order Instructions- SLIDELINE

1-4	5+6	7	8	9	10	11	12-16	17	18	19	20	21	22	23	24	25
OSPP	25	0	0	0	0	0	01100	0	0	0	0	0	0	0	0	0

Piston-Ø

16
25
32
40
50
63
80

Version / Piston

0	standard
1	Tandem

Air Connection

0	standard
1	on the end face
2	both at one end (not turnable)
3	left standard right end face
4	right standard left end face
A	3/2 way valve VOE 24 V= Ø 25,32,40, 50
B	3/2 way valve VOE 230 V~/110 V= Ø 25,32,40,50
C	3/2 way valve VOE 48 V= Ø 25,32,40,50
E	3/2 way valve VOE 110 V~ Ø 25,32,40,50

Seals

0	standard (NBR)
1	Viton® [1]

Lubrication

0	standard
1	slow speed [2]

Screws

0	standard
1	stainless

Stroke

Input in mm (5 digits)

End cap position

0	l+r 0° = in front
1	l+r 90° = underneath
2	l+r 180° = at the back
3	l+r 270° = same side as outerband
4	l 90° = underneath; r 0° = in front
5	l 180° = at the back; r 0° = in front
6	l 270° = same side as outerband; r 0° = in front
7	l 0° = in front; r 90° = underneath
8	l 180° = at the back; r 90° = underneath
9	l 270° = same side as outerband; r 90° = underneath
A	l 0° = in front; r 180° = at the back
B	l 90° = underneath; r 180° = at the back
C	l 270° = same side as outerband; r 180° = at the back
D	l 0° = in front; r 270° = same side as outerband
E	l 90° = underneath; r 270° = same side as outerband
F	l 180° = at the back; r 270° = same side as outerband

Cushioning

0	standard

Piston Mounting

0	without

Guides/ Brakes/ Inversion

0	without
2	Slideline SL Ø 16-80
3	Slideline with Activebrake SL-AB Ø 25-50
4	Slideline with Multibrake SL-MB Ø 25-80

add. Guide Carriage

0	without
2	Guide Carriage Slideline SL Ø 16-80
3	Guide Carriage Slideline Activebrake SL-AB Ø 26-50
4	Guide Carriage Slideline Multibrake SL-MB Ø 25-80
M	Guide Carriage Slideline Multibrake SL-MB without brakefunction Ø 25-80

Cover / Cable Channel

0	standard
1	cable channel
2	cable channel two-sided
X	without Cover rail

Measuring system

0	without
X	SFI 0.1 mm
Y	SFI 1 mm

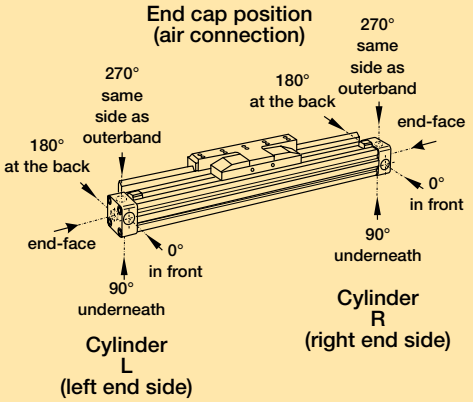

[1] Viton with VOE not possible.

[2] "Slow speed lubrication" in combination with „Viton®" seals on demand.

Tel: +45 63 12 83 00 | Email: ps@hymatik.com | www.hymatik.com | Hvidkaervej 27a, DK-5250 Odense SV, Denmark

Roller Guide
POWERSLIDE
Series PS 16 to 50 for Linear Drive

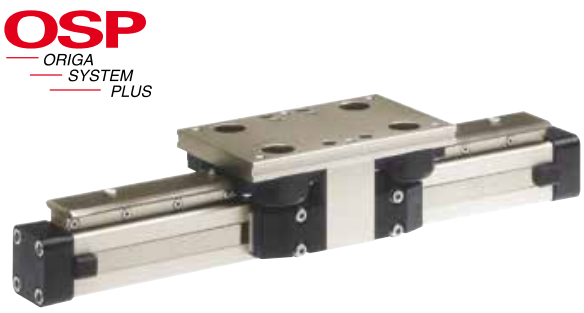

Features:

- Anodised aluminium guide carriage with vee rollers having 2 rows of ball bearings
- Hardened steel guide rail
- Several guide sizes can be used on the same drive
- Corrosion resistance version available on request
- Max. speed v = 3 m/s,
- Tough roller cover with wiper and grease nipple
- Any length of stroke up to 3500 mm, (longer strokes on request)

Loads, Forces and Moments

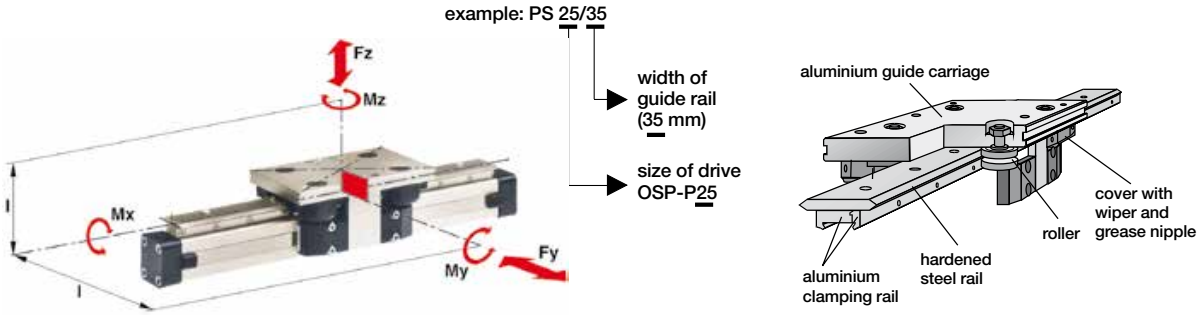

Technical Data

The table shows the maximum per-missible values for smooth operation, which should not be exceeded even under dynamic conditions.

For further technical information see catalogue P-A4P011GB

*** Please note:**
In the cushioning diagram, add the mass of the guide carriage to the mass to be cushioned.

Series	For linear drive	Max. Moment [Nm]			Max. loads [N]	Mass of linear drive with guide [kg]		Mass * guide carriage [kg]	**Order-No ** POWERSLIDE** Guide without cylinder [1]
		Mx	My	Mz	Fy, Fz	with 0 mm stroke	increase per 100 mm stroke		
PS 16/25	OSP-P16	14	45	45	1400	0.93	0.24	0.7	**20285**
PS 25/25	OSP-P25	14	63	63	1400	1.5	0.4	0.7	**20015**
PS 25/35	OSP-P25	20	70	70	1400	1.7	0.4	0.8	**20016**
PS 25/44	OSP-P25	65	175	175	3000	2.6	0.5	1.5	**20017**
PS 32/35	OSP-P32	20	70	70	1400	2.6	0.6	0.8	**20286**
PS 32/44	OSP-P32	65	175	175	3000	3.4	0.7	1.5	**20287**
PS 40/44	OSP-P40	65	175	175	3000	4.6	1.1	1.5	**20033**
PS 40/60	OSP-P40	90	250	250	3000	6	1.3	2.2	**20034**
PS 50/60	OSP-P50	90	250	250	3000	7.6	1.4	2.3	**20288**
PS 50/76	OSP-P50	140	350	350	4000	11.5	1.8	4.9	**20289**

[1] corrosion resistance version available on request (max. loads and moments are 25% lower)

** Please use this order pattern: Order-No. + „stroke in mm“ (5 digits)
Example: PS25/25 Guide D25 mm, stroke 1000 mm: 20015-01000

Tel: +45 63 12 83 00 | Email: ps@hymatik.com | www.hymatik.com | Hvidkaervej 27a, DK-5250 Odense SV, Denmark

Order Instructions- POWERSLIDE

1-4	5+6	7	8	9	10	11	12-16	17	18	19	20	21	22	23	24	25
OSPP	25	0	0	0	0	0	01100	0	0	0	0	0	0	0	0	0

Piston-Ø

16
25
32
40
50

Stroke

Input in mm (5 digits)

Piston Mounting

0	without

Measuring system

0	without
X	SFI 0.1 mm
Y	SFI 1 mm

Screws

0	standard
1	stainless

Cushioning

0	standard
1	max. length [3]

Version / Piston

0	standard
1	Tandem

Lubrication

0	standard
1	Slow speed [2][3]

End cap position

0	l+r 0° = in front
1	l+r 90° = underneath
2	l+r 180° = at the back
3	l+r 270° = same side as outerband
4	l 90° = underneath; r 0° = in front
5	l 180° = at the back; r 0° = in front
6	l 270° = same side as outerband; r 0° = in front
7	l 0° = in front; r 90° = underneath
8	l 180° = at the back; r 90° = underneath
9	l 270° = same side as outerband; r 90° = underneath
A	l 0° = in front; r 180° = at the back
B	l 90° = underneath; r 180° = at the back
C	l 270° = same side as outerband; r 180° = at the back
D	l 0° = in front; r 270° = same side as outerband
E	l 90° = underneath; r 270° = same side as outerband
F	l 180° = at the back; r 270° = same side as outerband

Guides/ Brakes/ Inversion

0	without
E	PSXX/25 Powerslide Ø 16, 25
F	PSXX/35 Powerslide Ø 25, 32
G	PSXX/44 Powerslide Ø 25, 32, 40
H	PSXX/60 Powerslide Ø 40, 50
I	PSXX/76 Powerslide Ø 50

Cover / Cable Channel

0	standard
1	cable channel
2	cable channel two-sided
X	without Cover rail

Air Connection

0	standard
1	on the end face
2	both at one end (not turnable)
3	left standard right end face
4	right standard left end face
A	3/2 way valve VOE 24 V= Ø 25,32,40, 50
B	3/2 way valve VOE 230 V~/110 V= Ø 25,32,40,50
C	3/2 way valve VOE 48 V= Ø 25,32,40,50
E	3/2 way valve VOE 110 V~ Ø 25,32,40,50

Seals

0	standard (NBR)
1	Viton® [1]

add. Guide Carriage

0	without
E	Guide Carriage Powerslide PSXX/25 Ø 16, 25
F	Guide Carriage Powerslide PSXX/35 Ø 25, 32
G	Guide Carriage Powerslide PSXX/44 Ø 25, 32, 40
H	Guide Carriage Powerslide PSXX/60 Ø 40, 50
I	Guide Carriage Powerslide PSXX/76 Ø 50

End cap position (air connection)

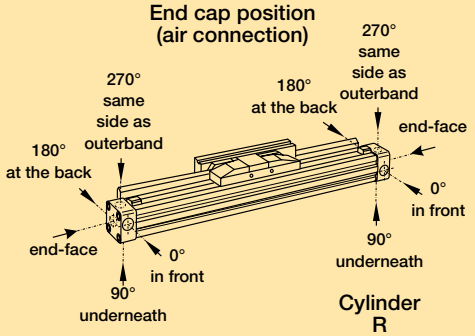

[1] Viton with VOE not possible.
[2] "Slow speed lubrication" in combination with „Viton®" seals on demand.
[3] „Lubrication slow speed" in combination with „max. cushioning length" not possible.

Tel: +45 63 12 83 00 | Email: ps@hymatik.com | www.hymatik.com | Hvidkaervej 27a, DK-5250 Odense SV, Denmark

Aluminium Roller Guide PROLINE

Series PL 16 to 50 for Linear Drive

Features:

- High precision
- High velocities (10 m/s)
- Smooth operation - low noise
- Integated wiper system
- Long life lubrication
- Compact dimensions - compatible to Slideline plain bearing guide
- Any length of stroke up to 3750 mm

OSP ORIGA SYSTEM PLUS



Integrated Brake (optional) for series OSP-P25 to OSP-P50:

- Actuated by pressurisation
- Released by depressurisation and spring actuation

Loads, Forces and Moments

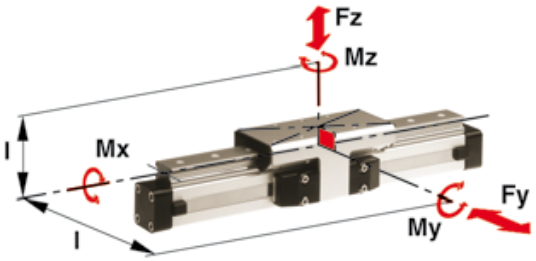

Technical Data

The table shows the maximal permissible loads. If multiple moments and forces act upon the cylinder simultaneously, the following equation applies:

$$\frac{Mx}{Mx_{max}} + \frac{My}{My_{max}} + \frac{Mz}{Mz_{max}} + \frac{Fy}{Fy_{max}} + \frac{Fz}{Fz_{max}} \leq 1$$

The sum of the loads should not exceed >1. With a load factor of less than 1, service life is 8000 km

The table shows the maximum permissible values for light, shock-free operation, which must not be exceeded even under dynamic conditions.

For further technical information see catalogue P-A4P011GB

* **Please note:**
The mass of the carriage has to be added to the total moving mass when using the cushioning diagram

Carriage Without Brake

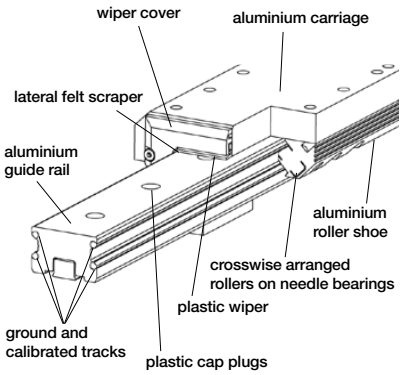

Option - Integrated Brake

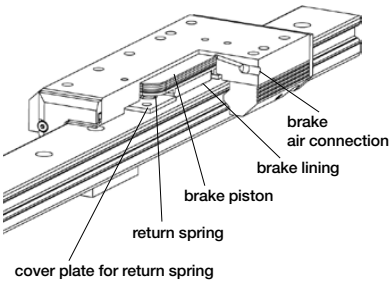

Series	For linear drive	Max. Moment [Nm]			Max. loads [N]	Maximum braking force at 6 bar [N] 1)	Mass of linear drive with guide [kg]		Mass * guide carriage [kg]	Order-No ** PROLINE Guide without cylinder	
		Mx	My	Mz	Fy, Fz		with 0 mm stroke	increase per 100 mm stroke		without Brake	with Brake
PL 16	OSP-P16	8	12	12	542	-	0.55	0.19	0.24	**20855**	**-**
PL 25	OSP-P25	16	39	39	857	on request	1.65	0.40	0.75	**20856**	**20860**
PL 32	OSP-P32	29	73	73	1171	on request	3.24	0.62	1.18	**20857**	**20861**
PL 40	OSP-P40	57	158	158	2074	on request	4.35	0.70	1.70	**20858**	**20862**
PL 50	OSP-P50	111	249	249	3111	on request	7.03	0.95	2.50	**20859**	**20863**

** Please use this order pattern: Order-No. + „stroke in mm“ (5 digits)
Example: PROLINE guide without brake D16 mm, stroke 1000 mm: 20855-01000

Tel: +45 63 12 83 00 | Email: ps@hymatik.com | www.hymatik.com | Hvidkaervej 27a, DK-5250 Odense SV, Denmark

Order Instructions- PROLINE

1-4	5+6	7	8	9	10	11	12-16	17	18	19	20	21	22	23	24	25
OSPP	25	0	0	0	0	0	01100	0	0	0	0	0	0	0	0	0

Piston-Ø

16
25
32
40
50

Stroke

Input in mm (5 digits)

Piston Mounting

0	without

Measuring system

0	without
X	SFI 0.1 mm
Y	SFI 1 mm

Screws

0	standard

Cushioning

0	standard
1	max. length [3]

Version / Piston

0	standard
1	Tandem

Lubrication

0	standard
1	Slow speed [2][3]

End cap position

0	l+r 0° = in front
1	l+r 90° = underneath
2	l+r 180° = at the back
3	l+r 270° = same side as outerband
4	l 90° = underneath; r 0° = in front
5	l 180° = at the back; r 0° = in front
6	l 270° = same side as outerband; r 0° = in front
7	l 0° = in front; r 90° = underneath
8	l 180° = at the back; r 90° = underneath
9	l 270° = same side as outerband; r 90° = underneath
A	l 0° = in front; r 180° = at the back
B	l 90° = underneath; r 180° = at the back
C	l 270° = same side as outerband; r 180° = at the back
D	l 0° = in front; r 270° = same side as outerband
E	l 90° = underneath; r 270° = same side as outerband
F	l 180° = at the back; r 270° = same side as outerband

Guides/ Brakes/ Inversion

0	without
6	Proline PL Ø 16-50
7	Proline with Activebrake PL-AB Ø 25-50
8	Proline with Multibrake PL-MB Ø 25-50

Cover / Cable Channel

0	standard
1	cable channel
2	cable channel two-sided
X	without Cover rail

Air Connection

0	standard
1	on the end face
2	both at one end (not turnable)
3	left standard right end face
4	right standard left end face
A	3/2 way valve VOE 24 V= Ø 25, 32, 40, 50
B	3/2 way valve VOE 230 V~/110 V= Ø 25, 32, 40, 50
C	3/2 way valve VOE 48 V= Ø 25, 32, 40, 50
E	3/2 way valve VOE 110 V~ Ø 25, 32, 40, 50

Seals

0	standard (NBR)
1	Viton® [1]

add. Guide Carriage

0	without
6	Guide Carriage Proline PL Ø 16-50
7	Guide Carriage Proline Activebrake PL-AB Ø 25-50
8	Guide Carriage Proline Multibrake PL-MB Ø 25-50
N	Guide Carriage Proline Multibrake PL-MB without brake function Ø 25-50

End cap position (air connection)

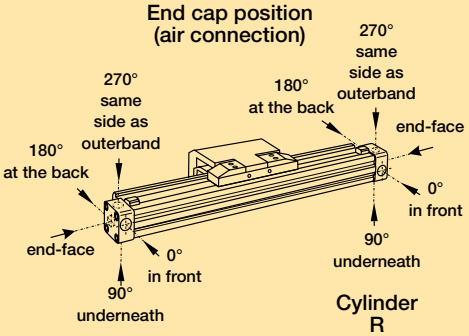

Cylinder L (left end side)

Cylinder R (right end side)

[1] Viton with VOE not possible.

[2] "Slow speed lubrication" in combination with „Viton®" seals on demand.

[3] „Lubrication slow speed" in combination with „max. cushioning length" not possible.

Tel: +45 63 12 83 00 | Email: ps@hymatik.com | www.hymatik.com | Hvidkaervej 27a, DK-5250 Odense SV, Denmark

Recirculating Ball Bearing Guide STARLINE

Series STL 16 to 50 for Linear Drive

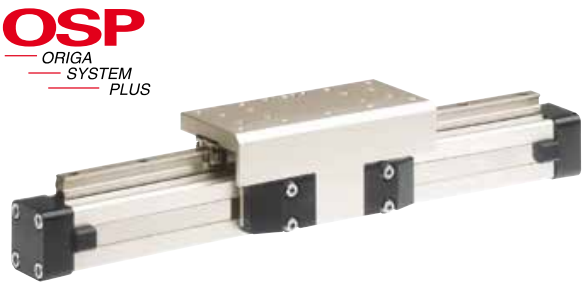

Features:

- Polished and hardened steel guide rail
- For very high loads in all directions
- High precision
- Integrated wiper system
- Integrated grease nipples
- Any length of stroke up to 3700 mm
- Anodized aluminium guide carriage – dimensions compatible with OSP guides SLIDELINE and PROLINE
- Installation height (STL16 - 32) compatible with OSP guides SLIDELINE and PROLINE
- Maximum speed
  STL16: v = 3 m/s
  STL25 to 50: v = 5 m/s

Loads, Forces and Moments

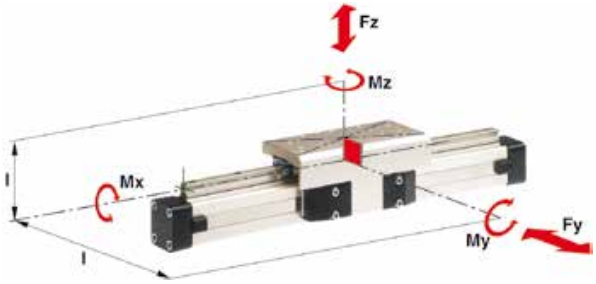

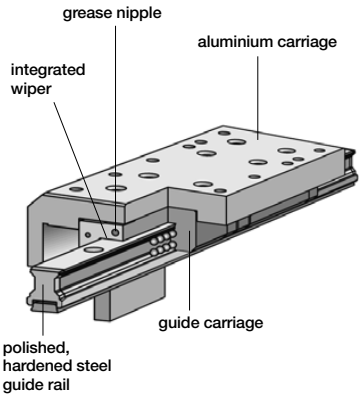

Technical Data

The table shows the maximal permissible loads. If multiple moments and forces act upon the cylinder simultaneously, the following equation applies:

$$\frac{Mx}{Mx_{max}} + \frac{My}{My_{max}} + \frac{Mz}{Mz_{max}} + \frac{Fy}{Fy_{max}} + \frac{Fz}{Fz_{max}} \leq 1$$

The sum of the loads should not exceed >1.

The table shows the maximum permissible values for light, shock-free operation, which must not be exceeded even under dynamic conditions.

For further technical information see catalogue P-A4P011GB

* **Please note:**
The mass of the carriage has to be added to the total moving mass when using the cushioning diagram

Series	For linear drive	Max. Moment [Nm]			Max. loads [N]		Mass of linear drive with guide [kg]		Mass * guide carriage [kg]	Order-No ** STARLINE Guide without cylinder
		Mx	My	Mz	Fy	Fz	with 0 mm stroke	increase per 100 mm stroke		
STL 16	OSP-P16	15	30	30	1000	1000	0.598	0.210	0.268	**21111**
STL 25	OSP-P25	50	110	110	3100	3100	1.733	0.369	0.835	**21112**
STL 32	OSP-P32	62	160	160	3100	3100	2.934	0.526	1.181	**21113**
STL 40	OSP-P40	150	400	400	4000	7500	4.452	0.701	1.901	**21114**
STL 50	OSP-P50	210	580	580	4000	7500	7.361	0.936	2.880	**21115**

** Please use this order pattern: Order-No. + „stroke in mm“ (5 digits)
Example: STARLINE guide D16 mm, stroke 1000 mm: 21111-01000

Parker Hannifin Corporation
Origa Division - Europe

Tel: +45 63 12 83 00 | Email: ps@hymatik.com | www.hymatik.com | Hvidkaervej 27a, DK-5250 Odense SV, Denmark

Variable Stop

Type VS16 to VS50

Arrangement with two variable stops

The variable stop Type VS provides simple stroke limitation. It can be retrofitted and positioned anywhere along the stroke length.

For every cylinder diameter two types of shock absorber are available – see „Shock Absorber Selection“.

Mid-section supports and magnetic switches can still be fitted on the same side as the variable stop.

Depending on the application, two variable stops can be fitted if required.

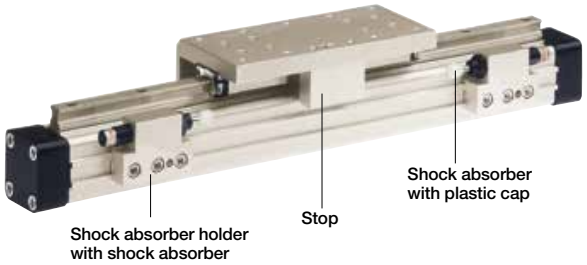

Shock Absorber Selection

The shock absorber is selected in dependence on the mass and speed.

The mass of the carrier itself must be taken into account.

Shock Absorber Selection in Dependence on Mass and Speed for Series OSP-STL16

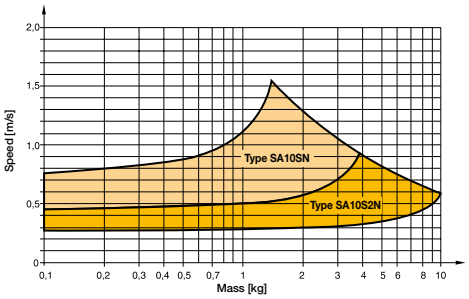

The values relate to an effective driving force of 78 N (6 bar)

Shock Absorber Selection in Dependence on Mass and Speed for Series OSP-STL25

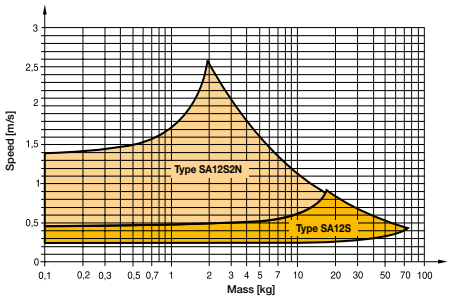

The values relate to an effective driving force of 250 N (6 bar)

Shock Absorber Selection in Dependence on Mass and Speed for Series OSP-STL32

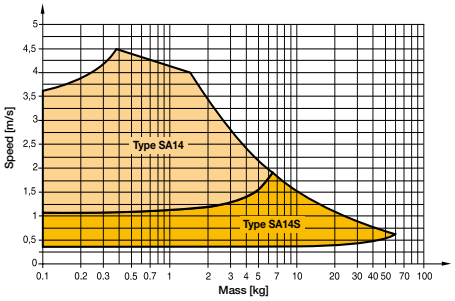

The values relate to an effective driving force of 420 N (6 bar)

Shock Absorber Selection in Dependence on Mass and Speed for Series OSP-STL40

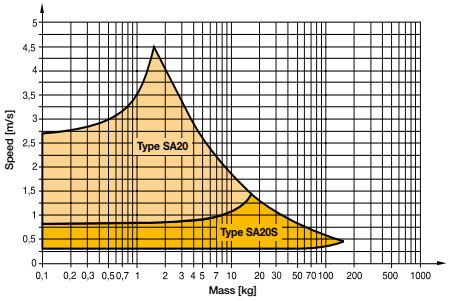

The values relate to an effective driving force of 640 N (6 bar)

Shock Absorber Selection in Dependence on Mass and Speed for Series OSP-STL50

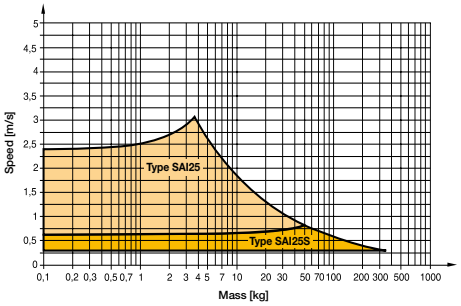

The values relate to an effective driving force of 1000 N (6 bar)

Tel: +45 63 12 83 00 | Email: ps@hymatik.com | www.hymatik.com | Hvidkaervej 27a, DK-5250 Odense SV, Denmark

Dimensions - Variable Stop Type VS16 to VS50

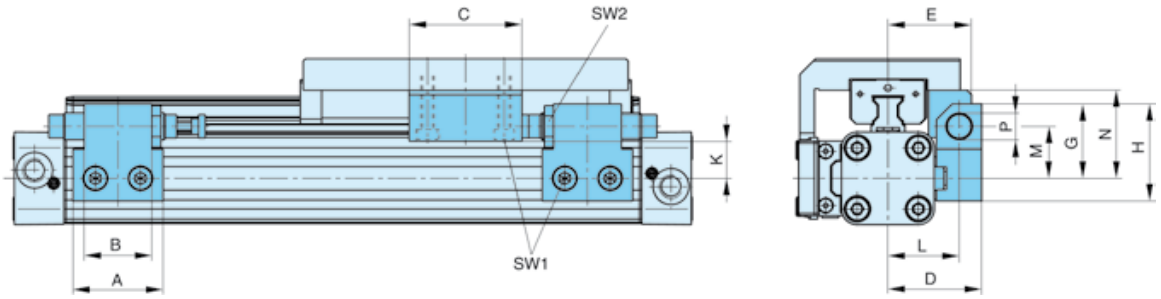

Dimension Table [mm] – Variable Stop Type VS16 to VS50

Series	Type	A	B	C	D	E	G	H	K	L	M	N	P	SW1	SW2
OSP-STL16	**VS16**	30	14	25	33	30	28	38	16.2	25.5	20.5	30	M10x1	4	12.5
OSP-STL25	**VS25**	40	30	50	41.5	37	33	43	18	31.5	23	39	M12x1	5	16
OSP-STL32	**VS32**	60	40	50	45.5	42	35	45	19	35.5	25	48	M14x1.5	5	17
OSP-STL40	**VS40**	84	52	60	64	59	48	63	25.6	50	34	58.6	M20x1.5	5	24
OSP-STL50	**VS50**	84	-	60	75	69	55	70	26.9	57	38	66.9	M25x1.5	5	30

Order information - Variable Stop Type VS16 to VS50 - without cylinder and without guide

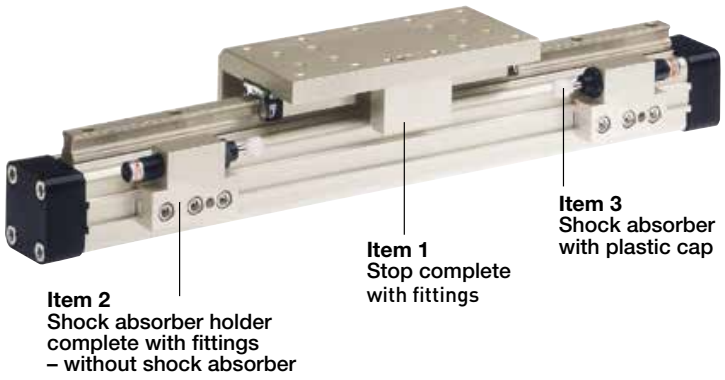

Item	Description	Size VS16		VS25		VS32		VS40		VS50	
		Type	Order No.	Type	Order No.	Type	Order No.	Type	Order No.	Type	Order No.
1	Stop, complete	-	**21196FIL**	-	**21197FIL**	-	**21198FIL**	-	**21199FIL**	-	**21200FIL**
2	Shock absorber holder complete	-	**21201FIL**	-	**21202FIL**	-	**21203FIL**	-	**21204FIL**	-	**21205FIL**
3*	Shock absorber, soft	**SA10SN**	**7718FIL**	**SA12S2N**	**7723FIL**	**SA14**	**7708FIL**	**SA20**	**7710FIL**	**SAI25**	**7712FIL**
	Shock absorber, hard	**SA10S2N**	**7721FIL**	**SA12S**	**7707FIL**	**SA14S**	**7709FIL**	**SA20S**	**7711FIL**	**SAI25S**	**7713FIL**

* Shock absorber with plastic cap

Note: Order instructions for VS in combination with the cylinder and guide see page 150, pos.18

Tel: +45 63 12 83 00 | Email: ps@hymatik.com | www.hymatik.com | Hvidkaervej 27a, DK-5250 Odense SV, Denmark

Order Instructions- STARLINE

1-4	5+6	7	8	9	10	11	12-16	17	18	19	20	21	22	23	24	25
OSPP	25	0	0	0	0	0	01100	0	0	0	0	0	0	0	0	0

Piston-Ø

16
25
32
40
50

Version / Piston

0	standard
1	Tandem

Air Connection

0	standard
1	on the end face
2	both at one end (not turnable)
3	left standard right end face
4	right standard left end face
A	3/2 way valve VOE 24 V= Ø 25, 32, 40, 50
B	3/2 way valve VOE 230 V~/110 V= Ø 25, 32, 40, 50
C	3/2 way valve VOE 48 V= Ø 25, 32, 40, 50
E	3/2 way valve VOE 110 V~ Ø 25, 32, 40, 50

Seals

0	standard (NBR)
1	Viton® [1]

Lubrication

0	standard
1	Slow speed [2][3]

Screws

0	standard

Stroke

Input in mm (5 digits)

End cap position

0	l+r 0° = in front
1	l+r 90° = underneath
2	l+r 180° = at the back
3	l+r 270° = same side as outerband
4	l 90° = underneath; r 0° = in front
5	l 180° = at the back; r 0° = in front
6	l 270° = same side as outerband; r 0° = in front
7	l 0° = in front; r 90° = underneath
8	l 180° = at the back; r 90° = underneath
9	l 270° = same side as outerband; r 90° = underneath
A	l 0° = in front; r 180° = at the back
B	l 90° = underneath; r 180° = at the back
C	l 270° = same side as outerband; r 180° = at the back
D	l 0° = in front; r 270° = same side as outerband
E	l 90° = underneath; r 270° = same side as outerband
F	l 180° = at the back; r 270° = same side as outerband

Cushioning

0	standard
1	max. length [3]
2	VS variable stop, soft left for Starline
3	VS variable stop, hard, left for Starline
4	VS variable stop, soft, right for Starline
5	VS variable stop, hard, right for Starline
6	VS variable stop, soft, both sides for Starline
7	VS variable stop, hard, both sides for Starline

Piston Mounting

0	without

Guides/ Brakes/ Inversion

0	without
B	Starline STL

add. Guide Carriage

0	without
B	Guide Carriage Starline STL

Measuring system

0	without
X	SFI 0.1 mm
Y	SFI 1 mm

Cover / Cable Channel

0	standard
1	cable channel
2	cable channel two-sided
X	without Cover rail

End cap position (air connection)

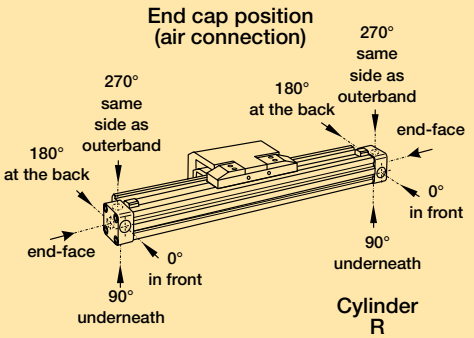

Cylinder L (left end side)

Cylinder R (right end side)

[1] Viton with VOE not possible.

[2] "Slow speed lubrication" in combination with „Viton®" seals on demand.

[3] „Lubrication slow speed" in combination with „max. cushioning length" not possible.

Tel: +45 63 12 83 00 | Email: ps@hymatik.com | www.hymatik.com | Hvidkaervej 27a, DK-5250 Odense SV, Denmark

Recirculating Ball Bearing Guide
Series KF 16 to 50 for Linear Drive

Features:

- Anodized aluminium guide carriage, the mounting dimensions correspond to FESTO Type: DGPL-KF
- Polished and hardened steel guide rail
- For high loads in all directions
- High precision
- Integrated wiper system
- Integrated grease nipples
- Any length of stroke up to 3700 mm

OSP
ORIGA SYSTEM PLUS



- Maximum speed
  KF16, KF40: v = 3 m/s
  KF25, KF32, KF50: v = 5 m/s

Loads, Forces and Moments

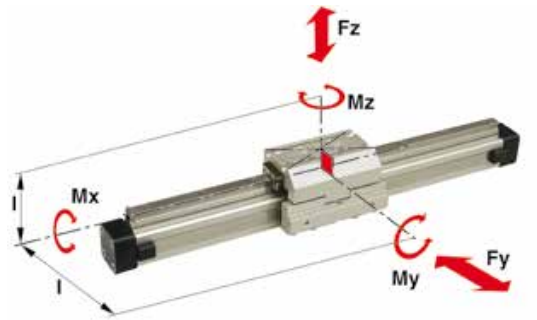

Technical Data

The table shows the maximal permissible loads. If multiple moments and forces act upon the cylinder simultaneously, the following equation applies:

$$\frac{Mx}{Mx_{max}} + \frac{My}{My_{max}} + \frac{Mz}{Mz_{max}} + \frac{Fy}{Fy_{max}} + \frac{Fz}{Fz_{max}} \leq 1$$

The sum of the loads should not exceed >1.

The table shows the maximum permissible values for light, shock-free operation, which must not be exceeded even under dynamic conditions.

For further technical information see catalogue P-A4P011GB

Variable Stop

The variable stop Type VS provides simple stroke limitation. It can be retrofitted and positioned anywhere along the stroke length. For every cylinder diameter two types of shock absorber are available. Mid-section supports and magnetic switches can still be fitted on the same side as the variable stop.

Depending on the application, two variable stops can be fitted if required.

Variable Stop Type VS16 to VS50

Arrangement with two variable stops

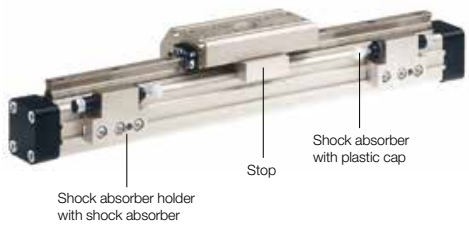

For shock absorber selection in dependence on mass and speed see page 148.

* **Please note:**
The mass of the carriage has to be added to the total moving mass when using the cushioning diagram

Series	For linear drive	Max. moment [Nm]			Max. loads [N]		Mass of linear drive with guide [kg]		Mass * guide carriage [kg]	Groove stone	Order-No.	
		Mx	My	Mz	Fy	Fz	with 0 mm stroke	increase per 100 mm stroke		Thread size	Groove Stone	Guide KF without cylinder **
KF16	OSP-P16	12	25	25	1000	1000	0.558	0.21	0.228	-	**-**	**21101**
KF25	OSP-P25	35	90	90	3100	3100	1.522	0.369	0.607	M5	**13508FIL**	**21102**
KF32	OSP-P32	44	133	133	3100	3100	2.673	0.526	0.896	M5	**13508FIL**	**21103**
KF40	OSP-P40	119	346	346	4000	7100	4.167	0.701	1.531	M6	**13509FIL**	**21104**
KF50	OSP-P50	170	480	480	4000	7500	7.328	0.936	2.760	M8	**13510FIL**	**21105**

** Please use this order pattern: Order-No. + „stroke in mm“ (5 digits)
Example: KF guide D16 mm, stroke 1000 mm: 21101-01000

Note: Order instructions for VS in combination with the cylinder and guide see page 152, pos.18

Tel: +45 63 12 83 00 | Email: ps@hymatik.com | www.hymatik.com | Hvidkaervej 27a, DK-5250 Odense SV, Denmark

Order Instructions- KF

1-4	5+6	7	8	9	10	11	12-16	17	18	19	20	21	22	23	24	25
OSPP	25	0	0	0	0	0	01100	0	0	0	0	0	0	0	0	0

Piston-Ø

16
25
32
40
50

Version / Piston

C	Classic
T	Classic Tandem

Air Connection

0	standard
1	on the end face
2	both at one end (not turnable)
3	left standard right end face
4	right standard left end face
A	3/2 way valve VOE 24 V= Ø 25,32,40, 50
B	3/2 way valve VOE 230 V~/110 V= Ø 25, 32, 40, 50
C	3/2 way valve VOE 48 V= Ø 25, 32, 40, 50
E	3/2 way valve VOE 110 V~ Ø 25, 32, 40, 50

Seals

0	standard (NBR)
1	Viton® [1]

Lubrication

0	standard
1	Slow speed [2][3]

Screws

0	standard

Stroke

Input in mm (5 digits)

End cap position

0	l+r 0° = in front
1	l+r 90° = underneath
2	l+r 180° = at the back
3	l+r 270° = same side as outerband
4	l 90° = underneath; r 0° = in front
5	l 180° = at the back; r 0° = in front
6	l 270° = same side as outerband; r 0° = in front
7	l 0° = in front; r 90° = underneath
8	l 180° = at the back; r 90° = underneath
9	l 270° = same side as outerband; r 90° = underneath
A	l 0° = in front; r 180° = at the back
B	l 90° = underneath; r 180° = at the back
C	l 270° = same side as outerband; r 180° = at the back
D	l 0° = in front; r 270° = same side as outerband
E	l 90° = underneath; r 270° = same side as outerband
F	l 180° = at the back; r 270° = same side as outerband

Cushioning

0	standard
1	max. length [3]
2	VS variable stop, soft left for KF
3	VS variable stop, hard, left for KF
4	VS variable stop, soft, right for KF
5	VS variable stop, hard, right for KF
6	VS variable stop, soft, both sides for KF
7	VS variable stop, hard, both sides for KF

Piston Mounting

0	without

Guides/ Brakes/ Inversion

0	without
C	KF

add. Guide Carriage

0	without
C	Guide Carriage KF

Measuring system

0	without
X	SFI 0.1 mm
Y	SFI 1 mm

Cover / Cable Channel

0	standard
1	cable channel
2	cable channel two-sided
X	without Cover rail

End cap position (air connection)

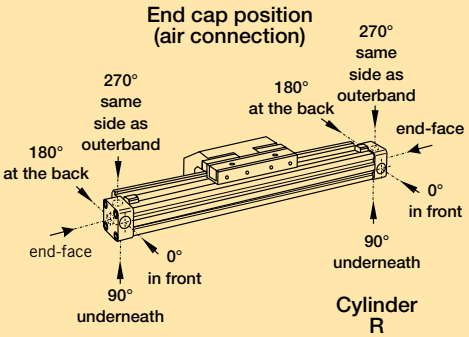

Cylinder L (left end side)

Cylinder R (right end side)

[1] Viton with VOE not possible.

[2] "Slow speed lubrication" in combination with „Viton®" seals on demand.

[3] „Lubrication slow speed" in combination with „max. cushioning length" not possible.

Heavy Duty Guide
HD
Series HD 25 to 50 for Linear Drive

Features:

- Guide system: 4-row recirculating ball bearing guide
- Polished and hardened steel guide rail
- For highest loads in all directions
- Highest precision
- Integrated wiper system
- Integrated grease nipples
- Any lengths of stroke up to 3700 mm (longer strokes on request)
- Anodized aluminium guide carriage - dimensions compatible with OSP guide GUIDELINE
- Maximum speed v = 5 m/s

Loads, Forces and Moments

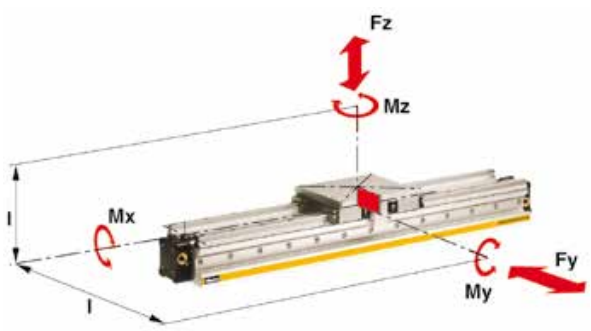

Technical Data

The table shows the maximal permissible loads. If multiple moments and forces act upon the cylinder simultaneously, the following equation applies:

$$\frac{Mx}{Mx_{max}} + \frac{My}{My_{max}} + \frac{Mz}{Mz_{max}} + \frac{Fy}{Fy_{max}} + \frac{Fz}{Fz_{max}} \leq 1$$

The sum of the loads should not exceed >1.

The table shows the maximum permissible values for light, shock-free operation, which must not be exceeded even under dynamic conditions.

For further technical information see catalogue P-A4P011GB



Options:

- With variable stop
- With intermediate stop module

Version with pneumatic linear drive series OSP-P

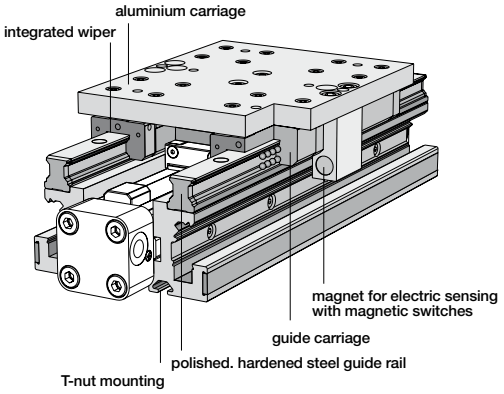

Variable Stop

Variable Stop Type VS25 to VS50

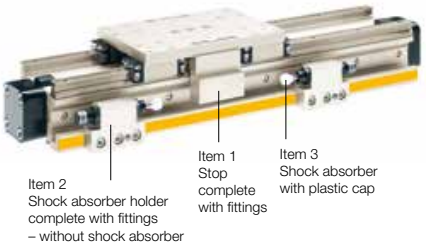

For shock absorber selection in dependence on mass and speed see page 148.

* **Please note:**
The mass of the carriage has to be added to the total moving mass when using the cushioning diagram

Series	For linear drive	Max. moment [Nm]			Max. loads [N]		Mass of linear drive with guide carriage [kg]		Mass * guide [kg]	Order-No. ** HD Guide without cylinder
		Mx	My	Mz	Fy	Fz	with 0 mm stroke	increase per 100 mm stroke		
HD 25	OSP-P25	260	320	320	6000	6000	3.065	0.924	1.289	**21246**
HD 32	OSP-P32	285	475	475	6000	6000	4.308	1.112	1.367	**21247**
HD 40	OSP-P40	800	1100	1100	15000	15000	7.901	1.748	2.712	**21248**
HD 50	OSP-P50	1100	1400	1400	18000	18000	11.648	2.180	3.551	**21249**

** Please use this order pattern: Order-No. + „stroke in mm“ (5 digits)
Example: HD Guide D25 mm, stroke 1000 mm: 21246-01000

Note: Order instructions for VS in combination with HD guide see page 154, pos.18

Parker Hannifin Corporation
Origa Division - Europe

Tel: +45 63 12 83 00 | Email: ps@hymatik.com | www.hymatik.com | Hvidkaervej 27a, DK-5250 Odense SV, Denmark

Order Instructions- HEAVY DUTY - HD

1-4	5+6	7	8	9	10	11	12-16	17	18	19	20	21	22	23	24	25
OSPP	25	0	0	0	0	0	01100	0	0	0	0	0	0	0	0	0

Piston-Ø

25
32
40
50

Stroke

Input in mm (5 digits)

Piston Mounting

0	without

Measuring system

0	without
X	SFI 0.1 mm
Y	SFI 1 mm

Screws

0	standard

Cushioning

0	standard
1	max. length [3]
2	VS variable stop, soft left for HD
3	VS variable stop, hard, left for HD
4	VS variable stop, soft, right for HD
5	VS variable stop, hard, right for HD
6	VS variable stop, soft, both sides for HD
7	VS variable stop, hard, both sides for HD

Version / Piston

0	standard
1	Tandem

Lubrication

0	standard
1	Slow speed [2] [3]

Cover / Cable Channel

0	standard
1	cable channel
2	cable channel two-sided
X	without Cover rail

Air Connection

0	standard
1	on the end face
2	both at one end (not turnable)
3	left standard right end face
4	right standard left end face
A	3/2 way valve VOE 24 V= Ø 25, 32, 40, 50
B	3/2 way valve VOE 230 V~/110 V= Ø 25, 32, 40, 50
C	3/2 way valve VOE 48 V= Ø 25, 32, 40, 50
E	3/2 way valve VOE 110 V~ Ø 25, 32, 40, 50

Seals

0	standard (NBR)
1	Viton® [1]

End cap position

0	l+r 0° = in front
1	l+r 90° = underneath
2	l+r 180° = at the back
3	l+r 270° = same side as outerband
4	l 90° = underneath; r 0° = in front
5	l 180° = at the back; r 0° = in front
6	l 270° = same side as outerband; r 0° = in front
7	l 0° = in front; r 90° = underneath
8	l 180° = at the back; r 90° = underneath
9	l 270° = same side as outerband; r 90° = underneath
A	l 0° = in front; r 180° = at the back
B	l 90° = underneath; r 180° = at the back
C	l 270° = same side as outerband; r 180° = at the back
D	l 0° = in front; r 270° = same side as outerband
E	l 90° = underneath; r 270° = same side as outerband
F	l 180° = at the back; r 270° = same side as outerband

Guides/ Brakes/ Inversion

0	without
D	HD

add. Guide Carriage

0	without
D	Guide Carriage HD

End cap position (air connection)

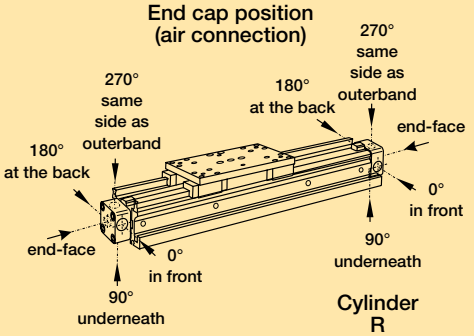

[1] Viton with VOE not possible.

[2] "Slow speed lubrication" in combination with „Viton® " seals on demand.

[3] „Lubrication slow speed" in combination with „max. cushioning length" not possible.

Tel: +45 63 12 83 00 | Email: ps@hymatik.com | www.hymatik.com | Hvidkaervej 27a, DK-5250 Odense SV, Denmark

Intermediate Stop Module

Type ZSM .. HD

The intermediate stop module ZSM allows the guide carriage to stop at any desired intermediate positions with high accuracy. It can be retrofitted. Depending on the application, i.e. the number of intermediate stops, one or more intermediate position stops can be used. The intermediate position stops can be retracted and extended without the need for the guide carriage to be moved back out of position.
Therefore the guide carriage can be made to stop at the defined intermediate positions in any order.

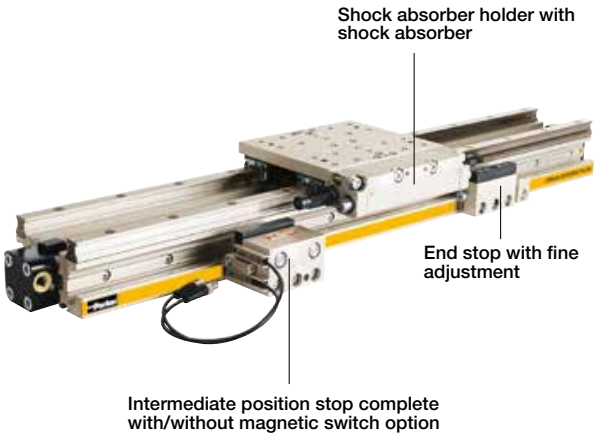

ORIGA intermediate stop module ZSM:

- Allows stopping at any intermediate positions
- Intermediate position stops can be located steplessly anywhere along the whole stroke length
- Movement to the next position without reverse stroke
- Compact unit
- Cost-effective positioning module without electrical or electronic components
- Option: end stop with fine adjustment

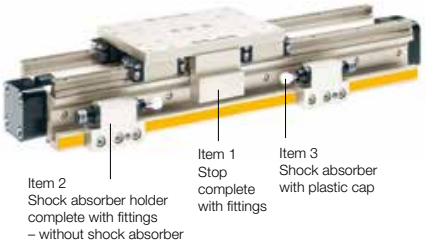

Operating information

Operating pressure range:	4 - 8 bar
Temperature range:	-10°C to +70°C
Intermediate position grid	85 mm

Shock Adsorbers Type SA14S

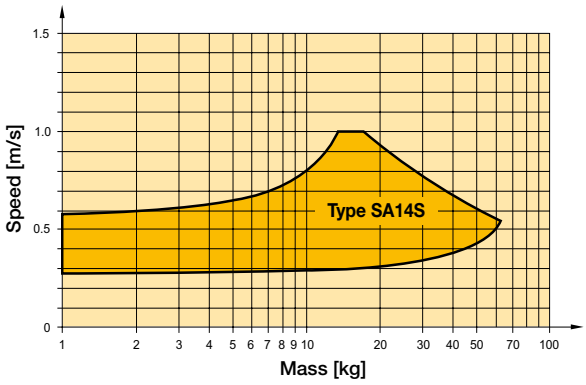

The values relate to an effective driving force of 250 N (6 bar)

Order Instructions - Intermediate Stop Module - Type ZSM..HD

Item	Description	For intermediate stop module	Order-No.
1*	Shock absorber holder with shock absorber SA14S, both sides	**ZSM25HD**	**21342BFIL**
2*	Shock absorber holder with shock absorber SA14S, left	**ZSM25HD**	**21342LFIL**
3*	Shock absorber holder with shock absorber SA14S, right	**ZSM25HD**	**21342RFIL**
4	Intermediate position stop complete, without magnetic switch option	**ZSM25HD**	**21343FIL**
5	Intermediate position stop complete, with magnetic switch option	**ZSM25HD**	**21344FIL**
6	End stop with fine adjustment	**ZSM25HD**	**21346FIL**

* The shock absorbers are installed in the shock absorber holder and adjusted in our workshop.

Note:
For movement onwards from the intermediate position, the intermediate position stop must advance.
The intermediate position stop can only advance if both cylinder chambers of the OSP-P cylinder are pressurized.

For further technical information see catalogue P-A4P011GB

Tel: +45 63 12 83 00 | Email: ps@hymatik.com | www.hymatik.com | Hvidkaervej 27a, DK-5250 Odense SV, Denmark

OSP
ORIGA SYSTEM PLUS

Active Brakes and Passive Brakes

Versions:

- ACTIVE Brake
- Plain bearing guide with integrated ACTIVE Brake
- Aluminium roller guide with integrated ACTIVE Brake
- Plain bearing guide with PASSIVE Brake
- Aluminium roller guide with PASSIVE Brake

Active Brake
for pneumatic linear drive
Series OSP-P
Piston diameters 25 - 80 mm.

See page 157



Slideline with Active Brake
Plain bearing guide SLIDELINE - SL
with integrated ACTIVE Brake
Piston diameters 25 - 50 mm.

See page 141



Proline with Active Brake
Aluminium roller guide
PROLINE - PL with
integrated ACTIVE Brake
Piston diameters 25 - 50 mm.

See page 145



Multibrake with Slideline
MULTI BRAKE – PASSIVE Brake
with plainbearing guide
SLIDELINE - SL
Piston diameter 25 - 80 mm.

See page 158



Multibrake with Proline
MULTI BRAKE – PASSIVE Brake
with aluminium roller guide
PROLINE - PL
Piston diameters 25 - 50 mm.

See page 159



Tel: +45 63 12 83 00 | Email: ps@hymatik.com | www.hymatik.com | Hvidkaervej 27a, DK-5250 Odense SV, Denmark

Active Brake

Series AB 25 to 80 for Linear Drive

OSP ORIGA SYSTEM PLUS



Features:

- Actuated by pressurisation
- Released by spring actuation
- Completely stainless version
- Holds position, even under changing load conditions

Function

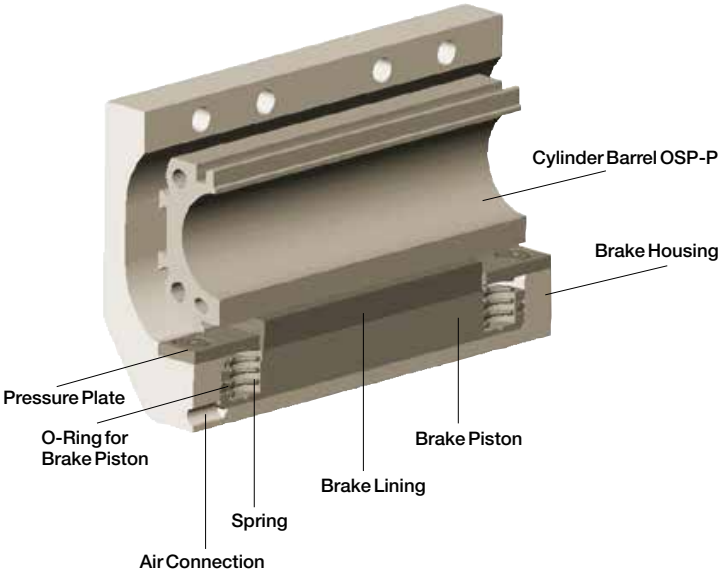

Forces and Weights

Series	For linear drive	Max. braking force [N] (1	Brake pad way [mm]	Mass [kg] Linear drive with brake 0 mm stroke	Mass [kg] Linear drive with brake increase per 100 mm stroke	Mass [kg] Brake *
AB 25	OSP-P25	350	2.5	1.0	0.197	0.35
AB 32	OSP-P32	590	2.5	2.02	0.354	0.58
AB 40	OSP-P40	900	2.5	2.83	0.415	0.88
AB 50	OSP-P50	1400	2.5	5.03	0.566	1.50
AB 63	OSP-P63	2170	3.0	9.45	0.925	3.04
AB 80	OSP-P80	4000	3.0	18.28	1.262	5.82

(1 – at 6 bar
both chambers pressurised with 6 bar
Braking surface dry
– oil on the braking surface will reduce the braking force

*** Please Note:**
The mass of the brake has to be added to the total moving mass when using the cushioning diagram.

For further technical information see catalogue P-A4P011GB

Note:
For combinations Active Brake AB + SFI-plus + Magnetic Switch contact our technical department please.

Active brake in combination with Basic Cylinder see page 132, pos.20

Tel: +45 63 12 83 00 | Email: ps@hymatik.com | www.hymatik.com | Hvidkaervej 27a, DK-5250 Odense SV, Denmark

Multi-Brake
Passive Brake

with plain bearing guide Slideline SL
Series MB-SL 25 to 80 for Linear Drive

Features:

- Brake operated by spring actuation
- Brake release by pressurisation
- Anodised aluminium rail, with prism shaped slide elements
- Adjustable plastic slide elements
- Composite sealing system with plastic and felt wiper elements to remove dirt and lubricate the slideway
- Replenishable guide lubrication by integrated grease nipples
- Blocking function in case of pressure loss
- Intermediate stops possible

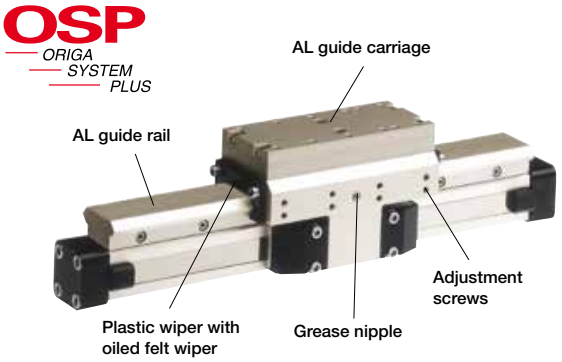

Function:

The Multi-Brake is a passive device. When the air pressure is removed the brake is actuated and movement of the cylinder is blocked. The brake is released by pressurisation. The high friction, wear resistant brake linings allow the Multi-Brake to be used as a dynamic brake to stop cylinder movement in the shortest possible time. The powerful springs also allow the Multi-Brake to be used effectively in positioning applications.

Loads, Forces and Moments

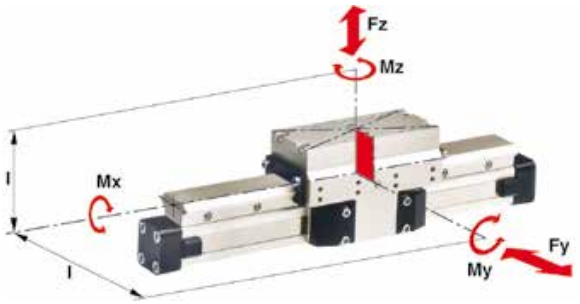

Technical Data

The table shows the maximum values for light, shock-free operation, which must not be exceeded even in dynamic operation.

Load and moment data are based on speeds v < 0.2 m/s.
Operating pressure 4.5 - 8 bar
A pressure of 4.5 bar is required to release the brake.

For further technical information see catalogue P-A4P011GB

Function

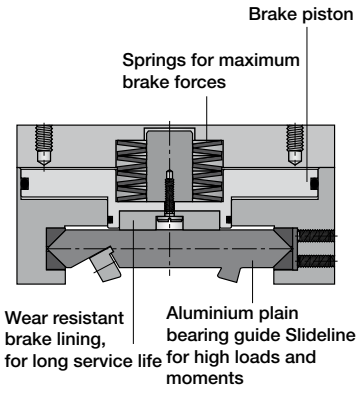

* **Please note:**
in the cushioning diagram, the mass of the guide carriage has to be added to the total moving mass.

[1] Braking surface dry – oil on the braking surface will reduce the braking force

Series	For linear drive	Max. moments [Nm]			Max. loads [N]	Max. brake force [N] [1]	Mass of linear drive with guide [kg]		Mass [2] guide carriage [kg]	**Order-No. **** MB-SL Guide with passivebrake without cylinder *
		Mx	My	Mz	Fy, Fz		with 0 mm stroke	increase per 100 mm stroke		
MB-SL 25	OSP-P25	14	34	34	675	470	2.04	0.39	1.10	**20796**
MB-SL 32	OSP-P32	29	60	60	925	790	3.82	0.65	1.79	**20797**
MB-SL 40	OSP-P40	50	110	110	1600	1200	5.16	0.78	2.34	**20798**
MB-SL 50	OSP-P50	77	180	180	2000	1870	8.29	0.97	3.63	**20799**
MB-SL 63	OSP-P63	120	260	260	2500	2900	13.31	1.47	4.97	**20800**
MB-SL 80	OSP-P80	120	260	260	2500	2900	17.36	1.81	4.97	**20846**

** Please use this order pattern: Order-No. + „stroke in mm“ (5 digits)
Example: MB-SL guide with passive brake D 25 mm, stroke 1000 mm: 20796-01000

MB-SL in combination with cylinder see page142, pos. 20

Parker Hannifin Corporation
Origa Division - Europe

Tel: +45 63 12 83 00 | Email: ps@hymatik.com | www.hymatik.com | Hvidkaervej 27a, DK-5250 Odense SV, Denmark

Multi-Brake
Passive Brake

with Aluminium Roller Guide Proline PL
Series MB-PL 25 to 50 for Linear Drive

Features:

- Brake operated by spring actuation
- Brake release by pressurisation
- Composite sealing system with plastic and felt wiper elements to remove dirt and lubricate the slideway
- Blocking function in case of pressure loss
- Intermediate stops possible

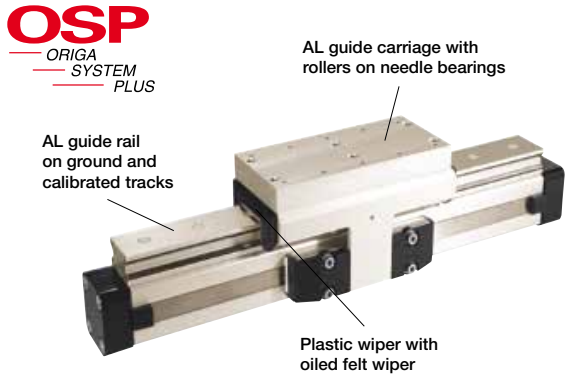

Function:

The Multi-Brake is a passive device. When the air pressure is removed the brake is actuated and movement of the cylinder is blocked. The brake is released by pressurisation. The high friction, wear resistant brake linings allow the Multi-Brake to be used as a dynamic brake to stop cylinder movement in the shortest possible time. The powerful springs also allow the Multi-Brake to be used effectively in positioning applications.

Loads, Forces and Moments

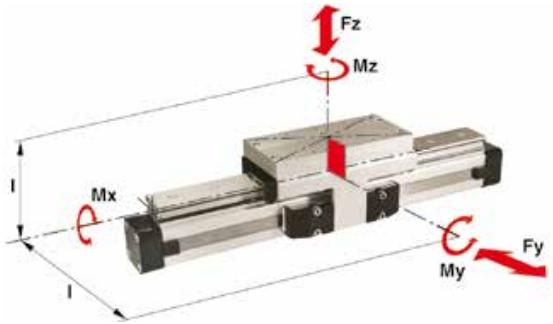

Technical Data

The table shows the maximal permissible loads. If multiple moments and forces act upon the cylinder simultaneously, the following equasion applies:

$$\frac{Mx}{Mx_{max}} + \frac{My}{My_{max}} + \frac{Mz}{Mz_{max}} + \frac{Ly}{Ly_{max}} + \frac{Lz}{Lz_{max}} \leq 1$$

The sum of the loads should not exceed >1.
With a load factor of less than 1, service life is 8000 km

Function

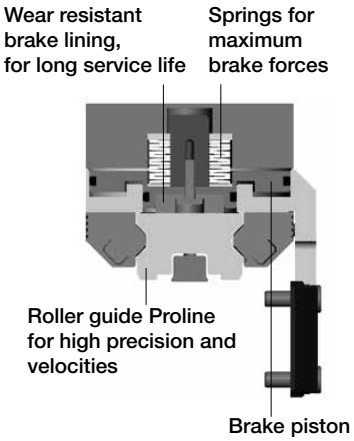

The table shows the maximum permissible values for light, shock-free operation, which must not be exceeded even under dynamic conditions.

Operating Pressure 4.5 - 8 bar. A pressure of min. 4.5 bar release the brake.

For further technical information see catalogue P-A4P011GB

Series	For linear drive	Max. moments [Nm] Mx	My	Mz	Max. loads [N] Fy, Fz	Max. brake force [N] [1]	Mass of linear drive with guide [kg] with 0 mm stroke	increase per 100 mm stroke	Mass [2] guide carrriage [kg]	Order-No. ** MB-PL Guide with passivebrake without cylinder *
MB-PL25	OSP-P25	16	39	39	857	315	2.14	0.40	1.24	**20864**
MB-PL32	OSP-P32	29	73	73	1171	490	4.08	0.62	2.02	**20865**
MB-PL40	OSP-P40	57	158	158	2074	715	5.46	0.70	2.82	**20866**
MB-PL50	OSP-P50	111	249	249	3111	1100	8.60	0.95	4.07	**20867**

** Please use this order pattern: Order-No. + „stroke in mm“ (5 digits)
Example: MB-PL guide with passive brake, D25 mm, stroke 1000 mm: 20864-01000

MB-PL in combination with cylinder see page 146, pos. 20

Tel: +45 63 12 83 00 | Email: ps@hymatik.com | www.hymatik.com | Hvidkaervej 27a, DK-5250 Odense SV, Denmark

Linear Drive Accessories

(Mountings and Magnetic Switches)

Series OSP-P



Description
Overview
Clevis Mounting
End Cap Mountings
End Cap Mountings (for Linear Drives with guides)
Mid-Section Support
Mid-Section Support (for Linear Drives with guides)
Inversion Mounting
Adaptor Profile
T-Slot Profile
Connection Profile
Duplex Connection
Multiplex Connection
Magnetic Switch, standard version
Magnetic Switch for T-Nut mounting
Magnetic Switch ATEX-version ⟨Ex⟩
Cable Cover

See Catalogue P-A4P011GB

Origa - Sensoflex

Displacement measuring system for automated movement

Series SFI-plus (Incremental measuring system)



Characteristics:

- Contactless magnetic displacement measurement system
- Displacement length up to 32 m
- Resolution 0.1 mm (option: 1 mm)
- Displacement speed up to 10m/s
- For linear and non-linear rotary motion
- Suitable for almost any control or display unit with a counter input

The SFI-plus magnetic displacement measuring system consists of 2 main components.

- Measuring Scale
  Self-adhesive magnetic measuring scale
- Sensing Head
  Converts the magnetic poles into electrical signals which are then processed by counter inputs down stream

  (e.g. PLC, PC, digital counter)

For further technical information see catalogue P-A4P011GB

Note: Order instructions in combination with basic cylinder see page 132, pos.25

Parker Hannifin Corporation
Origa Division - Europe

Tel: +45 63 12 83 00 | Email: ps@hymatik.com | www.hymatik.com | Hvidkaervej 27a, DK-5250 Odense SV, Denmark



ORIGA Pneumatic Linear Drives OSP-L

Very long lifetime and lowest leakage



A NEW Modular Linear Drive System

With this second generation linear drive Parker Origa offers design engineers complete flexibility. The well known ORIGA cylinder has been further developed into a combined linear actuator, guidance and control package. It forms the basis for the new, versatile ORIGA SYSTEM PLUS linear drive system.

All additional functions are designed into modular system components which replace the previous series of cylinders.

- Completely modular design
- Compatible with the comprehensive ORIGA OSP system component range
- High loads and moments
- Space saving
- For a wide range of loads, speeds and motion profiles

Tel: +45 63 12 83 00 | Email: ps@hymatik.com | www.hymatik.com | Hvidkaervej 27a, DK-5250 Odense SV, Denmark

Introduction – OSP Concept

Basic Linear Drive Standard Version • Series OSP-L	
Air Connection on the End-face or both at One End • Series OSP-L	
Integrated 3/2 Way Valves • Series OSP-L	
Clevis Mounting • Series OSP-L	
End Cap Mounting • Series OSP-L	
Mid-Section Support • Series OSP-L	
Inversion Mounting • Series OSP-L	

Duplex Connection • Series OSP-L	
Multiplex Connection • Series OSP-L	
Linear Guides – SLIDELINE • Series OSP-L	
Linear Guides – STARLINE • Series OSP-L	
Magnetic Switches • Series OSP-L	
Variable Stop VS • Series OSP-L with Linear Guide STL	

Options and Accessories for system versatility

Series OSP-L

STANDARD VERSIONS OSP-L25 to L63

Standard carrier with integral guidance. End cap can be rotated 4 x 90° to position air connection on any side.
Magnetic piston as standard.
Dovetail profile for mounting of accessories and the cylinder itself.



BASIC CYLINDER OPTIONS

The special design of the linear drive enables all emissions to be led away.

STAINLESS VERSION

For use in constantly damp or wet environments. All screws are A2 quality stainless steel (material no.1.4301 / 1.4303)

END-FACE AIR CONNECTION

To solve special installation problems.



BOTH AIR CONNECTIONS AT ONE END

For simplified tubing connections and space saving.



INTEGRATED VOE VALVES

The complete compact solution for optimal cylinder control.



DUPLEX CONNECTION

The duplex connection combines two OSP-L cylinders of the same size into a compact unit with high performance.



MULTIPLEX CONNECTION

The multiplex connection combines two or more OSP-L cylinders of the same size into one unit.
The orientation of the carriers can be freely selected.



ACCESSORIES

MAGNETIC SWITCHES TYPE RS, ES, RST, EST

For electrical sensing of end and intermediate piston positions.



MOUNTINGS FOR OSP-L25 TO L63

CLEVIS MOUNTING

Carrier with tolerance and parallelism compensation for driving loads supported by external linear guides.



END CAP MOUNTING

For end-mounting of the cylinder.



MID-SECTION SUPPORT

For supporting long cylinders or mounting the cylinder by its dovetail rails.



INVERSION MOUNTING

The inversion mounting transfers the driving force to the opposite side, e. g. for dirty environments.



Tel: +45 63 12 83 00 | Email: ps@hymatik.com | www.hymatik.com | Hvidkaervej 27a, DK-5250 Odense SV, Denmark

Origa System Plus
- Innovation from a proven design

The newly developed product line OSP-L can be simply and neatly integrated into any machine layout.

MOUNTING RAILS ON 3 SIDES

Mounting rails on 3 sides of the cylinder enable modular components such as linear guides, brakes, valves, magnetic switches etc. to be fitted to the cylinder itself. This solves many installation problems, especially where space is limited.

The modular system concept forms an ideal basis for additional customer-specific functions.

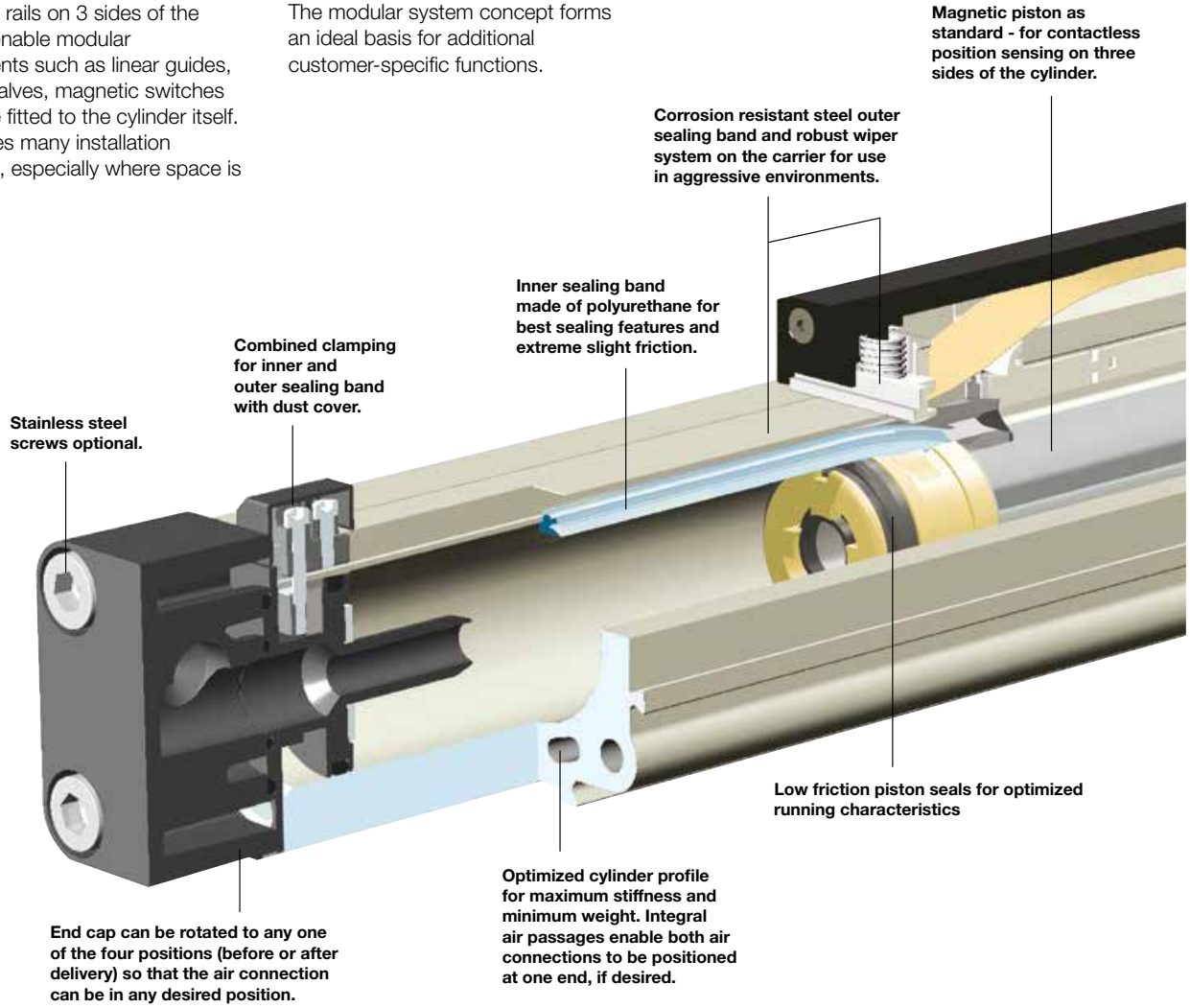

Tel: +45 63 12 83 00 | Email: ps@hymatik.com | www.hymatik.com | Hvidkaervej 27a, DK-5250 Odense SV, Denmark

SLIDELINE
Cost-effective plain bearing guide for medium loads.



STARLINE
Recirculating ball bearing guide for very high loads and precision.



VARIABLE STOP VS
The variable stop provides simple stroke limitation.



INTEGRATED VOE VALVES
The complete compact solution for optimal cylinder control.



New low profile piston/carrier design.

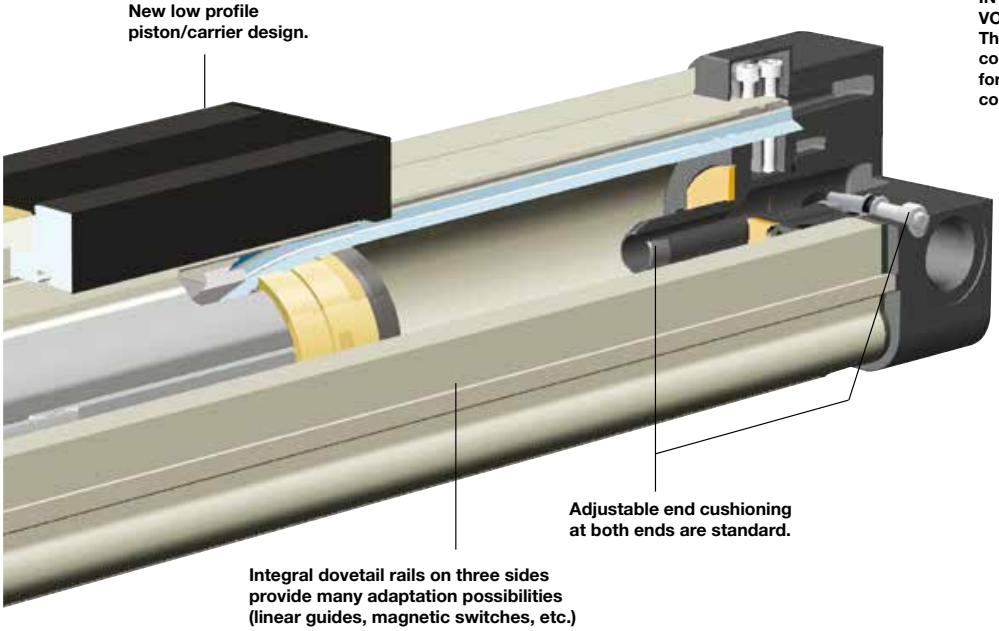

Adjustable end cushioning at both ends are standard.

Integral dovetail rails on three sides provide many adaptation possibilities (linear guides, magnetic switches, etc.)

Modular system components are simply clamped on.

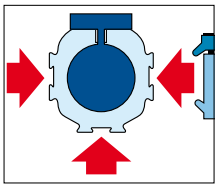

Tel: +45 63 12 83 00 | Email: ps@hymatik.com | www.hymatik.com | Hvidkaervej 27a, DK-5250 Odense SV, Denmark

OSP-L Application examples

ORIGA SYSTEM PLUS – rodless linear drives offer maximum flexibility for any application.

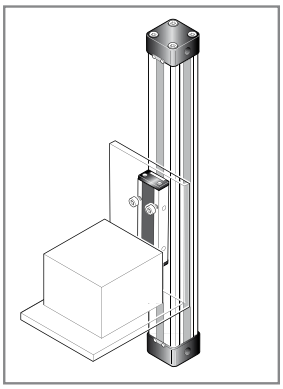

The high load capacity of the piston can cope with high bending moments without additional guides.

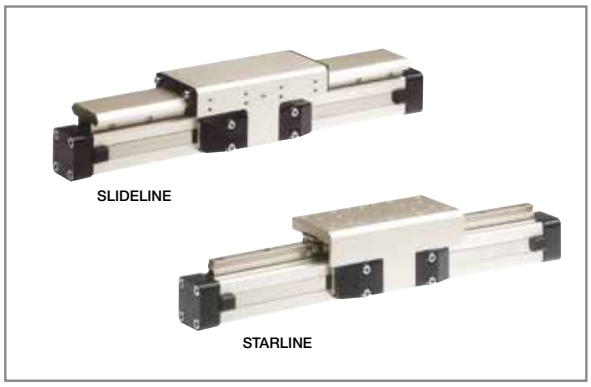

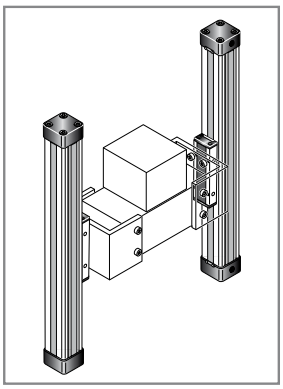

The mechanical design of the OSP-L allows synchronised movement of two cylinders.

Integrated guides offer optimal guidance for applications requiring high performance, easy assembly and maintenance free operation.

Optimal system performance by combining multi-axis cylinder combinations.

When using external guides, the clevis mounting is used to compensate for deviations in parallelism.

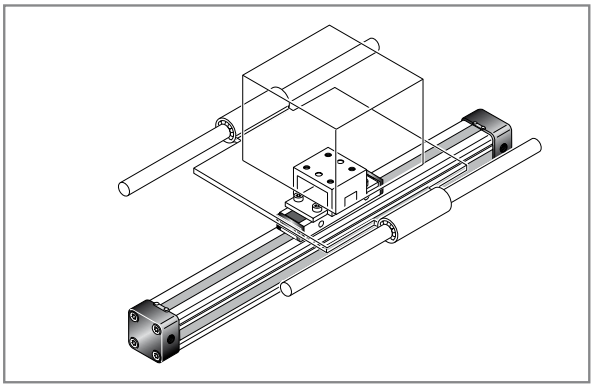

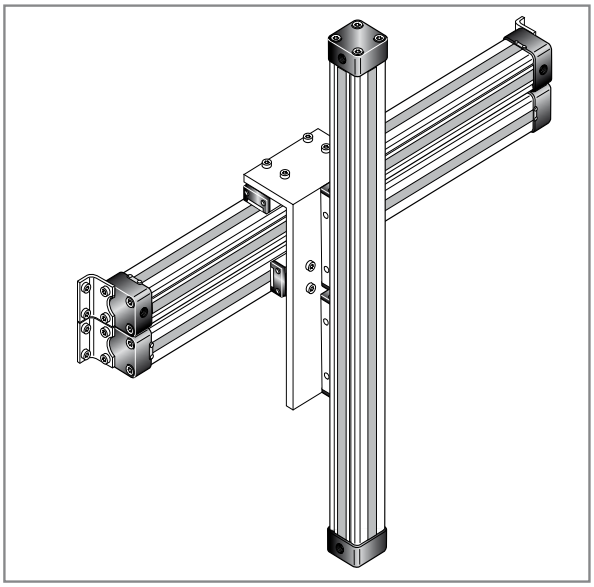

For further information and assembly instructions, please contact your local Parker Origa dealer.

Tel: +45 63 12 83 00 | Email: ps@hymatik.com | www.hymatik.com | Hvidkaervej 27a, DK-5250 Odense SV, Denmark

Rodless Pneumatic Cylinder Ø 25-63 mm

OSP ORIGA SYSTEM PLUS

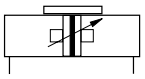



Standard Versions:

- Double-acting with adjustable end cushioning
- With magnetic piston for position sensing

Special Versions:

- Stainless steel screws
- Both air connections on one end
- Air connection on the end-face
- Integrated Valves VOE
- End cap can be rotated 4 x 90° to position air connection as desired
- Free choice of stroke length up to 6000 mm

Size Comparison

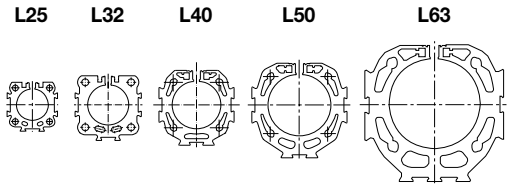

Characteristics	Description
General Features	
Type	Rodless cylinder
Series	OSP-L
System	Double-acting, with cushioning, position sensing capability
Mounting	See drawings
Air Connection	Threaded
Ambient T_{min}	-20 °C Other temperature ranges
temperature range T_{max}	+80 °C on request
Installation	In any position
Medium	Filtered, unlubricated compressed air (other media on request)
Lubrication	Permanent grease lubrication (additional oil mist lubrication not required)
Material	
Cylinder Profile	Anodized aluminium
Carrier (piston)	Anodized aluminium
End caps	Aluminium, lacquered
Sealing bands	Corrosion resistant steel (outer band) Polyurethane (inner band)
Seals	Polyurethane, NBR
Screws	Galvanized steel
	Option: stainless steel
Dust covers, wipers	Plastic
Max. operating pressure p_{max}	8 bar

Tel: +45 63 12 83 00 | Email: ps@hymatik.com | www.hymatik.com | Hvidkaervej 27a, DK-5250 Odense SV, Denmark

Loads, Forces and Moments

Choice of cylinder is decided by:

- Permissible loads, forces and moments
- Performance of the pneumatic end cushions.

The main factors here are the mass to be cushioned and the piston speed at start of cushioning (unless external cushioning is used, e. g. hydraulic shock absorbers).

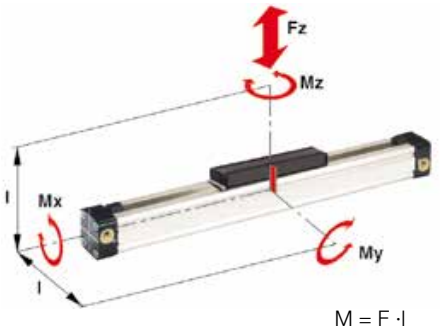

M = F ·l
Bending moments are calculated from the centre of the linear actuator

The adjacent table shows the maximum values for light, shock-free operation, which must not be exceeded even in dynamic operation. Load and moment data are based on speeds v ≤ 0.5 m/s.

When working out the action force required, it is essential to take into account the friction forces generated by the specific application or load.

Cylinder-Series Ø [mm]	Theoretical Action Force at 6 bar [N]	effektive Action Force F_A at 6 bar [N]	max. Moments Mx [Nm]	My [Nm]	Mz [Nm]	max. Load F [N]	Cushion Length [mm]
OSP-L25	295	250	1.5	15	3	300	17
OSP-L32	483	420	3	30	5	450	20
OSP-L40	754	640	6	60	8	750	27
OSP-L50		in progress					
OSP-L63							

Cushioning Diagram

Work out your expected moving mass and read off the maximum permissible speed at start of cushioning. Alternatively, take your desired speed and expected mass and find the cylinder size required.
Please note that piston speed at start of cushioning is typically ca. 50 % higher than the average speed, and that it is this higher speed which determines the choice of cylinder.

If the permitted values are exceeded, either additional shock absorbers should be fitted in the area of the centre of the gravity or you can consult us about our special cushioning system- we shall be happy to advise you on your specific application.

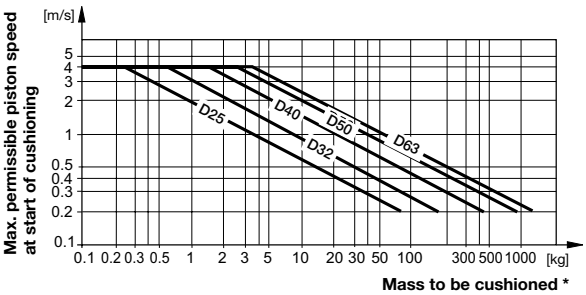

* For cylinders with linear guides or brakes, please be sure to take the mass of the carriage or the brake housing into account.

Weight (mass) [kg]

Cylinder series (Basic cylinder)	Weight (Mass) [kg] At 0 mm stroke	per 100 mm stroke
OSP-L25	0.65	0.197
OSP-L32	1.44	0.354
OSP-L40	1.95	0.415
OSP-L50	in progress	
OSP-L63		

For further technical information see catalogue P-A4P012GB

Tel: +45 63 12 83 00 | Email: ps@hymatik.com | www.hymatik.com | Hvidkaervej 27a, DK-5250 Odense SV, Denmark

Integrated 3/2 Way Valves VOE

Series OSP-L25, L32, L40 and L50

OSP ORIGA SYSTEM PLUS



For optimal control of the OSP-L cylinder, 3/2 way valves integrated into the cylinder's end caps can be used as a compact and complete solution. They allow for easy positioning of the cylinder, smooth operation at the lowest speeds and fast response, making them ideally suited for the direct control of production and automation processes.

Features:

- Complete compact solution
- Various connection possibilities:
  Free choice of air connection with rotating end caps with VOE valves, Air connection can be rotated 4 x 90°
- Solenoid can be rotated 4 x 90°,
- Pilot valve can be rotated 180°
- High piston velocities can be achieved with max. 3 exhaust ports
- Minimal installation requirements
- Requires just one air connection per valve
- Optimal control of the OSP-L cylinder
- Excellent positioning characteristics
- Integrated operation indicator
- Integrated exhaust throttle valve
- Manual override - indexed
- Adjustable end cushioning
- Easily retrofitted – please note the increase in the overall length of the cylinder!

Characteristics 3/2 Way Valves VOE

Characteristics	3/2 Way Valves with spring return			
Pneumatic diagram	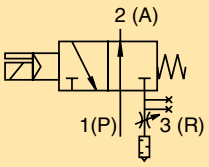		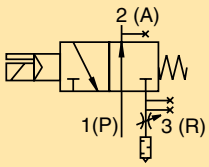	
Type	VOE-25	VOE-32	VOE-40	VOE-50
Actuation	electrical			
Basic position	P → A open, R closed			
Type	Poppet valve, non overlapping			
Mounting	integrated in end cap			
Installation	in any position			
Port size	G 1/8	G 1/4	G 3/8	G 3/8
Temperature	-10°C to +50°C *			
Operating pressure	2-8 bar			
Nominal voltage	24 V DC / 230 V AC, 50 Hz			
Power consumption	2.5 W / 6 VA			
Duty cycle	100%			
Electrical Protection	IP 65 DIN 40050			

* other temperature ranges on request

For further technical information see catalogue P-A4P012GB

Parker Hannifin Corporation
Origa Division - Europe

Tel: +45 63 12 83 00 | Email: ps@hymatik.com | www.hymatik.com | Hvidkaervej 27a, DK-5250 Odense SV, Denmark

Order Instructions- Basic Cylinder

1-4	5+6	7	8	9	10	11	12-16	17	18	19	20	21	22	23	24	25
OSPL	25	0	0	0	0	0	01100	0	0	0	0	0	0	0	0	0

Piston-Ø

25
32
40
in progress
in progress

Version / Piston

0	standard
1	Tandem

Air Connection

0	standard
1	end face
2	both at one end
3	left standard right end face
4	right standard left end face
A	3/2 Way valve VOE 24 V = Ø 25,32,40,50
B	3/2 Way valve VOE 230 V~ / 110 V= Ø 25,32,40,50
C	3/2 Way valve VOE 48 V = Ø 25,32,40,50
E	3/2 Way valve VOE 110 V~ Ø 25,32,40,50

Seals

0	standard

Lubrication

0	standard

Screws

0	standard
1	Stainless

Stroke

in mm (5 digits)

End cap position

0	l+r 0° = in front
1	l+r 90° = under-neath
2	l+r 180° = at the back
3	l+r 270° = same side as outerband
4	l 90° = underneath; r 0° = in front
5	l 180° = at the back; r 0° = in front
6	l 270° = same side as outerband; r 0° = in front
7	l 0° = in front; r 90° = underneath
8	l 180° = at the back; r 90° = underneath
9	l 270° = same side as outerband; r 90° = underneath
A	l 0° = in front; r 180° = at the back
B	l 90° = underneath; r 180° = at the back
C	l 270° = same side as outerband; r 180° = at the back
D	l 0° = in front; r 270° = same side as outerband
E	l 90° = underneath; r 270° = same side as outerband
F	l 180° = at the back; r 270° = same side as outerband

Cushioning

0	standard
1	max. length

Piston Mounting

0	without
1	clevis mounting

Guides/ Brakes/ Inversion

0	without
M	Inversion Ø 16-80
N	Duplex Ø 25,32,40,50

add. Guide Carriage

0	without

Cover / Cable Channel

0	standard
1	Cable channel
2	Cable channel two-sided

Measuring system

0	without

End cap position (air connection)

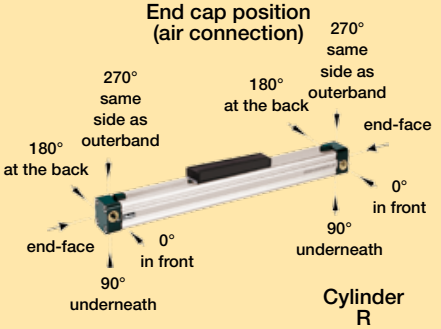

Cylinder L (left end side)

Cylinder R (right end side)

Tel: +45 63 12 83 00 | Email: ps@hymatik.com | www.hymatik.com | Hvidkaervej 27a, DK-5250 Odense SV, Denmark

Plain Bearing Guide
SLIDELINE
Series SL 25 to 63 for Linear Drive



Features:

- Anodised aluminium guide rail with prism-shaped slideway arrangement
- Adjustable plastic slide elements
- Composite sealing system with plastic and felt wiper elements to remove dirt and lubricate the slideways
- Corrosion resistant version available on request
- Any length of stroke up to 5500 mm (longer strokes on request)

Loads, Forces and Moments

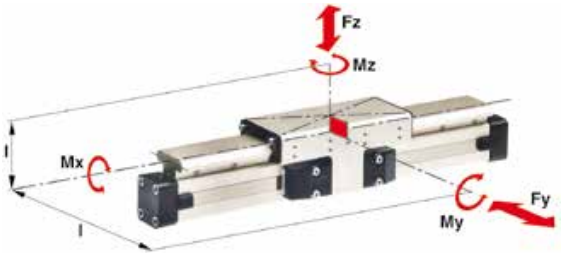

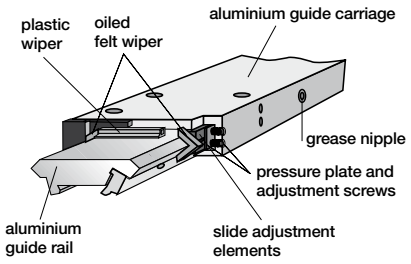

Technical Data

The table shows the maximum permissible values for smooth operation, which should not be exceeded even under dynamic conditions.

The load and moment figures apply to speeds v < 0.2 m/s.

* **Please note:**
In the cushioning diagram, add the mass of the guide carriage to the mass to be cushioned.

For further technical information see catalogue P-A4P012GB

Series SL	For linear drive	Max. moments [Nm] Mx	My	Mz	Max. loads [N] Fy,Fz	Mass of linear drive with guide [kg] with 0 mm stroke	increase per 100 mm stroke	Mass * of guide carriage [kg]	**Order No. ** SLIDELINE** [1] Guide without cylinder
SL25	OSP-L25	14	34	34	675	1.55	0.39	0.61	**20342FIL**
SL32	OSP-L32	29	60	60	925	2.98	0.65	0.95	**20196FIL**
SL40	OSP-L40	50	110	110	1600	4.05	0.78	1.22	**20343FIL**
SL50	OSP-L50	in progress							
SL63	OSP-L63								

** Please use this order pattern: Order-No. + "stroke in mm" (5 digits)
Example: SLIDELINE guide D25mm, stroke 1000mm: 20342-01000

[1] Corrosion resistant fixtures available on request

Tel: +45 63 12 83 00 | Email: ps@hymatik.com | www.hymatik.com | Hvidkaervej 27a, DK-5250 Odense SV, Denmark

Order Instructions SLIDELINE

1-4	5+6	7	8	9	10	11	12-16	17	18	19	20	21	22	23	24	25
OSPL	25	0	0	0	0	0	01100	0	0	0	0	0	0	0	0	0

Piston-Ø

25
32
40
in progress
in progress

Version / Piston

0	standard
1	Tandem

Air Connection

0	standard
1	end face
2	both at one end
3	left standard right end face
4	right standard left end face
A	3/2 Way valve VOE 24 V = Ø 25,32,40,50
B	3/2 Way valve VOE 230 V~ / 110 V= Ø 25,32,40,50
C	3/2 Way valve VOE 48 V = Ø 25,32,40,50
E	3/2 Way valve VOE 110 V~ Ø 25,32,40,50

Seals

0	standard

Lubrication

0	standard

Screws

0	standard
1	Stainless

Stroke

in mm (5 digits)

End cap position

0	l+r 0° = in front
1	l+r 90° = under-neath
2	l+r 180° = at the back
3	l+r 270° = same side as outerband
4	l 90° = underneath; r 0° = in front
5	l 180° = at the back; r 0° = in front
6	l 270° = same side as outerband; r 0° = in front
7	l 0° = in front; r 90° = underneath
8	l 180° = at the back; r 90° = underneath
9	l 270° = same side as outerband; r 90° = underneath
A	l 0° = in front; r 180° = at the back
B	l 90° = underneath; r 180° = at the back
C	l 270° = same side as outerband; r 180° = at the back
D	l 0° = in front; r 270° = same side as outerband
E	l 90° = underneath; r 270° = same side as outerband
F	l 180° = at the back; r 270° = same side as outerband

Cushioning

0	standard

Piston Mounting

0	without

Guides/ Brakes/ Inversion

0	without
2	Slideline SL Ø 25-63

add. Guide Carriage

0	without
2	Guide Carriage Slideline SL Ø 25-63

Measuring system

0	without

Cover / Cable Channel

0	standard
1	Cable channel
2	Cable channel two-sided

End cap position
(air connection)

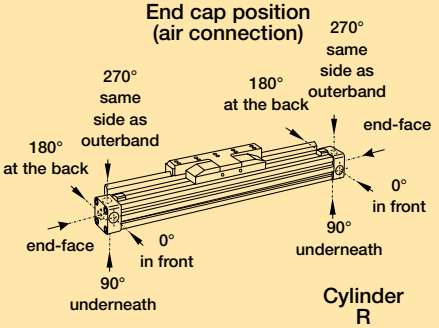

Cylinder
L
(left end side)

Cylinder
R
(right end side)

Tel: +45 63 12 83 00 | Email: ps@hymatik.com | www.hymatik.com | Hvidkaervej 27a, DK-5250 Odense SV, Denmark

Recirculating Ball Bearing Guide STARLINE

Series STL 16 to 50 for Linear Drive

OSP ORIGA SYSTEM PLUS



Features:

- Polished and hardened steel guide rail
- For very high loads in all directions
- High precision
- Integrated wiper system
- Integrated grease nipples
- Any length of stroke up to 3700 mm
- Anodized aluminium guide carriage – dimensions compatible with OSP guides SLIDELINE
- Installation height (STL25 - 32) compatible with OSP-L guides SLIDELINE
- Maximum speed
  STL25 to 50: v = 5 m/s

Loads, Forces and Moments

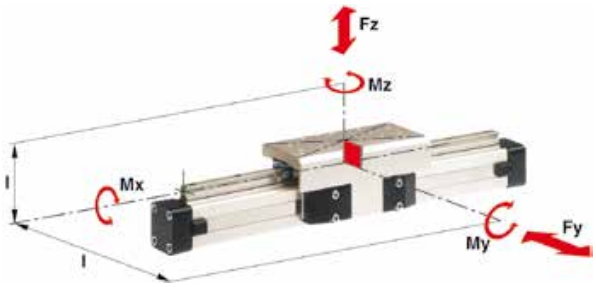

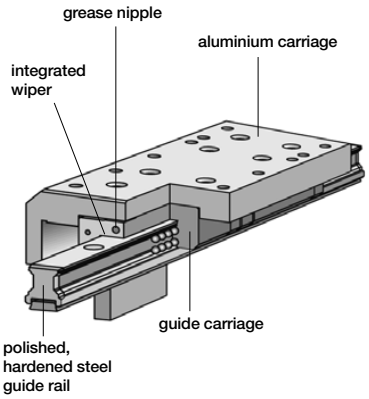

Technical Data

The table shows the maximal permissible loads. If multiple moments and forces act upon the cylinder simultaneously, the following equation applies:

$$\frac{Mx}{Mx_{max}} + \frac{My}{My_{max}} + \frac{Mz}{Mz_{max}} + \frac{Fy}{Fy_{max}} + \frac{Fz}{Fz_{max}} \leq 1$$

The sum of the loads should not exceed >1.

The table shows the maximum permissible values for light, shock-free operation, which must not be exceeded even under dynamic conditions.

For further technical information see catalogue P-A4P012GB

* **Please note:**
The mass of the carriage has to be added to the total moving mass when using the cushioning diagram

Series STL	For linear drive	Max. moments [Nm]			Max. loads [N]		Mass of linear drive with guide [kg]		Mass * of guide carriage [kg]	Order No. ** STARLINE Guide without cylinder
		Mx	My	Mz	Fy	Fz	with 0 mm stroke	increase per 100 mm stroke		
STL25	OSP-L25	50	110	110	3100	3100	1.733	0.369	0.835	**21112**
STL32	OSP-L32	62	160	160	3100	3100	2.934	0.526	1.181	**21113**
STL40	OSP-L40	150	400	400	4000	7500	4.452	0.701	1.901	**21114**
STL50	OSP-L50	in progress								

** Please use this order pattern: Order-No. + "stroke in mm" (5 digits)
Example: STARLINE guide D25mm, stroke 1000mm: 21112-01000

Tel: +45 63 12 83 00 | Email: ps@hymatik.com | www.hymatik.com | Hvidkaervej 27a, DK-5250 Odense SV, Denmark

Mid-Section Support

Mid-section supports are required from a certain stroke length to prevent excessive deflection and vibration of the linear drive. The diagrams show the maximum permissible unsupported length in relation to loading. A distinction must be drawn between loading 1 and loading 2. Deflection of 0.5 mm max. between supports is permissible.

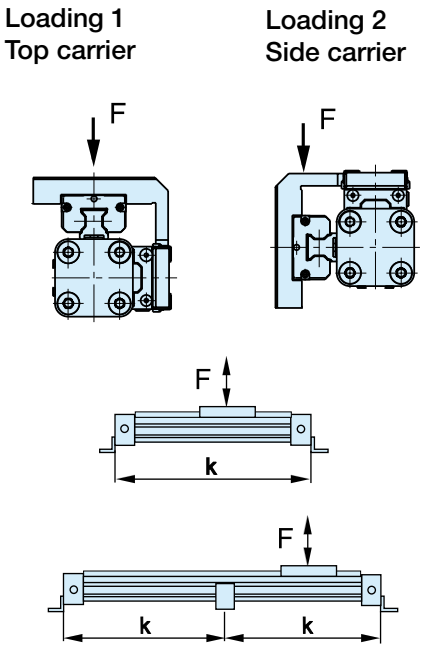

Permissible Unsupported Length STL25 to STL50

Loading 1 – Top carrier

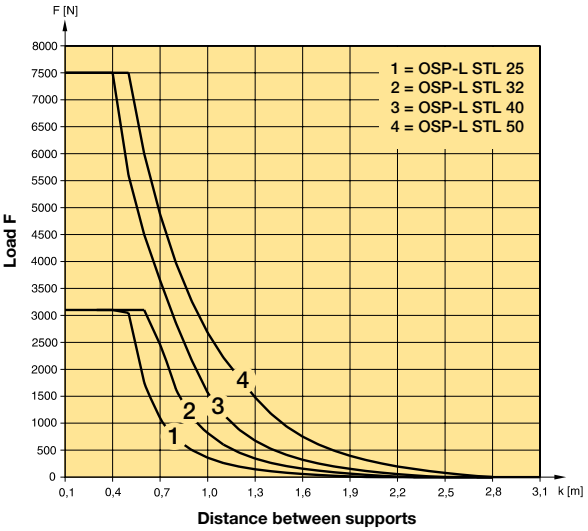

Permissible Unsupported Length STL25 to STL50

Loading 2 – Side carrier

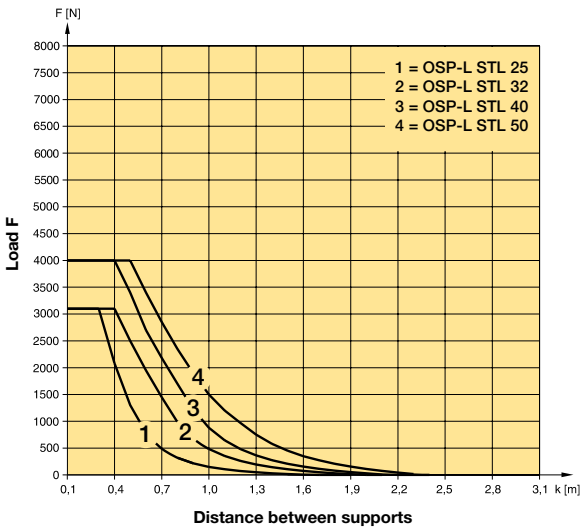

Note:
For speeds v > 0.5 m/s the distance between supports should not exceed 1 m.

Variable Stop

Type VS25 to VS50

Arrangement with two variable stops

The variable stop Type VS provides simple stroke limitation. It can be retrofitted and positioned anywhere along the stroke length.

For every cylinder diameter two types of shock absorber are available – see „Shock Absorber Selection“ below.

Mid-section supports and magnetic switches can still be fitted on the same side as the variable stop.

Depending on the application, two variable stops can be fitted if required.

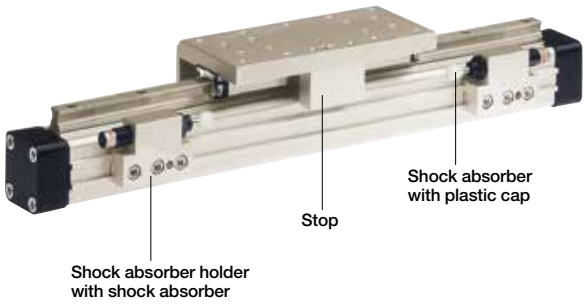

Shock Absorber Selection

The shock absorber is selected in dependence on the mass and speed.

The mass of the carrier itself must be taken into account.

Shock Absorber Selection in Dependence on Mass and Speed for Series OSP-L-STL25

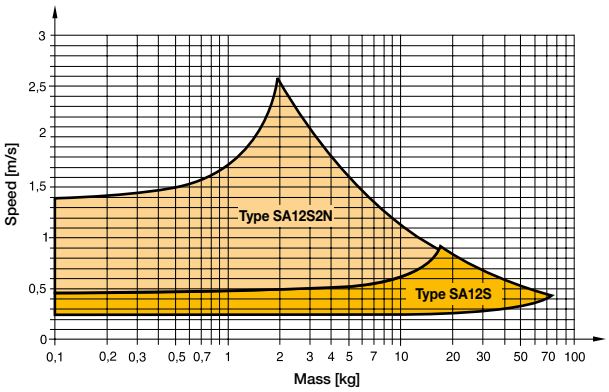

The values relate to an effective driving force of 250 N (6 bar)

Shock Absorber Selection in Dependence on Mass and Speed for Series OSP-L-STL32

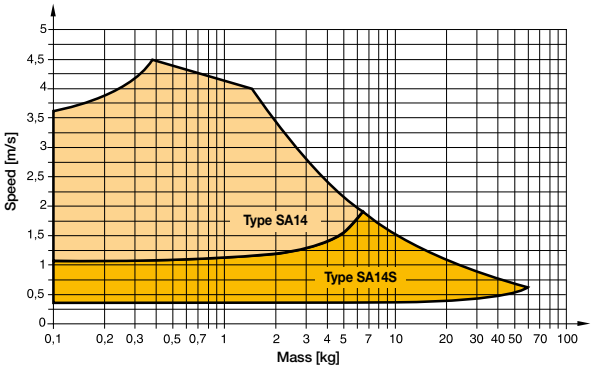

The values relate to an effective driving force of 420 N (6 bar)

Shock Absorber Selection in Dependence on Mass and Speed for Series OSP-L-STL40

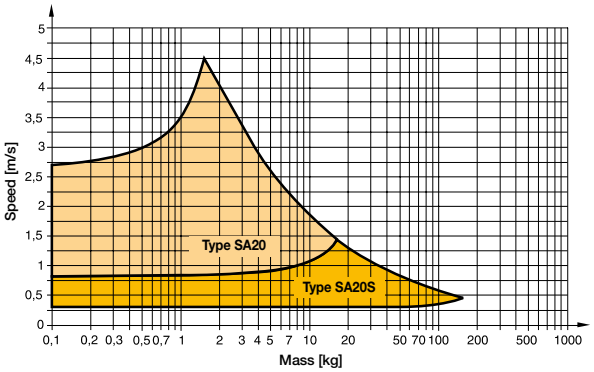

The values relate to an effective driving force of 640 N (6 bar)

Shock Absorber Selection in Dependence on Mass and Speed for Series OSP-L-STL50

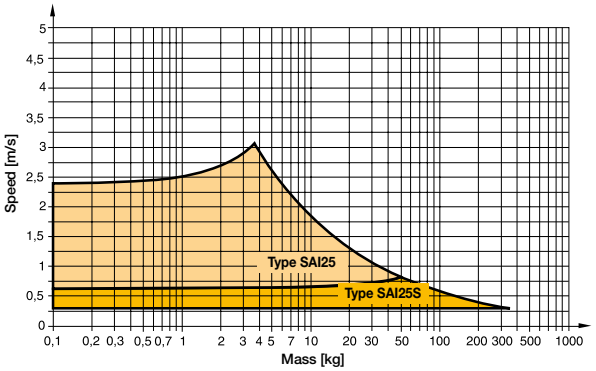

The values relate to an effective driving force of 1000 N (6 bar)

Tel: +45 63 12 83 00 | Email: ps@hymatik.com | www.hymatik.com | Hvidkaervej 27a, DK-5250 Odense SV, Denmark

Variable Stop

Type VS25 to VS50

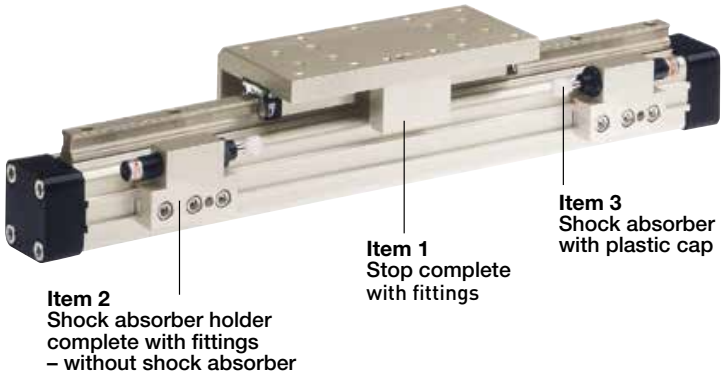

Order Instructions – Variable Stop Type VS25 to VS50 **without cylinder and without guide**

Item	Description	Size							
		VS25		VS32		VS40		VS50	
		Type	Order-No.	Type	Order-No.	Type	Order-No.	Type	Order-No.
1	Stop, complete	–	21197FIL	–	21198FIL	–	21199FIL	in progress	
2	Shock absorber holder complete	–	21202FIL	–	21203FIL	–	21204FIL		
3 *	Shock absorber, soft	SA12S2N	7723FIL	SA14	7708FIL	SA20	7710FIL		
	Shock absorber, hard	SA12S	7707FIL	SA14S	7709FIL	SA20S	7711FIL		

* Shock absorber with plastic cap

Note: Order instructions for VS in combination with the Starline **see page 177 pos.18**

For further technical information see catalogue P-A4P012GB

Tel: +45 63 12 83 00 | Email: ps@hymatik.com | www.hymatik.com | Hvidkaervej 27a, DK-5250 Odense SV, Denmark

Order Instructions - STARLINE

1-4	5+6	7	8	9	10	11	12-16	17	18	19	20	21	22	23	24	25
OSPL	25	0	0	0	0	0	01100	0	0	0	0	0	0	0	0	0

Piston-Ø

25
32
40
in progress

Version / Piston

0	standard
1	Tandem

Air Connection

0	standard
1	end face
2	both at one end
3	left standard right end face
4	right standard left end face
A	3/2 Way valve VOE 24 V = Ø 25,32,40,50
B	3/2 Way valve VOE 230 V~ / 110 V= Ø 25,32,40,50
C	3/2 Way valve VOE 48 V = Ø 25,32,40,50
E	3/2 Way valve VOE 110 V~ Ø 25,32,40,50

Lubrication

0	standard

Seals

0	standard

Screws

0	standard

Stroke

in mm (5 digits)

End cap position

0	l+r 0° = in front
1	l+r 90° = underneath
2	l+r 180° = at the back
3	l+r 270° = same side as outerband
4	l 90° = underneath; r 0° = in front
5	l 180° = at the back; r 0° = in front
6	l 270° = same side as outerband; r 0° = in front
7	l 0° = in front; r 90° = underneath
8	l 180° = at the back; r 90° = underneath
9	l 270° = same side as outerband; r 90° = underneath
A	l 0° = in front; r 180° = at the back
B	l 90° = underneath; r 180° = at the back
C	l 270° = same side as outerband; r 180° = at the back
D	l 0° = in front; r 270° = same side as outerband
E	l 90° = underneath; r 270° = same side as outerband
F	l 180° = at the back; r 270° = same side as outerband

Cushioning

0	standard
1	max. length
2	variable stop complete VS soft left for Starline
3	variable stop complete VS hard left for Starline,
4	variable stop complete VS soft right for Starline
5	variable stop complete VS hard right for Starline
6	variable stop complete VS soft both sides for Starline
7	variable stop complete VS hard both sides for Starline

Piston Mounting

0	without

Guides/ Brakes/ Inversion

0	without
B	Starline STL

add. Guide Carriage

0	without
B	Guide Carriage Starline STL

Cover / Cable Channel

0	standard
1	Cable channel
2	Cable channel two-sided

Measuring system

0	without

End cap position (air connection)

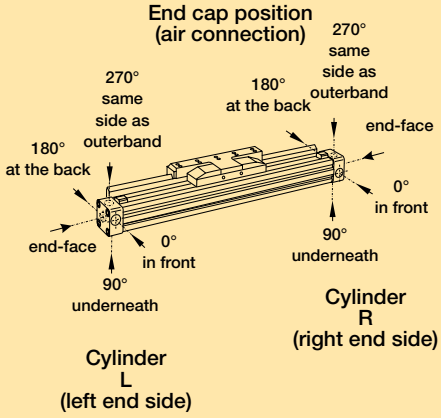

Tel: +45 63 12 83 00 | Email: ps@hymatik.com | www.hymatik.com | Hvidkaervej 27a, DK-5250 Odense SV, Denmark









Magnetically coupled pneumatic cylinder P1Z ...

No leakage, with high magnetic coupling force



The P1Z is a rodless pneumatic cylinder with piston and carriage equipped with ring magnets.

Motion is transmitted via the magnetic force locking between the piston and the carriage.

The guided version consists of a carriage fitted with 4 plain bearings, guided on 2 guide rods the design provides high rigidity, accurate guidance and a non rotating movement.

- Double acting with guide
- Magnetically coupled without mechanical connection
- Mechanical protection in case of occasional overload due to magnetic uncoupling
- Piston chamber and Slide are pressure tight
- Pressure tight and leak free system
- With adjustable pneumatic end cushioning on both sides
- Carriage is free to rotate 360° around the cylinder axis
- Air connection at one end (option)
- Position sensing:
  Al-profile rail for magnetic switches (option).
  Magnetic switches available as reed switches or as electronic sensors (option).
- Various mounting arrangements

Tel: +45 63 12 83 00 | Email: ps@hymatik.com | www.hymatik.com | Hvidkaervej 27a, DK-5250 Odense SV, Denmark

P1Z Series - Basic Version
Ø 16-40 mm

The P1Z is a rodless pneumatic cylinder. The piston and the carriage are equipped with ring magnets. The motion is transmitted via the magnetic force locking between the piston and the carriage.

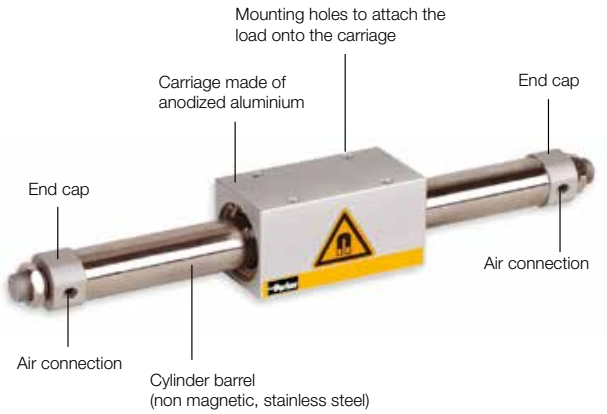

Features:

- Double acting
- Magnetically coupled without mechanical connection
- Mechanical protection in case of occasional overload due to magnetic uncoupling
- Piston chamber and carriage are pressure tight
- Pressure tight and leak free system
- Dirt and dust cannot enter
- With adjustable pneumatic end cushioning on both sides
- Carriage is free to rotate 360° around the cylinder axis
- Various mounting arrangements



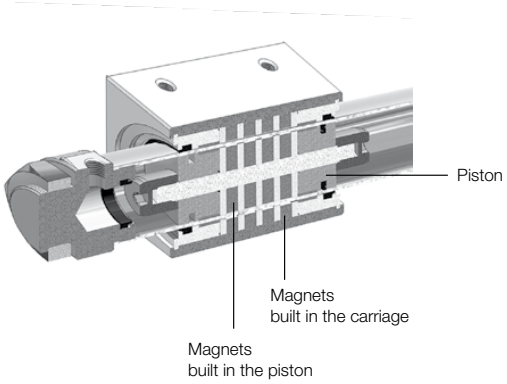

Tel: +45 63 12 83 00 | Email: ps@hymatik.com | www.hymatik.com | Hvidkaervej 27a, DK-5250 Odense SV, Denmark

Mounting and Technical Data
Basic Version

- The loads can be fitted onto the carriage by 4 tapped holes.
- The cylinder is mounted at the end caps with hexagonal nuts, flange or foot mountings.

Materials

Cylinder barrel	Stainless steel
Carriage	Al, anodised
End cap	Al, anodised
Seals	NBR



With 2 hexagonal nuts to fix the cylinder (included in scope of delivery)



Flange mounting (pair) option



Foot mounting (pair) option





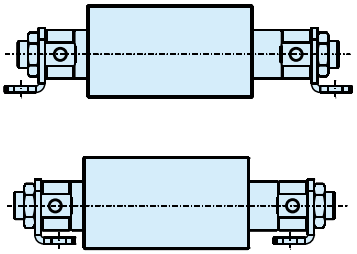

Technical Data

Piston diameter Ø [mm]	**16**	**20**	**25**	**32**	**40**
Max. stroke length [mm]	1000	1500	2000	2000	2000
Stroke tolerance [mm] up to 1000 mm	0/+1.5				
Stroke tolerance [mm] > 1000 mm	0/+2				
Temperature range [°C]	0 to 60				
Operating medium	Filtered compressed air, dry, lubricated or unlubricated * (other media on request)				
Air supply port size	M5	G1/8	G1/8	G1/8	G1/4
Max. magnetic coupling force [N]	157	236	383	703	942
Velocity range [m/s]	0.1 to 1.3				
Min. operating pressure [bar]	1.8				
Max. operating pressure [bar]	6.5	7			
Cushion length [mm]	9	15	15	12	19
Weight [kg]					
at 0 mm stroke	0.28	0.46	0.83	1.35	2.01
per 100 mm stroke	0.043	0.082	0.088	0.14	0.16

* if external lubrication is added, this must always be continued.

Parker Hannifin Corporation
Origa Division - Europe

Tel: +45 63 12 83 00 | Email: ps@hymatik.com | www.hymatik.com | Hvidkaervej 27a, DK-5250 Odense SV, Denmark

Loads, forces and moments Basic Version

If the operating conditions are outside of the permissible values, either the P1Z guided version or the P1Z in combination with an external guide should be used !

Forces [N]

Piston [mm]	16	20	25	32	40
Theoretical force at 6 bar [N]	120	188	295	483	754
Max. magnetic coupling force [N]	157	236	383	703	942

Permissible lateral force, depending on the stroke length

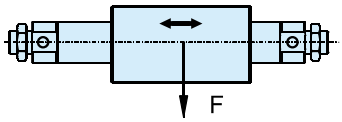

Ø [mm]	Permissible lateral force F [N]
16	30.0
20	50.0
25	70.0
32	100.0
40	165.0

The values are based on velocities v<= 0.4m/s

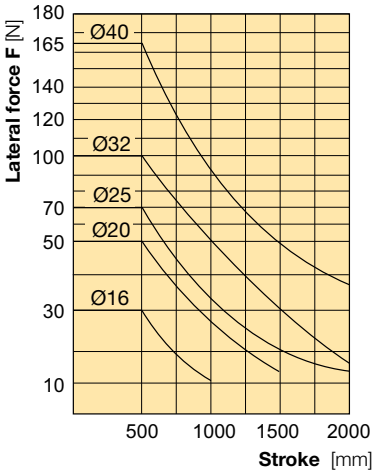

Permissible axial load, horizontal mounting

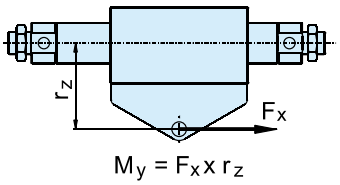

Ø [mm]	Max. Moment My [Nm]
16	1.2
20	2.5
25	3.8
32	8.5
40	13.0

Permissible axial load, vertical mounting

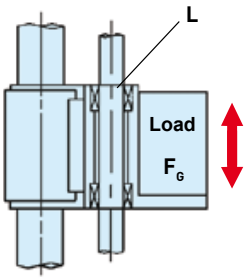

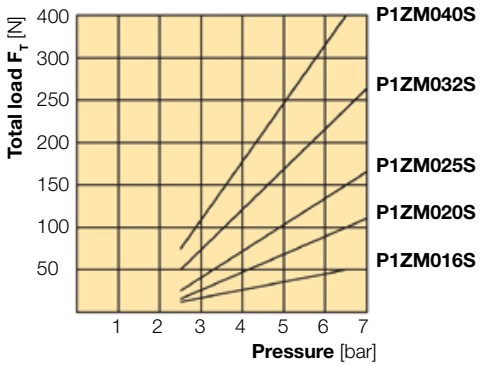

L = Weight of the external carriage
F_G = Load
F_T = Total load = Load F_G + Weight of the external carriage L + Force due to friction

Dynamic forces must not exceed the maximum magnetic coupling force!

Parker Hannifin Corporation
Origa Division - Europe

Tel: +45 63 12 83 00 | Email: ps@hymatik.com | www.hymatik.com | Hvidkaervej 27a, DK-5250 Odense SV, Denmark

Cushioning diagram

If the permitted limit values are exceeded, additional shock absorbers should be fitted in the area of the centre of gravity.

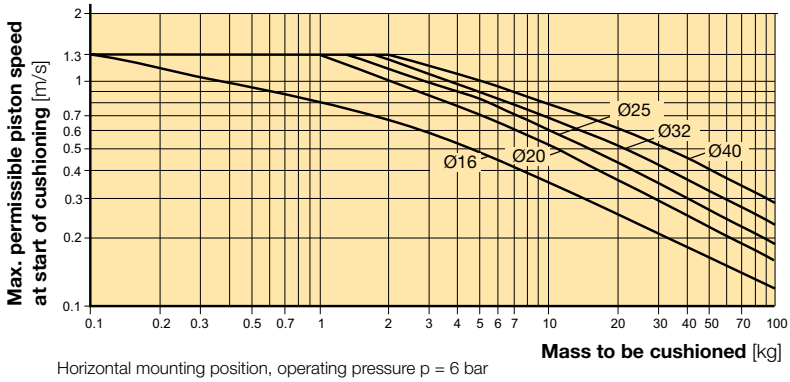

Horizontal mounting position, operating pressure p = 6 bar

Installation tips for use with external guides

When stopping a load having a large inertia force at the stroke end, tilting of the carriage and damage to the bearings and cylinder barrel may occur (fig. left).

To prevent this, the force transmission should be realized at the middle axis of the cylinder.

The combination of the shock absorber with an end stop, can help to prevent the tilting of the carriage (fig. right).

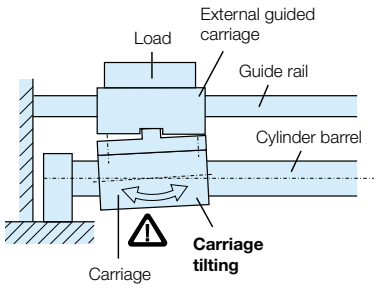

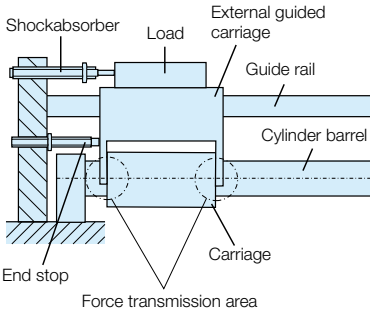

Parker Hannifin Corporation
Origa Division - Europe

Tel: +45 63 12 83 00 | Email: ps@hymatik.com | www.hymatik.com | Hvidkaervej 27a, DK-5250 Odense SV, Denmark

Order Instructions - Basic Cylinder - Series P1Z

Basic cylinder (15 digits)															With option (18 digits)		
P	1	Z	M	0	1	6	S	A	N	0	8	5	0	W	F	M	N

Piston diameter	
016	Ø 16 mm
020	Ø 20 mm
025	Ø 25 mm
032	Ø 32 mm
040	Ø 40 mm

Options	
B	without
W	with

End of stroke cushioning	
A	Pneumatically adjustable (Ø 16, 20, 25, 32 and 40 mm)

Mountings	
N	without
F	Foot mounting
L	Flange mounting

Stroke length	
max. stroke [mm]	**Piston Ø [mm]**
1000	Ø 16
1500	Ø 20
2000	Ø 25
2000	Ø 32
2000	Ø 40

Air supply port type	
M	Metric thread (Ø 16 mm)
B	G-thread (Ø 20 - 40 mm)
(Other types on request)	

Order code examples:

- **P1ZM016SAN0100B** Ø 16 mm, stroke 100 mm, supplied with hexagonal nuts on each end cap.
- **P1ZM020SAN1000WFBN** Ø 20 mm, stroke 1000 mm, with foot mounting at both end caps.

For further technical information see catalogue P-A4P019GB

Tel: +45 63 12 83 00 | Email: ps@hymatik.com | www.hymatik.com | Hvidkaervej 27a, DK-5250 Odense SV, Denmark

P1Z Series - Guided Version
Ø 16-40 mm

The P1Z is a rodless pneumatic cylinder with guide. The piston and the guide carriage are equipped with ring magnets.

The motion is transmitted via the magnetic force between the piston and the guide carriage.

The guided version consists of a carriage fitted with 4 plain bearings, guided on 2 guide rods. The design provides high rigidity, accurate guidance and a non rotating movement.

Features:

- Double acting with guide
- Magnetically coupled without mechanical connection
- Mechanical protection in case of occasional overload due to magnetic uncoupling
- Piston chamber and Slide are pressure tight
- Pressure tight and leak free system
- Air connection at one end (option)
- End of stroke cushioning:
  with elastomeric bumpers (standard),
  with hydraulic shock absorbers (option)
- Position sensing:
  Al-profile rail for magnetic switches (option).
  Magnetic switches available as reed switches or as electronic sensors (option).

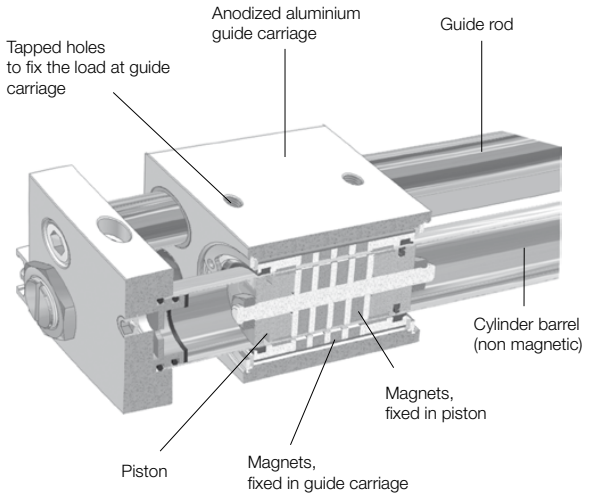

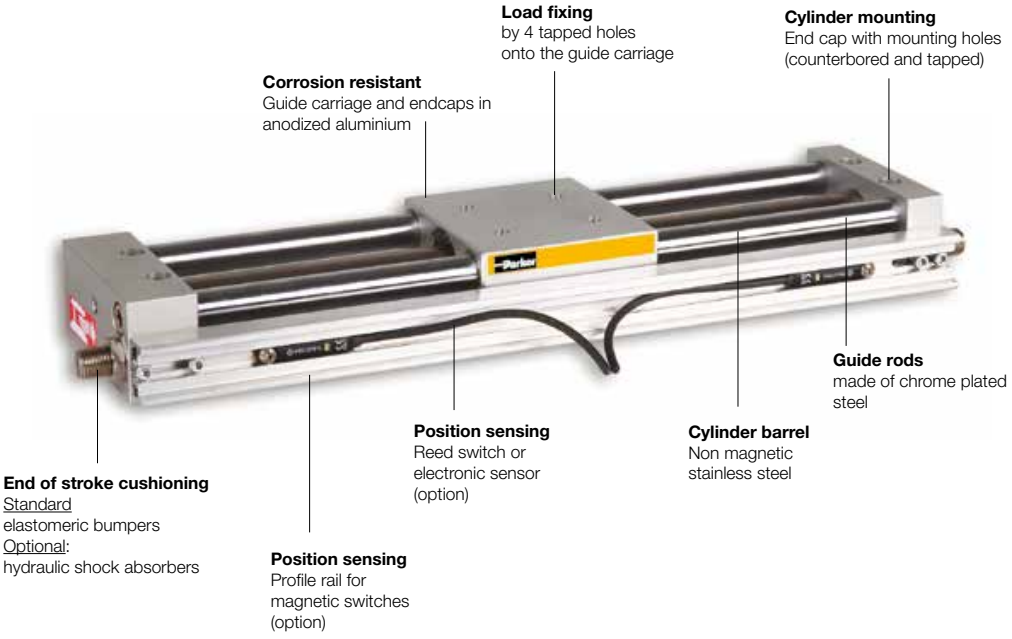

Tel: +45 63 12 83 00 | Email: ps@hymatik.com | www.hymatik.com | Hvidkaervej 27a, DK-5250 Odense SV, Denmark

Guided Version
Ø 16 - 40 mm

Air connection



Guided version P1Z and air connection on both sides (standard)



Guided version P1Z and air connection at one end (option)

End of stroke cushioning

The end of stroke cushioning for light loads is provided by elastomeric bumpers (standard).

For medium and heavy loads hydraulic shock absorbers should be used (option).



Guided version P1Z and elastomeric bumpers (standard)



Guided version P1Z and hydraulic shock absorbers (option)

Position sensing

The guide carriage is fitted with a magnet for position sensing (standard)

An Al-profile rail for magnetic switches is available as an option. The rail is located on the same side as the elastomeric bumpers or the shock absorbers.

Reed switches or electronic sensors in several versions can be moved in the profile rail along the entire stroke length.



Guided version P1Z with magnet in the guide carriage for position sensing (standard).



Guided version P1Z and Al-profile rail for magnetic switches (option).



Guided version P1Z and Al-profile rail with 2 magnetic switches (option).

Parker Hannifin Corporation
Origa Division - Europe

Tel: +45 63 12 83 00 | Email: ps@hymatik.com | www.hymatik.com | Hvidkaervej 27a, DK-5250 Odense SV, Denmark

Mounting and Technical Data
Guided Version

The loads can be fixed onto the guide carriage by 4 tapped holes.

Cylinder mounting provided with 4 tapped and counterbored holes. Additional mountings are not required.

Materials

Cylinder barrel	Stainless steel
Carriage	Al, anodised
End cap	Al, anodised
Seals	NBR
Guide rods	Steel, chrome plated

Technical Data

Piston diameter Ø [mm]	**16**	**20**	**25**	**32**	**40**
Max. stroke length [mm]	750	1000	1500	1500	1500
Stroke tolerance [mm] up to 1000 mm	0/+1.5				
Stroke tolerance [mm] > 1000 mm	0/+2				
Temperature range [°C]	0 to 60				
Operating medium	Filtered compressed air, dry, lubricated or unlubricated * (other media on request)				
Air supply port size	M5	G1/8	G1/8	G1/8	G1/4
Max. magnetic coupling force [N]	157	236	383	703	942
Velocity range [m/s]	0.5 to 0.4				
Min. operating pressure [bar]	2.3	2			
Max. operating pressure [bar]	6.5	7			
Weight [kg]					
at 0 mm stroke	0.9	1.52	1.70	3.63	5.44
per 100 mm stroke	0.2	0.33	0.42	0.53	0.86

* if external lubrication is added, this must always be continued.

Parker Hannifin Corporation
Origa Division - Europe

Tel: +45 63 12 83 00 | Email: ps@hymatik.com | www.hymatik.com | Hvidkaervej 27a, DK-5250 Odense SV, Denmark

Loads, forces and moments Guided Version

Forces [N]

Piston [mm]	16	20	25	32	40
Theoretical force at 6 bar [N]	120	188	295	483	754
Max. magnetic coupling force [N]	157	236	383	703	942

Permissible lateral force, depending on the stroke length

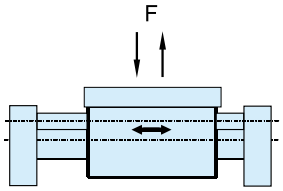

Ø [mm]	Max. Moment M_x [Nm]	Max. Moment M_y [Nm]	Max. Moment M_z [Nm]
16	0.5	2.4	2.4
20	1.0	5.0	5.0
25	1.8	9.5	9.5
32	3.0	15.0	15.0
40	4.5	24.0	24.0

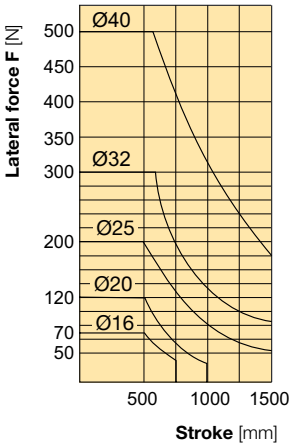

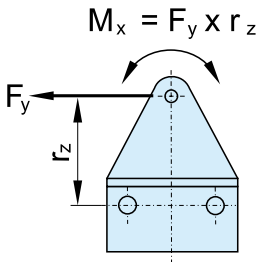

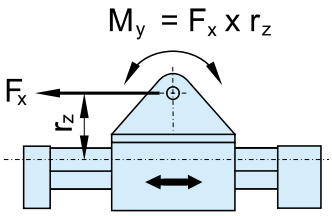

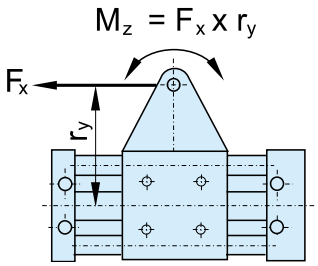

Permissible moment M_x depending on the stroke length

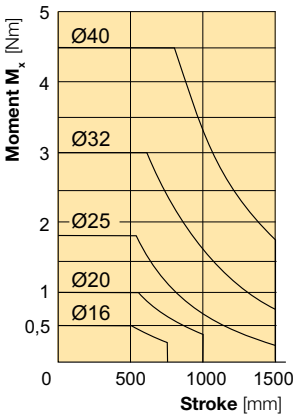

Dynamic forces must not exceed the maximum magnetic coupling force!

Tel: +45 63 12 83 00 | Email: ps@hymatik.com | www.hymatik.com | Hvidkaervej 27a, DK-5250 Odense SV, Denmark

Permissible axial load, vertical mounting

For vertical applications please refer to the values in the diagrams !

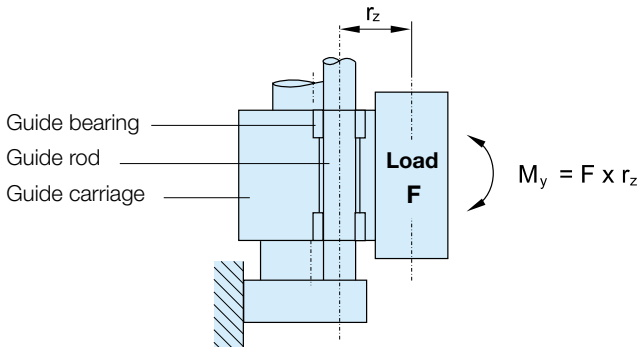

Cylinder Ø 16, 25, 40

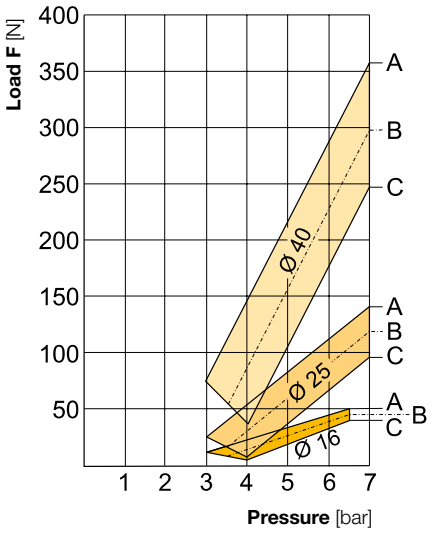

Cylinder Ø 20, 32

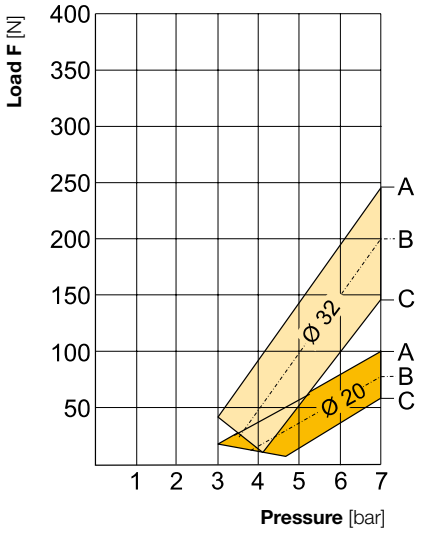

Ø [mm]	Max. Load F [N]	B Max. Moment M_y / 2 [Nm]	C Max. Moment M_y [Nm]
16	50.0	1.2	2.4
20	100.0	2.5	5.0
25	140.0	4.75	9.5
32	240.0	7.5	15.0
40	360.0	12.0	24.0

A = curve at moment $M_y = 0$

B = curve at moment $M_y/2$ = see **column B**

C = curve at moment $M_{y\,max.}$ = see **column C**

Parker Hannifin Corporation
Origa Division - Europe

Tel: +45 63 12 83 00 | Email: ps@hymatik.com | www.hymatik.com | Hvidkaervej 27a, DK-5250 Odense SV, Denmark

Order Instructions - Guided version

Basic cylinder (15 digits)															With option (18 digits)		
P	1	Z	M	0	1	6	T	C	N	0	8	5	0	W	N	M	L

Piston diameter	
016	Ø 16 mm
020	Ø 20 mm
025	Ø 25 mm
032	Ø 32 mm
040	Ø 40 mm

Options	
B	without
W	with

Version	
G	Guided version and air connection on both sides
T	Guided version and air connection at one end

Air supply port type	
M	Metric thread (Ø 16 mm)
B	G-thread (Ø 20 - 40 mm)
(Other types on request)	

End of stroke cushioning	
C	with elastomeric bumpers
H	with two hydraulic shock absorbers

Position sensing	
N	without
L	Al-profile without magnetic switch
S	2 Reed switches, 0.3 m with M8 connector, snap in
C	2 Reed switches, 3 m flying leads
K	2 Electronic sensors PNP 0.3 m with M8 connector, snap in
H	2 Electronic sensors PNP 3 m flying leads

Stroke length	
max. stroke [mm]	piston Ø [mm]
750	Ø 16
1000	Ø 20
1500	Ø 25
1500	Ø 32
1500	Ø 40

Order code examples:

- P1ZM016TCN0100B Cylinder guided version -Ø 16 mm, stroke 100 mm, with air connection at one end and elastomeric bumpers.

- P1ZM020GHN1000WNBL Cylinder guided version -Ø 20 mm, stroke 1000 mm, with air connection on both sides, with two hydraulic shock absorbers and profile rail for magnetic switches.

For further technical information see catalogue P-A4P019GB

PDE2600PNUK

Parker Pneumatic

Force Guide

Cylinder bore mm	Series		Stroke	Bore mm	Piston rod mm	Area cm²	Max theoretical force in N 1.0 bar	2.0 bar	3.0 bar	4.0 bar	5.0 bar	6.0 bar	7.0 bar	8.0 bar	9.0 bar	10.0 bar
10/4	**P1A**	Double acting	+	10	4	0.8	8	15	23	31	39	**46**	54	62	69	77
	P1S		-	10	4	0.7	6	13	19	26	32	**39**	45	52	58	65
12/5	**C05**	Double acting	+	12	5	1.1	11	22	33	44	55	**67**	78	89	100	111
			-	12	5	0.9	9	18	28	37	46	**55**	64	73	83	92
12/6	**P1A**	Double acting	+	12	6	1.1	11	22	33	44	55	**67**	78	89	100	111
	P1Q		-	12	6	0.8	8	17	25	33	42	**50**	58	67	75	83
	P1S															
16/6	**P1A**	Double acting	+	16	6	2.0	20	39	59	79	99	**118**	138	158	178	197
	P1S		-	16	6	1.7	17	34	51	68	85	**102**	119	136	153	170
16/8	**P1Q**	Double acting	+	16	8	2.0	20	39	59	79	99	**118**	138	158	178	197
			-	16	8	1.5	15	30	44	59	74	**89**	104	118	133	148
20/8	**P1A**	Double acting	+	20	8	3.1	31	62	92	123	154	**185**	216	247	277	308
	P1S		-	20	8	2.6	26	52	78	104	129	**155**	181	207	233	259
20/10	**C05**	Double acting	+	20	10	3.1	31	62	92	123	154	**185**	216	247	277	308
	P1Q		-	20	10	2.4	23	46	69	92	116	**139**	162	185	208	231
	P5T															
25/10	**P1A**	Double acting	+	25	10	4.9	48	96	144	193	241	**289**	337	385	433	482
	P1Q		-	25	10	4.1	40	81	121	162	202	**243**	283	324	364	405
	P1S															
	P5T															
32/12	**C05**	Double acting	+	32	12	8.0	79	158	237	316	394	**473**	552	631	710	789
	P1D		-	32	12	6.9	68	136	203	271	339	**407**	475	542	610	678
	P1P															
	P1Q															
	P1S															
	P1D-B		+	32	12	8.0	80	161	241	322	402	**483**	563	643	724	804
	P1D-C		-	32	12	6.9	69	138	207	276	346	**415**	484	553	622	691
	P1D-X															
32/16	**P5T**	Double acting	+	32	16	8.0	79	158	237	316	394	**473**	552	631	710	789
			-	32	16	6.0	59	118	178	237	296	**355**	414	473	533	592
40/16	**P1D**	Double acting	+	40	16	12,6	126	251	377	503	628	**754**	880	1005	1131	1257
	P1D-C		-	40	16	10,6	106	212	318	424	530	**636**	742	848	954	1060
40/12	**P1P**	Double acting	+	40	12	12.6	123	247	370	493	616	**740**	863	986	1109	1233
			-	40	12	11.4	112	224	337	449	561	**673**	785	897	1010	1122
40/16	**P1Q**	Double acting	+	40	16	12.6	123	247	370	493	616	**740**	863	986	1109	1233
			-	40	16	10.6	104	207	311	414	518	**621**	725	828	932	1036
	P1D-B		+	40	16	12,6	126	251	377	503	628	**754**	880	1005	1131	1257
	P1D-C		-	40	16	10,6	106	212	318	424	530	**636**	742	848	954	1060
	P1D-X															
50/16	**C05**	Double acting	+	50	16	19.6	193	385	578	770	963	**1156**	1348	1541	1734	1926
	P1P		-	50	16	17.6	173	346	519	692	865	**1037**	1210	1383	1556	1729
50/20	**P1D**	Double acting	+	50	20	19.6	193	385	578	770	963	**1156**	1348	1541	1734	1926
	P1Q		-	50	20	16.5	162	324	485	647	809	**971**	1133	1295	1456	1618
	P1S															
	P5T															
	P1D-B		+	50	20	19,6	196	393	589	785	982	**1178**	1374	1571	1767	1963
	P1D-C		-	50	20	16,5	165	330	495	660	825	**990**	1155	1319	1484	1649
	P1D-X															

Cylinder bore mm		Series	Stroke	Bore mm	Piston rod mm	Area cm²	Max theoretical force in N 1.0 bar	2.0 bar	3.0 bar	4.0 bar	5.0 bar	6.0 bar	7.0 bar	8.0 bar	9.0 bar	10.0 bar
63/16	**C05**	Double acting	+	63	16	31.2	306	612	917	1223	1529	**1835**	2141	2446	2752	3058
	P1P		-	63	16	29.2	286	572	858	1144	1430	**1717**	2003	2289	2575	2861
63/20	**P1D**	Double acting	+	63	20	31.2	306	612	917	1223	1529	**1835**	2141	2446	2752	3058
	P1Q		-	63	20	28.0	275	550	825	1100	1375	**1650**	1925	2200	2475	2750
	P1S															
	P5T															
	P1D-B		+	63	20	31,2	312	623	935	1247	1559	**1870**	2182	2494	2806	3117
	P1D-C		-	63	20	28,0	280	561	841	1121	1402	**1682**	1962	2242	2523	2803
	P1D-X															
80/25	**P1D**	Double acting	+	80	25	50.3	493	986	1479	1972	2466	**2959**	3452	3945	4438	4931
	P1Q		-	80	25	45.4	445	890	1335	1780	2225	**2670**	3115	3560	4005	4450
	P1S															
	P5T															
	P1D-B		+	80	25	50,3	503	1005	1508	2011	2513	**3016**	3519	4021	4524	5027
	P1D-C		-	80	25	45,4	454	907	1361	1814	2268	**2721**	3175	3629	4082	4536
	P1D-X															
84/20	**C0D300**	Double acting	+	84	20	55.4	544	1087	1631	2175	2718	**3262**	3806	4349	4893	5436
			-	84	20	52.3	513	1026	1539	2051	2564	**3077**	3590	4103	4616	5128
100/25	**P1D**	Double acting	+	100	25	78.5	770	1541	2311	3082	3852	**4623**	5393	6164	6934	7705
	P1Q		-	100	25	73.6	722	1445	2167	2889	3612	**4334**	5056	5779	6501	7223
	P1S															
	P5T															
	P1D-B		+	100	25	78,5	785	1571	2356	3142	3927	**4712**	5498	6283	7069	7854
	P1D-C		-	100	25	73,6	736	1473	2209	2945	3682	**4418**	5154	5890	6627	7363
	P1D-X															
114/20	**C0D600**	Double acting	+	114	20	101.9	1000	2000	3000	4000	5000	**6000**	7001	8001	9001	10001
			-	114	20	98.8	969	1939	2908	3877	4846	**5816**	6785	7754	8724	9693
125/32	**P1D**	Double acting	+	125	32	122.7	1204	2408	3612	4815	6019	**7223**	8427	9631	10835	12039
	P1S		-	125	32	114.7	1125	2250	3375	4500	5625	**6750**	7875	9000	10125	11250
	P1D-B		+	125	32	122,7	1227	2454	3682	4909	6136	**7363**	8590	9817	11045	12272
	P1D-C		-	125	32	114,7	1147	2294	3440	4587	5734	**6881**	8027	9174	10321	11468
	P1D-X															
161/25	**C0D1200**	Double acting	+	161	25	203.9	2000	4000	6000	8000	10000	**12000**	14000	16000	18000	20000
			-	161	25	199.0	1952	3904	5856	7808	9759	**11711**	13663	15615	17567	19519
160/40	**P1E**	Double acting	+	160	40	201.1	1972	3945	5917	7890	9862	**11835**	13807	15779	17752	19724
	P1D-T		+	160	40	201,0	2010	4019	6029	8038	10048	**12058**	14067	16077	18086	20096
			-	160	40	188,4	1884	3768	5652	7536	9420	**11304**	13188	15072	16956	18840
200/40	**P1E**	Double acting	+	200	40	314.2	3082	6164	9246	12328	15410	**18491**	21573	24655	27737	30819
200/50	**P1D-T**		+	200	50	314,2	3142	6283	9425	12566	15708	**18850**	21991	25133	28274	31416
			-	200	50	294,5	2945	5891	8836	11781	14727	**17672**	20617	23562	26508	29453
250/28	**C0P2500**	Double acting	+	250	28	490.9	4815	9631	14446	19262	24077	**28893**	33708	38524	43339	48155
			-	250	28	484.7	4755	9510	14265	19020	23776	**28531**	33286	38041	42796	47551
250/50	**P1D-T**		+	250	50	490,9	4909	9818	14726	19635	24544	**29453**	34362	39270	44179	49088
			-	250	50	471,3	4713	9425	14138	18850	23563	**28275**	32988	37700	42413	47125
320/63	**P1D-T**		+	320	63	804,25	8043	16085	24128	32170	40213	**48255**	56298	64340	72383	80425
			-	320	63	773,1	7731	15462	23192	30923	38654	**46385**	54116	61846	69577	77308

+ = Outward stroke
- = Return stroke

Note!
Select a theoretical force 50-100% larger than the force required

The Force Guide is only for double acting cylinders, please look into the technical catalogue for every individual sigle acting cylinder to see the forces.

Note! For all single acting cylinders you have to reduce the force in the table with the spring force to get the theoretical force.
The spring force is not calculted to create any work, it is only to take the piston rod into the cylinder.

Tel: +45 63 12 83 00 | Email: ps@hymatik.com | www.hymatik.com | Hvidkaervej 27a, DK-5250 Odense SV, Denmark











Handling Products









Handling Products

Comprising an innovative range of Universal Grippers, Rotary Actuators and Precision Slide Tables



Parker is about motion control engineering, manufacturing, application expertise and unparalleled customer service.

Parker automation products are found just about everywhere — from laboratories, cleanrooms and factory floors, to mines, foundries and satellites in space – our products are used anywhere machines, processes and people depend on reliable high-performance motion control.

Today's industrial automation applications demand the best in quality and productivity. Likewise, high-technology automation applications demand performance in quality throughput and precision.

P5GA - Angular double acting, square jaw carriers

The P5GA is a compact angular gripper with a closed angle of -10° and an open angle of +30°. With double acting mechanism the gripper is suitable for internal or external gripping applications. For flexible installation mounting is available on three sides and the anodised body has recessed sensor grooves.

- Bore sizes Ø12, 16, 20, 25 and 32mm
- Double acting
- Anodised corrosion protection
- Magnetic piston as standard
- Optional sensors



Technical Information

Acting type		Double acting				
Bore (mm)		12	16	20	25	32
Port size		M3 x 0.5		M5 x 0.8		
Medium		Air				
Operating pressure range		1.5 - 7 bar				
Temperature range		-5 to +60°C (no freezing)				
Max frequency		180 Cycles/min				
Lubrication Lever	Cylinder Grease	Not required				
Max. arm length mm (L)		30	40	60	70	85
Theoretical holding force kgf-cm						
	Closed side	0.4xP	0.9xP	1.7xP	3.4xP	6.1xP
	Opened side	0.5xP	1.2xP	2.3xP	4.4xP	8.1xP
Clamp / Release angle		-10 to +30°				
Clamping force (F)		F = M / L x 0.85				
Weight (g)		53	103	193	327	525

L : Arm length (mm), M : Theoretical moment (kgf-cm)
F : Clamping force (kgf), P : Operating pressure (kgf/cm²)

For more information see www.parker.com/euro_pneumatic

P5GA - Angular Grippers

Bore mm	Order code
12	**P5GA-012MSG030B**
16	**P5GA-016MSG030B**
20	**P5GA-020MSG030B**
25	**P5GA-025MSG030B**
32	**P5GA-032MSG030B**

Length of gripping point

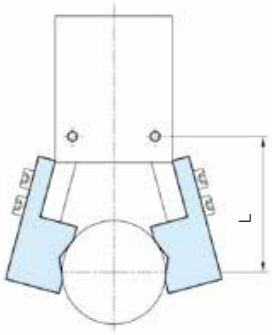

Installation of sensor

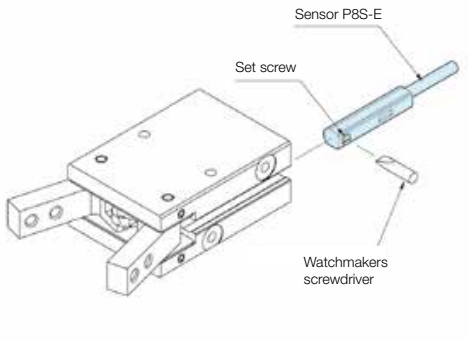

Sensors - Series P8S-E

Magnetic Sensor	M8 - Snap in	Flying lead
		
	0.165 m PUR cable with M8 connector	2 m PUR cable
PNP	**P8S-EPSUS**	**P8S-EPFXS**
NPN	**P8S-ENSUS**	**P8S-ENFXS**
Reed	**P8S-ERSUS**	**P8S-ERFXS**

Parker Hannifin Corporation
Pneumatic Division - Europe

Tel: +45 63 12 83 00 | Email: ps@hymatik.com | www.hymatik.com | Hvidkaervej 27a, DK-5250 Odense SV, Denmark

Dimensions (mm)

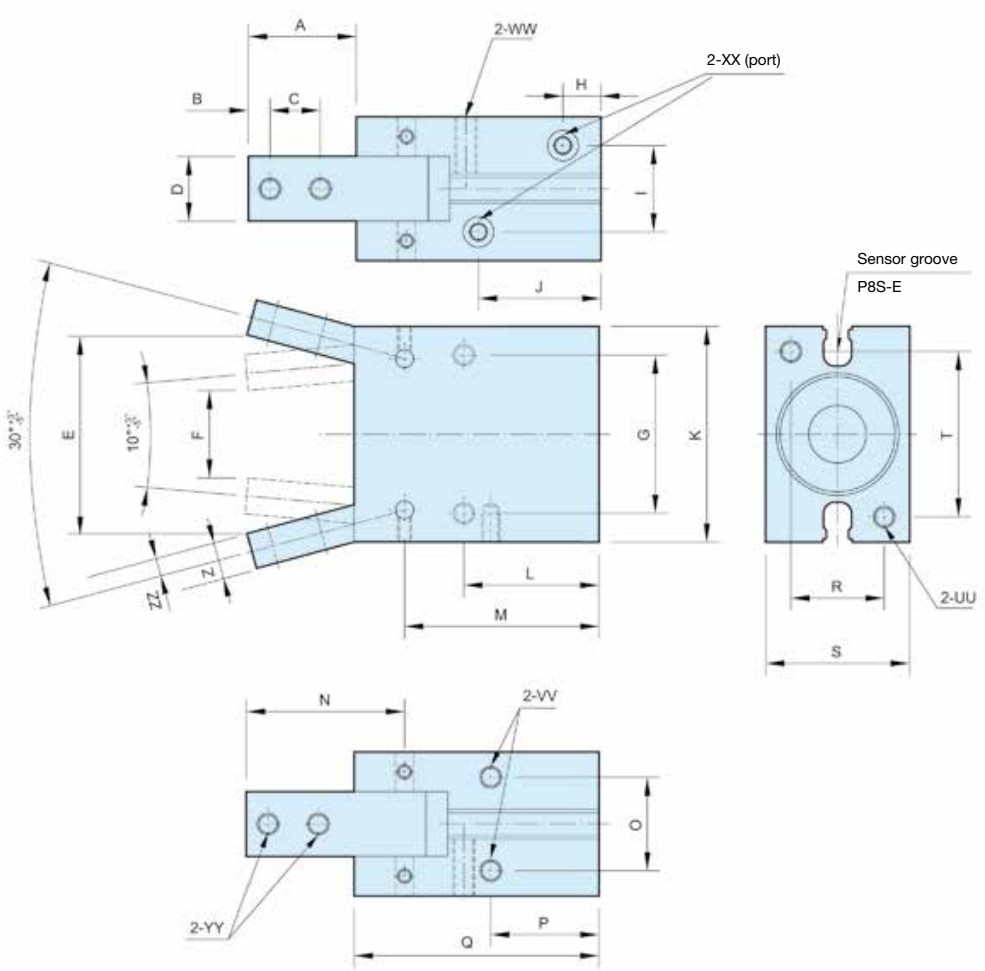

Bore mm	A	B	C	D 0/-0.03	E	F	G	H	I	J	K	L	M	N	O	P	Q	R	S	T
12	15,4	3	6	7	26,3	9	20	7,5	10,2	23,5	28	20	32,9	21,5	10,2	16	39	10	16	22
16	17,5	3	8	9	31,1	14	24	7,5	12	22	34	22,5	35	25	14	18	42,5	14	22	26
20	22	4	10	12	40,1	18	30	8	13	25	45	25	39,5	32,5	16	19	50	16	26	35
25	26	5	12	14	47,9	21	36	8,5	18	28	52	28,5	45,5	38,5	20	21,5	58	20	32	40
32	30	6	14	18	55,1	24	44	10,5	24	34	60	37,5	54	44	26	30	68	26	40	46

Bore mm	UU	VV	WW	XX	YY	Z	ZZ
12	M3 x 5 depth	M3 x 5 depth	M3 x 5 depth	M3 x 5 depth	M3	5	2,5
16	M4 x 7 depth	M4 x 7 depth	M4 x 7 depth	M5 x 5 depth	M3	6	3
20	M5 x 8 depth	M5 x 8 depth	M5 x 8 depth	M5 x 5 depth	M4	7	3,5
25	M6 x 10 depth	M6 x 10 depth	M6 x 10 depth	M5 x 5 depth	M5	9	4
32	M6 x 10 depth	M6 x 10 depth	M6 x 10 depth	M5 x 5 depth	M6	10	5

Tel: +45 63 12 83 00 | Email: ps@hymatik.com | www.hymatik.com | Hvidkaervej 27a, DK-5250 Odense SV, Denmark

P5GB - Parallel double acting, square jaw carriers

Available with a comprehensive range of bore sizes Ø12 - 32 mm the P5GB double acting parallel gripper is an accurate workpiece holding device. The anodised aluminium body has flexible installation mountings on three sides and recessed sensor grooves.

- Bore sizes Ø12, 16, 20, 25 and 32mm
- Double acting
- Anodised corrosion protection
- Magnetic piston as standard
- Optional sensors



Technical Information

Acting type		Double acting				
Bore (mm)		12	16	20	25	32
Port size		M3 x 0.5		M5 x 0.8		
Medium		Air				
Operating pressure range		1.5 - 7 bar				
Temperature range		-5 to +60°C (no freezing)				
Max frequency		180 Cycles/min				
Lubrication	Cylinder	Not required				
Lever	Grease					
Max. arm length mm (L)		30	40	60	70	85
Theoretical holding force kgf-cm						
	Closed side	0.8	2.4	4.7	7.5	10
	Opened side	0.5	1.8	3.5	6.0	8.5
Lever open / closed stroke		6	8	12	14	16
Weight (g)		66	144	255	419	719

For more information see www.parker.com/euro_pneumatic

P5GB - Parallel Grippers

Bore mm	Order code
12	**P5GB-012MSG006B**
16	**P5GB-016MSG008B**
20	**P5GB-020MSG012B**
25	**P5GB-025MSG014B**
32	**P5GB-032MSG016B**

Length of gripping point

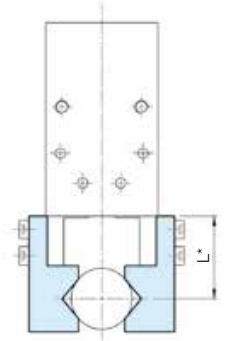

* L = gripping joint length 30mm, pressure 5kgf/cm²

Installation of sensor

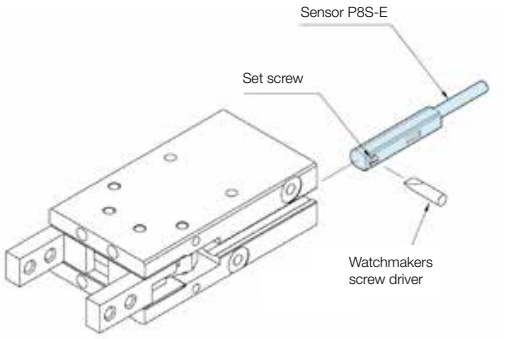

Sensors - Series P8S-E

Magnetic Sensor	**M8 - Snap in**	**Flying lead**
		
	0.165 m PUR cable with M8 connector	2 m PUR cable
PNP	**P8S-EPSUS**	**P8S-EPFXS**
NPN	**P8S-ENSUS**	**P8S-ENFXS**
Reed	**P8S-ERSUS**	**P8S-ERFXS**

Tel: +45 63 12 83 00 | Email: ps@hymatik.com | www.hymatik.com | Hvidkaervej 27a, DK-5250 Odense SV, Denmark

Dimensions (mm)

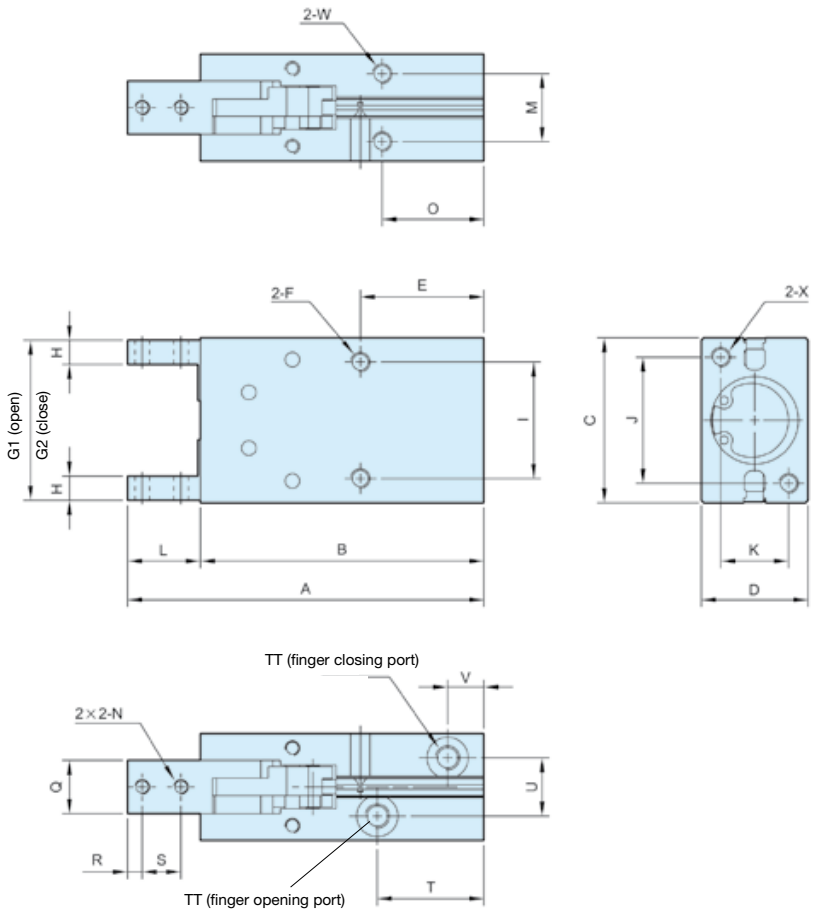

Bore mm	A	B	C	D	E	F	G1	G2	H	I	J	K	L	M	N	O	Q 0/-0.03	R
12	63,5	50,5	28	16	20	M3 x 0.5 x 5 depth	27	21	4	18	17	10	13	10	M3 x 0.5	16	7	3
16	73,5	58,5	34	22	25,5	M4 x 0.7 x 11 depth	33	25	5	24	26	14	15	14	M3 x 0.5	21	11	3
20	88,5	69,5	45	26	25	M5 x 0.8 x 8 depth	44	32	6	30	35	16	19	16	M4 x 0.7	19	12	4
25	102,5	78,5	52	32	28	M6 x 1.0 x 10 depth	51	37	8	36	40	20	24	20	M5 x 0.8	22	14	5
32	120,5	90,5	60	40	34	M6 x 1.0 x 10 depth	59	43	10	44	46	24	30	26	M6 x 1.0	26	20	7

Bore mm	S	T	TT	U	V	W	X
12	6	23	M5 x 0,8 x 5 depth	10,2	7,5	M3 x 0.5 x 5 depth	M3 x 0.5 x 5 depth
16	8	22	M5 x 0,8 x 5 depth	12	7,5	M4 x 0.7 x 7 depth	M4 x 0.7 x 7 depth
20	10	26	M5 x 0,8 x 5 depth	13	8	M5 x 0.8 x 8 depth	M5 x 0.8 x 8 depth
25	12	29	M5 x 0,8 x 5 depth	18	8,5	M6 x 1.0 x 10 depth	M6 x 1.0 x 10 depth
32	15	35	M5 x 0,8 x 5 depth	24	10,5	M6 x 1.0 x 10 depth	M6 x 1.0 x 10 depth

Tel: +45 63 12 83 00 | Email: ps@hymatik.com | www.hymatik.com | Hvidkaervej 27a, DK-5250 Odense SV, Denmark

P5GD - Parallel precision guided double acting, square jaw carriers

The P5GD is a parallel double acting gripper with integral linear guides that provide rigidity and high precision for the stainless steel jaw carriers. The anodised aluminium body has mounting points on four sides and integral sensors grooves.



- Bore sizes Ø10, 16, 20 and 25mm
- Double acting
- Stainless steel jaw carriers
- Anodised corrosion protection
- Magnetic piston as standard
- Optional sensors

Technical Information

Acting type	Double acting			
Bore (mm)	10	16	20	25
Port size	M3 x 0.5	M5 x 0.8		
Medium	Air			
Operating pressure range	2 to 7 bar	1 to 7 bar		
Temperature range	-10 to +60°C (no freezing)			
Repeatability	± 0.01 mm			
Max operating frequency	180 Cycles/min			
Lubrication	Not required			
Weight (g)	55	125	250	460

Bore	Gripping force [1] Gripping force per finger effective value N (kgf) External	Internal	Opening closing stroke (both sides) (mm)
10	9.8 (1)	17 (1.7)	4
16	30 (3.1)	40 (4.1)	6
20	42 (4.3)	66 (6.7)	10
25	65 (6.6)	104 (10.6)	14

[1] Values based on pressure of 0.5 MPa (5.1 kgf/cm2)

For more information see www.parker.com/euro_pneumatic

P5GD - Parallel Grippers

Bore mm	Order code
10	**P5GD-010MSG004B**
16	**P5GD-016MSG006B**
20	**P5GD-020MSG010B**
25	**P5GD-025MSG014B**

Length of gripping point

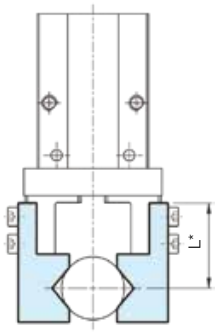

* L = Gripping point L = 20mm at center of stroke

Installation of sensor

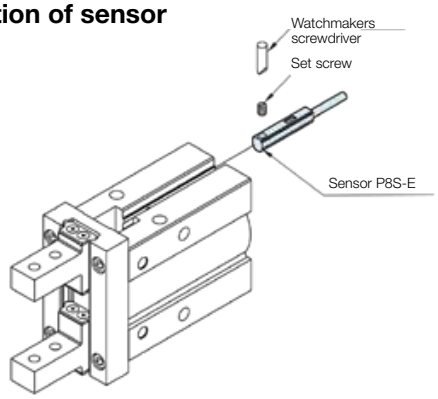

Sensors - Series P8S-E

Magnetic Sensor	M8 - Snap in	Flying lead
	0.165 m PUR cable with M8 connector	2 m PUR cable
PNP	**P8S-EPSUS**	**P8S-EPFXS**
NPN	**P8S-ENSUS**	**P8S-ENFXS**
Reed	**P8S-ERSUS**	**P8S-ERFXS**

Tel: +45 63 12 83 00 | Email: ps@hymatik.com | www.hymatik.com | Hvidkaervej 27a, DK-5250 Odense SV, Denmark

Dimensions (mm)

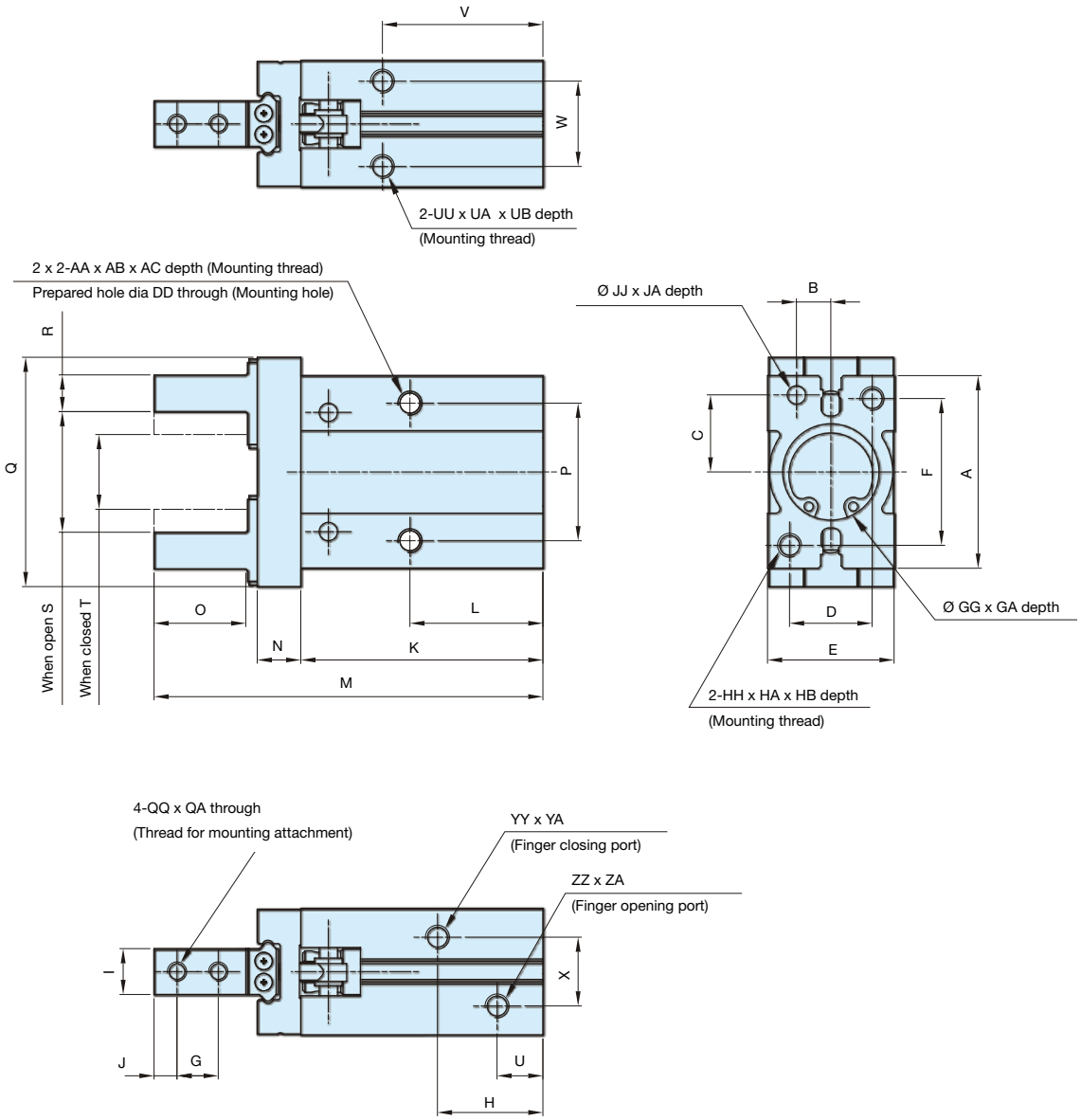

Bore mm	A	AA	AB	AC	B	C	D	DD	E	F	G	GG	GA	H	HH	HA	HB	I	J	JJ	JA	K	L	M
10	23	M3	0.5	5.5	5.2 $^{+0.025}_{0}$	7.6 $^{+0.02}_{-0.02}$	12	2.6	16.4 $^{+0.05}_{-0.05}$	18	5.7	11H9 $^{+0.043}_{0}$	2	19	M3	0.5	6	5 $^{0}_{-0.05}$	3	2H9 $^{+0.025}_{-0}$	3	37.8	23	57
16	30.6	M4	0.7	8	6.5 $^{+0.25}_{-0}$	11 $^{+0.02}_{-0.02}$	15	3.4	23.6 $^{+0.05}_{-0.05}$	22	7	17H9 $^{+0.043}_{0}$	2	19	M4	0.7	8	8 $^{0}_{-0.05}$	4	3H9 $^{+0.025}_{-0}$	3	42.5	24.5	67.3
20	42	M5	0.8	10	7.5 $^{+0.030}_{0}$	16.8 $^{+0.02}_{-0.02}$	18	3.4	27.6 $^{+0.05}_{-0.05}$	32	9	21H9 $^{+0.052}_{0}$	3	23	M5	0.8	10	10 $^{0}_{-0.05}$	5	4H9 $^{+0.030}_{-0}$	4	52.8	29	84.8
25	52	M6	1	12	10 $^{+0.02}_{-0.02}$	21.8 $^{+0.02}_{-0.02}$	22	5.1	33.6 $^{+0.05}_{-0.05}$	40	12	21H9 $^{+0.052}_{0}$	3.5	23.5	M6	1	12	12 $^{0}_{-0.05}$	6	4H9 $^{+0.02}_{-0.02}$	4	63.6	30	102.7

Bore mm	N	O	P	Q	QQ	QA	R	S	T	U	UU	UA	UB	V	W	X	YY	YA	ZZ	ZA
10	6	12	16	29	M2.5	0.45	4 $^{0}_{-0.1}$	15.2 $^{+2.2}_{0}$	11.2 $^{0}_{-0.7}$	9	M3	0.5	6	27	11.4	10	M3	0.5	M3	0.5
16	7.5	15	24	38	M3	0.5	5 $^{0}_{-0.1}$	20.9 $^{+2.2}_{-0.2}$	14.9 $^{0}_{-0.7}$	8.5	M4	0.7	4.5	30	16	13	M5	0.8	M5	0.8
20	9.5	20	30	50	M4	0.7	8 $^{0}_{-0.1}$	26.3 $^{+2.2}_{-0.2}$	16.3 $^{0}_{-0.7}$	10	M5	0.8	8	35	18.6	15	M5	0.8	M5	0.8
25	11	25	36	63	M5	0.8	10 $^{0}_{-0.1}$	33.3 $^{+2.2}_{-0.2}$	19.3 $^{0}_{-0.8}$	9.7	M6	1	10	36.5	22	20	M5	0.8	M5	0.8

Tel: +45 63 12 83 00 | Email: ps@hymatik.com | www.hymatik.com | Hvidkaervej 27a, DK-5250 Odense SV, Denmark

P5GL - 180° Angular double acting, cam style, square jaw carriers

The P5GL is a 180° angular gripper of compact size and lightweight construction. With double acting movement high gripping forces are achieved via internal cams. The anodised body has mounting points on four sides and sensors can be fitted in any of the four integral grooves.

- Bore sizes Ø10, 16, 20 and 25mm
- Double acting
- Anodised corrosion protection
- Magnetic piston as standard
- Optional sensors



Technical Information

Acting type	Double acting			
Bore (mm)	10	16	20	25
Medium	Air			
Operating pressure range	1 to 6 bar			
Temperature range	-10 to +60°C (no freezing)			
Repeatability	± 0.2 mm			
Max operating frequency	60 Cycles/min			
Lubrication	Not required			
Effective force (Nm) at (5kgf/cm²)	0.16	0.54	1.10	2.28
Operating angle (both sides)				
Opened side	180° - 182°			
Closed side	-3°			
Weight (g)	80	150	320	600

For more information see www.parker.com/euro_pneumatic

P5GL - 180° Angular Grippers - Cam Style

Bore mm	Order code
10	**P5GL-010MSG180B**
16	**P5GL-016MSG180B**
20	**P5GL-020MSG180B**
25	**P5GL-025MSG180B**

Sensors - Series P8S-H

Magnetic Sensor	**M8 - Snap in**	**Flying lead**
		
	0.165 m PUR cable with M8 connector	1 m PUR cable
Reed NO	**P8S-HRSUS**	**P8S-HRFCS**

Parker Hannifin Corporation
Pneumatic Division - Europe

Tel: +45 63 12 83 00 | Email: ps@hymatik.com | www.hymatik.com | Hvidkaervej 27a, DK-5250 Odense SV, Denmark

Dimensions (mm)

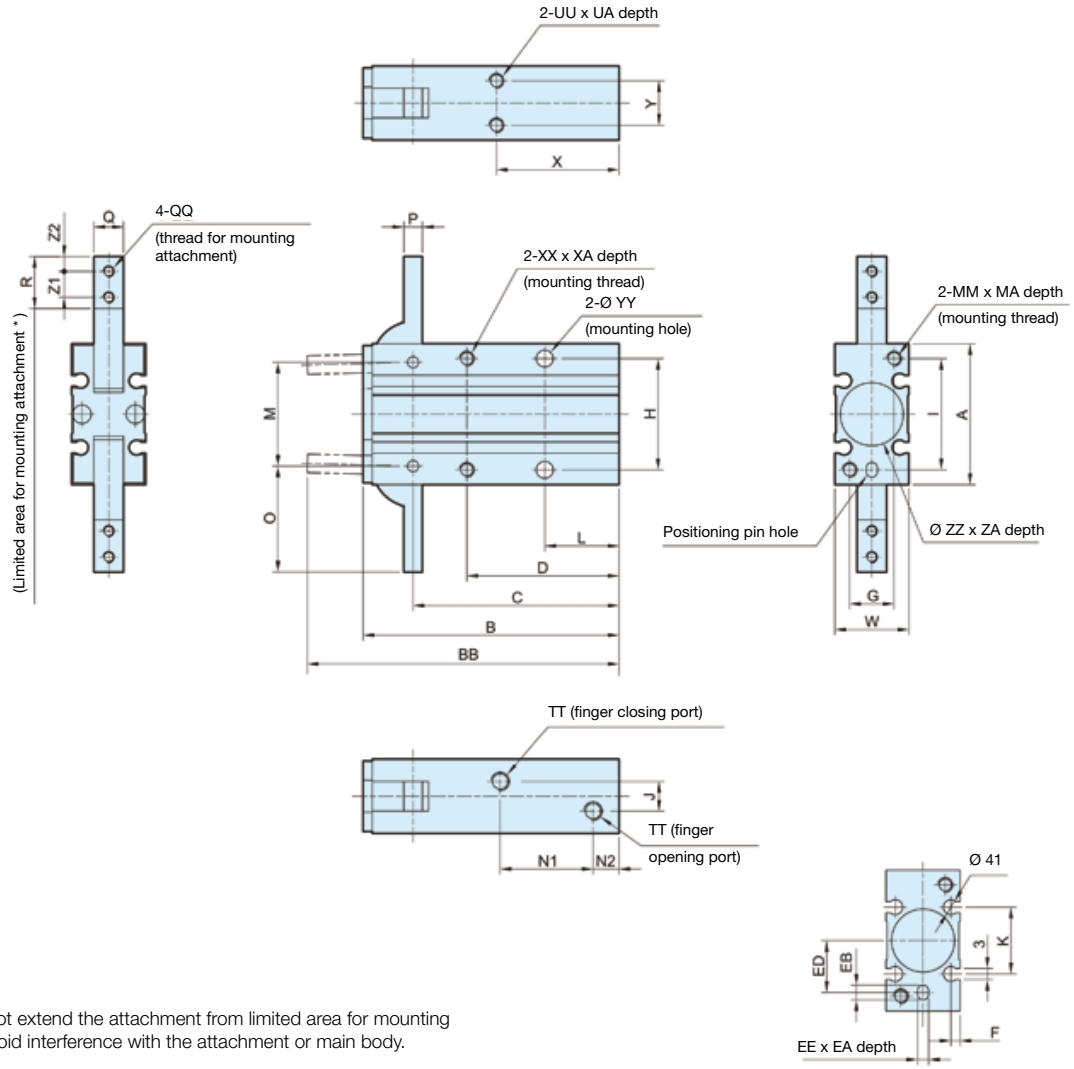

* Do not extend the attachment from limited area for mounting to avoid interference with the attachment or main body.

Bore mm	A	B	BB	C	D	EE	EA	EB	ED	F	G	H	I	J	K	L	M	MA	MM	N1	N2	O	P	Q
12	30	58	71	47,5	35	3H9 $^{+0.025}_{0}$	3	4	9	2	9	24	24	3	13	18	22	6	M3 x 0.5	23	7	23,5	4	6 $^{+0.005}_{-0.025}$
16	38	69	84	55,5	41	3H9 $^{+0.025}_{0}$	3	4	15	2,5	12	30	30	8	18	20	28	8	M4 x 0.7	25	7	28,5	5	8 $^{+0.005}_{-0.025}$
20	48	86	106	69	50	4H9 $^{+0.030}_{0}$	4	5	19	3	16	36	38	12	20	25	36	10	M5 x 0.8	32	8	37	8	10 $^{+0.005}_{-0.025}$
25	58	107	131	86	60	4H9 $^{+0.030}_{0}$	4	5	23	3	18	42	46	14	24	30	45	12	M6 x 1	42	8	45	10	12 $^{+0.005}_{-0.025}$

Bore mm	QH	QQ	R	TT	UA	UU	W	X	XA	XX	Y	YY	ZA	ZZ	Z1	Z2
12	3,4	M3 x 0.5	12	M5 x 0.8 x 5 depth	4	M3 x 0.5	15	30	6	M3 x 0.5	9	3,4	1,5	11H9 $^{+0.043}_{0}$	6	3
16	3,4	M3 x 0.5	14	M5 x 0.8 x 5 depth	5	M4 x 0.7	20	33	8	M4 x 0.7	12	4,5	1,5	17H9 $^{+0.043}_{0}$	7	4
20	4,5	M4 x 0.7	18	M5 x 0.8 x 5 depth	8	M5 x 0.8	26	42	10	M5 x 0.8	14	5,5	1,5	21H9 $^{+0.052}_{0}$	9	5
25	5,5	M5 x 0.8	22,5	M5 x 0.8 x 5 depth	10	M6 x 1	30	50	12	M6 x 1	16	6,6	1,5	26H9 $^{+0.052}_{0}$	12	6

P5RS - Rotary Actuators

The P5RS rotary table units provide precise control even under heavy loads, with specially designed load fixing and centring capabilities. End stroke cushioning using supplied adjusting bolts or optional shock absorbers offers dependable linear cushioning enabling objects to be carried and positioned safely and securely.



- Bores Ø16, 20, 25 and 32mm
- Twin rack and pinion
- Adjustable between 0° and 190°
- Magnetic piston standard
- Stroke adjusters standard
- Optional shock absorbers bore Ø20 and 25mm
- Easy mounting of work piece

Operating Information

Pressure range:	1 to 9 bar
Temperature range:	-5° to 60° C
Filtration requirements:	
Air filtration	40 micron or better
Air lubrication	Not necessary*
Air humidity	Low moisture content (dry)

* Addition of lubrication will greatly increase service life

For more information see www.parker.com/euro_pneumatic

Ordering Information: P5RS

Bore mm	Description	Ports (BSPP)	Rotation	Torque (N-m at 5 bar)	Weight (kg)	**Order code**
16	Rotary table, stroke adjusters	1/8	190 degrees	1.21	0.7	**P5RS-016DSG190B**
20	Rotary table, stroke adjusters	1/8	190 degrees	2.51	1.16	**P5RS-020DSG190B**
25	Rotary table, stroke adjusters	1/8	190 degrees	4.91	1.57	**P5RS-025DSG190B**
32	Rotary table, stroke adjusters	1/8	190 degrees	9.86	3.07	**P5RS-032DSG190B**

Note: Above units are supplied with rubber buffer stroke adjusters.

Optional Shock Absorbers

Bore mm	Rotary Actuator	**Order code**
16	P5RS-016DSG190B	**N/A**
20	P5RS-020DSG190B	**N/A**
25	P5RS-025DSG190B	**MC150M**
32	P5RS-032DSG190B	**MC225M**

Sensors - Series P8S-F

Magnetic Sensor	**M8 - Snap in**	**Flying lead**
		
	0.15 m PUR cable with M8 connector	2 m PUR cable
Reed, NO	**P8S-FRSUS**	**P8S-FRFXS**

Tel: +45 63 12 83 00 | Email: ps@hymatik.com | www.hymatik.com | Hvidkaervej 27a, DK-5250 Odense SV, Denmark

Load capacity P5RS Rotary Table

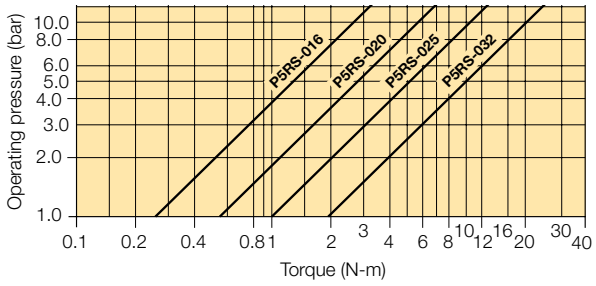

Allowable load

Set the load and moment to be applied to the table within the allowable values shown in the table below.(Values outside of limitations will cause excessive play, deteriorate accuracy, and shorten service life).

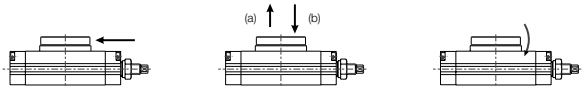

Bore	Allowable radial load (N)	Allowable thrust load (N) (a)	(b)	Allowable moment (Nm)
16	78	74	78	2.4
20	147	137	137	4.0
25	196	197	363	5.3
32	314	296	451	9.7

Dimensions P5RS Rotary Table

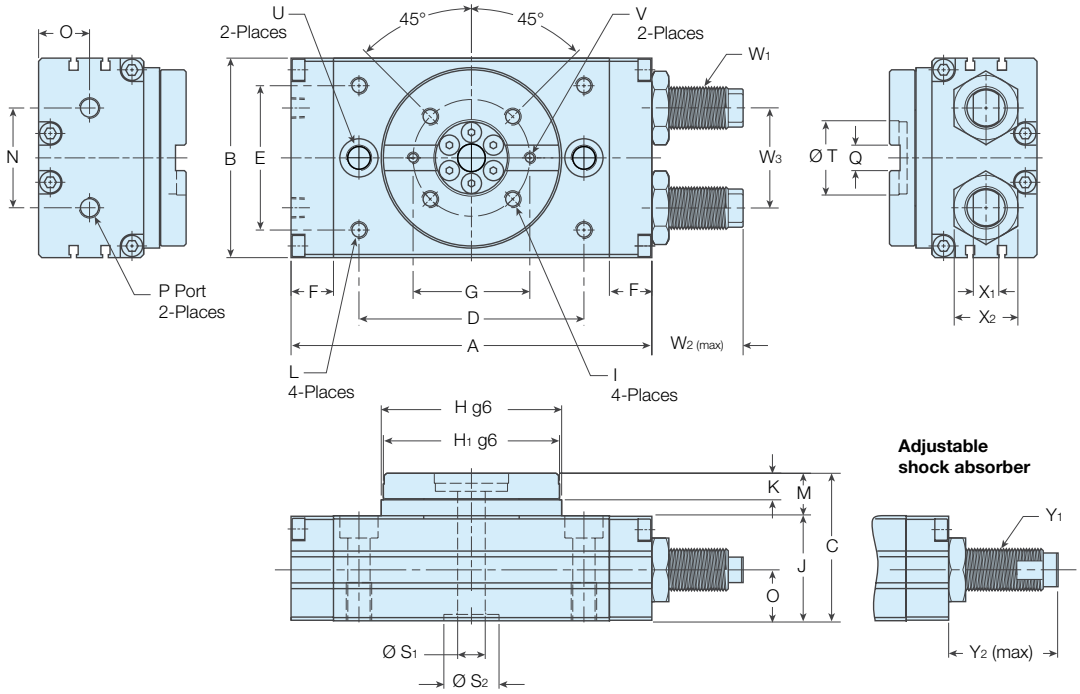

Bore mm	A	B	C	D	E	F	G	H	H1	I	J	K	L	M	N	O	P BSPP	Q
16	108	58	47	62	38	15	38	50	48	M5 x 7 Dp, P.C.D38	33	8	M5 x 8 Dp	14	26	15.5	PT 1/8	8 $^{+0.03}_{-0}$ x 3.3 Dp
20	128	68	55	78	47	15	46	62.5	60	M6 x 7 Dp, P.C.D46	38	10	M6 x 8 Dp	17	27	18.5	PT 1/8	10 $^{+0.03}_{-0}$ x 3.5 Dp
25	135.5	77	58.5	84	55	15.5	48	67	65	M6 x 9 Dp, P.C.D48	41.5	10	M6 x 8 Dp	17	37	20	PT 1/8	12 $^{+0.03}_{-0}$ x 4 Dp
32	170	94	69.5	106	68	20	55	85	83	M8 x 10 Dp, P.C.D55	49.5	12.5	M8 x 8.5 Dp	20	47	24	PT 1/8	12 $^{+0.03}_{-0}$ x 5 Dp

Bore mm	S1	S2	T	U	V	W1	W2	W3	X1	X2	Y1	Y2
16	6	17 (H7) x 2.5 Dp	24 (H7) x 3 Dp	2-Ø 6.8 thru, Ø11 x 6.5 Dp, M8 x 12 Dp (Sink)	M3 x 4 Dp	M10 x 1,0	27	26	7	17	N/A	N/A
20	10	22 (H7) x 2.5 Dp	32 (H7) x 3 Dp	2-Ø 8.6 thru, Ø14 x 8.5 Dp, M10 x 15 Dp (Sink)	M4 x 6 Dp	M12 x 1,0	23	32	8	19	N/A	N/A
25	13	22 (H7) x 3 Dp	32 (H7) x 3.7 Dp	2-Ø 8.6 thru, Ø14 x 8.5 Dp, M10 x 15 Dp (Sink)	M4 x 5 Dp	M14 x 1,5	36	37	8	22	MC150M	52
32	13	26 (H7) x 3 Dp	35 (H7) x 4.7 Dp	2-Ø 10.5 thru, Ø18 x 10.5 Dp, M12 x 18 Dp (Sink)	M5 x 5 Dp	M20 x 1.5	43	47	12	30	MC225M	62

Dimensions in (mm)

Tel: +45 63 12 83 00 | Email: ps@hymatik.com | www.hymatik.com | Hvidkaervej 27a, DK-5250 Odense SV, Denmark

P5SS - Precision Slide Tables

The Precision Slide Table P5SS is a pneumatic actuator, operated by two cylinders mounted in parallel for moving loads fitted on its mobile carriage or on its front plate quickly and accurately. Optional end of stroke adjusters offer precise adjustment even when the slide table is pressurised.



- High precision
- Bores Ø6, 8, 12,16, 20 and 25mm
- Combination of dual bore cylinder and linear rail
- Magnetic piston standard
- Rubber bumper standard
- Optional stroke adjusters
- Optional shock absorbers bores Ø8 - 25mm

Operating Information

Pressure range:	1.5 to 7 bar
Temperature range:	-5° to 60° C
Filtration requirements:	
Air filtration	40 micron or better
Air lubrication	Not necessary*
Air humidity	Low moisture content (dry)

* Addition of lubrication will greatly increase service life

For more information see www.parker.com/euro_pneumatic

Ordering Information: P5SS

Ø6mm bore

Stroke (mm)	Order code
10	**P5SS-006DSG010B**
20	**P5SS-006DSG020B**
30	**P5SS-006DSG030B**
40	**P5SS-006DSG040B**
50	**P5SS-006DSG050B**

Ø8mm bore

Stroke (mm)	Order code
10	**P5SS-008DSG010B**
20	**P5SS-008DSG020B**
30	**P5SS-008DSG030B**
40	**P5SS-008DSG040B**
50	**P5SS-008DSG050B**
75	**P5SS-008DSG075B**

Ø12mm bore

Stroke (mm)	Order code
10	**P5SS-012DSG010B**
20	**P5SS-012DSG020B**
30	**P5SS-012DSG030B**
40	**P5SS-012DSG040B**
50	**P5SS-012DSG050B**
75	**P5SS-012DSG075B**
100	**P5SS-012DSG100B**

Ø16mm bore

Stroke (mm)	Order code
10	**P5SS-016DSG010B**
20	**P5SS-016DSG020B**
30	**P5SS-016DSG030B**
40	**P5SS-016DSG040B**
50	**P5SS-016DSG050B**
75	**P5SS-016DSG075B**
100	**P5SS-016DSG100B**
125	**P5SS-016DSG125B**

Ø20mm bore

Stroke (mm)	Order code
10	**P5SS-020DSG010B**
20	**P5SS-020DSG020B**
30	**P5SS-020DSG030B**
40	**P5SS-020DSG040B**
50	**P5SS-020DSG050B**
75	**P5SS-020DSG075B**
100	**P5SS-020DSG100B**
125	**P5SS-020DSG125B**

Ø25mm bore

Stroke (mm)	Order code
10	**P5SS-025DSG010B**
20	**P5SS-025DSG020B**
30	**P5SS-025DSG030B**
40	**P5SS-025DSG040B**
50	**P5SS-025DSG050B**
75	**P5SS-025DSG075B**
100	**P5SS-025DSG100B**
125	**P5SS-025DSG125B**
150	**P5SS-025DSG150B**

Sensors - Series P8S-E

Magnetic Sensor	**M8 - Snap in**	**Flying lead**
		
	0.165 m PUR cable with M8 connector	2 m PUR cable
PNP	**P8S-EPSUS**	**P8S-EPFXS**
NPN	**P8S-ENSUS**	**P8S-ENFXS**
Reed	**P8S-ERSUS**	**P8S-ERFXS**

Tel: +45 63 12 83 00 | Email: ps@hymatik.com | www.hymatik.com | Hvidkaervej 27a, DK-5250 Odense SV, Denmark

Precision Slide Table Ø6 - Dimensions (mm)

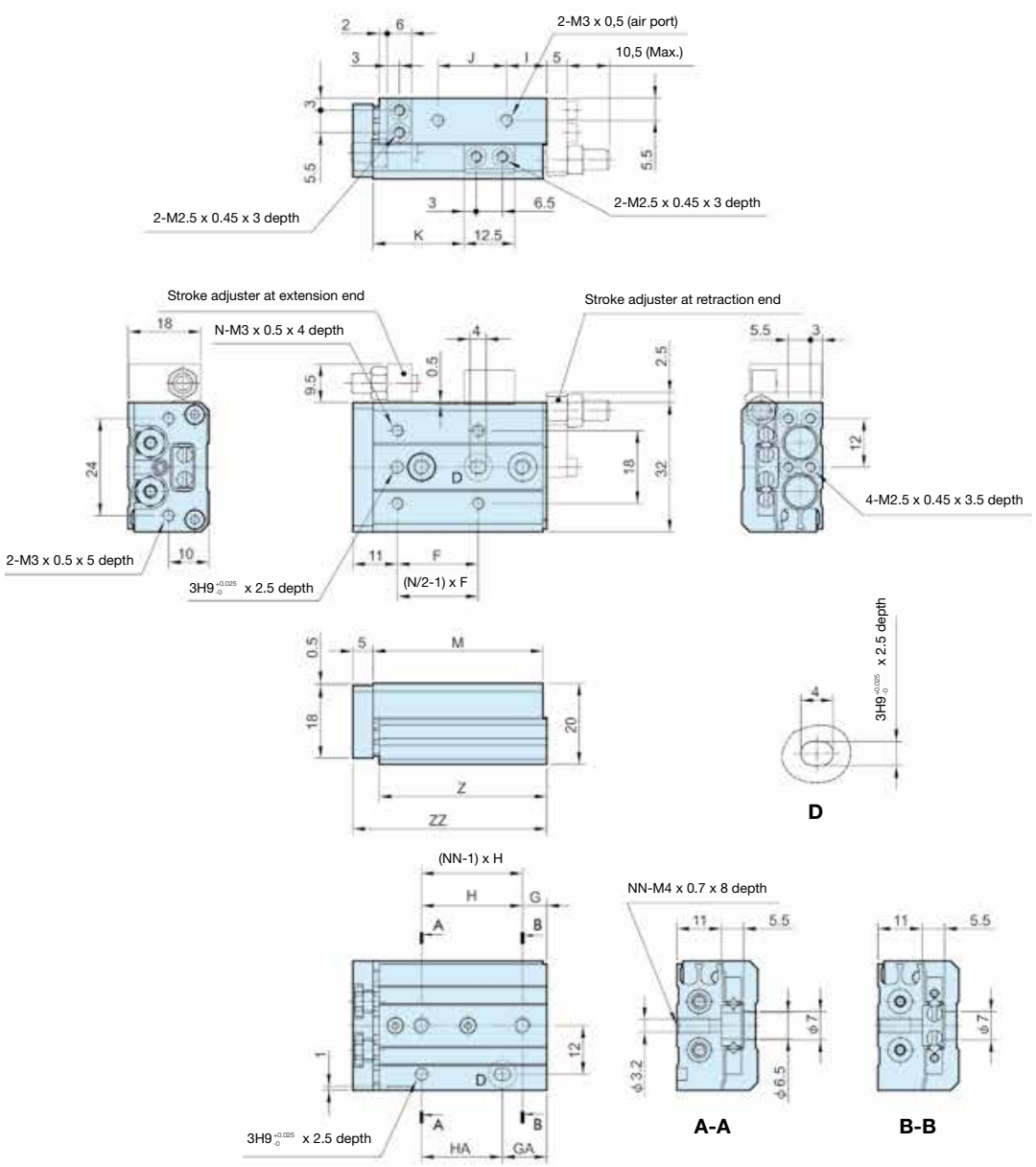

Stroke	F	G	GA	H	HA	I	J	K	M	N	NN	Z	ZZ
10	20	6	11	25	20	10	17	22,5	42	4	2	41,5	48
20	30	6	21	35	20	10	27	32,5	52	4	2	51,5	58
30	20	11	31	20	20	7	40	42,5	62	6	3	61,5	68
40	28	13	43	30	30	19	50	52,5	84	6	3	83,5	90
50	38	17	41	24	48	25	60	62,5	100	6	4	99,5	106

Tel: +45 63 12 83 00 | Email: ps@hymatik.com | www.hymatik.com | Hvidkaervej 27a, DK-5250 Odense SV, Denmark

Precision Slide Table Ø8 - Dimensions (mm)

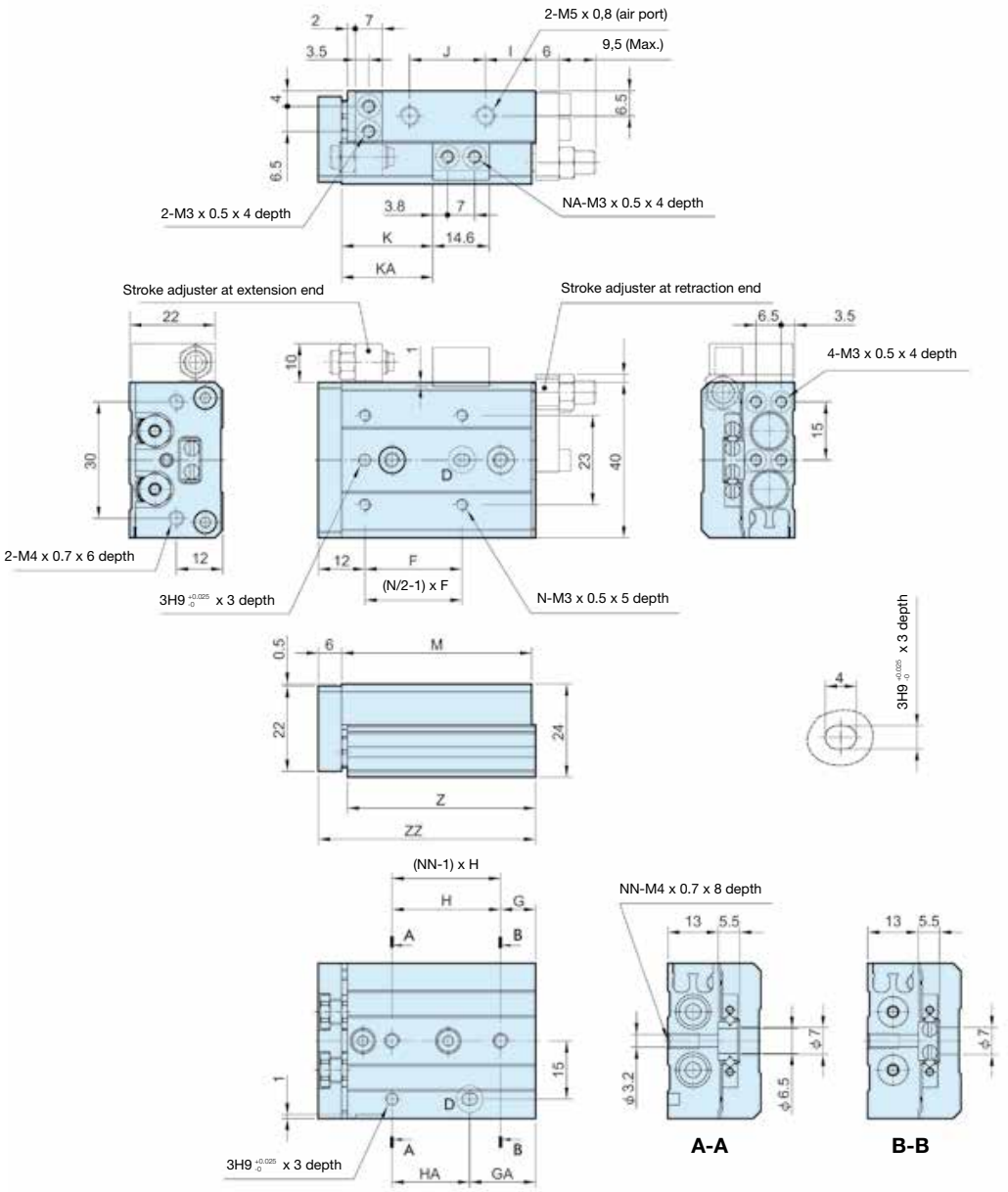

Stroke	F	G	GA	H	HA	I	J	K	KA	M	N	NA	NN	Z	ZZ
10	25	9	17	28	20	13	19,5	23,5	-	49	4	2	2	48,5	56
20	25	12	12	30	30	8,5	29	33,5	-	54	4	2	2	53,5	61
30	40	13	33	20	20	9,5	39	43,5	-	65	4	2	3	64,5	72
40	50	15	43	28	28	10,5	56	53,5	-	83	4	2	3	82,5	90
50	38	20	43	23	46	24,5	60	63,5	82,5	101	6	4	4	100,5	108
75	50	27	83	28	56	38,5	96	88,5	132,5	151	6	4	5	105,5	158

Tel: +45 63 12 83 00 | Email: ps@hymatik.com | www.hymatik.com | Hvidkaervej 27a, DK-5250 Odense SV, Denmark

Precision Slide Table Ø12 - Dimensions (mm)

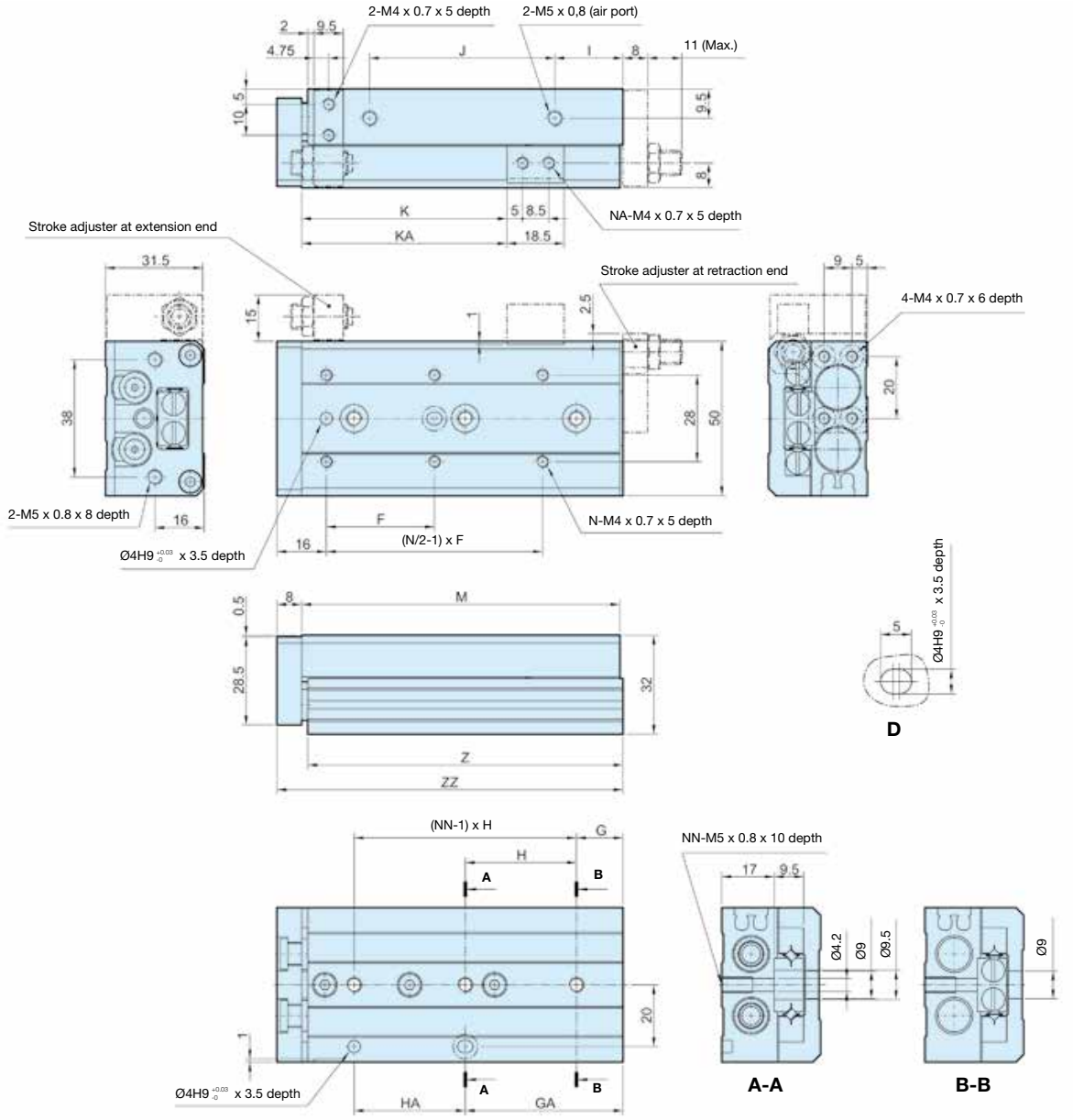

Stroke	F	G	GA	H	HA	I	J	K	KA	M	N	NA	NN	Z	ZZ
10	35	15	15	40	40	10	40	26,5	-	71	4	2	2	70	80
20	35	15	15	40	40	10	40	36,5	-	71	4	2	2	70	80
30	35	15	15	40	40	10	40	46,5	-	71	4	2	2	70	80
40	50	17	42	25	25	10	52	56,5	-	83	4	2	3	82	92
50	35	15	51	36	36	22	60	66,5	-	103	6	2	3	102	112
75	55	25	61	36	72	43	85	91,5	125,5	149	6	4	4	148	158
100	65	35	111	38	76	52	130	116,5	179,5	203	6	4	5	202	212

Tel: +45 63 12 83 00 | Email: ps@hymatik.com | www.hymatik.com | Hvidkaervej 27a, DK-5250 Odense SV, Denmark

Precision Slide Table Ø16 - Dimensions (mm)

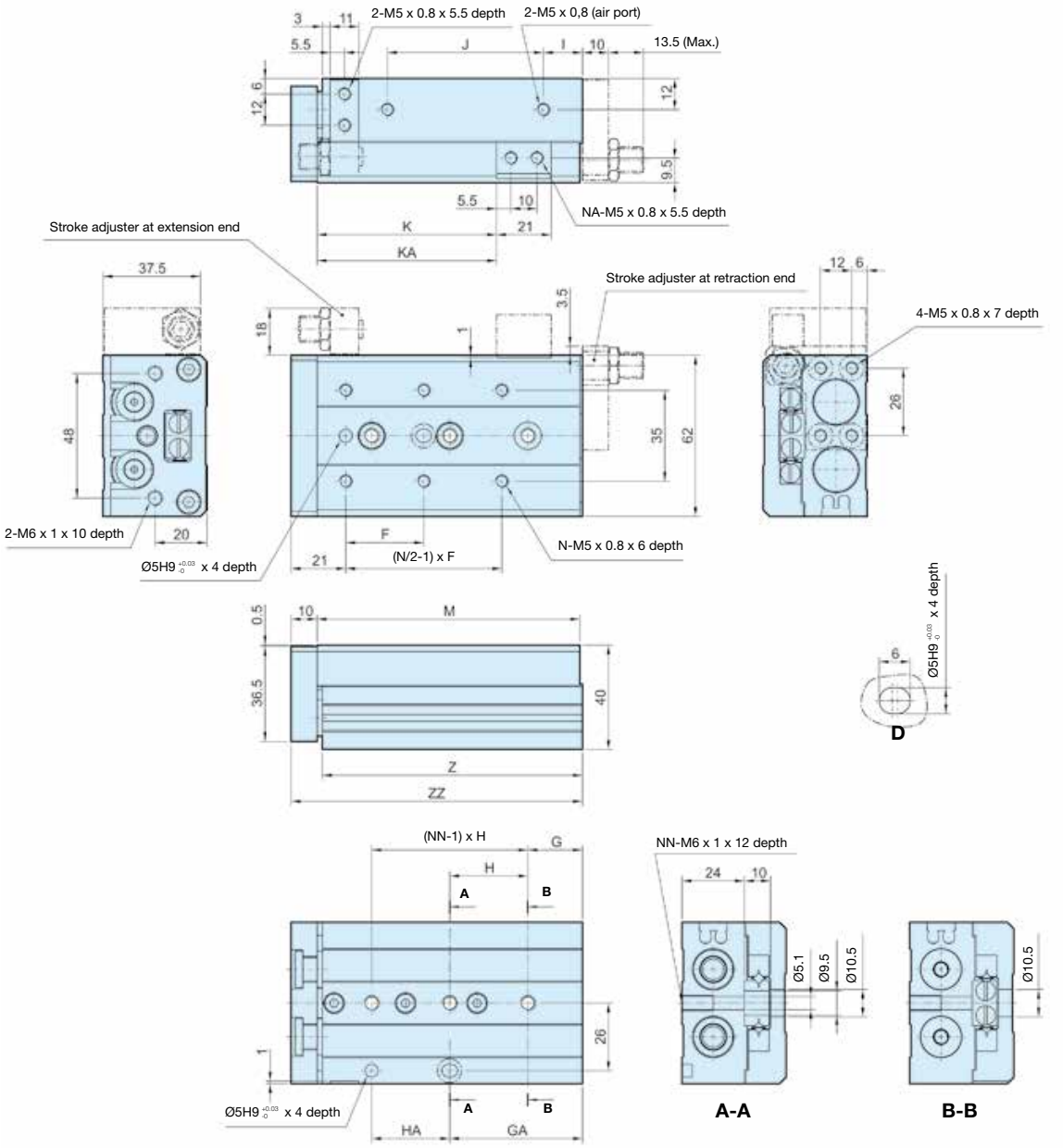

Stroke	F	G	GA	H	HA	I	J	K	KA	M	N	NA	NN	Z	ZZ
10	35	16	16	40	40	10	40	29	-	76	4	2	2	75	87
20	35	16	16	40	40	10	40	39	-	76	4	2	2	75	87
30	35	16	16	40	40	10	40	49	-	76	4	2	2	75	87
40	40	16	16	50	50	10	50	59	-	86	4	2	2	85	97
50	30	21	51	30	30	15	60	69	-	101	6	2	3	100	112
75	55	26	61	35	70	40	85	94	125	151	6	4	4	150	162
100	65	39	109	35	70	55	118	119	173	199	6	4	5	198	210
125	70	19	159	35	70	68	155	144	223	249	8	4	7	248	260

Tel: +45 63 12 83 00 | Email: ps@hymatik.com | www.hymatik.com | Hvidkaervej 27a, DK-5250 Odense SV, Denmark

Precision Slide Table Ø20 - Dimensions (mm)

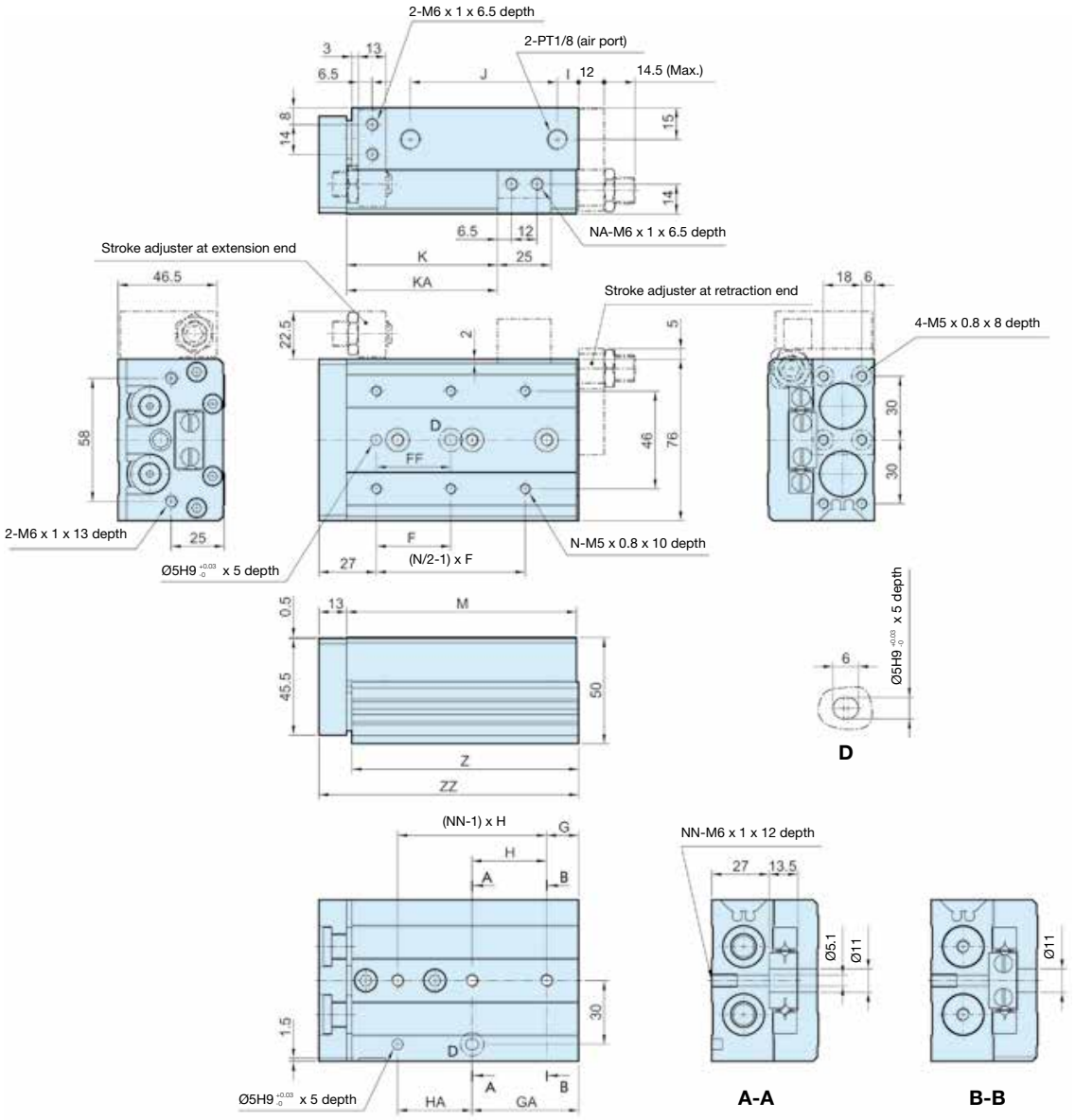

Stroke	F	FF	G	GA	H	HA	I	J	K	KA	M	N	NA	NN	Z	ZZ
10	50	40	15	25	45	35	10	44	31	-	83	4	2	2	81,5	97
20	50	40	15	25	45	35	10	44	41	-	83	4	2	2	81,5	97
30	50	40	15	25	45	35	10	44	51	-	83	4	2	2	81,5	97
40	60	50	15	35	55	35	10	54	61	-	93	4	2	2	91,5	107
50	35	35	15	50	35	35	10	69	71	-	108	6	2	3	106,5	122
75	60	60	19	54	35	70	10	108	96	-	147	6	2	4	145,5	161
100	70	70	37	107	35	70	58	113	121	169	200	6	4	5	198,5	214
125	70	70	41	155	38	76	70	155	146	223	254	8	4	6	252,5	268
150	80	80	19	195	44	88	87	190	171	275	306	8	4	7	304,5	320

Tel: +45 63 12 83 00 | Email: ps@hymatik.com | www.hymatik.com | Hvidkaervej 27a, DK-5250 Odense SV, Denmark

Precision Slide Table Ø25 - Dimensions (mm)

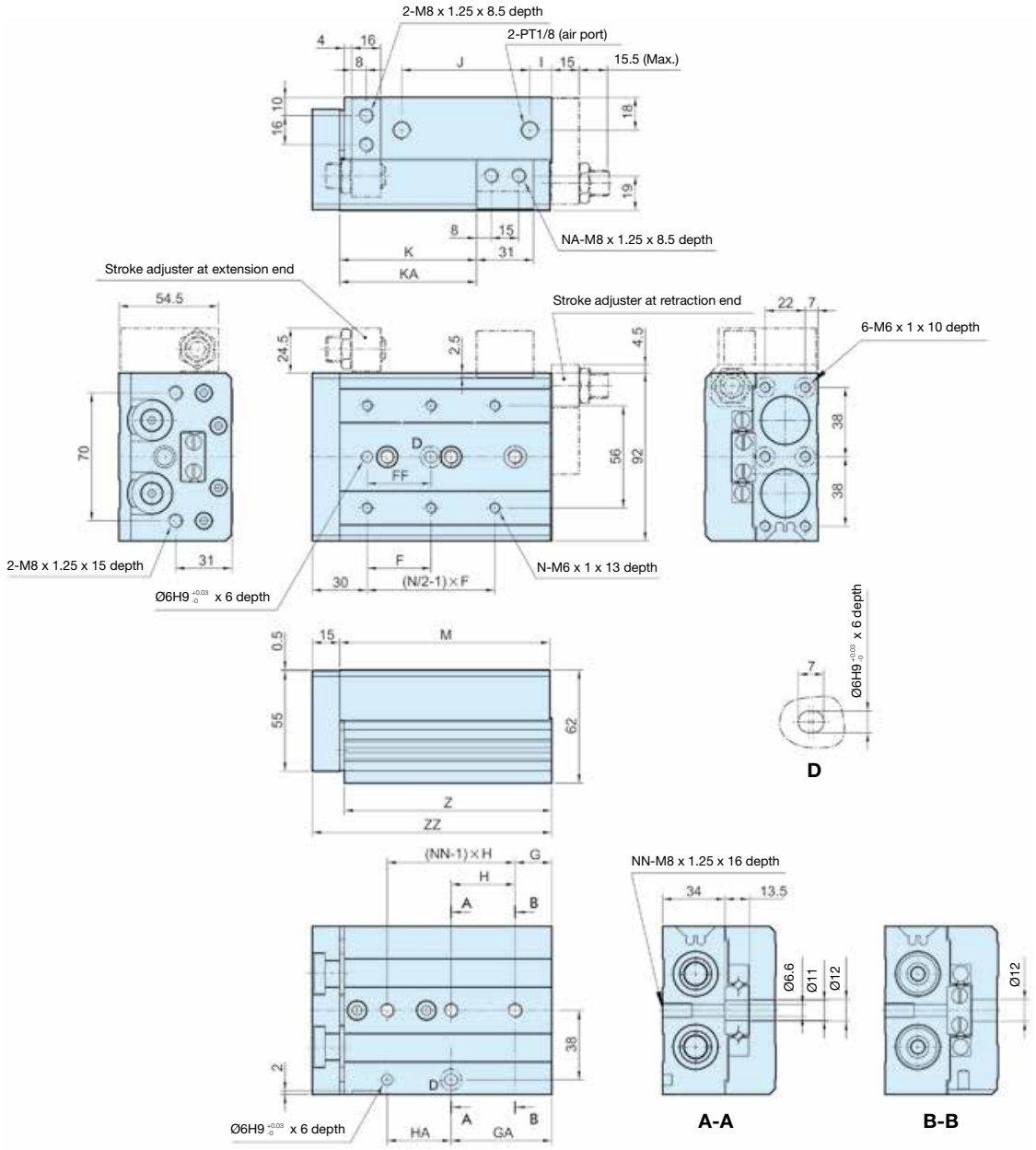

Stroke	F	FF	G	GA	H	HA	I	J	K	KA	M	N	NA	NN	Z	ZZ
10	50	40	22	22	45	45	12	47	35	-	92	4	2	2	90,5	108
20	50	40	22	22	45	45	12	47	45	-	92	4	2	2	90,5	108
30	50	40	22	22	45	45	12	47	55	-	92	4	2	2	90,5	108
40	60	50	22	22	55	55	12	57	65	-	102	4	2	2	100,5	118
50	35	35	20	55	35	35	12	70	75	-	115	6	2	3	113,5	131
75	60	60	26	61	35	70	33	90	100	-	156	6	2	4	154,5	172
100	70	70	32	102	35	70	50	114	125	162	197	6	4	5	195,5	213
125	75	75	40	154	38	76	67	155	150	218	255	8	4	6	253,5	271
150	80	80	30	190	40	80	82	180	175	258	295	8	4	7	293,5	311

Tel: +45 63 12 83 00 | Email: ps@hymatik.com | www.hymatik.com | Hvidkaervej 27a, DK-5250 Odense SV, Denmark

Accessories Ø6 - Ø25

Stroke adjuster at extension end:

Mounted to body

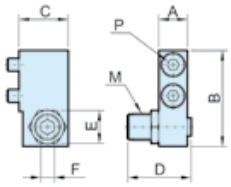

Mounted to table

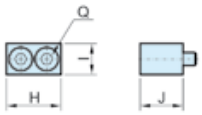

Bore mm	Order code	Adjustable stroke range (mm)	Mounted to body								Mounted to table			
			A	B	C	D	E	F	M	P*	H	I	J	Q*
6	**P5SS-006-EA-05**	5	6	17,8	10,5	16,5	7	2,5	M5 x 0.8	M2.5x10	12,5	6	8,5	M2.5 x 8
	P5SS-006-EA-15	15				26,5								
8	**P5SS-008-EA-05**	5	7	21,5	11	16,5	8	3	M6 x 1	M3 x 10	14,6	7	10	M3 x 10
	P5SS-008-EA-15	15				26,5								
	P5SS-008-EA-25	25				36,5								
12	**P5SS-012-EA-05**	5	9,5	31	16	20	11	4	M8 x 1	M4 x 16	18,5	10	13	M4 x 12
	P5SS-012-EA-15	15				30								
	P5SS-012-EA-25	25				40								
16	**P5SS-016-EA-05**	5	11	37	19	24,5	14	5	M10 x 1	M5 x 16	21	12	16,5	M5 x 16
	P5SS-016-EA-15	15				34,5								
	P5SS-016-EA-25	25				44,5								
20	**P5SS-020-EA-05**	5	13	45,5	24	27,5	17	6	M12 x 1.25	M6 x 20	25	13	21	M6 x 20
	P5SS-020-EA-15	15				37,5								
	P5SS-020-EA-25	25				47,5								
25	**P5SS-025-EA-05**	5	16	53,5	26,5	32,5	19	6	M14 x 1.5	M8 x 25	31	17	25,5	M8 x 25
	P5SS-025-EA-15	15				42,5								
	P5SS-025-EA-25	25				52,5								

* Size of hexagon socket head cap screws

Stroke adjuster at retraction end:

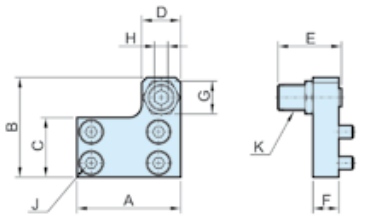

P5SS-006
P5SS-008

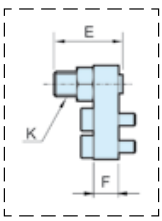

Bore mm	Order code	Adjustable stroke range (mm)	A	B	C	D	E	F	G	H	J*	K
6	**P5SS-006-RA-05**	5	21	19	10,5	8	16,5	5	7	2,5	M2.5 x 8	M5 x 0.8
	P5SS-006-RA-15	15					26,5					
8	**P5SS-008-RA-05**	5	25	22,5	12,5	9	16,5	6	8	3	M3 x 10	M6 x 1
	P5SS-008-RA-15	15					26,5					
	P5SS-008-RA-25	25					36,5					
12	**P5SS-012-RA-05**	5	32	31	18,5	13	20	8	12	4	M4 x 8	M8 x 1
	P5SS-012-RA-15	15					30					
	P5SS-012-RA-25	25					40					
16	**P5SS-016-RA-05**	5	40	38,5	23	15	24,5	10	14	5	M5 x 10	M10 x 1
	P5SS-016-RA-15	15					34,5					
	P5SS-016-RA-25	25					44,5					
20	**P5SS-020-RA-05**	5	50	48	29	21	27,5	12	17	6	M5 x 12	M12 x 1.25
	P5SS-020-RA-15	15					37,5					
	P5SS-020-RA-25	25					47,5					
25	**P5SS-025-RA-05**	5	60	58	35	23	32,5	15	19	6	M6 x 16	M14 x 1.5
	P5SS-025-RA-15	15					42,5					
	P5SS-025-RA-25	25					52,5					

* Size of hexagon socket head cap screws

Tel: +45 63 12 83 00 | Email: ps@hymatik.com | www.hymatik.com | Hvidkaervej 27a, DK-5250 Odense SV, Denmark

Accessories Ø8 - Ø25

Shock absorber at extension end:

Mounted to body

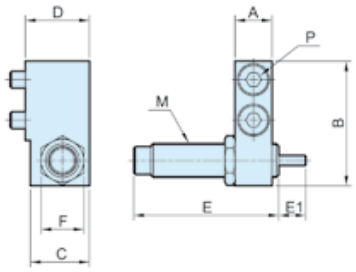

Mounted to table

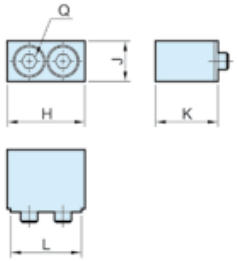

Bore	Order code	Mounted to body									Mounted to table				
mm		A	B	C	D	E	E1	F	M	P*	H	J	K	L	Q*
8	**P5SS-008-ESK**	7	23	14	15,5	40,6	6	11	M8 x 1	M3 x 16	16,6	7	15,5	14,6	M3 x 16
12	**P5SS-012-ESK**	9,5	31	14,5	16	40,6	6	11	M8 x 1	M4 x 16	20,5	10	15	18,5	M4 x 12
16	**P5SS-016-ESK**	11	37	17,5	19	47	7	12,7	M10 x 1	M5 x 16	23	12	18,5	21	M5 x 16
20	**P5SS-020-ESK**	13	45,5	23,5	26	67	12	19	M14 x 1.5	M6 x 25	27	13	25,5	25	M6 x 25
25	**P5SS-025-ESK**	16	53,5	23,5	26,5	67	12	19	M14 x 1.5	M8 x 25	33	17	25,5	31	M8 x 25

* Size of hexagon socket head cap screws

Shock absorber at retraction end:

Mounted to body

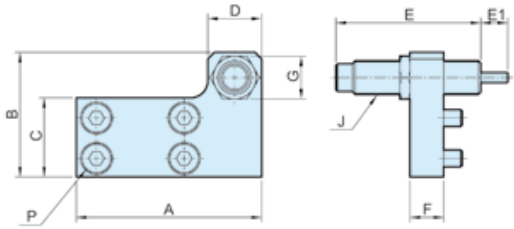

Mounted to table

P5SS-008

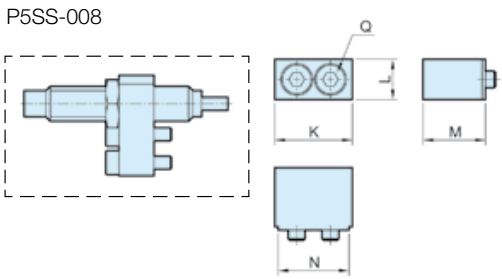

Bore	Order code	Mounted to body										Mounted to table				
mm		A	B	C	D	E	E1	F	G	J	P*	K	L	M	N	Q*
8	**P5SS-008-RSK**	38	23	12,5	14	40,6	6	8	12	M8 x 1	M3 x 12	16,6	7	15,5	14,6	M3 x 16
12	**P5SS-012-RSK**	45	31	18	14	40,6	6	8	11	M8 x 1	M4 x 8	20,5	10	15	18,5	M4 x 12
16	**P5SS-016-RSK**	55	37	23,5	16	47	7	10	12,7	M10 x 1	M5 x 10	23	12	18,5	21	M5 x 16
20	**P5SS-020-RSK**	70	47	29	23	67	12	12	19	M14 x 1.5	M5 x 12	27	13	25,5	25	M6 x 25
25	**P5SS-025-RSK**	80	54	35	23	67	12	12	19	M14 x 1.5	M6 x 16	33	17	25,5	31	M8 x 25

* Size of hexagon socket head cap screws

Tel: +45 63 12 83 00 | Email: ps@hymatik.com | www.hymatik.com | Hvidkaervej 27a, DK-5250 Odense SV, Denmark

Pneumatic Stop Cylinders

Pneumatic stop cylinders with hydraulic industrial shock absorbers for soft, rebound-free stopping of a conveyed load.

Pneumatic Stop Cylinders

- Soft, rebound-free stopping of a conveyed load.
- Flexible: for vertical or horizontal installation
- Types with shock absorber/roller lever combination, lone roller or roller with a piston rod that ensures direct stoppage
- Shock absorbers are easy to replace, even when fitted
- Rotating stop head for adjustment in line with the direction of travel of the conveyed load
- Rocker can be deactivated for alternate travel function
- Single and double acting cylinder variants
- Operating pressure up to 10 bar
- Different shock absorbers for conveyed load weights of up to 1700 kg and speeds of up to 45 m/min
- Optional: position switch for piston rod and proximity switch for rocker

Rocker locking
After the conveyed load is stopped, the rocker is lowered and unlocked by applying compressed air. After the conveyed load has been moved, the return spring brings the rocker into its upper end position so that it is back in its start position for the next stopping procedure.

Integrated shock absorbers
The shock absorbers, aligned to the weight and speed of the load, ensure gentle and precise stopping of the conveyed load

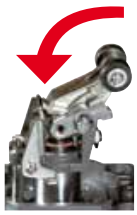



Guide rod
Thanks to the easy-to-replace guide rod, the rocker can be quickly rotated so that the conveyor can move in a different direction.

Diecast Aluminum
The design of the robust, lightweight diecast aluminum and its compact size enables it to be installed in many different conveyor systems.

Unrestricted conveyor movement
The rocker is held in the OFF position (deactivated) by simply clipping a spring steel sheet onto it. The conveyed load can pass through the stop cylinder unobstructed while the rocker is in this position.



Stop Cylinder — Vertical Version

STVSR series



Integrated shock absorber for heavy conveyed loads

The built-in shock absorber stops the conveyed load in a gentle and precise manner without disturbing the load. Various shock absorbers are available depending on the weight of the conveyed load and the desired transport speed.

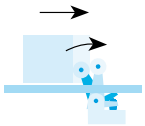

STVDR series



Roller for lower conveyed load weights

The piston rod with upward facing roller is lowered by applying compressed air once the conveyed load is on the ground. Afterwards, it is brought back into the upper end position by a return spring.

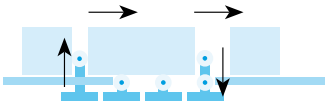

STVD series



Direct stopping piston rod for heavy conveyed loads

Reliably stops heavy conveyed loads at low transport speeds. Can also be used as a locking cylinder due to its solid piston rod.

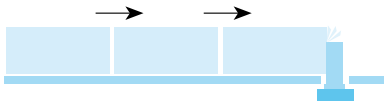

Stop Cylinder — Horizontal Version

STHSR series

Horizontal stop cylinder with shock absorber

Reliably stops heavy conveyed loads at high transport speeds. Well-suited for buffer areas.

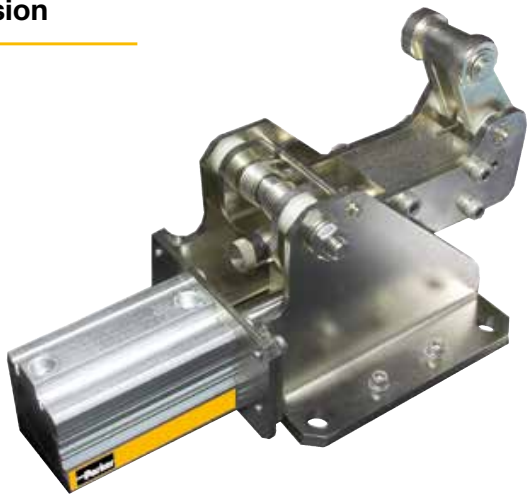

Pneumatic Stop Cylinders
Ø 50-80 mm
Available with hydraulic Industrial shock absorbers

Vertical Version:
- STVSR series
- STVDR series
- STVD series

Horizontal Version:
- STHSR series



Vertical versions

Vertical stop cylinder with shock absorber and roller lever



Cylinder Ø mm	Stroke (mm)	Order code
50	30	**STVSR-50-30-.-...**
80	40	**STVSR-80-40-.-...**

Vertical stop cylinder with roller



Cylinder Ø mm	Stroke (mm)	Order code
50	30	**STVDR-50-30-.-...**

Vertical stop cylinder with direct stopping piston rod



Cylinder Ø mm	Stroke (mm)	Order code
50	30	**STVD-50-30-.-...**

Horizontal versions

Horizontal stop cylinder with shock absorber and roller lever



Cylinder Ø mm	Stroke (mm)	Order code
50	50	**STHSR-50-50-.-...**

Pneumatic Circuit Diagrams

Single acting

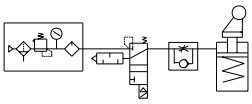

Double acting

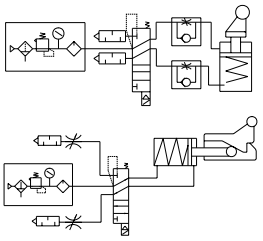

Specifications	Description
Medium	Filtered, unlubricated compressed air (if oil is used then it must be continued)
Operating pressure range	2 to 10 bar
Test pressure	15 bar
Ambient temperature range	0 °C to +65 °C (If intended for use below 0 °C consult Technical Sales)
Lubrication	Unlubricated
Cushioning	Cushioning mat made from oil-resistant rubber

Weight

Type STVSR-50-30	1.800 kg
Type STVSR-80-40	6.820 kg
Type STVDR-50-30	1.800 kg
Type STVD-50-30	1.800 kg
Type STHSR-50-50	8.750 kg

Tel: +45 63 12 83 00 | Email: ps@hymatik.com | www.hymatik.com | Hvidkaervej 27a, DK-5250 Odense SV, Denmark

STVSR Series - Stop cylinder Ø 50mm - Vertical version

Order Key

STVSR - 50 - 30 - L - STD

	Shock absorber strength
L	Light 50 - 150 kg
H	High 150 - 300 kg

	Connecting thread
STD	Standard G1/8
NPT	National Pipe Thread 1/8"

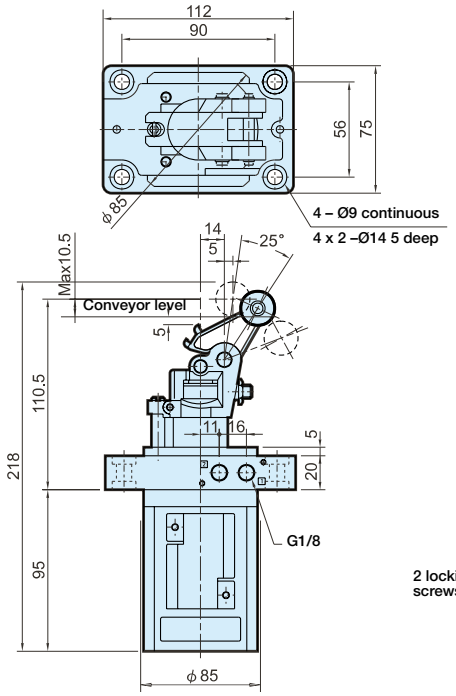

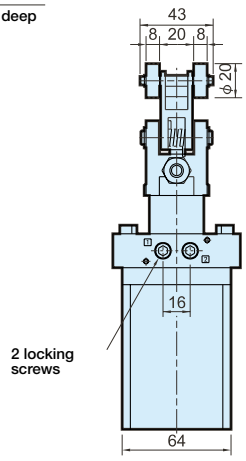

Option
- Rocker locking

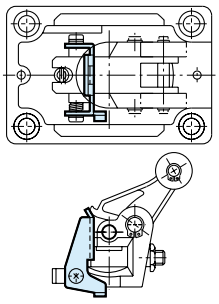

- Free travel of conveyed load

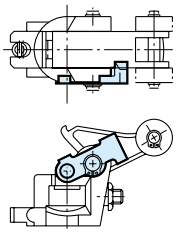

Loads - Moving mass subject to speed — Type STVSR-50-30

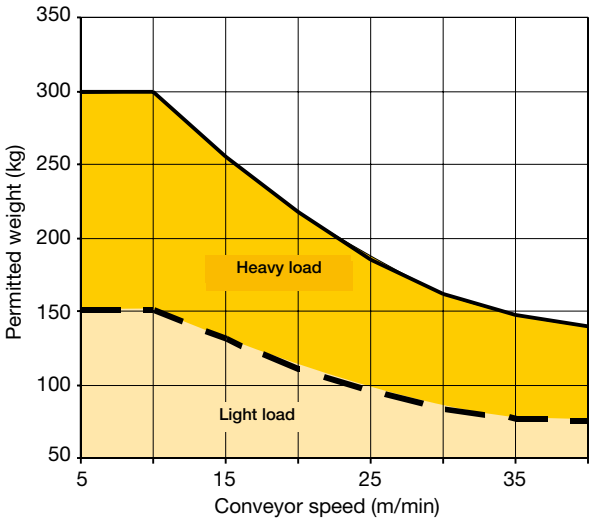

Axial load subject to operating pressure — Type STVSR-50-30

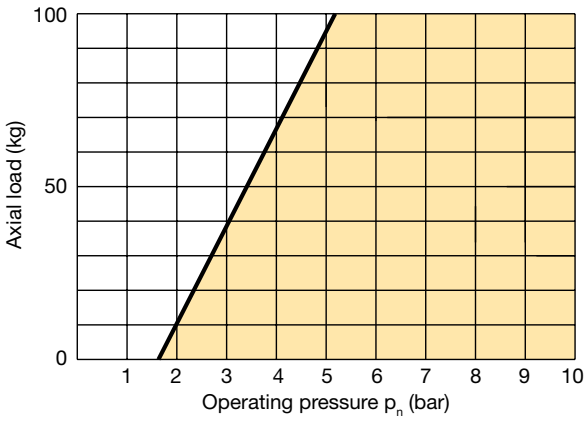

Tel: +45 63 12 83 00 | Email: ps@hymatik.com | www.hymatik.com | Hvidkaervej 27a, DK-5250 Odense SV, Denmark

STVSR Series - Stop cylinder Ø 80mm - Vertical version

Order Key

STVSR - 80 - 40 - STD

Note: Shock absorbers can set at 50 - 800kg

	Connecting thread
STD	Standard G1/4
NPT	National Pipe Thread 1/4"

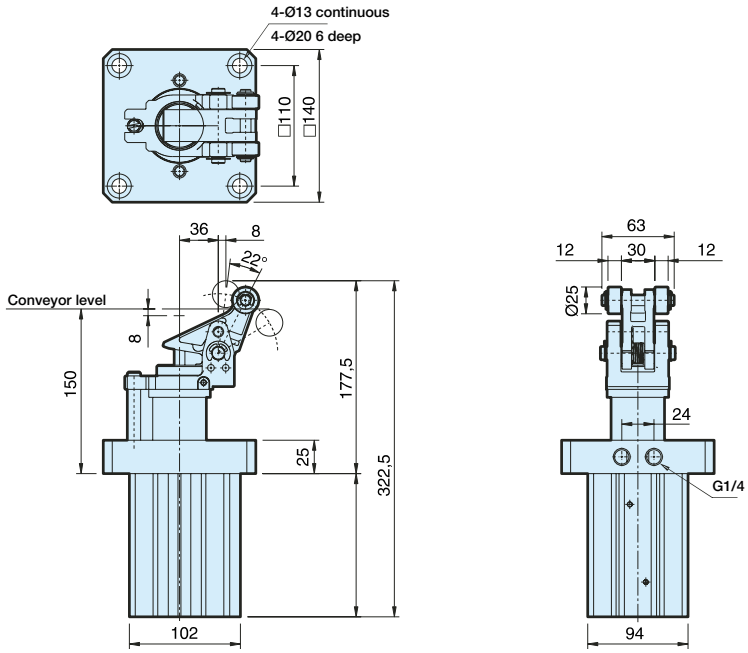

Loads - Moving mass subject to speed — Type STVSR-80-40

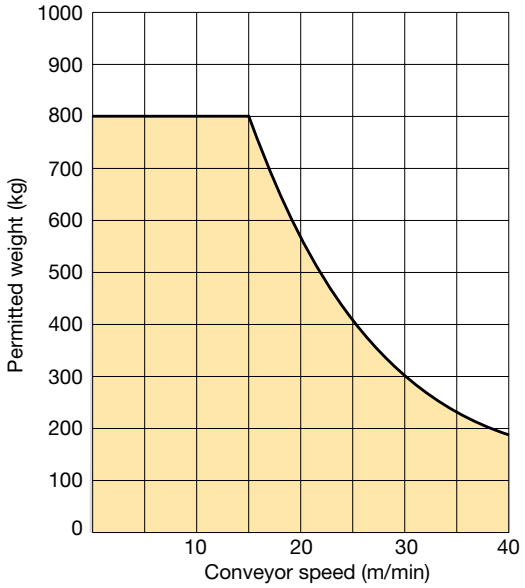

Axial load subject to operating pressure — Type STVSR-80-40

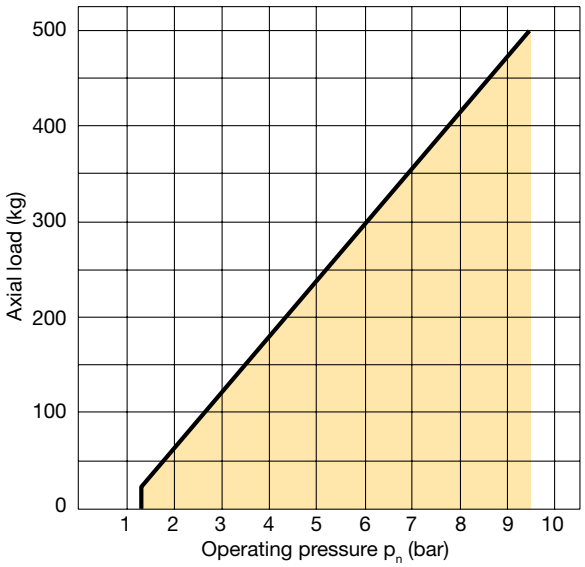

STVDR Series - Stop cylinder Ø 50mm - Vertical version

Order Key

STVDR - 50 - 30 - STD

	Connecting thread
STD	Standard G1/8
NPT	National Pipe Thread 1/8"

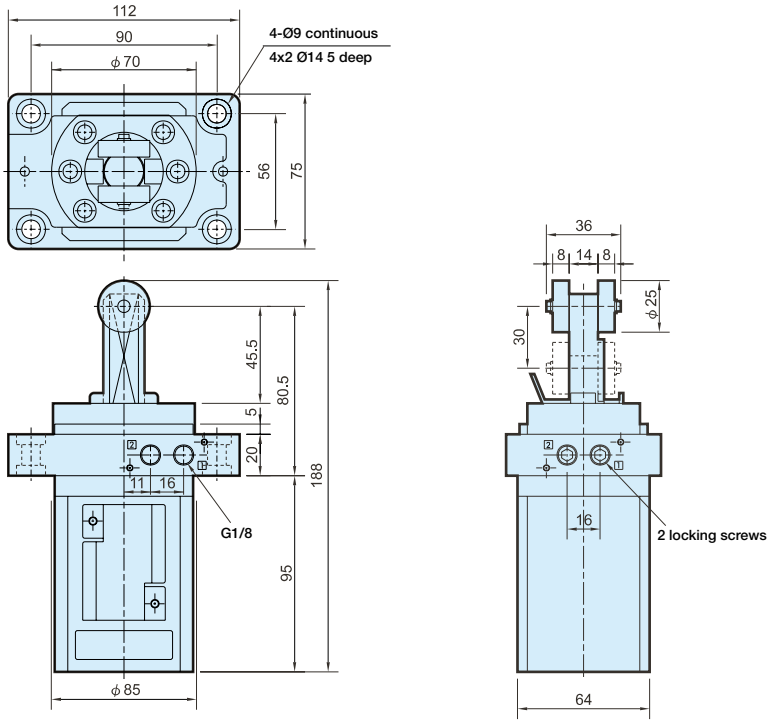

Loads - Moving mass subject to speed — Type STVDR-50-30

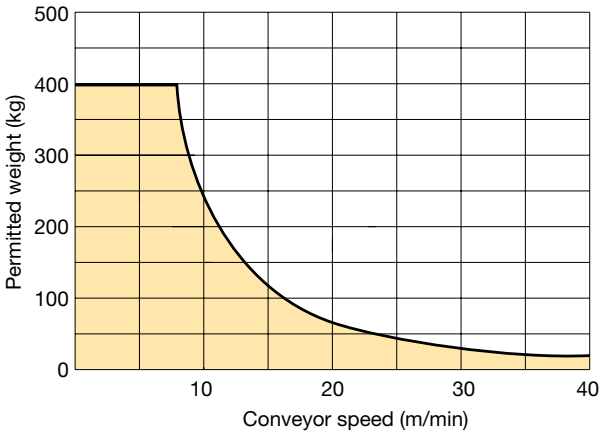

Axial load subject to operating pressure — Type STVDR-50-30

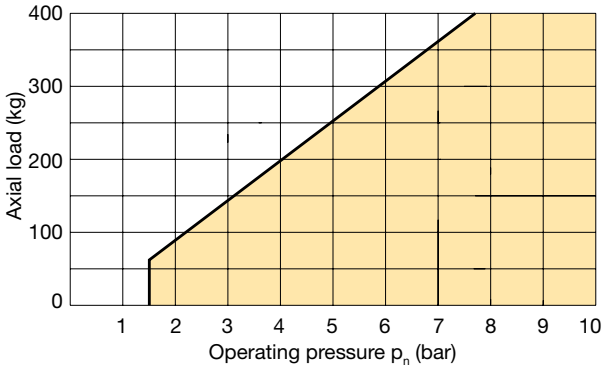

STVSR Series - Stop cylinder Ø 80mm - Vertical version

Order Key

STVD - 50 - 30 - STD

	Connecting thread
STD	Standard G1/8
NPT	National Pipe Thread 1/8"

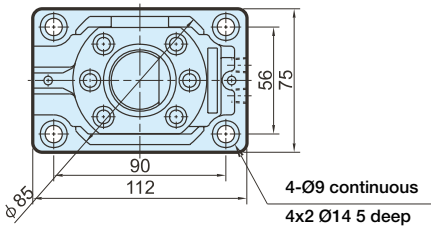

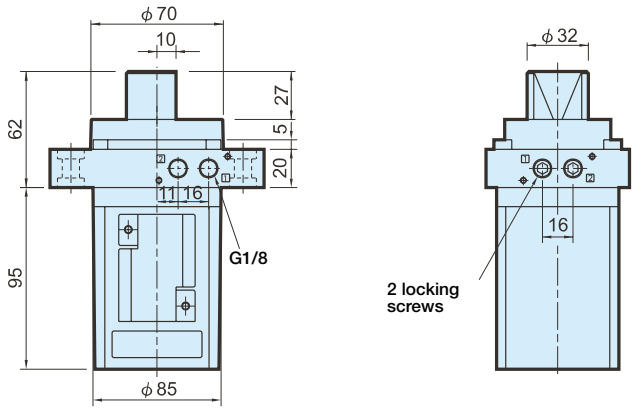

Loads - Moving mass subject to speed — Type STVD-50-30

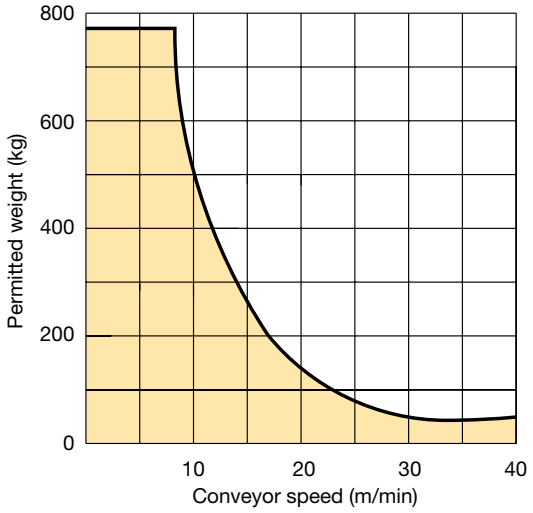

Axial load subject to operating pressure — Type STVD-50-30

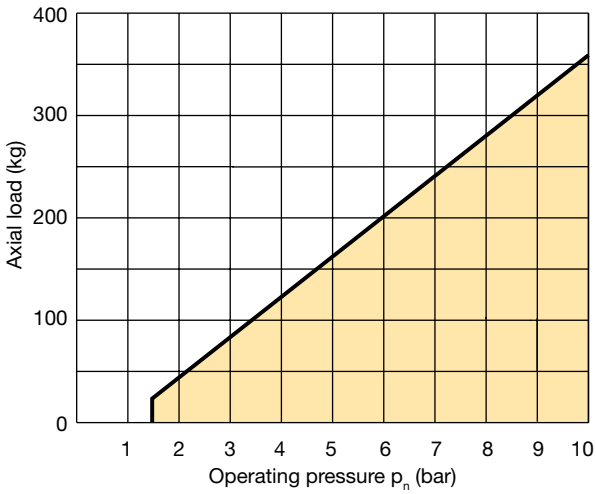

STHSR Series - Stop cylinder Ø 50mm - Horizontal version

Order Key

STHSR - 50 - 50 - STD

	Connecting thread
STD	Standard G1/4
NPT	National Pipe Thread 1/4"

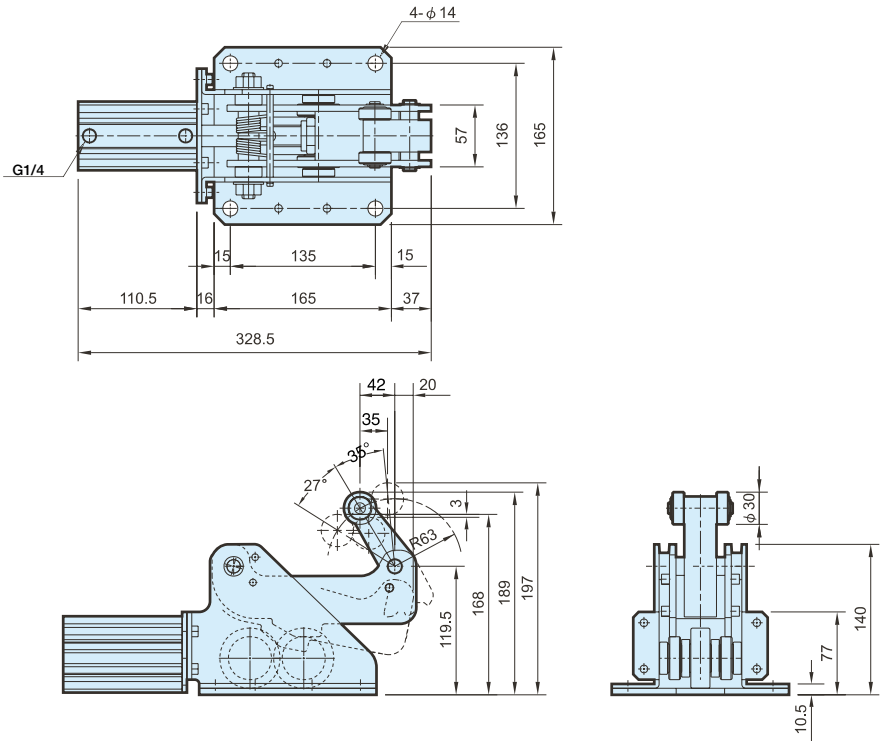

Loads - Moving mass subject to speed — Type STHSR-50-50

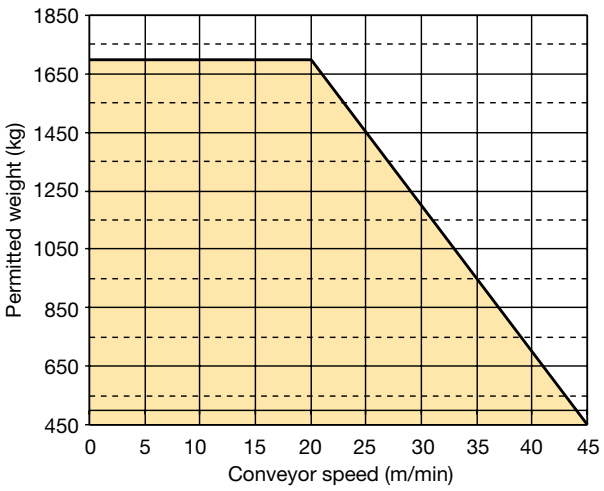

Axial load subject to operating pressure — Type STHSR-50-50

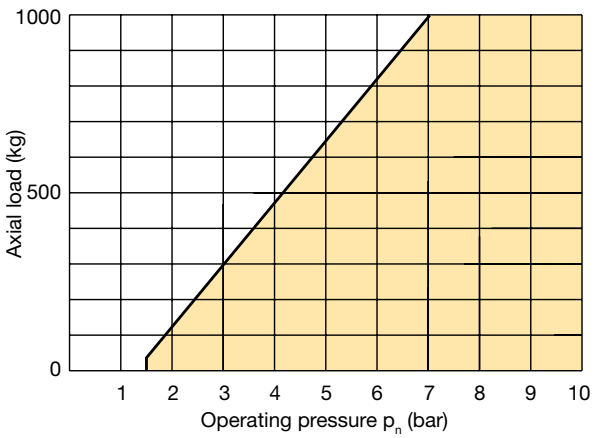

P5T cylinders are a modern and versatile range of cylinders with integral guides. The cylinders are double-acting, with end stop cushioning for quiet and vibration free operation. The strong guide shafts make it possible to adsorb considerable thrust forces and torque.



- Complete cylinder function with integral guidance
- Stainless steel guide rods
- Wide range of standard strokes, diameter 16-100 mm
- Flexible porting as standard
- Magnetic piston as standard with drop-in sensor technology
- End stop cushions as standard

Operating information

Working pressure	Max 10 bar
Working temperature	-20 °C to +80 °C

Prelubricated, further lubrication is not normally necessary.
If additional lubrication is introduced it must be continued.

For more information see www.parker.com/euro_pneumatic

Double acting - Plain bearing and top air connections

Ø16mm - (M5)

Stroke.mm	Order code
10	**P5T-C016DGSN010**
25	**P5T-C016DGSN025**
40	**P5T-C016DGSN040**
50	**P5T-C016DGSN050**
75	**P5T-C016DGSN075**
100	**P5T-C016DGSN100**

Ø20mm - (G1/8)

Stroke.mm	Order code
25	**P5T-C020DGSN025**
40	**P5T-C020DGSN040**
50	**P5T-C020DGSN050**
75	**P5T-C020DGSN075**
100	**P5T-C020DGSN100**
125	**P5T-C020DGSN125**

Ø25mm - (G1/8)

Stroke.mm	Order code
25	**P5T-C025DGSN025**
50	**P5T-C025DGSN050**
75	**P5T-C025DGSN075**
100	**P5T-C025DGSN100**
125	**P5T-C025DGSN125**
150	**P5T-C025DGSN150**

Ø32mm - (G1/8)

Stroke.mm	Order code
25	**P5T-C032DGSN025**
50	**P5T-C032DGSN050**
75	**P5T-C032DGSN075**
100	**P5T-C032DGSN100**
125	**P5T-C032DGSN125**
150	**P5T-C032DGSN150**
175	**P5T-C032DGSN175**
200	**P5T-C032DGSN200**

Ø40mm - (G1/8)

Stroke.mm	Order code
25	**P5T-C040DGSN025**
50	**P5T-C040DGSN050**
75	**P5T-C040DGSN075**
100	**P5T-C040DGSN100**
125	**P5T-C040DGSN125**
150	**P5T-C040DGSN150**
175	**P5T-C040DGSN175**
200	**P5T-C040DGSN200**

Ø50mm - (G1/4)

Stroke.mm	Order code
25	**P5T-C050DGSN025**
50	**P5T-C050DGSN050**
75	**P5T-C050DGSN075**
100	**P5T-C050DGSN100**
125	**P5T-C050DGSN125**
150	**P5T-C050DGSN150**
175	**P5T-C050DGSN175**
200	**P5T-C050DGSN200**

Ø63mm - (G1/4)

Stroke.mm	Order code
25	**P5T-C063DGSN025**
50	**P5T-C063DGSN050**
75	**P5T-C063DGSN075**
100	**P5T-C063DGSN100**
125	**P5T-C063DGSN125**
150	**P5T-C063DGSN150**
175	**P5T-C063DGSN175**
200	**P5T-C063DGSN200**

Ø80mm - (G3/8)

Stroke.mm	Order code
25	**P5T-C080DGSN025**
50	**P5T-C080DGSN050**
75	**P5T-C080DGSN075**
100	**P5T-C080DGSN100**
125	**P5T-C080DGSN125**
150	**P5T-C080DGSN150**
175	**P5T-C080DGSN175**
200	**P5T-C080DGSN200**

Ø100mm - (G3/8)

Stroke.mm	Order code
25	**P5T-C100DGSN025**
50	**P5T-C100DGSN050**
75	**P5T-C100DGSN075**
100	**P5T-C100DGSN100**
125	**P5T-C100DGSN125**
150	**P5T-C100DGSN150**
175	**P5T-C100DGSN175**
200	**P5T-C100DGSN200**

Tel: +45 63 12 83 00 | Email: ps@hymatik.com | www.hymatik.com | Hvidkaervej 27a, DK-5250 Odense SV, Denmark

Design Variants

In addition to the standard designs, a number of variants of the P5T range are available to special order, to provide effective solutions in a large number of applications.

Cylinders with special strokes
Cylinders with two fixing plates
Cylinders with adjustable stops, with cushioning
High-temperature cylinders for the temperature range of -10°C to +150°C (not magnetic piston).

Special design for food industry applications

There is a special version of the P5T for food industry applications and other installation cases where high corrosion resistance and hygiene are required. This version has steel parts and other components in either stainless steel or special treated aluminium.
Please contact Customer Service for more information.

Plain bearing or recirculating ball bearings

The P5T is supplied with plain bearings as standard. This type of bearing has guide rods of greater diameter, providing excellent support for heavy loads, especially static loads. Plain bearings are highly tolerant of vibration and dirt, and are suitable for regular cleaning.
Recirculating ball bearings are used for applications which require high precision and low friction.

The choice should be based on the following factors:

Application requirements	Plain bearing	Recirculating ball bearings
Precision	Good	Excellent
Friction	Higher	Low
Coefficient of friction	Variable	Constant
Precision during service life	Variable	Constant
Static load capacity	Excellent	Good
Dynamic load capacity	Good, but with friction losses	Good
Vibration tolerance	Excellent	Average
Dirt tolerance	Excellent	Poor
Washing tolerance	Excellent	Poor

Double acting, connections on top.



Double acting with two fixing plates, side connections are recommended.



Double acting, connections at rear.



Double acting with two fixing plates and adjustable end stops with cushioning, side connections are recommended.



Double acting, connections on side.



Double acting with one fixing plate adjustable end stops with cushioning, connections on side, on top or at rear.



Tel: +45 63 12 83 00 | Email: ps@hymatik.com | www.hymatik.com | Hvidkaervej 27a, DK-5250 Odense SV, Denmark

Dimensions, P5T basic cylinder

Connection option **D**
(connection from the top

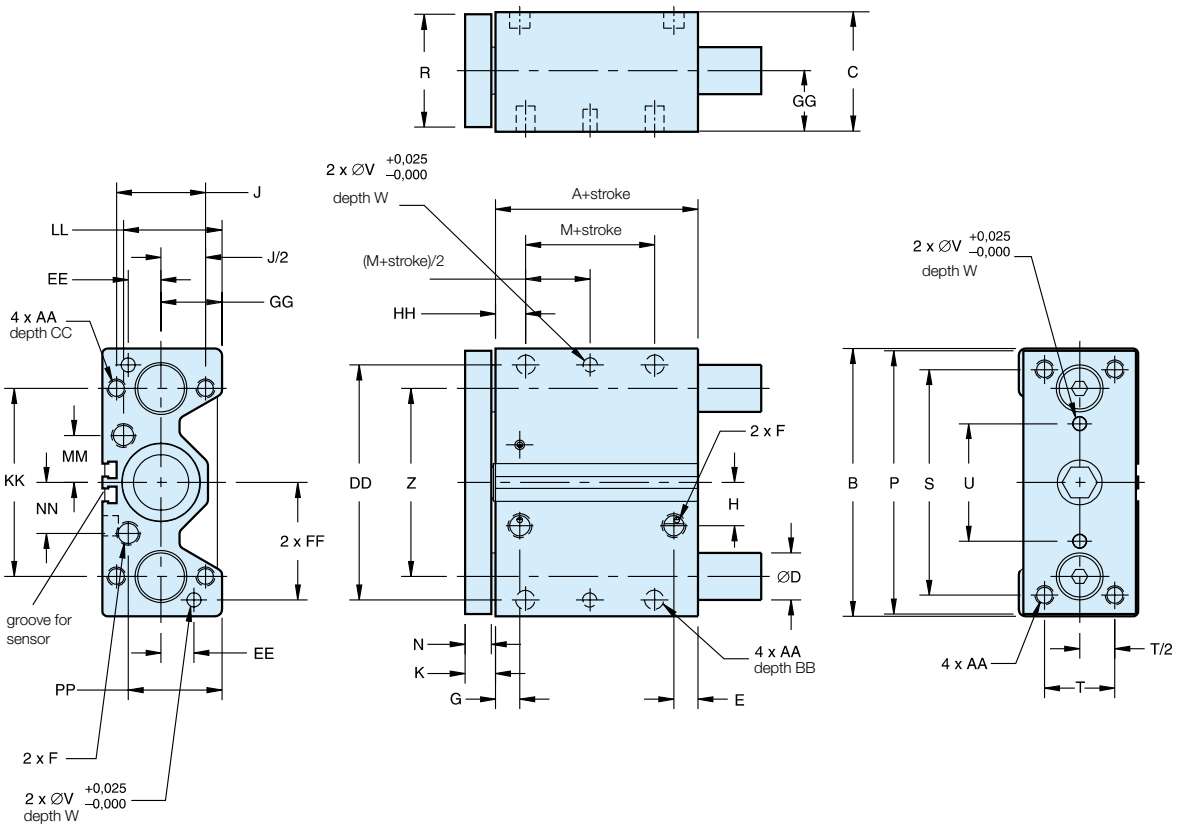

Cylinder diam. mm	A mm	B mm	C mm	D1*) mm	D2*) mm	E mm	F	G mm	H mm	J mm	K mm	M mm	N mm	P mm	R mm	S mm	T mm	U mm	V mm
16	37,8	64	31	8	10	10,1	M5	10,1	7	22	9,9	7	7,9	62	25,4	52	16	20	3
20	35	74	36	10	12	19	G1/8	10	15,8	26	9,9	10	7,9	72	31,8	60	18	30	4
25	38	88	42	12	16	21	G1/8	11,4	15,5	32	9,9	10	7,9	86	38	70	26	34	4
32	36	114	51	16	20	10,3	G1/8	10,4	18,4	38	13,1	5	11,1	112	44,5	96	30	50	6
40	44	124	51	16	20	12,1	G1/8	14,9	22,5	38	13,1	10	11,1	122	44	106	30	60	6
50	44,9	140	62	20	25	14,5	G1/4	16,1	27	44	14,7	10	12,7	138	57	120	40	60	8
63	50,1	150	75	20	25	16,4	G1/4	14,5	33	44	14,7	10	12,7	148	70	130	50	72	8
80	59,5	188	95	25	30	17,5	G3/8	19	37	56	18	15	16	185	88,9	160	60	92	10
100	66**)	224	115	30	35	21,9**)	G3/8	23	40	62	18	15	16	221	108	190	80	114	10

Cylinder diam. mm	W mm	Z mm	AA	BB mm	CC mm	DD mm	EE mm	FF mm	GG mm	HH mm	KK mm	LL mm	MM mm	NN mm	PP mm	Piston rod Ø mm
16	6	42	M5x0,8	7,5	10	54	8	27	15	13,1	42	22,5	11,3	9,7	23	8
20	6	52	M5x0,8	7,5	10	64	10	32	17	13,1	52	26	15,4	15,4	26	10
25	6	62	M6x1,0	10	12	76	11	38	21	14,1	62	33,4	17	17	33,4	10
32	6	80	M8x1,25	11	16	100	14	50	26	12,9	80	42	20	21,7	38	16
40	6	90	M8x1,25	11	16	110	14	55	26	13,9	90	41	24	26,4	37,9	16
50	8	100	M10x1,5	12	20	124	16	62	30	14,3	100	51	29	33	44	20
63	8	110	M10x1,5	15	20	132	18	66	36,5	16,3	110	62	36	37,8	57,8	20
80	10	140	M12x1,75	18	24	166	22	83	46,5	21	140	78	45	48	75,5	25
100	10	170	M14x2,0	21	28	200	24	100	56,5	25	170	91,5	53	51	95.5	25

Length tolerance ± 1 mm
Stoke tolerance + 1.5/0 mm
**) Stroke 25 mm, A=75 mm, E=28 mm

*) D1 = bearing rod diameter for recirculating ball bearing
*) D2 = bearing rod diameter for plain bearing

Tel: +45 63 12 83 00 | Email: ps@hymatik.com | www.hymatik.com | Hvidkaervej 27a, DK-5250 Odense SV, Denmark

Dimensions, P5T basic cylinder

Standard lengths

Cylinder diam mm	Stroke mm	L mm
16	10	36,2
	25, 40, 50, 75	60,2
	100	75,2
20	25, 40, 50, 75	66,9
	100, 125	91,9
25	25, 50, 75, 100	69,9
	125, 150	91,9
32	25, 50, 75, 100	77,9
	125, 150, 175, 200	116,0
40	25, 50, 75, 100	77,9
	125, 150, 175, 200	116,0
50	25, 50, 75, 100	84,0
	125, 150, 175, 200	124,1
63	25, 50, 75, 100	84,0
	125, 150, 175, 200	124,1
80	25, 50, 75, 100	101,8
	125, 150, 175, 200	140,0
100	25	122,8
	50, 75, 100	120,3
	125, 150, 175, 200	158,4

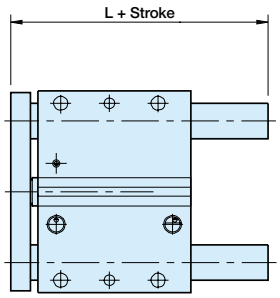

Dimensions, P5T basic cylinder

Connection option **S** (side connections)

Cylinder diam. mm	SS mm	TT mm	UU mm	F
16	24,1	10	20	M5
20	29,2	10	20	M5
25	35,2	11,4	25	M5
32	41,7	10,4	34	G1/8
40	41,7	14,9	34	G1/8
50	51,3	16,1	38	G1/4
63	60,7	15,6	41,8	G1/4
80	75,5	19	47	G3/8
100	83,7	23	53,3	G3/8

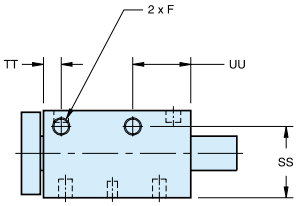

Please note that load capacity increases with two fixing plates, due to greater bearing distance.

Cylinder diam. mm	Guide rod dia, mm	X for option D mm	A mm	E mm	QQ mm	RR mm	XX mm
16	8	57,6	70,6	62,7	18,0	13,0	0
	10	57,6	70,6	62,7	24,0	13,0	1
20	10	54,9	67,9	59,9	24,0	13,0	1
	12	54,9	72,6	64,6	28,0	17,7	3
25	12	57,8	75,5	67,6	28,0	17,7	1
	16	57,8	77,5	69,6	34,0	19,7	4
32	16	62,2	81,9	70,8	34,0	19,7	0
	20	62,2	83,9	72,8	41,4	21,7	3,7
40	16	70,2	89,9	78,8	34,0	19,7	0
	20	70,2	91,9	80,8	41,4	21,7	3,7
50	20	74,3	96,0	83,3	41,4	21,7	0,7
	25	74,3	96,0	83,3	50,8	21,7	5,4
63	20	79,5	101,2	88,5	41,4	21,7	0,7
	25	79,5	101,2	88,5	50,8	21,7	5,4
80	25	95,5	117,2	101,2	50,8	21,7	1,4
	30	95,5	117,2	101,2	60,5	21,7	6,3
100	30	102,0	123,7	107,7	60,5	21,7	3,3
	35	102,0	123,7	107,7	65,0	21,7	5,5

Dimensions, P5T basic cylinder

Option **D**

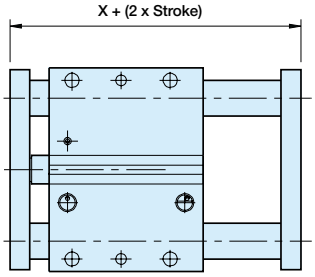

Dimensions, P5T with two fixing plates and adjustable end stop with cushioning

Option **A**

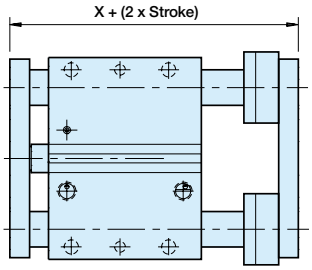

Dimensions, P5T with adjustable end stop with cushioning

Option **E**

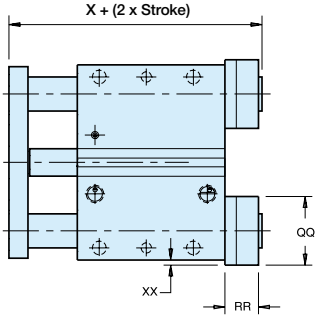

Tel: +45 63 12 83 00 | Email: ps@hymatik.com | www.hymatik.com | Hvidkaervej 27a, DK-5250 Odense SV, Denmark

Twin Rod Non Rotate Cylinders RDV and AZ

A range of twin rod cylinders designed for use in non rotate applications specifically suited to the handling and packaging environments. Offering a range of double acting cylinders with adjustable cushioning and magnetic variants.



RDV Series:



- Available as bore Ø 25mm
- Non rotating
- Double acting
- Adjustable cushioning
- Magnetic piston as standard

Operating information

Working pressure:	Max 10 bar
Working temperature:	-10°C to +70°C

Prelubricated, further lubrication is not normally necessary.
If additional lubrication is introduced it must be continued.

AZ Series:



- Available as bore Ø 32mm - Ø 100mm
- Non rotating
- Double acting
- Adjustable cushioning
- Magnetic piston as standard
- Drop in sensors

Operating information

Working pressure:	Max 10 bar
Working temperature:	-20°C to +80°C

Prelubricated, further lubrication is not normally necessary.
If additional lubrication is introduced it must be continued.

Tel: +45 63 12 83 00 | Email: ps@hymatik.com | www.hymatik.com | Hvidkaervej 27a, DK-5250 Odense SV, Denmark

Order key - RDV

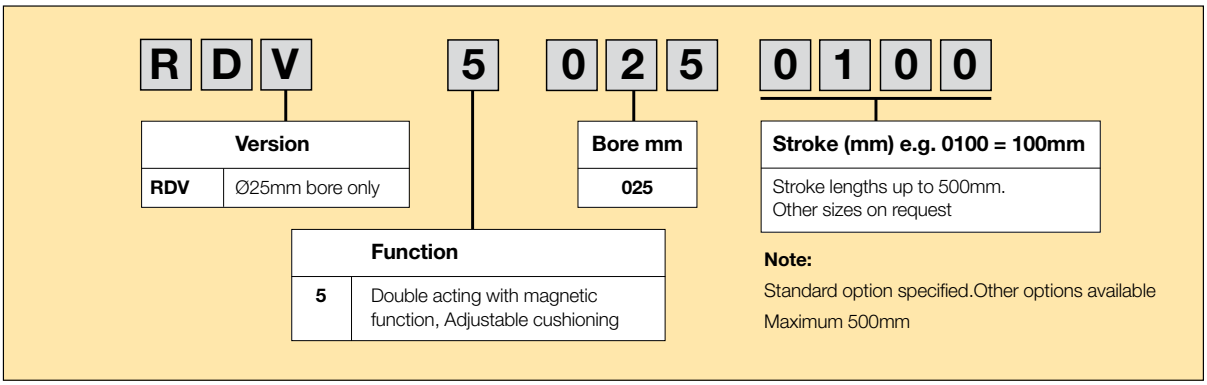

Version	
RDV	Ø25mm bore only

Function	
5	Double acting with magnetic function, Adjustable cushioning

Bore mm
025

Stroke (mm) e.g. 0100 = 100mm
Stroke lengths up to 500mm. Other sizes on request

Note:
Standard option specified.Other options available
Maximum 500mm

Order key - AZV, AZ3, AZ4

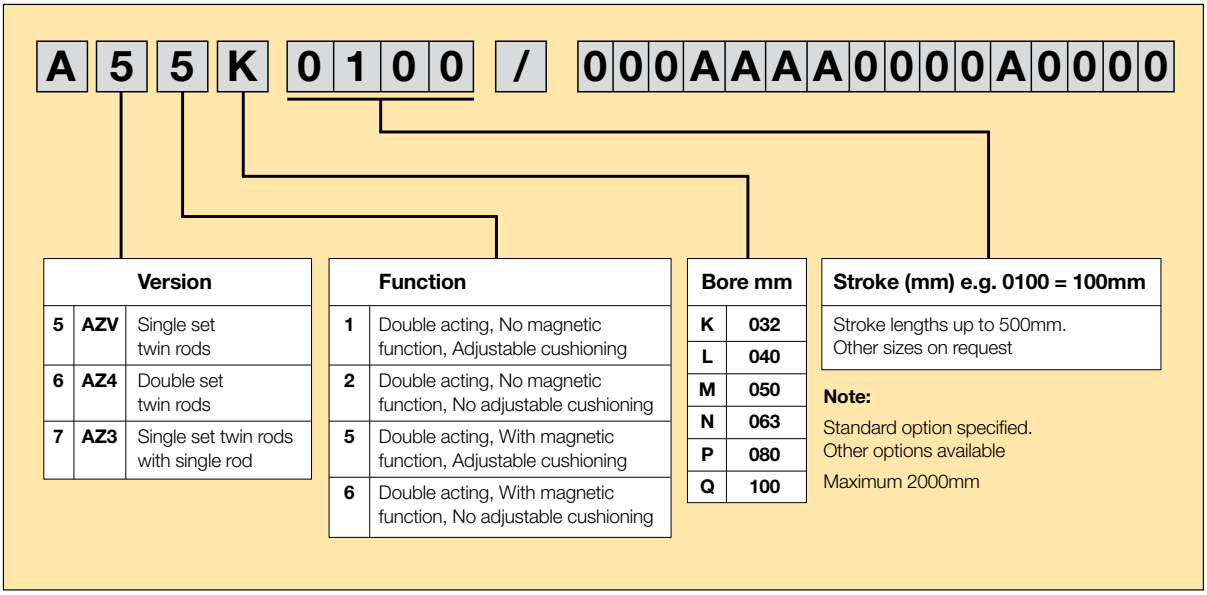

Version		
5	AZV	Single set twin rods
6	AZ4	Double set twin rods
7	AZ3	Single set twin rods with single rod

Function	
1	Double acting, No magnetic function, Adjustable cushioning
2	Double acting, No magnetic function, No adjustable cushioning
5	Double acting, With magnetic function, Adjustable cushioning
6	Double acting, With magnetic function, No adjustable cushioning

Bore mm	
K	032
L	040
M	050
N	063
P	080
Q	100

Stroke (mm) e.g. 0100 = 100mm
Stroke lengths up to 500mm. Other sizes on request

Note:
Standard option specified.
Other options available
Maximum 2000mm

Tel: +45 63 12 83 00 | Email: ps@hymatik.com | www.hymatik.com | Hvidkaervej 27a, DK-5250 Odense SV, Denmark

Twin Rod Cylinder Cylinder Mounts

Body Mounts	RDV	AZV / AZ3 / AZ4 Bore Ø					
	25mm	32mm	40mm	50mm	63mm	80mm	100mm
Foot mounting - MS3 / MS1	**KK28.302**	**PD27917**	**PD27918**	**PD28072**	**PD28073**	**PD28074**	**PD28075**
Rear Double Clevis - AB3 / MP2	**KZ1420**	**PD22704**	**PD22705**	**PD22706**	**PD22707**	**PD22708**	**PD22709**
Rear Single Clevis - MP4	**-**	**PD23412**	**PD23413**	**PD23414**	**PD23415**	**PD23416**	**PD23417**
Front Flange - Type MF1 for AZV / AZ3 / AZ4	**-**	**PD57042**	**PD57043**	**PD57044**	**PD57045**	**PD57046**	**PD57047**
Rear Flange - MF2	**-**	**PD23403**	**PD23404**	**PD23405**	**PD23406**	**PD23407**	**PD23408**
Trunnion - MT4	**-**	**PD39195**	**PD39196**	**PD39197**	**PD39198**	**PD39199**	**PD39200**
Trunnion Blocks - MT4	**-**	**PD23381**	**PD23382**	**PD23382**	**PD23383**	**PD23383**	**PD23384**
Pivot Mount - (w / o Bolts)	**-**	**PD25621**	**PD25622**	**PD25623**	**PD25624**	**PD25625**	**PD25626**
Groove Nut - for RDV5	**ZP2125**						

Delivery information: All mounts are sold separately and are not mounted for shipment, except for the trunnion mount which requires factory installation.

Rod Accessories	AZ3 Bore Ø					
	32mm	40mm	50mm	63mm	80mm	100mm
Rod Nut	**ZP 1810**	**ZP 2189**	**ZP 0178**	**ZP 0178**	**ZP 0185**	**ZP 0185**
Rod Clevis AP2	**KY 6135**	**KY 6136**	**KY 6139**	**KY 6139**	**KY 6141**	**KY 6141**
Rod Eye AP6	**KY 6147**	**KY 6148**	**KY 6150**	**KY 6150**	**KY 6151**	**KY 6151**
Clevis Pin	**KY 6153**	**KY 6154**	**KY 6157**	**KY 6156**	**KY 6158**	**KY 6159**
Flexo coupling	**KY 1129**	**KY 1131**	**KY 1133**	**KY 1133**	**KY 1134**	**KY 1134**

Weights (kg)

	RDV		AZV Bore Ø											
	25mm		32mm		40mm		50mm		63mm		80mm		100mm	
	*1	*2	*1	*2	*1	*2	*1	*2	*1	*2	*1	*2	*1	*2
Basic Cylinder	0.46	0.11	0.80	0.25	1.00	0.35	1.70	0.5	2.60	0.6	4.20	0.9	6.20	1.0
Type MS3 / MS1	0.10		0.95		1.19		2.04		2.99		4.99		7.20	
Type AB3 / MP2	0.08		0.87		1.09		1.87		2.82		4.69		6.94	
Type MP4			0.90		1.13		1.91		2.90		4.77		7.11	
Type MP6			0.90		1.15		1.92		2.92		4.76		7.06	
Type MF1 / MF2			0.90		1.15		1.92		2.92		4.76		7.06	
Type MT4			0.91		1.18		1.93		3.25		5.03		7.76	

	AZ3											
Basic Cylinder	1.0	0.30	1.5	0.45	2.5	0.7	3.2	0.85	5.3	1.3	7.5	1.5
Type MS1	0.95		1.19		2.04		2.99		4.99		7.20	
Type MF1 / MF2	0.90		1.15		1.92		2.92		4.76		7.06	
Type MT4	0.91		1.18		1.93		3.25		5.03		7.76	

	AZ4											
Basic Cylinder	1.0	0.30	1.4	0.40	2.3	0.6	3.2	0.9	5.6	1.4	7.4	1.50
Type MS1	1.15		1.59		2.64		3.59		6.39		8.40	
Type MT4	1.11		1.58		2.53		3.59		6.13		8.16	

*1 = Weight for cylinder with 100mm stroke
*2 = Weight for every additional 100mm stroke length

Tel: +45 63 12 83 00 | Email: ps@hymatik.com | www.hymatik.com | Hvidkaervej 27a, DK-5250 Odense SV, Denmark

Dimensions – Double acting, non-rotating, Ø 25 mm

Series RDV5...

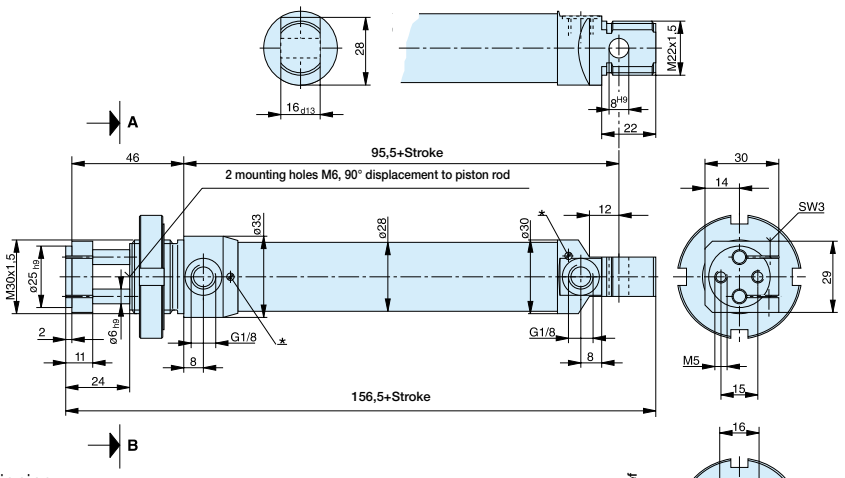

* adjustable end cushioning
Mounting nut is not included in delivery

Mounting instruction:
When mounting the front plate onto the piston rods tighten the screws with a torque M_a = 4 N.

Mountings – Series RDV...., Ø 25 mm

Dimensions (mm) – Foot mounting type MS3

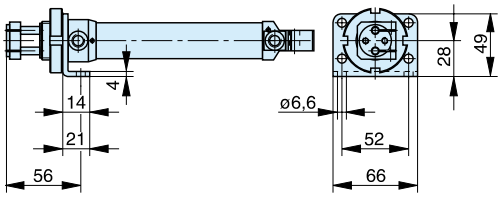

Material:
steel, passivated

Dimensions (mm) – Clevis bracket type AB3

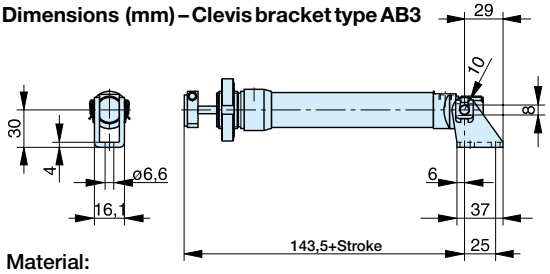

Material:
steel, passivated

Dimensions – Basic Cylinder, non-rotating, Series AZV...., Ø 32 – 100 mm

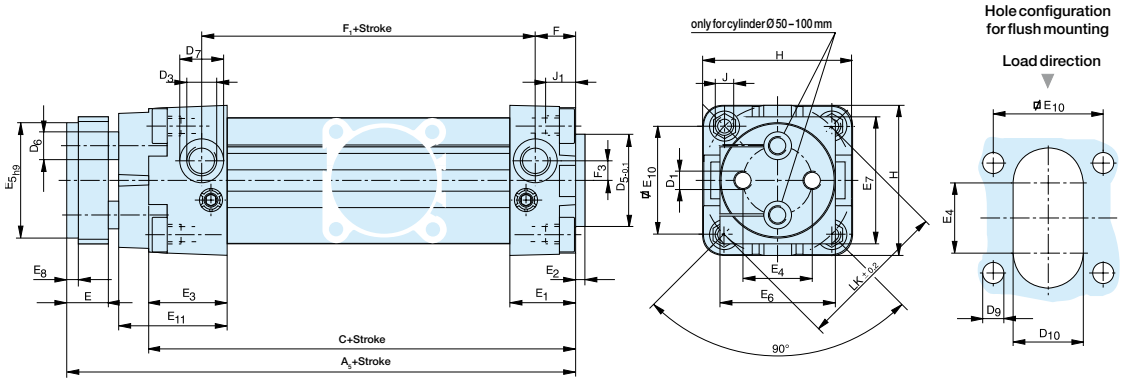

Dimension Table (mm) – Basic Cylinder AZV...., AZ3...., AZ4....

Cyl. Ø	A_5 + Stroke	A_9 + 2x Stroke	A_{10} + Stroke	A_{11} + 2x Stroke	C + Stroke	D_1	D2	D_3	$ØD_5$	$ØD_6$	$ØD_7$	$ØD_8$	$ØD_9$	D_{10}	E	E_1	E_2	E_3
32	128	154	146	154	102	M6	M10x1.25	G1/8	30	8	15	12	7	23	15	29	4	26
40	142	172	163	172	112	M8	M12x1.25	G1/4	35	10	19	16	7	25	15	27	4	30
50	151	188	177	185	117	M8	M16x1.5	G1/4	40	12	19	20	9	30	18	29	4	34
63	161	198	187	197	125	M10	M16x1.5	G3/8	45	16	23	20	9	34	22	30	4	34
80	174	220	206	212	136	M12	M20x1.5	G3/8	45	20	23	25	10	38	22	34	4	39
100	181	232	218	219	143	M12	M20x1.5	G1/2	55	20	28	25	10	38	22	35	4	40

Tel: +45 63 12 83 00 | Email: ps@hymatik.com | www.hymatik.com | Hvidkaervej 27a, DK-5250 Odense SV, Denmark

Dimensions – Basic Cylinder, non-rotating, with through piston rod, series AZ3...., Ø 32 – 100 mm

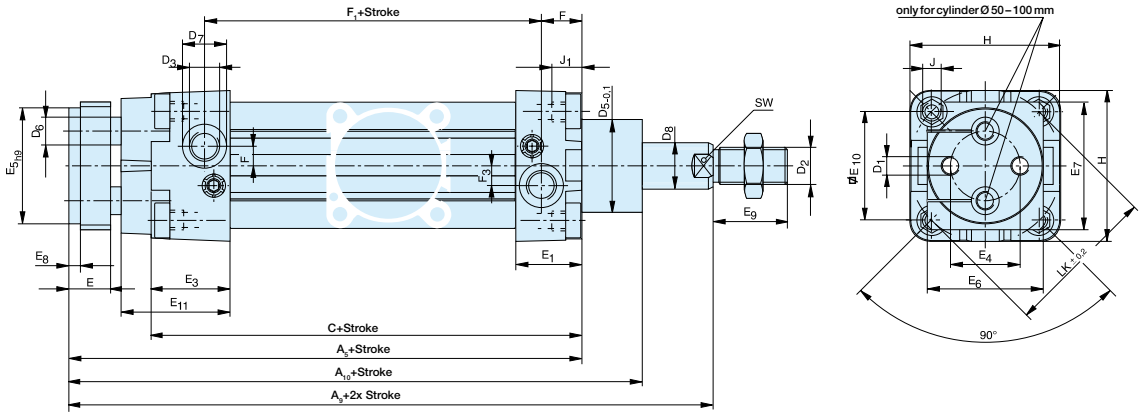

Dimensions – Basic Cylinder, non-rotating, with through piston rods, series AZ4...., Ø 32 – 100 mm

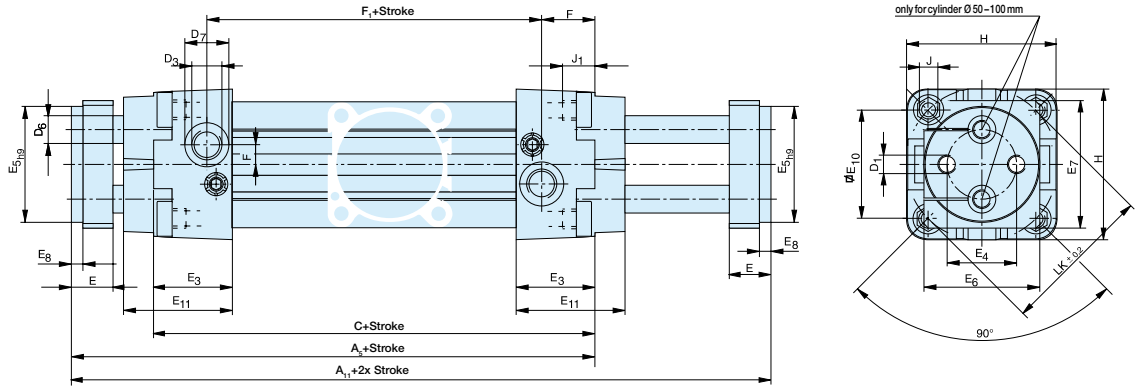

Dimension Table (mm) – Basic Cylinder AZV...., AZ3...., AZ4....

Cyl. Ø	A_5 + Stroke	A_9 + 2x Stroke	A_{10} + Stroke	A_{11} + 2x Stroke	C + Stroke	D_1	D2	D_3	$ØD_5$	$ØD_6$	$ØD_7$	$ØD_8$	$ØD_9$	D_{10}	E	E_1	E_2	E_3
32	128	154	146	154	102	M6	M10x1.25	G1/8	30	8	15	12	7	23	15	29	4	26
40	142	172	163	172	112	M8	M12x1.25	G1/4	35	10	19	16	7	25	15	27	4	30
50	151	188	177	185	117	M8	M16x1.5	G1/4	40	12	19	20	9	30	18	29	4	34
63	161	198	187	197	125	M10	M16x1.5	G3/8	45	16	23	20	9	34	22	30	4	34
80	174	220	206	212	136	M12	M20x1.5	G3/8	45	20	23	25	10	38	22	34	4	39
100	181	232	218	219	143	M12	M20x1.5	G1/2	55	20	28	25	10	38	22	35	4	40

Cyl. Ø	$ØE_4$	$E_{5\,h9}$	E_6	E_7	E_8	E_9	E_{10}	E_{11}	F AZV, AZ3	F AZ4	F_1+Stroke AZV, AZ3	F_1+Stroke AZ4	F_3 AZV, AZ4	F_3 AZ3	F_4	J	J_{1max}	H	ØLK	SW
32	19	32	32	40	4	20	32.5	34	14.5	17.5	74	75	6	6	6	M6	16	47	46	10
40	22.5	40	40	45	4	24	38	42	16	19	77.5	75	7	7	7	M6	16	53	54	14
50	30	50	50	55	5	32	46.5	47	17.5	23	77	72	9.5	9.5	9.5	M8	16	65	66	17
63	38	63	63	70	5	32	56.5	45	17.5	21.5	87	83	10	10	10	M8	16	75	80	17
80	50	80	80	95	5	40	72	52	20.5	26	90	85	9	9	9	M10	16	95	102	22
100	70	100	100	115	5	40	89	53	19	24.5	100	95	13	13	13	M10	16	115	126	22

Tel: +45 63 12 83 00 | Email: ps@hymatik.com | www.hymatik.com | Hvidkaervej 27a, DK-5250 Odense SV, Denmark

Mountings – Series AZV...., AZ3...., AZ4...., Ø 32 – 100 mm

Dimensions for foot mounting MS1

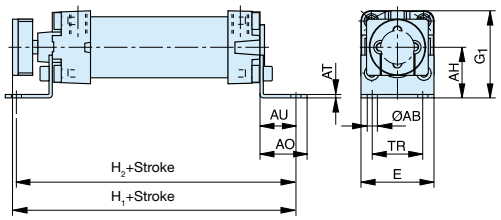

Material: steel, passivated

Dimension Table (mm)

Cyl. Ø	E	G_1	H_1 + Stroke	H_2 + Stroke	AH	ØAB	AO	AT	AU	TR
32	47	55.5	152	150	32	7	32	4	24	32
40	53	62.5	170	168	36	9	38	4	28	36
50	65	77.5	183	181	45	9	42	5	32	45
63	75	87.5	193	189	50	9	42	5	32	50
80	95	110.5	215	218	63	12	55	6	41	63
100	115	128.5	222	225	71	14	56	6	41	75

Included in delivery: 2 foot brackets, 4 screws

Dimensions for clevis bracket MP4

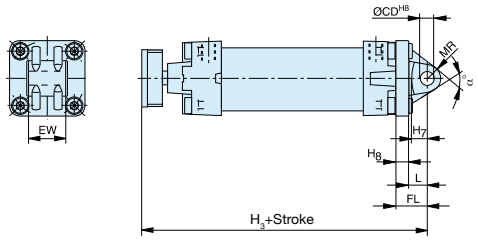

Material: cast aluminium

Dimension Table (mm)

Cyl. Ø	H_3 + Stroke	H_7	H_8	L	ØCD H8	FL	MR	EW	a°
32	150	10	10	12	10	22	10.5	26	60
40	167	13	10	15	12	25	13	28	60
50	178	12	11	16	12	27	13	32	70
63	193	17	11	21	16	32	17	40	60
80	210	16	15	21	16	36	17	50	70
100	222	20.5	16	25	20	41	21	60	70

Included in delivery: 1 clevis bracket, 4 screws

Dimensions for clevis bracket MP2

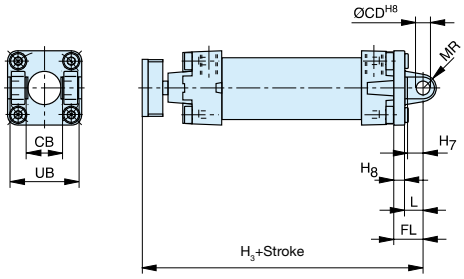

Material: cast aluminium

Dimension Table (mm)

Cyl. Ø	H_3 + Stroke	H_7	H_8	L	CB	ØCD H8	FL	MR	UB
32	150	10	10	12	26	10	22	9	45
40	167	13	10	15	28	12	25	11	52
50	178	12	11	16	32	12	27	12	60
63	193	17	11	21	40	16	32	15	70
80	210	16	15	22	50	16	36	16	90
100	222	20.5	16	25	60	20	41	20	110

Included in delivery: 1 rear trunnion mounting, 4 screws

Dimensions for Swivel eye bracket MP6
(Rear mounting with spherical bearing)

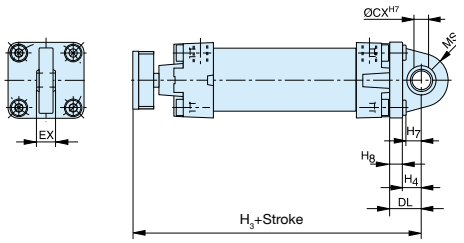

Material: cast aluminium

Dimension Table (mm)

Cyl. Ø	H_3 + Stroke	H_4	H_7	H_8	ØCX H7	DL	EX	MS
32	150	12	10	10	10	22	14	18
40	167	15	13	10	12	25	16	21
50	178	16	12	11	12	27	16	23
63	193	21	17	11	16	32	21	27
80	210	21	16	15	16	36	21	29
100	222	25	20.5	16	20	41	25	34

Included in delivery: 1 rear trunnion mounting with spherical bearing, 4 screws

Parker Hannifin Corporation
Pneumatic Division - Europe

Tel: +45 63 12 83 00 | Email: ps@hymatik.com | www.hymatik.com | Hvidkaervej 27a, DK-5250 Odense SV, Denmark

Mountings – Series AZV ...., AZ3...., AZ4...., Ø 32 – 100 mm

Dimensions for flange mouting MF2

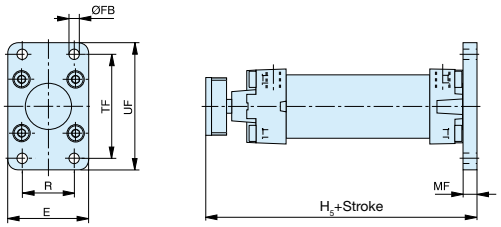

Material: cast aluminium

Dimensions for trunnion mounting MT4
(profile cylinder barrel version)

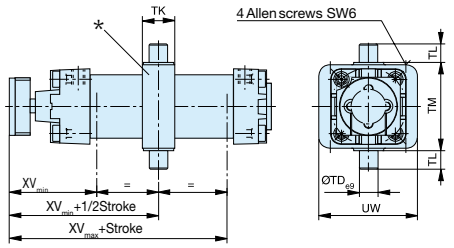

Material: cast aluminium

* Position trunnion mounting
Standard position: Type EN1 – The taps of the EN attachment are horizontally aligned to the air supply
Option: Type EN2 – The taps of the EN attachment are vertically aligned to the air supply

Dimension Table (mm)

Cyl. Ø	E	H_5 + Stroke	R	ØFB	MF	TF	UF
32	50	138	32	7	10	64	79
40	56	152	36	9	10	72	90
50	70	163	45	9	12	90	110
63	77	173	50	9	12	100	120
80	100	190	63	12	16	126	153
100	120	197	75	14	16	150	178

Included in delivery: 1 flange, 4 screws

Dimension Table (mm)

Cyl. Ø	ØTD e9	TK	TL	TM	UW	XV_{min}	XV	XV_{max}
32	12	25	12	50	65	64	76	87
40	16	28	16	63	75	75	87	99
50	16	28	16	75	85	84	95	106
63	20	36	20	90	100	89	101	112
80	20	36	20	110	120	96	109	121
100	25	48	25	132	135	99	112	125

Included in delivery: 1 rear trunnion mounting

After loosening the locking screws, the trunnion mounting is infinitely variable between XV_{min} and XV_{max}.

As standard, the position of the T-slots and dovetail slots is on the same side as the air connections. Exception: Ø 32 has only T-slots on the same side as the air connections, with a dovetail slot on the underside.

Mountings – Basic Cylinder, with through piston rod, series AZ3...., Ø 32 – 100 mm

Foot mounting MS1

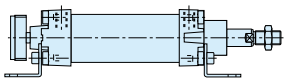

Rear flange mounting MF2

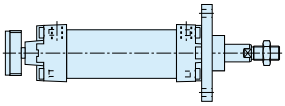

Trunnion mounting MT4

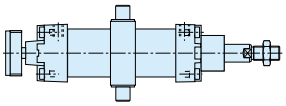

Mountings – Basic Cylinder, with through piston rods, series AZ4...., Ø 32 – 100 mm

Foot mounting MS1

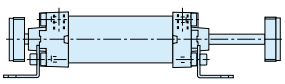

Trunnion mounting MT4

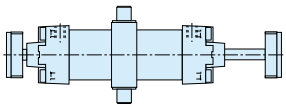









Industrial Shock Absorbers

Adjustable / Non-adjustable



Shock absorbers are hydraulic units that assist in bringing a moving load to rest, quickly and safely, without rebound or backward movement.

They provide a constant linear deceleration with the lowest possible reaction force in the shortest possible stopping time.

- Compact and heavy duty versions
- High energy absorption
- Low return force
- Long service life
- Increases productivity
- Reduces maintenance

Tel: +45 63 12 83 00 | Email: ps@hymatik.com | www.hymatik.com | Hvidkaervej 27a, DK-5250 Odense SV, Denmark

Smooth, Controlled Stopping of Moving Loads

Parker shock absorbers prevent damage to moving parts and to machines and plant, destructive impact forces are absorbed by controlled linear deceleration.

Parker shock absorbers let you

- Increase operating speeds
- Increase operating loads
- Increase system performance
- Increase operating reliability
- Reduce stresses on equipment
- Reduce production costs
- Reduce noise levels

All moving parts in a production process have to be stopped without damage to themselves or to the stopping devices of the machines and plant.

The high impact forces have to be reduced in a controlled manner: to bring a moving load to a standstill, the kinetic energy generated by the movement has to be dissipated.
The heavier the moving load and the faster it moves, the higher the kinetic energy.
In automation especially, shorter and shorter cycle times are demanded, so that stopping times are greatly reduced while kinetic energy levels are dramatically increased. These again have to be dissipated in a controlled manner.
Some commonly used stopping devices such as springs, rubber buffers or dashpots actually increase shock loading instead of reducing it - they do not dissipate energy at a uniform rate.

For smooth dissipation of the kinetic energy we recommend the use of hydraulic shock absorbers. Parker shock absorbers convent the kinetic energy generated by the deceleration of the load into thermal energy.
Optimum operating conditions are achieved if the energy is dissipated almost uniformly, i.e. if the moving mass is brought to a halt in the shortest distance, in the shortest time and without sudden peak loads during the stroke.

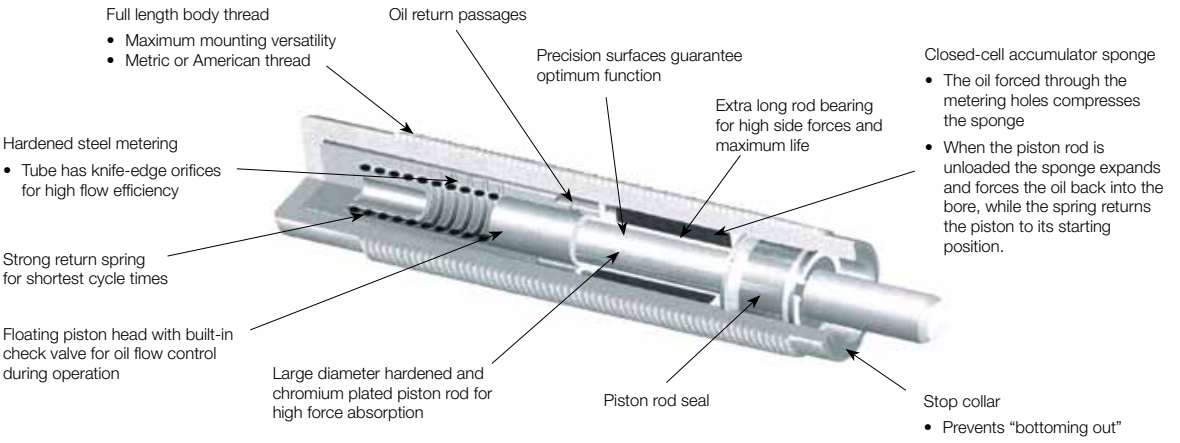

A wide range of applications

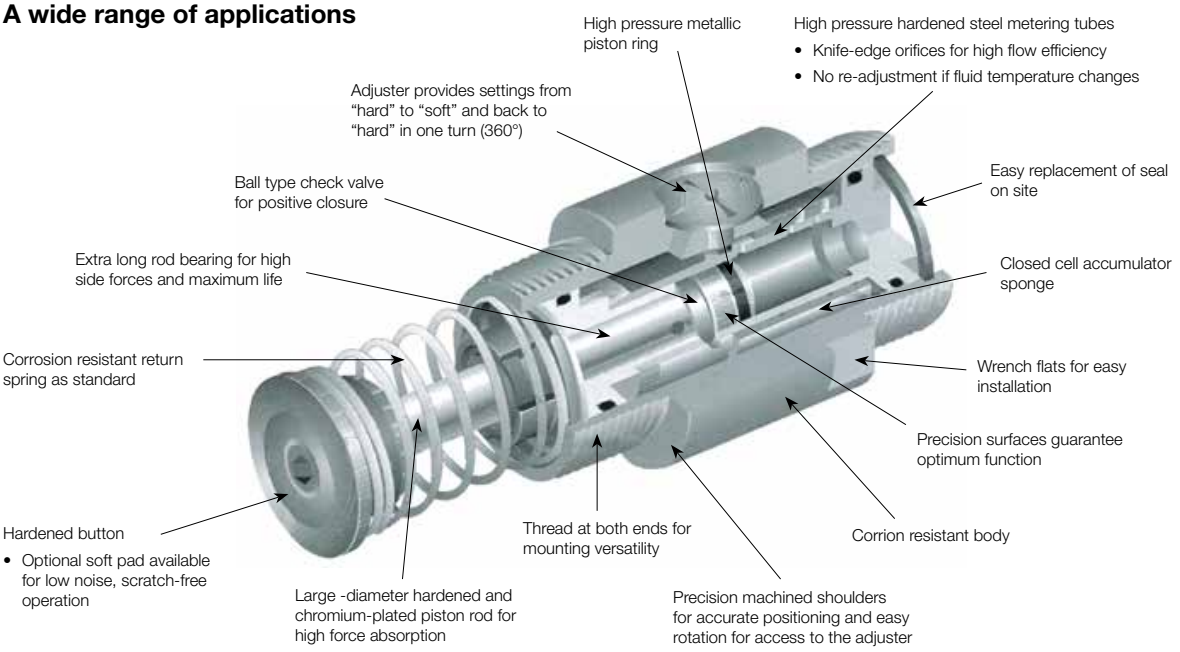

Tel: +45 63 12 83 00 | Email: ps@hymatik.com | www.hymatik.com | Hvidkaervej 27a, DK-5250 Odense SV, Denmark

Shock absorption

Ordinary shock absorbers, springs, buffers and pneumatic cushioning cannot match the performance of Parker shock absorbers. These shock absorbers match the speed and mass of the moving object and bring it smoothly and uniformly to rest. Springs and buffers, on the other hand, store energy rather than dissipate it. Although the moving object is stopped, it bounces back and this leads to fatigue in materials and components which can cause premature breakdown of the machine.
Pneumatic cushioning provides a better solution because the energy is actually converted, but because of the compressibility of air the maximum braking force is generated at the end of the stroke, which can lead to excessive loads on components.
Hydraulic dashpots also cause excessive loads because peak resistance comes at the beginning of the stroke and then quickly falls away. This generates unnecessarily high braking forces.

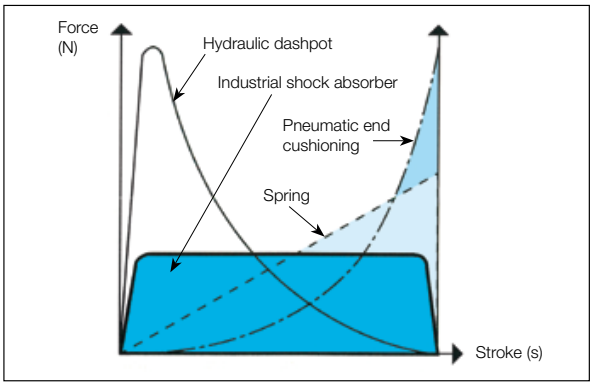

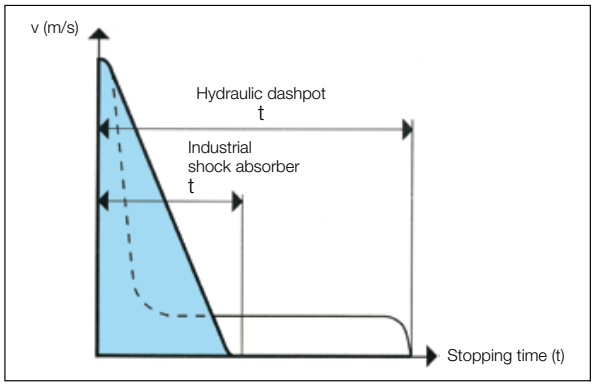

The Force/Stroke Diagram

clearly shows these effects. The shock absorber curve is ideal because all the energy is dissipated by linear deceleration without initial impact or final rebound.

Stopping time

Both damping units stop the same mass from the same speed with the same stroke. Therefore they do the same work but the industrial shock absorber reduces the stopping time by 60 to 70%.

Selection of Shock Absorber Type

Parker shock absorbers are available in two main types, to suit different applications and installation requirements. After selection of the appropriate type, sizing is determined by calculation.

Compact series with full-length body thread

This compact, space-saving series is available in adjustable and non-adjustable versions and can be installed in many different ways, e.g. in a tapped blind hole, in a tapped through hole, in a clearance hole in a flange or bracket, etc.



Universal series

This versatile, adjustable series with various mounting accessories is designed to stop heavier loads. It is especially suited to applications which require several of the same shock absorbers with the same stroke length.



Mounting methods

Parker shock absorbers are designed for a variety of mountings, which can be either built into machines or supplied as accessories.

Accumulators

Normally shock absorbers with internal accumulators are used. This simplifies installation by eliminating external piping and oil storage.
However, in applications with short cycle times and high kinetic energy the oil can become overheated. In this case an external accumulator should be used so that the oil can be cooled in the external circuit.

Shock absorber return stroke

- Piston rod with return spring combined with internal accumulator
- Return stroke actuated by compressed air or mechanically, combined with external accumulator. With this version a delayed return stroke is also possible.

Options

- Stop collars for front or rear mounting - these provide a positive stop to prevent damage caused by the piston “bottoming out”.
  They also allow precise setting of the stroke length.
- Soft pad for the hardened steel button - to avoid surface damage and reduce noise levels.

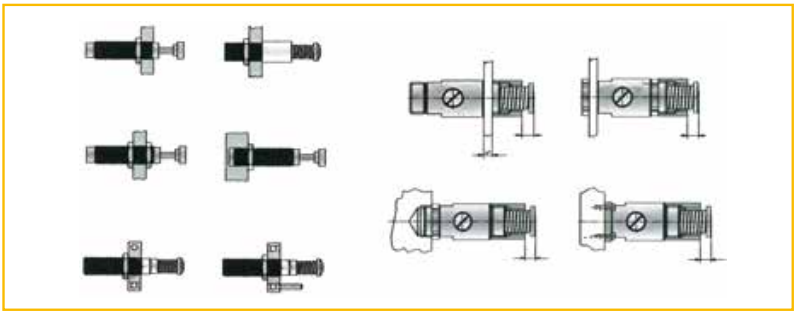

Non-Adjustable Shock Absorbers - SA Series

Type	Stroke [mm]	Effective Mass m_e [kg]		Max Energy Absorption [Nm]		Thread Size	Order code
		Min.	Max.	per stroke W_3	per hour W_4		
SA 10N	6,5	0,7	2,2	2,8	22500	M10x1	**7717FIL**
SA 10SN	6,5	1,8	5,4	2,8	22500	M10x1	**7718FIL**
SA 10S2N	6,5	4,6	13,6	2,8	22500	M10x1	**7721FIL**
SA 12N	10	0,3	1,1	9,0	28200	M12x1	**7719FIL**
SA 12SN	10	0,9	4,8	9,0	28200	M12x1	**7722FIL**
SA 12S2N	10	2,7	36,2	9,0	28200	M12x1	**7723FIL**
SA 14	12,5	0,9	10	17	34000	M14x1,5[1)]	**7720FIL**
SA 14S	12,5	8,6	86	17	34000	M14x1,5[1)]	**7927FIL**
SA 14S2	12,5	68	205	17	34000	M14x1,5[1)]	**7928FIL**
SA 20	12,5	2,3	25	25	45000	M20x1,5	**7930FIL**
SA 20S	12,5	23	230	25	45000	M20x1,5	**7937FIL**
SA 20S2	12,5	182	910	25	45000	M20x1,5	**7938FIL**
SAI 25	25,4	9	136	68	68000	M25x1,5	**7834FIL**
SAI 25S	25,4	113	1130	68	68000	M25x1,5	**7835FIL**
SAI 25S2	25,4	400	2273	68	68000	M25x1,5	**7836FIL**
SA 33x25	25,4	9	40	153	75000	M33x1,5	**8041FIL**
SA 33Sx25	25,4	30	120	153	75000	M33x1,5	**8042FIL**
SA 33S2x25	25,4	100	420	153	75000	M33x1,5	**8043FIL**
SA 33S3x25	25,4	350	1420	153	75000	M33x1,5	**8044FIL**
SA 33x50	50,8	18	70	305	85000	M33x1,5	**8045FIL**
SA 33Sx50	50,8	60	250	305	85000	M33x1,5	**8046FIL**
SA 33S2x50	50,8	210	840	305	85000	M33x1,5	**8047FIL**
SA 33S3x50	50,8	710	2830	305	85000	M33x1,5	**8048FIL**
SA 45x25	25,4	20	90	339	107000	M45x1,5	**8049FIL**
SA 45Sx25	25,4	80	310	339	107000	M45x1,5	**8050FIL**
SA 45S2x25	25,4	260	1050	339	107000	M45x1,5	**8051FIL**
SA 45S3x25	25,4	890	3540	339	107000	M45x1,5	**8052FIL**
SA 45x50	50,8	45	180	678	112000	M45x1,5	**8053FIL**
SA 45Sx50	50,8	150	620	678	112000	M45x1,5	**8054FIL**
SA 45S2x50	50,8	520	2090	678	112000	M45x1,5	**8055FIL**
SA 45S3x50	50,8	1800	7100	678	112000	M45x1,5	**8056FIL**
SA 45x75	76,2	70	270	1017	146000	M45x1,5	**8057FIL**
SA 45Sx75	76,2	230	930	1017	146000	M45x1,5	**8058FIL**
SA 45S2x75	76,2	790	3140	1017	146000	M45x1,5	**8059FIL**
SA 45S3x75	76,2	2650	10600	1017	146000	M45x1,5	**8060FIL**
SA 64x50	50,8	140	540	1695	146000	M64x2	**8061FIL**
SA 64Sx50	50,8	460	1850	1695	146000	M64x2	**8062FIL**
SA 64S2x50	50,8	1600	6300	1695	146000	M64x2	**8063FIL**
SA 64S3x50	50,8	5300	21200	1695	146000	M64x2	**8064FIL**
SA 64x100	101,6	270	1100	3390	192000	M64x2	**8065FIL**
SA 64Sx100	101,6	930	3700	3390	192000	M64x2	**8066FIL**
SA 64S2x100	101,6	3150	12600	3390	192000	M64x2	**8067FIL**
SA 64S3x100	101,6	10600	42500	3390	192000	M64x2	**8068FIL**
SA 64x150	150,1	410	1640	5084	248000	M64x2	**8069FIL**
SA 64Sx150	150,1	1390	5600	5084	248000	M64x2	**8070FIL**
SA 64S2x150	150,1	4700	18800	5084	248000	M64x2	**8071FIL**
SA 64S3x150	150,1	16000	63700	5084	248000	M64x2	**8072FIL**



[1)] Option: M14 x 1 thread

Tel: +45 63 12 83 00 | Email: ps@hymatik.com | www.hymatik.com | Hvidkaervej 27a, DK-5250 Odense SV, Denmark

Non-Adjustable Shock Absorbers - MC Series

Type	Stroke [mm]	Effective Mass m_e [kg]		Max Energy Absorption [Nm]		Thread Size	Order code
		Min.	Max.	per stroke W_3	per hour W_4		
MC9M1-B	5	0,6	3,2	1	2000	M6 x 0,5	**MC9M1-B**
MC9M2-B	5	0,8	4,1	1	2000	M6 x 0,5	**MC9M2-B**
MC10ML-B	5	0,3	2,7	0,5	4000	M8 x 1	**MC10ML-B**
MC10MH-B	5	0,7	5,0	0,5	4000	M8 x 1	**MC10MH-B**
MC25ML	6,6	0,7	2,2	2,8	22500	M10 x 1	**MC25ML**
MC25M	6,6	1.8	5,4	2,8	22500	M10 x 1	**MC25M**
MC25MH	6,6	4,6	13,6	2,8	22500	M10 x 1	**MC25MH**
MC75M-1	10	0,3	1,1	9	28200	M12 x 1	**MC75M-1**
MC75M-2	10	0,9	4,8	9	28200	M12 x 1	**MC75M-2**
MC75M-3	10	2,7	36,2	9	28200	M12 x 1	**MC75M-3**
MC150M	12,5	0,9	10	17	34000	M14 x 1,5	**MC150M**
MC150MH	12,5	8,6	86	17	34000	M14 x 1,5	**MC150MH**
MC150MH2	12,5	70	200	17	34000	M14 x 1,5	**MC150MH2**
MC225M	12,5	2,3	25	25	45000	M20 x 1,5	**MC225M**
MC225MH	12,5	23	230	25	45000	M20 x 1,5	**MC225MH**
MC225MH2	12,5	180	910	25	45000	M20 x 1,5	**MC225MH2**
MC600M	25,4	9	136	68	68000	M25 x 1,5	**MC600M**
MC600MH	25,4	113	1130	68	68000	M25 x 1,5	**MC600MH**
MC600MH2	25,4	400	2300	68	68000	M25 x 1,5	**MC600MH2**
MC3325M-1	25	9	40	155	75000	M33 x 1,5	**MC3325M-1**
MC3325M-2	25	30	120	155	75000	M33 x 1,5	**MC3325M-2**
MC3325M-3	25	100	420	155	75000	M33 x 1,5	**MC3325M-3**
MC3350M-1	50	18	70	310	85000	M33 x 1,5	**MC3350M-1**
MC3350M-2	50	60	250	310	85000	M33 x 1,5	**MC3350M-2**
MC3350M-3	50	210	840	310	85000	M33 x 1,5	**MC3350M-3**
MC4525M-1	25	20	90	340	107000	M45 x 1,5	**MC4525M-1**
MC4525M-2	25	80	310	340	107000	M45 x 1,5	**MC4525M-2**
MC4525M-3	25	260	1050	340	107000	M45 x 1,5	**MC4525M-3**
MC4550M-1	50	45	180	680	112000	M45 x 1,5	**MC4550M-1**
MC4550M-2	50	150	620	680	112000	M45 x 1,5	**MC4550M-2**
MC4550M-3	50	520	2090	680	112000	M45 x 1,5	**MC4550M-3**
MC4575M-1	75	70	270	1020	146000	M45 x 1,5	**MC4575M-1**
MC4575M-2	75	230	930	1020	146000	M45 x 1,5	**MC4575M-2**
MC4575M-3	75	790	3140	1020	146000	M45 x 1,5	**MC4575M-3**
MC6450M-1	50	140	540	1700	146000	M64 x 2	**MC6450M-1**
MC6450M-2	50	460	1850	1700	146000	M64 x 2	**MC6450M-2**
MC6450M-3	50	1600	6300	1700	146000	M64 x 2	**MC6450M-3**
MC64100M-1	100	270	1100	3400	192000	M64 x 2	**MC64100M-1**
MC64100M-2	100	930	3700	3400	192000	M64 x 2	**MC64100M-2**
MC64100M-3	100	3150	12600	3400	192000	M64 x 2	**MC64100M-3**
MC64150M-1	150	410	1640	5100	248000	M64 x 2	**MC64150M-1**
MC64150M-2	150	1390	5600	5100	248000	M64 x 2	**MC64150M-2**
MC64150M-3	150	4700	18800	5100	248000	M64 x 2	**MC64150M-3**







Non Adjustable Shock Absorbers - SC Series

Type	Stroke [mm]	Effective Mass m_e [kg]				Max Energy Absorption [Nm]		Thread Size	Order code
		Soft contact		Self compensating					
		Min.	Max.	Min.	Max.	per stroke W_3	per hour W_4		
SC925M-1	40	22	72	14	90	110	90000	M25 x 1,5	**SC925M-1**
SC925M-2	40	59	208	40	272	110	90000	M25 x 1,5	**SC925M-2**
SC925M-3	40	181	612	113	726	110	90000	M25 x 1,5	**SC925M-3**



Adjustable Shock Absorbers - SA Series

Type	Stroke [mm]	Effective Mass m_e [kg]		Max Energy Absorption [Nm]		Thread Size	Order code
		Min.	Max.	per stroke W_3	per hour W_4		
SA 1/4 x 1/2N	12,7	1,0	190	20	35000	M20x1,5	**7720FIL**
SA 3/8 x 1D	25,4	4,5	546	70	68000	M25x1,5[2)]	**7840FIL**
SALD 1/2 x 1M	25,4	4,5	1360	170	85000	M36x1,5	**7841FIL**
SALD 1/2 x 2M	50,8	9,5	2720	340	98000	M36x1,5	**7842FIL**
SA 1/2 x 1	25,4	4,5	1225	153	84700	M33x1,5	**7970FIL**
SA 1/2 x 2	50,8	9,5	2450	305	98300	M33x1,5	**7975FIL**
SA 3/4 x 1	25,4	9	8163	339	124300	M42x1,5	**7980FIL**
SA 3/4 x 2	50,8	16	14500	678	146800	M42x1,5	**7985FIL**
SA 3/4 x 3	76	23	20866	1017	180776	M42x1,5	**7986FIL**
SA 1 1/8 x 2	50,8	54	22680	1808	169478	M64x2,0	**7990FIL**
SA 1 1/8 x 4	102	73	45360	3616	225970	M64x2,0	**7995FIL**
SA 1 1/8 x 6	152	91	68040	5423	282463	M64x2,0	**7996FIL**
SA-A 3/4 x 1	25,4	27	3600	290	184000[3)]	M42x1,5	**7887FIL**
SA-A 3/4 x 2	50,8	43	6350	600	230000[3)]	M42x1,5	**7888FIL**
SA-A 3/4 x 3	76	55	9500	890	276000[3)]	M42x1,5	**7889FIL**
SA-A 1 1/8 x 2	50,8	72	13000	1380	345000[3)]	M64x2,0	**7880FIL**
SA-A 1 1/8 x 4	102	118	18200	2700	460000[3)]	M64x2,0	**7885FIL**
SA-A 1 1/8 x 6	152	200	32000	4150	575000[3)]	M64x2,0	**7886FIL**



[2)] Option: M27 x 3 thread [3)] Operation with external air-oil tank

Further shock absorbers sizes (1 1/2", 2", 2 1/4", 3", 4")
in various stroke lengths are also available on request.

For further technical data and accessories information regarding the SA-series please refer to shock absorber catalogue P-A4P018GB, for MC-SC- series please refer to catalogue PDE2524TCUK or contact your local Parker sales company.

Tel: +45 63 12 83 00 | Email: ps@hymatik.com | www.hymatik.com | Hvidkaervej 27a, DK-5250 Odense SV, Denmark











Air Motors

Tel: +45 63 12 83 00 | Email: ps@hymatik.com | www.hymatik.com | Hvidkaervej 27a, DK-5250 Odense SV, Denmark



Stainless Steel Air Motors P1V-S

An ideal choice for the food grade applications, and in all other ATEX applications where there is a risk of corrosion.



Designed for demanding applications and available in a wide variety of speeds and output torques. The all round, dirt-trap free design, stainless steel construction and FKM (DIN ISO 16299) external seals makes them the ideal choice for the Food Industry, where washdown with aggressive cleaning agents is common.

- Power from 0,02 kW to 1,2 kW
- ATEX CE Ex approved from 0,12 kW to 1,2 kW
- Keyed or threaded shaft
- No-lube intermittent operation as standard
- 0,2 kW, 0,3 and 1.2 kW Brakemotors for higher safety
- 0,28, 0,57 and 0.86 kW high torque series

Tel: +45 63 12 83 00 | Email: ps@hymatik.com | www.hymatik.com | Hvidkaervej 27a, DK-5250 Odense SV, Denmark

P1V-S is a range of air motors with all external components made of stainless steel, which means that they can be used in food grade applications, and in all other applications where there is a risk of corrosion.



- Power from 0,02 kW to 1,2 kW
- ATEX CE Ex approved from 0,12 kW to 1,2 kW
- Designed for arduous applications
- No-lube intermittent operation as standard

CE Ex II 2GD c IIC T6 (80 °C) X

CE Ex II 2GD c IIC T5 (95 °C) X

Operating information

Working presure : Max 6 bar in Ex area
Working temperature : -20° to +40°C in Ex area
Fluid: Compressed air with ISO 8573-1 Quality class 3.4.3 (no-lube operation) and 3.-.5 (lube operation)

Note : All technical data are based on a working pressure of 6 bar and with oil. For oil-free performances are -10 to 15% lower. Data tolerance accuracy -+10%

For details, see technical catalogue on web site : www.parker.com/euro_pneumatic

Keyed shaft, P1V-S012A series, 120 watt - (G1/8)

CE Ex II2GD cIIC T6 (80°C) X

Max output kW	Free speed rpm	Speed at max output r/min	Torque at max output Nm	Min start torque Nm	Air consumption at max output l/s	Conn.	Min pipe ID	Order code
0,12	22000	11000	0,10	0,15	5.0	G1/8	6	**P1V-S012A0N00**
0,12	5500	2750	0,40	0,60	5.0	G1/8	6	**P1V-S012A0550**
0,12	3600	1800	0,60	0,90	5.0	G1/8	6	**P1V-S012A0360**
0,12	1400	700	1,60	2,40	5.0	G1/8	6	**P1V-S012A0140**
0,12	900	450	2,50	3,80	5.0	G1/8	6	**P1V-S012A0090**
0,12	600	300	3,80	5,00*	5.0	G1/8	6	**P1V-S012A0060**
0,12	100	50	5,00*	5,00*	5.0	G1/8	6	**P1V-S012A0010**

Threaded shaft, P1V-S012D series, 120 watt - (G1/8)

CE Ex II2GD cIIC T6 (80°C) X

0,12	22000	11000	0,10	0,15	5.0	G1/8	6	**P1V-S012D0N00**
0,12	5500	2750	0,40	0,60	5.0	G1/8	6	**P1V-S012D0550**
0,12	3600	1800	0,60	0,90	5.0	G1/8	6	**P1V-S012D0360**
0,12	1400	700	1,60	2,40	5.0	G1/8	6	**P1V-S012D0140**
0,12	900	450	2,50	3,80	5.0	G1/8	6	**P1V-S012D0090**
0,12	600	300	3,80	5,00*	5.0	G1/8	6	**P1V-S012D0060**
0,12	100	50	5,00*	5,00*	5.0	G1/8	6	**P1V-S012D0010**

Keyed shaft, P1V-S020A series, 200 watt - (G1/8)

CE Ex II2GD cIIC T6 (80°C) X

0,20	14500	7250	0,26	0,40	6.2	G1/8	10	**P1V-S020A0E50**
0,20	4600	2300	0,80	1,20	6.2	G1/8	10	**P1V-S020A0460**
0,20	2400	1200	1,60	2,40	6.2	G1/8	10	**P1V-S020A0240**
0,20	1400	700	2,70	4,10	6.2	G1/8	10	**P1V-S020A0140**
0,20	700	350	5,40	8,20	6.2	G1/8	10	**P1V-S020A0070**
0,20	320	160	12,00	18,00	6.2	G1/8	10	**P1V-S020A0032**
0,10	180	90	10,50	15,00	4.5	G1/8	10	**P1V-S020A0018**
0,18	50	25	20,00*	20,00*	6.2	G1/8	10	**P1V-S020A0005**
0,18	20	-	20,00*	20,00*	6.2	G1/8	10	**P1V-S020A0002**
0,18	10	-	20,00*	20,00*	6.2	G1/8	10	**P1V-S020A0001**
0,18	5	-	20,00*	20,00*	6.2	G1/8	10	**P1V-S020A00005**

* Max allowed torque

Tel: +45 63 12 83 00 | Email: ps@hymatik.com | www.hymatik.com | Hvidkaervej 27a, DK-5250 Odense SV, Denmark

Reversible air motors

Threaded shaft, P1V-S020D series, 200 watt - (G1/8)

CE Ex II2GD cIIC T6 (80°C) X

Max output kW	Free speed rpm	Speed at max output r/min	Torque at max output Nm	Min start torque Nm	Air consumption at max output l/s	Conn.	Min pipe ID	Order code
0,20	14500	7250	0,26	0,40	6.2	G1/8	10	**P1V-S020D0E50**
0,20	4600	2300	0,80	1,20	6.2	G1/8	10	**P1V-S020D0460**
0,20	2400	1200	1,60	2,40	6.2	G1/8	10	**P1V-S020D0240**
0,20	1400	700	2,70	4,10	6.2	G1/8	10	**P1V-S020D0140**
0,20	700	350	5,40	8,20	6.2	G1/8	10	**P1V-S020D0070**
0,20	320	160	12,00	18,00	6.2	G1/8	10	**P1V-S020D0032**
0,10	180	90	10,50	15,00	4.5	G1/8	10	**P1V-S020D0018**
0,18	50	25	20,00*	20,00*	6.2	G1/8	10	**P1V-S020D0005**

Keyed shaft, P1V-S030A series, 300 watt - (G1/4)

CE Ex II2GD cIIC T6 (80°C) X

0,30	14500	7250	0,40	0,60	7.8	G1/4	10	**P1V-S030A0E50**
0,30	4600	2300	1,20	1,90	7.8	G1/4	10	**P1V-S030A0460**
0,30	2400	1200	2,40	3,60	7.8	G1/4	10	**P1V-S030A0240**
0,30	1400	700	4,10	6,10	7.8	G1/4	10	**P1V-S030A0140**
0,30	600	300	9,60	14,30	7.8	G1/4	10	**P1V-S030A0060**
0,30	340	170	16,90	25,30	7.8	G1/4	10	**P1V-S030A0034**
0,30	230	115	24,00	36,00	7.8	G1/4	10	**P1V-S030A0023**
0,13	180	90	13,80	21,00	4.7	G1/8	10	**P1V-S030A0018**
0,30	100	50	57,00	85,50	7.8	G1/4	10	**P1V-S030A0010**
0,30	50	25	36,00*	36,00*	7.8	G1/4	10	**P1V-S030A0005**

Threaded shaft, P1V-S030D series, 300 watt - (G1/4)

CE Ex II2GD cIIC T6 (80°C) X

0,30	14500	7250	0,40	0,60	7.8	G1/4	10	**P1V-S030D0E50**
0,30	4600	2300	1,20	1,90	7.8	G1/4	10	**P1V-S030D0460**
0,30	2400	1200	2,40	3,60	7.8	G1/4	10	**P1V-S030D0240**
0,30	1400	700	4,10	6,10	7.8	G1/4	10	**P1V-S030D0140**
0,30	600	300	9,60	14,30	7.8	G1/4	10	**P1V-S030D0060**
0,30	340	170	16,90	25,30	7.8	G1/4	10	**P1V-S030D0034**
0,13	180	90	13,80	21,00	4.7	G1/8	10	**P1V-S030D0018**
0,30	50	25	36,00*	36,00*	7.8	G1/4	10	**P1V-S030D0005**

Keyed shaft, P1V-S060A series, 600 watt - (G3/8)

CE Ex II2GD cIIC T6 (80°C) X

0,60	14000	7000	0,82	1,23	14.2	G3/8	12	**P1V-S060A0E00**
0,60	3500	1750	3,20	4,80	14.2	G3/8	12	**P1V-S060A0350**
0,60	2700	1350	4,20	6,40	14.2	G3/8	12	**P1V-S060A0270**
0,60	1700	850	6,70	10,10	14.2	G3/8	12	**P1V-S060A0170**
0,60	630	315	18,00	27,00	14.2	G3/8	12	**P1V-S060A0063**
0,60	480	240	23,90	36,00	14.2	G3/8	12	**P1V-S060A0048**
0,60	300	150	38,20	57,00	14.2	G3/8	12	**P1V-S060A0030**
0,30	150	75	38,00	57,00	14.2	G3/8	12	**P1V-S060A0015**

Keyed shaft, P1V-S090A series, 900 watt - (G3/8)

CE Ex II2GD cIIC T6 (80°C) X

0,90	12000	6000	1,40	2,10	23.3	G1/2	12	**P1V-S090A0C00**
0,90	3500	1750	4,90	7,30	23.3	G1/2	12	**P1V-S090A0350**
0,90	2700	1350	6,30	9,50	23.3	G1/2	12	**P1V-S090A0270**
0,90	1700	850	10,10	15,20	23.3	G1/2	12	**P1V-S090A0170**
0,90	630	315	27,00	40,00	23.3	G1/2	12	**P1V-S090A0063**
0,90	480	240	35,00	53,00	23.3	G1/2	12	**P1V-S090A0048**
0,90	300	150	57,00	85,00	23.3	G1/2	12	**P1V-S090A0030**

Keyed shaft, P1V-S120A series, 1200 watt - (G3/4)

CE Ex II2GD cIIC T5 (95°C) X

1,20	9000	4500	2,50	3,80	26,7	G3/4	19	**P1V-S120A0900**
1,20	2500	1250	8,20	13,70	26,7	G3/4	19	**P1V-S120A0250**
1,20	1100	550	21,00	31,00	26,7	G3/4	19	**P1V-S120A0110**
1,20	700	350	33,00	49,00	26,7	G3/4	19	**P1V-S120A0070**
1,20	320	160	71,00	107,00	26,7	G3/4	19	**P1V-S120A0032**
1,20	200	100	66,90	100,00	19,0	G3/4	19	**P1V-S120A0020**

* Max permitted torque to not damage the gearbox

Tel: +45 63 12 83 00 | Email: ps@hymatik.com | www.hymatik.com | Hvidkaervej 27a, DK-5250 Odense SV, Denmark

ATEX Robust air motors - P1V-S

The high torque motors of the P1V-S type are small in size but provide extremely high output. Our high torque motors are also less apt to stall. These drive solutions are Particularly suitable for use in industrial agitators and mixers as used in the paint industry, food industry or pharmaceutical industry.



- Power 0.28, 0.57 and 0.86 kW
- Designed for arduous applications
- No-lube intermittent operation as standard

II 2 GD c IIC T6 (80°C) X

Operating information

Working pressure	Max 6 bar in Ex area
Working temperature	-20° to +40°C in Ex area
Fluid	Compressed air with ISO 8573-1 Quality class 3.4.3 (no-lube operation) and 3.-.5 (lube operation)

Note : All technical data are based on a working pressure of 6 bar and with oil.
For oil-free performances are -10 to 15% lower.
Data tolerance accuracy -+10%

For details, see technical catalogue on web site : www.parker.com/euro_pneumatic

Keyed shaft, P1V-S028A series, 285 watt - (G3/8)

Max power	Free speed*	Nominal speed	Nominal torque	Min start torque	Air consumption at max power	Conn.	Min pipe ID	Weight	Order code
kW	rpm	rpm	Nm	Nm	l/s		mm	Kg	
0,285	170	85	32	47	7,8	G3/8	10	2,700	**P1V-S028A0017**
0,285	80	40	62	92	7,8	G3/8	10	2,600	**P1V-S028A0008**
0,285	50	25	110	162	7,8	G3/8	10	2,900	**P1V-S028A0005**
0,280	26	13	210	320	7,8	G3/8	10	3,500	**P1V-S028A0003**
0,280	14	7	410	615	7,8	G3/8	10	3,500	**P1V-S028A0002**

Keyed shaft, P1V-S057A series, 570 watt - (G1/2)

Max power	Free speed*	Nominal speed	Nominal torque	Min start torque	Air consumption at max power	Conn.	Min pipe ID	Weight	Order code
kW	rpm	rpm	Nm	Nm	l/s		mm	Kg	
0,570	150	75	72	108	14,2	G1/2	10	3,600	**P1V-S057A0015**
0,570	110	55	98	147	14,2	G1/2	10	3,600	**P1V-S057A0011**
0,570	74	37	150	225	14,2	G1/2	10	3,600	**P1V-S057A0007**
0,565	40	20	265	400	14,2	G1/2	10	4,400	**P1V-S057A0004**

Keyed shaft, P1V-S086A series, 860 watt - (G1/2)

Max power	Free speed*	Nominal speed	Nominal torque	Min start torque	Air consumption at max power	Conn.	Min pipe ID	Weight	Order code
kW	rpm	rpm	Nm	Nm	l/s		mm	Kg	
0,860	150	75	160	110	23,3	G1/2	10	3,800	**P1V-S086A0015**
0,860	110	55	220	150	23,3	G1/2	10	3,900	**P1V-S086A0011**
0,860	70	35	335	225	23,3	G1/2	10	3,900	**P1V-S086A0007**
0,850	40	20	600	400	23,3	G1/2	10	4,700	**P1V-S086A0004**

* maximum admissible speed (idling)

Tel: +45 63 12 83 00 | Email: ps@hymatik.com | www.hymatik.com | Hvidkaervej 27a, DK-5250 Odense SV, Denmark

Brake motors

The integrated brake is a spring-loaded disk brake, which is released at a minimum air pressure of 5 bar. The brake is applied in the absence of pressure.

The technology and the size of air motors with integrated running and stationary brake make them ideal for applications requiring repeated precise positioning.

The motor can also be kept stationary in a specific position, and the stopping time for a rotating weight can be shortened significantly. Another typical application for brake motors is when the output shaft needs to be held in one position when the motor stops delivering torque.

The brake can handle more than 1500 braking operations per hour at maximum braking torque.

Note!
Brake motors must only ever be supplied with unlubricated air, otherwise there is a risk of oil from the supply air getting into the brake unit, resulting in poor brake performance or no braking effect.

Please check the allowed maximum torque applied on the motor from the load in the technical catalogue

Data for reversible brake motor with keyed shaft, P1V-S020AD series, 200 watt

Max power	Free speed*	Nominal speed	Nominal torque	Min start torque	Air consumption at max power	Conn.	Min pipe ID	Weight	Order code
kW	rpm	rpm	Nm	Nm	l/s		mm	Kg	
0,200	14500	7250	0,26	0,40	6,2	G1/8	10	1,000	**P1V-S020ADE50**
0,200	4600	2300	0,80	1,20	6,2	G1/8	10	1,050	**P1V-S020AD460**
0,200	2400	1200	1,60	2,40	6,2	G1/8	10	1,050	**P1V-S020AD240**
0,200	1400	700	2,70	4,10	6,2	G1/8	10	1,150	**P1V-S020AD140**
0,200	700	350	5,40	8,20	6,2	G1/8	10	1,150	**P1V-S020AD070**
0,200	320	160	12,00	18,00	6,2	G1/8	10	1,150	**P1V-S020AD032**
0,100	180	90	10,50	15,00	4,5	G1/8	10	1,150	**P1V-S020AD018**
0,180	50	25	20,00**	20,00**	6,2	G1/8	10	1,250	**P1V-S020AD005**
0,180	20	–	20,00**	20,00**	6,2	G1/8	10	1,250	**P1V-S020AD002**
0,180	10	–	20,00**	20,00**	6,2	G1/8	10	1,350	**P1V-S020AD001**
0,180	5	–	20,00**	20,00**	6,2	G1/8	10	1,350	**P1V-S020AD0005**
Data for reversible brake motor with keyed shaft, P1V-S030AD series, 300 watt									
0,300	14500	7250	0,40	0,60	8,0	G1/4	10	1,350	**P1V-S030ADE50**
0,300	4600	2300	1,20	1,90	8,0	G1/4	10	1,400	**P1V-S030AD460**
0,300	2400	1200	2,40	3,60	8,0	G1/4	10	1,400	**P1V-S030AD240**
0,300	1400	700	4,10	6,10	8,0	G1/4	10	1,450	**P1V-S030AD140**
0,300	600	300	9,60	14,30	8,0	G1/4	10	1,500	**P1V-S030AD060**
0,300	340	170	16,90	25,30	8,0	G1/4	10	1,500	**P1V-S030AD034**
0,300	230	115	24,00	36**	8,0	G1/4	10	3,650	**P1V-S030AD023**
0,130	180	90	13,80	21,00	4,7	G1/4	10	1,150	**P1V-S030AD018**
0,300	100	50	57,00	85,50	8,0	G1/4	10	3,650	**P1V-S030AD010**
0,280	50	25	36**	36**	8,0	G1/4	10	1,600	**P1V-S030AD005**
Data for reversible brake motor with keyed shaft, P1V-S120AD series, 1200 watts									
1,200	9000	4500	2,50	3,80	26,7	G3/4	19	9,000	**P1V-S120AD900**
1,200	2500	1250	9,20	13,70	26,7	G3/4	19	9,200	**P1V-S120AD250**
1,200	1100	550	21,00	31,00	26,7	G3/4	19	9,200	**P1V-S120AD110**
1,200	700	350	33,00	49,00	26,7	G3/4	19	9,700	**P1V-S120AD070**
1,200	320	160	71,00	107,00	26,7	G3/4	19	9,700	**P1V-S120AD032**

* Max allowed torque

P1V-S Accessories

Flange



For air motor	For drilling motor	Order code
P1V-S002		**P1V-S4002B**
P1V-S003		**P1V-S4002B**
P1V-S008	P1V-S008	**P1V-S4008B**
P1V-S012		**P1V-S4012B**
P1V-S020	P1V-S025	**P1V-S4020B**
P1V-S028 high torque		**P1V-S4028B1**
P1V-S028 high torque		**P1V-S4028B2**
P1V-S030	P1V-S040	**P1V-S4030B**
P1V-S057 high torque		**P1V-S4028B1**
P1V-S057 high torque		**P1V-S4028B2**
P1V-S060	P1V-S060	**P1V-S4060B**
P1V-S086 high torque		**P1V-S4028B1**
P1V-S086 high torque		**P1V-S4028B2**
P1V-S090		**P1V-S4060B**
P1V-S120		**P1V-S4120B**

Foot



For air motor	For drilling motor	Order code
P1V-S008	P1V-S008	**P1V-S4008F**
P1V-S012		**P1V-S4012F**
P1V-S020	P1V-S025	**P1V-S4020F**
P1V-S028 high torque		**P1V-S4028F1**
P1V-S028 high torque		**P1V-S4028F2**
P1V-S030A0023		**P1V-S4020C**
P1V-S030A0010		**P1V-S4020C**
P1V-S030	P1V-S040	**P1V-S4030F**
P1V-S057 high torque		**P1V-S4028F1**
P1V-S057 high torque		**P1V-S4028F2**
P1V-S060	P1V-S060	**P1V-S4060F**
P1V-S086 high torque		**P1V-S4028F1**
P1V-S086 high torque		**P1V-S4028F2**
P1V-S090		**P1V-S4060F**
P1V-S120		**P1V-S4120F**

Tel: +45 63 12 83 00 | Email: ps@hymatik.com | www.hymatik.com | Hvidkaervej 27a, DK-5250 Odense SV, Denmark

Design Variants

Drilling, milling and grinding motors

A large number of drilling motors, milling motors and grinding motors have been developed using the P1V-S as the base motor in order to make it easier to install air motors in machining applications. These motors are all equipped with standard vanes for intermittent lubrication-free operation, although it is recommended to use oil mist if you are planning to operate them for extended periods.

Note! These motors are not made of 100% stainless steel.

Drilling motors are available with power ratings of 80, 170, 250 and 400 Watts, and several different speeds for the machining of a range of materials. They can be fitted with collet chucks, drill chucks and quick-release chucks. Many of them also have accessories allowing the exhaust air to be removed.

The milling motor, with a power rating of 400 Watts, runs at a relatively high speed, and is fitted with a collet chuck for a shaft diameter of 8 mm. It is equipped with strong bearings able to handle greater shear forces on the spindle.

The grinding motor, with a power rating of 200 Watts, is fitted with a collet chuck for a shaft diameter of 8 mm and runs at a relatively high speed. It is equipped with strong bearings able to handle greater shear forces on the spindle.

The design principle of the 90 Watt grinding motor is different from the others. The turbine principle means that high speeds are possible without the need for lubrication.



Feed movement in drilling, milling and grinding motors

A slow and even feed movement is necessary in machining applications. During drilling, the feed must not uncontrollably speed up once the drill breaks through the material. One good way of solving the problem is to use a pneumatic cylinder for the feed, which is able to provide force during drilling and a rapid approach before the actual drilling phase. Feed during the drilling phase is controlled using a hydraulic brake cylinder (HYDROCHECK) fitted in parallel with the pneumatic cylinder. This provides even, slow and safe feed movement, without the risk of the uncontrolled feed described above.

Note: All air motors can be operated oil-free without special adaptation with only a 20% reduction of power.

Operating information

Working pressure:	Max 7 bar
Working temperature:	-20°C to +110°C
Medium: (unlubricated for grinding motor P1V-S009)	40 µm filtered oil mist

For more information see www.parker.com/euro_pneumatic

Tel: +45 63 12 83 00 | Email: ps@hymatik.com | www.hymatik.com | Hvidkaervej 27a, DK-5250 Odense SV, Denmark

P1V-M is a series of air motors, with or without planetary gearbox. they are made of casted iron and grey painted. Its robustness makes it suitable for all industrial air motor applications.
P1V-M Air Motors are ATEX certified to be used in critical environments. The range contains five different sizes with power ratings of 200, 400, 600, 900 and 1200 Watts.
The motor and the gearbox are built to be extremely compact, making the motors suitable for applications requiring spaceless. The gearbox is of the planetary type, permanently lubricated with grease. The flange mounting is cast as an integral part of the case, and give, together with the foot bracket, plenty of opportunity for simple and robust installation.



- Power 0,2 kW, 0,4 kW, 0,6 kW, 0,9 kW & 1.2 kW
- ATEX certified
- Patented method for simple change of vanes
- Free speeds from 32 up to 10000 rpm
- Torque from 0,38 Nm up to 120 Nm by max output power
- Standard equipped with flange mounting
- Foot mountings as accesories

Operating information

Working pressure	Max 7 bar
Working temperature	-20 °C to +110 °C
Medium	Filtered dry air and oil mist, purity class ISO 8573-1 class 3.-.5 for indoor use and with a dew point lower than ambient temperature for outdoor use.

Robust motor reversible with keyed shaft, flange

Max power	Free speed*	Nominal speed	Nominal torque	Min start torque	Air consumption at max power	Conn.	Min pipe ID	Weight	Order code
kW	rpm	rpm	Nm	Nm	l/s		mm	Kg	
0,200	10 000	5 000	0,38	0,57	5	G1/8	10	1,00	**P1V-M020B0A00**
0,400	10 000	5 000	0,76	1,10	10	G3/8	12	1,40	**P1V-M040B0A00**
0,600	10 000	5 000	1,10	1,70	15	G3/8	13	1,60	**P1V-M060B0A00**
0,900	10 500	5 250	1,60	2,40	36,7	G1/2	13	3,10	**P1V-M090B0A00**
1,200	10 500	5 250	2,20	3,30	43,3	G1/2	13	3,80	**P1V-M120B0A00**

* maximum admissible speed (idling)

Robust reversible motor with keyed shaft, flange

Max power	Free speed*	Nominal speed	Nominal torque	Min start torque	Air consumption at max power	Conn.	Min pipe ID	Weight	Order code
kW	rpm	rpm	Nm	Nm	l/s		mm	Kg	
0,200	2 300	1 150	1,60	2,40	5	G1/8	10	2,40	**P1V-M020C0230**
0,200	1 460	730	2,60	3,90	5	G1/8	10	2,40	**P1V-M020C0146**
0,200	540	270	7,00	10,50	5	G1/8	10	2,80	**P1V-M020C0054**
0,200	340	170	11,20	16,80	5	G1/8	10	2,80	**P1V-M020C0034**
0,200	210	105	18,20	27,30	5	G1/8	10	2,80	**P1V-M020C0021**
0,200	120	60	31,80	47,70	5	G1/8	10	3,20	**P1V-M020C0012**
0,200	80	40	47,80	71,70	5	G1/8	10	3,20	**P1V-M020C0008**
0,200	32	16	80**	80**	5	G1/8	10	3,20	**P1V-M020C0003**

* maximum admissible speed (idling) / ** gear box restriction

Tel: +45 63 12 83 00 | Email: ps@hymatik.com | www.hymatik.com | Hvidkaervej 27a, DK-5250 Odense SV, Denmark

Robust reversible motor with keyed shaft, flange

Max power kW	Free speed* rpm	Nominal speed rpm	Nominal torque Nm	Min start torque Nm	Air consumption at max power l/s	Conn.	Min pipe ID mm	Weight Kg	Order code
0,400	2 300	1 150	3,20	4,80	10	G3/8	12	2,80	**P1V-M040C0230**
0,400	1 460	730	5,20	7,80	10	G3/8	12	2,80	**P1V-M040C0146**
0,400	540	270	14,00	21,00	10	G3/8	12	3,20	**P1V-M040C0054**
0,400	340	170	22,40	33,60	10	G3/8	12	3,20	**P1V-M040C0034**
0,400	210	105	36,40	54,60	10	G3/8	12	3,20	**P1V-M040C0021**
0,400	120	60	63,60	80**	10	G3/8	12	3,60	**P1V-M040C0012**
0,400	80	40	80**	80**	10	G3/8	12	3,60	**P1V-M040C0008**

* maximum admissible speed (idling) / ** gear box restriction

Robust reversible motor with keyed shaft, flange

Max power kW	Free speed* rpm	Nominal speed rpm	Nominal torque Nm	Min start torque Nm	Air consumption at max power l/s	Conn.	Min pipe ID mm	Weight Kg	Order code
0,600	2 300	1 150	5,00	7,50	15	G3/8	13	3,00	**P1V-M060C0230**
0,600	1 460	730	7,80	11,70	15	G3/8	13	3,00	**P1V-M060C0146**
0,600	540	270	21,00	31,50	15	G3/8	13	3,40	**P1V-M060C0054**
0,600	340	170	33,60	50,40	15	G3/8	13	3,40	**P1V-M060C0034**
0,600	210	105	54,50	80**	15	G3/8	13	3,40	**P1V-M060C0021**
0,600	120	60	80**	80**	15	G3/8	13	3,80	**P1V-M060C0012**

* maximum admissible speed (idling) / ** gear box restriction

Robust motor reversible with keyed shaft, flange

Max power kW	Free speed* rpm	Nominal speed rpm	Nominal torque Nm	Min start torque Nm	Air consumption at max power l/s	Conn.	Min pipe ID mm	Weight Kg	Order code
0,900	2 450	1 225	7,00	10,50	36,7	G1/2	13	4,90	**P1V-M090C0245**
0,900	1 560	780	11,00	16,50	36,7	G1/2	13	4,90	**P1V-M090C0156**
0,900	580	290	30,00	45,00	36,7	G1/2	13	5,60	**P1V-M090C0058**
0,900	360	180	47,00	71,00	36,7	G1/2	13	5,60	**P1V-M090C0036**
0,900	230	115	75,00	112,00	36,7	G1/2	13	5,60	**P1V-M090C0023**
0,900	134	67	120**	120**	36,7	G1/2	13	6,30	**P1V-M090C0013**
0,900	90	45	120**	120**	36,7	G1/2	13	6,30	**P1V-M090C0009**
0,900	40	20	120**	120**	36,7	G1/2	13	6,30	**P1V-M090C0004**

* maximum admissible speed (idling) / ** gear box restriction

Robust motor reversible with keyed shaft, flange

Max power kW	Free speed* rpm	Nominal speed rpm	Nominal torque Nm	Min start torque Nm	Air consumption at max power l/s	Conn.	Min pipe ID mm	Weight Kg	Order code
1,20	2 450	1 225	9,40	14,00	43,3	G1/2	13	5,60	**P1V-M120C0245**
1,20	1 560	780	14,70	22,00	43,3	G1/2	13	5,60	**P1V-M120C0156**
1,20	580	290	40,00	60,00	43,3	G1/2	13	6,30	**P1V-M120C0058**
1,20	360	180	63,00	94,00	43,3	G1/2	13	6,30	**P1V-M120C0036**
1,20	230	115	100,00	120**	43,3	G1/2	13	6,30	**P1V-M120C0023**

* maximum admissible speed (idling) / ** gear box restriction

Tel: +45 63 12 83 00 | Email: ps@hymatik.com | www.hymatik.com | Hvidkaervej 27a, DK-5250 Odense SV, Denmark

Dimensions (mm)

Motor P1V-M020B0A00
P1V-M040B0A00
P1V-M060B0A00

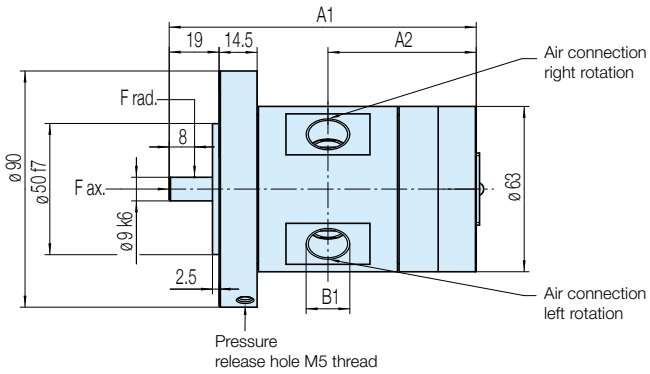

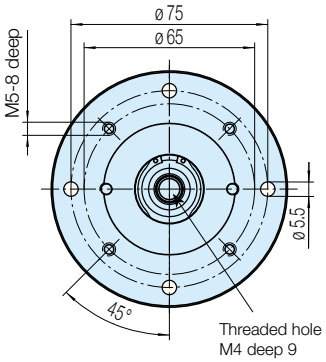

Motor P1V-M090B0A00
P1V-M120B0A00

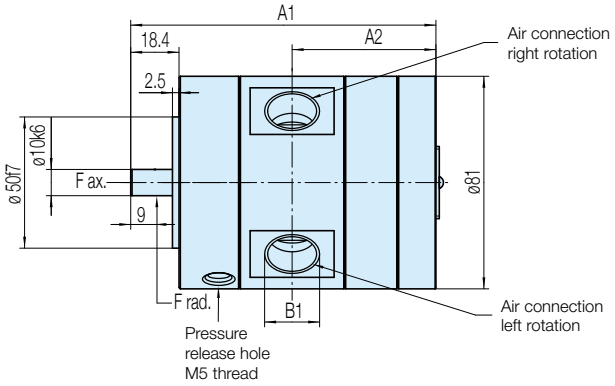

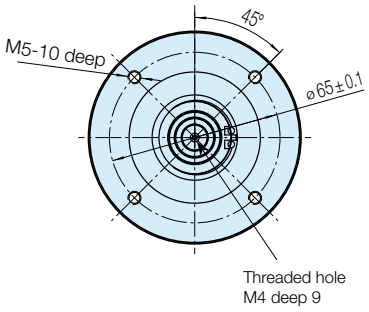

Motor type	Dimensions (mm)				
	A1	A2	B1	Key on shaft	
P1V-M020B0A00	82	39	G1/8	DIN6885	A3x3x10
P1V-M040B0A00	102	49	G3/8	DIN6885	A3x3x10
P1V-M060B0A00	117	56.5	G3/8	DIN6885	A3x3x10
P1V-M090B0A00	116.3	54.8	G1/2	DIN6885	A3x3x18
P1V-M120B0A00	136.3	64.3	G1/2	DIN6885	A3x3x18

Parker Hannifin Corporation
Pneumatic Division - Europe

Tel: +45 63 12 83 00 | Email: ps@hymatik.com | www.hymatik.com | Hvidkaervej 27a, DK-5250 Odense SV, Denmark

Dimensions (mm)

Motor P1V-M020C

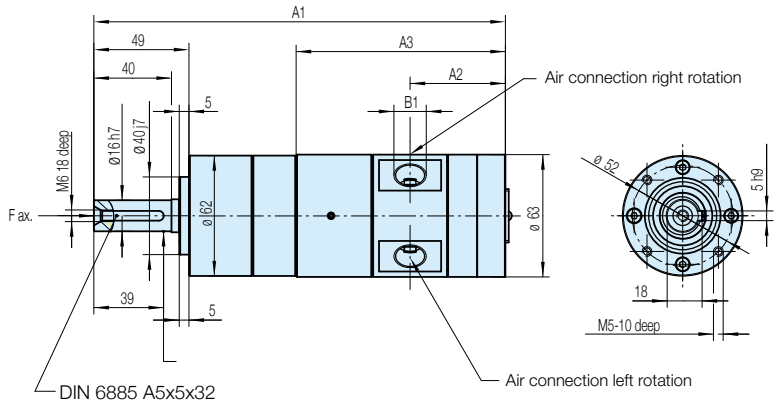

Motor P1V-M040C

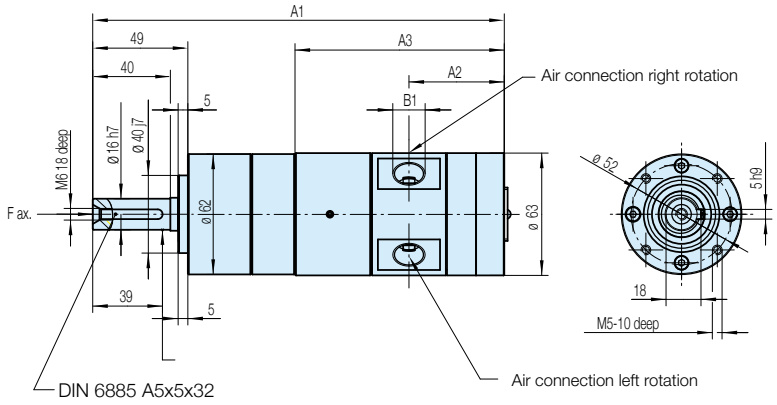

Motor P1V-M060C

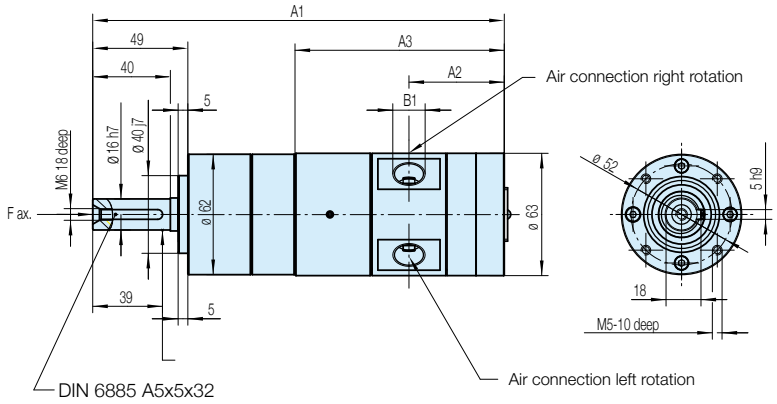

Motor size				Dimensions (mm)			
				A1	A2	A3	B1
200 watts	**P1V-M020C0230**	**P1V-M020C0034**		192.5	39	88	G1/8
	P1V-M020C0146	**P1V-M020C0021**	**P1V-M020C0008**	208.5	39	88	G1/8
	P1V-M020C0054	**P1V-M020C0012**	**P1V-M020C0003**	224	39	88	G1/8
400 watts	**P1V-M040C0230**	**P1V-M040C0034**		212.5	49	108	G3/8
	P1V-M040C0146	**P1V-M040C0021**	**P1V-M040C0008**	228.5	49	108	G3/8
	P1V-M040C0054	**P1V-M040C0012**		244	49	108	G3/8
600 watts	**P1V-M060C0230**	**P1V-M060C0034**		227.5	56.5	123	G3/8
	P1V-M060C0146	**P1V-M060C0021**	**P1V-M060C0012**	243.5	56.5	123	G3/8
	P1V-M060C0054			259	56.5	123	G3/8

Tel: +45 63 12 83 00 | Email: ps@hymatik.com | www.hymatik.com | Hvidkaervej 27a, DK-5250 Odense SV, Denmark

Dimensions (mm)

Motor P1V-M090C

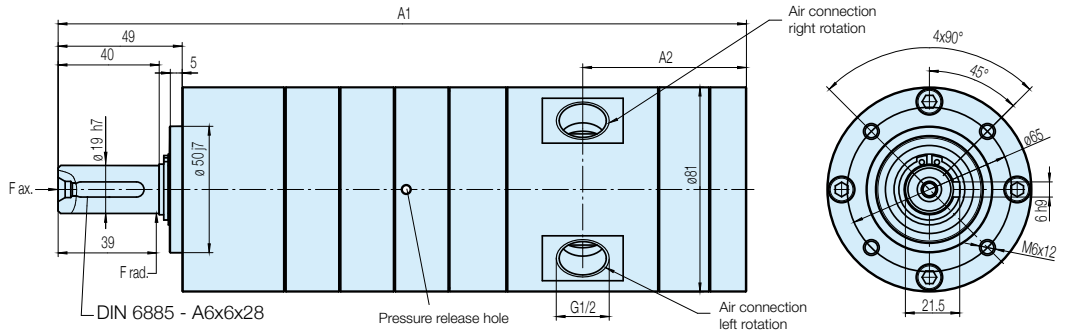

Motor P1V-M120C

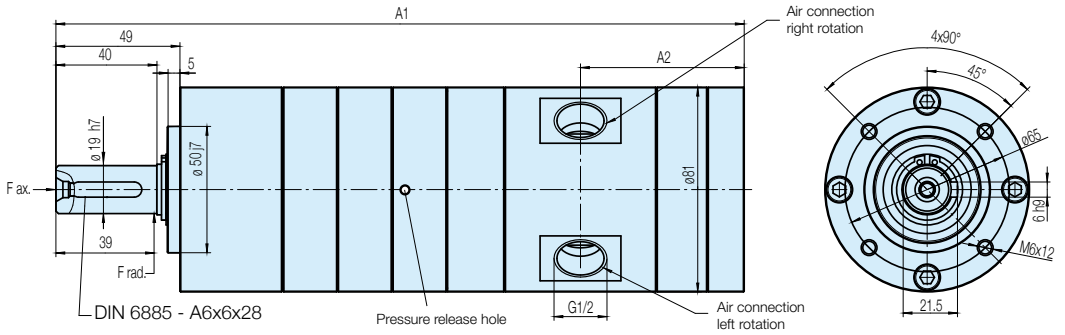

Motor size				Dimensions (mm)	
				A1	A2
900 watts	**P1V-M090C0245**	**P1V-M090C0156**		209	55
	P1V-M090C0058	**P1V-M090C0036**	**P1V-M090C0023**	231	55
	P1V-M090C0013	**P1V-M090C0009**	**P1V-M090C0004**	252.5	55
1200 watts	**P1V-M120C0245**	**P1V-M120C0156**		229	65
	P1V-M120C0058	**P1V-M120C0036**	**P1V-M120C0023**	251	65

Tel: +45 63 12 83 00 | Email: ps@hymatik.com | www.hymatik.com | Hvidkaervej 27a, DK-5250 Odense SV, Denmark

These large motors are designed for use in the most arduous applications, requiring considerable power, torque, robustness and reliability



Operating information

Working pressure:	Max 7 bar
Temperature range:	-20°C to +110°C
Medium	Filtered dry air and oil mist, purity class ISO 8573-1 class 3.-.5 for indoor use and with a dew point lower than ambient temperature for outdoor use

For more information see www.parker.com/euro_pneumatic

Reversible motor without gear box, IEC Flange

Max power	Free speed	Speed at max power	Torque at at max power	Min start torque	Air consumption at max power	Conn.	Min pipe ID	Weight	Order code
kW	rpm	rpm	Nm	Nm	m^3/min		mm	Kg	
5,1	6000	3000	16.2	24.4	6.2	G1	25	27	**P1V-B510A0600**
9	6000	3000	28.6	43	10	G1	25	25	**P1V-B900A0600**
18	6000	3000	57	85	20	G2	43	54	**P1V-BJ00A0600**

Technical data

Air motor size & type	P1V-B510	P1V-B900	P1V-BJ00
Nominal power (watts)	5100	9000	18000
Working pressure (bar)	3 to 7		
Working temperature (°C)	-20 to +110		
Ambient temperature (°C)	-20 to +110		
Air flow required (Nl/min)	6200	10000	20000
Min pipe ID, inlet (mm)	25	25	43
Min pipe ID, outlet (mm)	25	25	43
Choice of treatment unit: recommended min air flow (l/min) at p1 7.5 bar and 0.8 bar pressure drop			
	6400	10300	20400
Choice of valve: recommended min nominal air flow (l/min) at p1 6 bar and 1 bar pressure drop			
	6600	10600	20800
Medium	40µm filtered, oil mist or dry unlubricated compressed air		
Oil operation	1-2 drop per cube meter, ISO8573-1 purity class 3.-.5		
Recommended oil	Foodstuffs industry Klüber oil 4 UH 1-32 N		
Shaft radial force (N)	7500	7500	7500
Shaft axial force (N)	11000	11000	11000

Material specification

Air motor size & type	P1V-B510	P1V-B900	P1V-BJ00
Motor housing	Cast iron, synthetic paint, black color		
Shaft	High grade steel		
Key	Hardened steel		
External seal	Nitrile rubber, NBR		
Internal steel parts	High grade steel		
Vanes	Patented, no data		

Tel: +45 63 12 83 00 | Email: ps@hymatik.com | www.hymatik.com | Hvidkaervej 27a, DK-5250 Odense SV, Denmark

Dimensions (mm)

Flange motor IEC112A (P1V-B510)

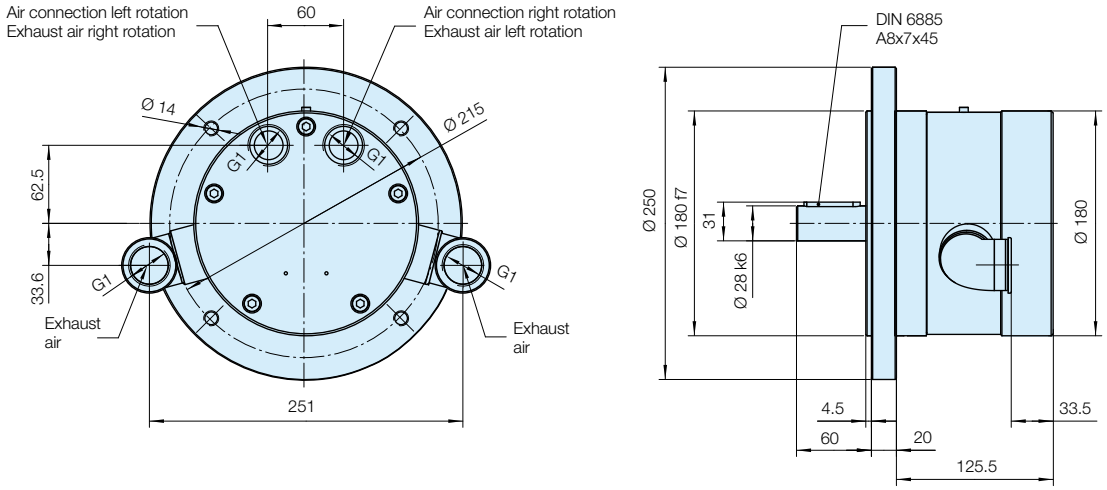

Flange motor IEC112A (P1V-B900)

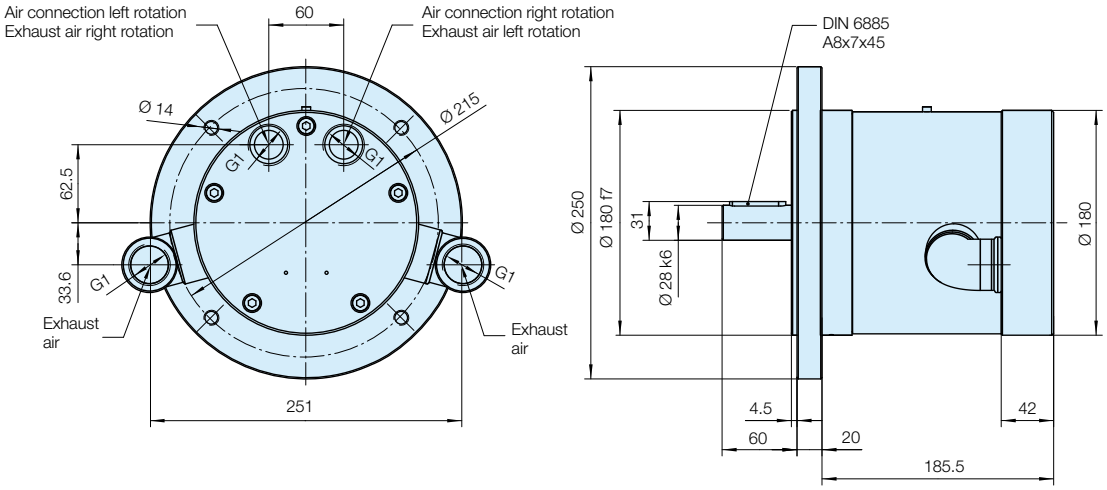

Flange motor IEC112A (P1V-BJ00)

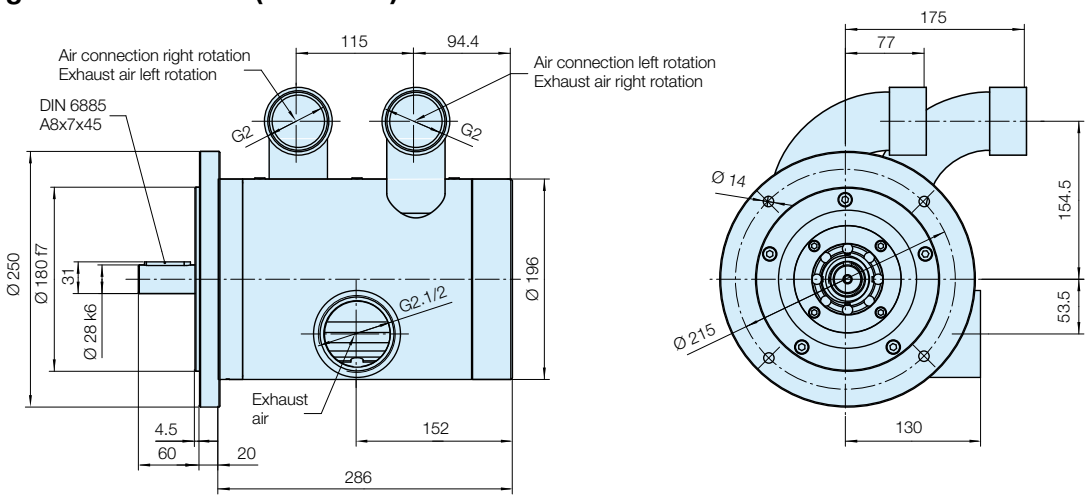

Tel: +45 63 12 83 00 | Email: ps@hymatik.com | www.hymatik.com | Hvidkaervej 27a, DK-5250 Odense SV, Denmark

Technical data

Note: All technical data are based on a working pressure of 6 bar and with oil. Speed tolerance accuracy in between clock and anti-clockwise directions is ±10%.

Air motor size & type	P1V-A160	P1V-A260	P1V-A360
Nominal power (watts)	1600	2600	3600
Working pressure (bar)	3 to 7, 6 in explosive atmosphere		
Working temperature (°C)	-20 to +110		
Ambient temperature (°C)	-20 to +110		
Air flow required (Nl/min)	1900	3600	5800
Min pipe ID, inlet (mm)	15	19	25
Min pipe ID, outlet (mm)	15	19	25
Choice of treatment unit: recommended min air flow (l/min) at p1 7.5 bar and 0.8 bar pressure drop			
	2100	3900	6200
Choice of valve: recommended min nominal air flow (l/min) at p1 6 bar and 1 bar pressure drop			
	2300	4200	6600
Medium	40µm filtered, oil mist lubricated compressed air		
Oil operation	1-2 drop per cube meter, ISO8573-1 purity class 3.-.5		
Recommended oil	Foodstuffs industry Klüber oil 4 UH1- 32 N		
Sound level free outlet (dB(A))	120	131	131
With outlet silencer (dB(A))	97.5	99	101

Note: sound levels are measured at free speed with the measuring instrument positioned 1 meter away from the air motor at an height of 1 meter.

Material specification

Air motor size & type	P1V-A160	P1V-A260	P1V-A360
	Without gear box		
Motor housing	Cast iron, synthetic paint, silver grey color		
Shaft	High grade steel		
Key	Hardened steel		
External seal	Nitrile rubber, NBR		
Internal steel parts	High grade steel		
Vanes	Patented, no data		
Screws	Zinc coated steel		
	With gear boxes, common data		
Housing	Alloy steel, synthetic paint, silver grey color		
Shaft	Hardened steel		
Key	Hardened steel		
Shaft seal	Nitrile rubber, NBR		
Screws	Zinc coated steel		
	With planetary gear box		
Housing	Cast iron, synthetic paint, silver grey color		
	With helical gear box		
Housing	Aluminium or cast iron, synthetic paint, silver grey color		
	With worm gear box		
Housing	Aluminium or cast iron, synthetic paint, silver grey color		
Pinion	Chili cast phosphor bronze		
Worm	Alloyed, hardened steel		

Tel: +45 63 12 83 00 | Email: ps@hymatik.com | www.hymatik.com | Hvidkaervej 27a, DK-5250 Odense SV, Denmark

P1V-A Air Motor - Without gear box

NOTE! All technical data are based on a working pressure of 6 bar and with oil. Speed tolerance accuracy is -+10%.



A: Basic reversible motor without gear box, IEC Flange

Max power	Free speed*	Nominal speed	Nominal torque	Min start torque	Air consumption at max power	Connection	Min pipe ID inlet/ outlet	Weight	Order code
kW	rpm	rpm	Nm	Nm	l/s		mm	Kg	
1,600	9000	4500	3,3	5,0	32	G1/2	15	4,2	**P1V-A160A0900**
2,600	7000	3500	7,1	11,0	60	G3/4	19	7,9	**P1V-A260A0700**
3,600	6000	3000	11,5	17,0	97	G1	25	16,5	**P1V-A360A0600**

* maximum admissible speed (idling)

P1V-A160A0900

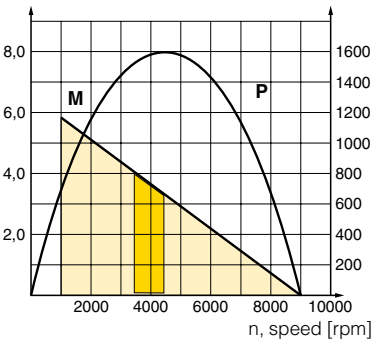

P1V-A260A0700

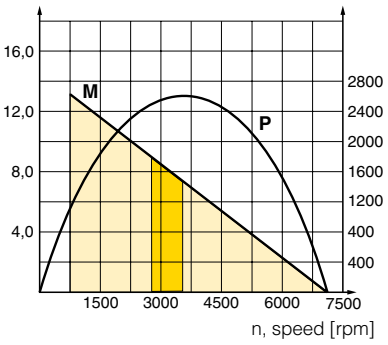

P1V-A360A0600

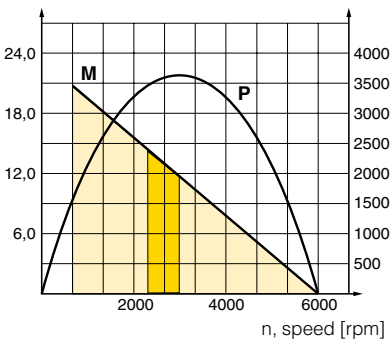

Possible working range of motor.

Optimum working range of motor.
Higher speeds = more vane wear
Lower speeds with high torque = more gearbox wear

Permitted shaft loadings

Max permitted load on output shaft for basic motors (based on 10,000,000 revolutions of the output shaft, with 90% probable service life for ball bearings.

	F_{ax} N	F_{rad} N	a mm
P1V-A160A0900	600	1000	15
P1V-A260A0700	700	1400	20
P1V-A360A0600	900	1900	25

F_{rad} = Radial loading (N)
F_{ax} = Axial loading (N)

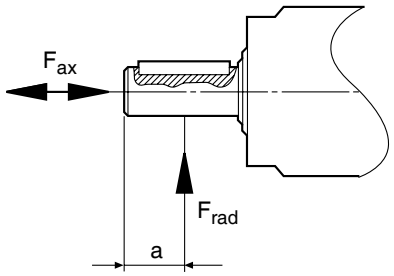

Fig. 1: Loading on output shaft.

Tel: +45 63 12 83 00 | Email: ps@hymatik.com | www.hymatik.com | Hvidkaervej 27a, DK-5250 Odense SV, Denmark

Dimensions (mm)

Flange motor IEC71AB5 (P1V-A160)

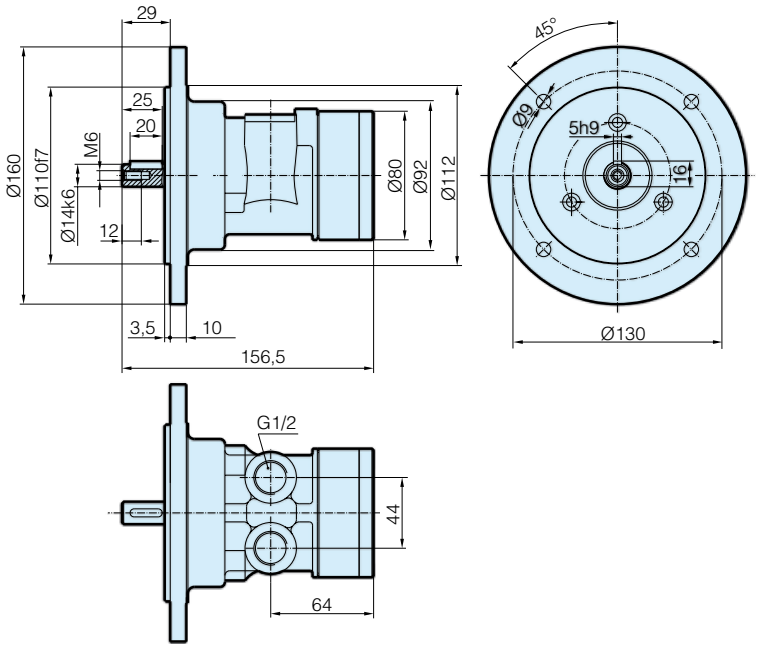

Flange motor IEC80AB5 (P1V-A260)

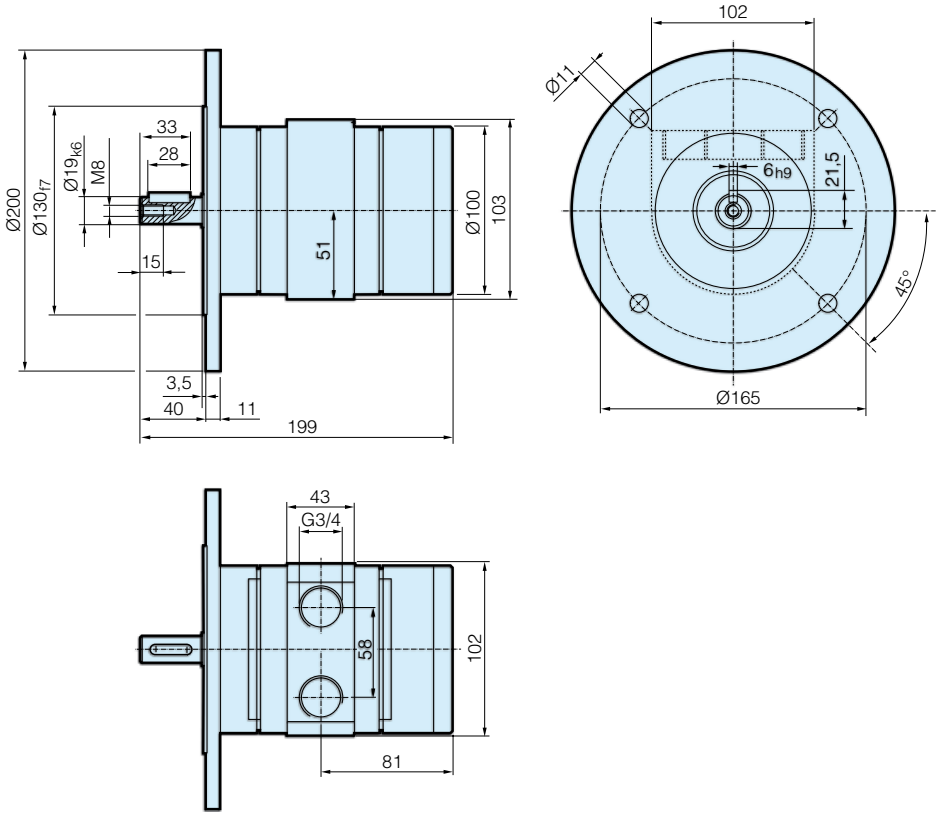

Dimensions (mm)

Flange motor IEC90AB5 (P1V-A360)

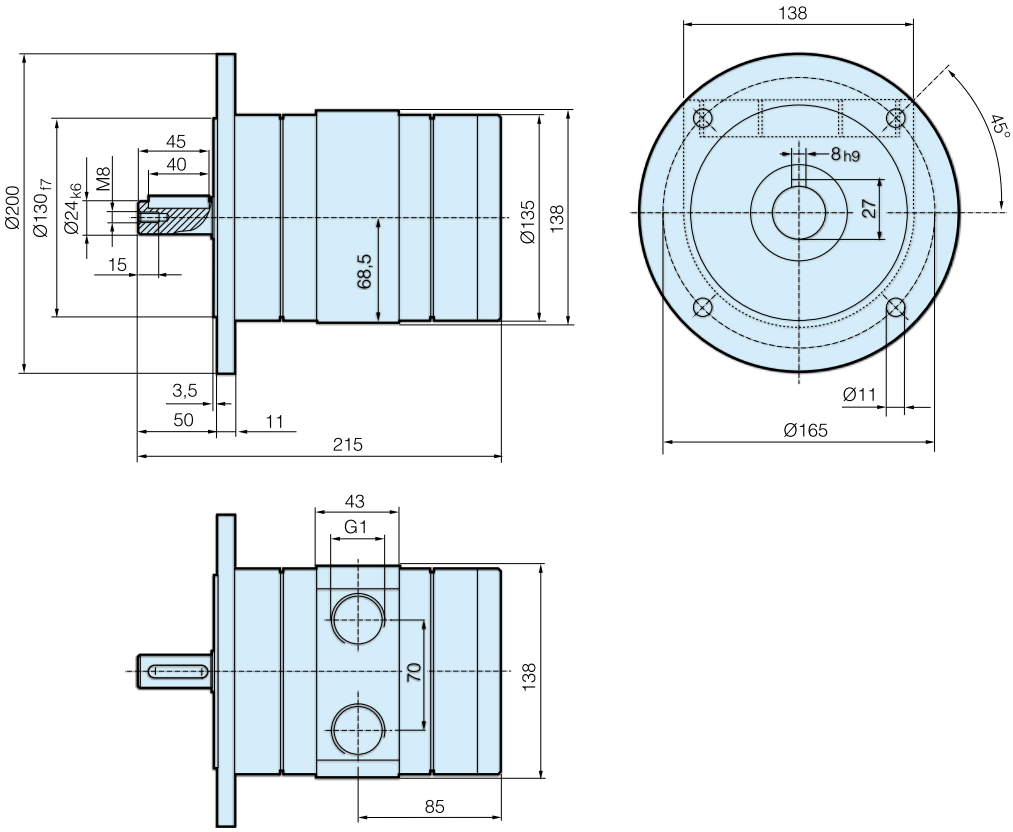

Tel: +45 63 12 83 00 | Email: ps@hymatik.com | www.hymatik.com | Hvidkaervej 27a, DK-5250 Odense SV, Denmark

P1V-A Air Motor - Planetary Gear

NOTE! All technical data are based on a working pressure of 6 bar and with oil. Speed tolerance accuracy is -+10%.

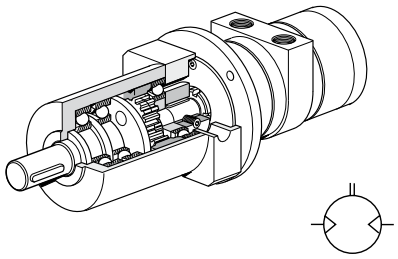

B: Reversible motor with planetary gear, flange mounting, free installation position

Max power kW	Max speed* rpm	Nominal speed rpm	Nominal Torque Nm	Min start torque Nm	Max permanent torque** Nm	Air consumption at max power l/s	Connection	Min pipe ID inlet/ outlet mm	Weight Kg	Order code
Series P1V-A160										
1,600	1200	900	16	24	40	32	G1/2	15	8,3	**P1V-A160B0120**
1,600	600	450	32	48	35	32	G1/2	15	8,3	**P1V-A160B0060**
1,600	190	180	77	115	100	32	G1/2	15	15,4	**P1V-A160B0019**
Series P1V-A260										
2,600	1200	700	34	51	40	60	G3/4	19	12,0	**P1V-A260B0120**
2,600	600	350	67	100	40	60	G3/4	19	12,0	**P1V-A260B0060**
2,600	190	140	160	240	40	60	G3/4	19	13,0	**P1V-A260B0019**
Series P1V-A360										
3,600	960	600	55	82	100	97	G1	25	25,5	**P1V-A360B0096**
3,600	480	300	110	165	100	97	G1	25	25,5	**P1V-A360B0048**

* maximum admissible speed (idling)

** Max gear box torque for a permanent load

Permitted shaft loadings

The following calculations should be used to determine the loading on the output shaft bearing, if a service life of 10,000,000 revolutions of the output shaft is to be obtained with 90% probability.

F_{ax} = max 0,24 × F_{rad}

$M = \pm F_{ax} \times r \pm F_{rad} \times (X + K)$

Where M and K are found in the table below

	M Nm	K N
P1V-A160B120	2651	0,031
P1V-A160B060	2651	0,031
P1V-A160B019	7385	0,040
P1V-A160B010	7385	0,040
P1V-A260B120	2651	0,031
P1V-A260B060	2651	0,031
P1V-A260B019	7385	0,040
P1V-A360B096	7385	0,040
P1V-A360B048	7385	0,040

M Max. torque loading on output shaft (Nm)
r Distance from centre of output shaft to axial load (m)
X Distance from collar to radial load (m)
F_{rad} Radial loading (N)
F_{ax} Axial loading (N)

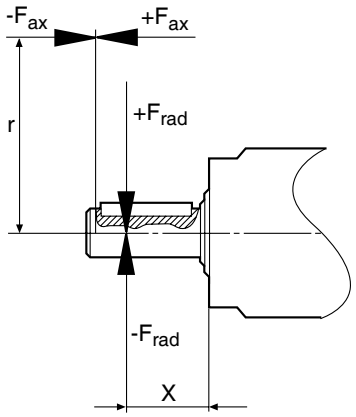

Fig 2: Load and braking torque on output shaft of planetary gear

Tel: +45 63 12 83 00 | Email: ps@hymatik.com | www.hymatik.com | Hvidkaervej 27a, DK-5250 Odense SV, Denmark

Dimensions (mm)

B: Motor with planetary gear, flange mounting

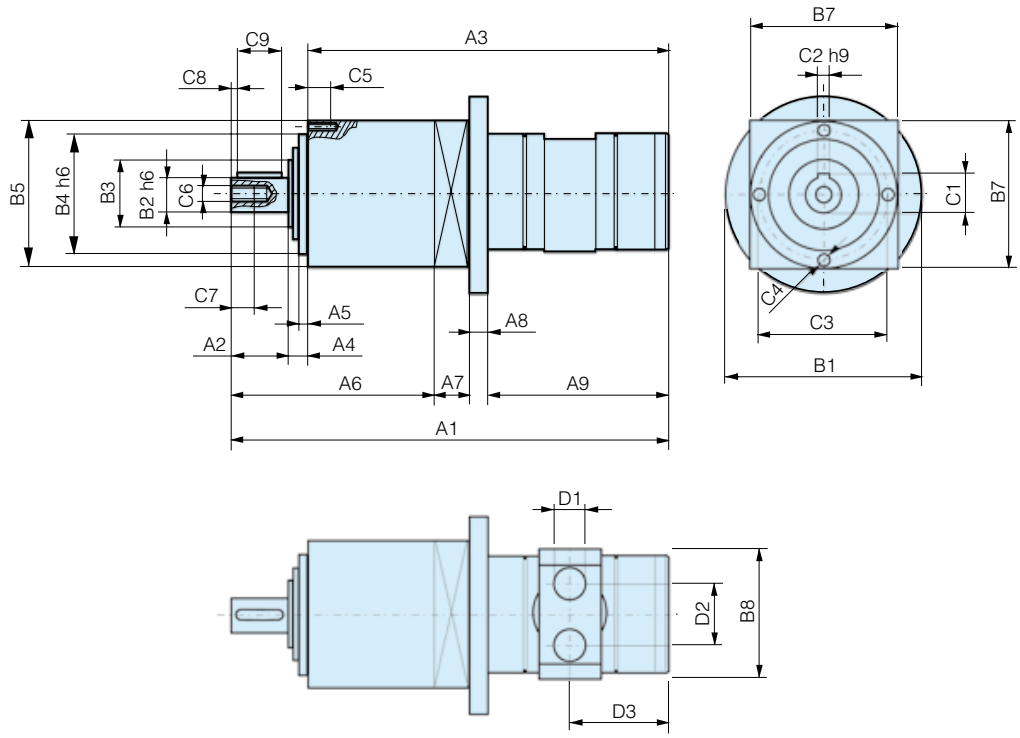

Order code	A1	A2	A3	A4	A5	A6	A7	A8	A9	B1	B2	B3	B4	B5	B6
P1V-A160B0120	274,5	36	228,5	10	5	126,0	22	10	116,5	160	22	40	68	90	80
P1V-A160B0060	274,5	36	228,5	10	5	126,0	22	10	116,5	160	22	40	68	90	80
P1V-A160B0019	359,0	58	289,0	12	5	204,5	28	10	116,5	160	32	50	90	120	80
P1V-A260B0120	317,0	36	271,0	10	6	126,0	32	11	148,0	200	22	40	68	90	100
P1V-A260B0060	317,0	36	271,0	10	6	126,0	32	11	148,0	200	22	40	68	90	100
P1V-A260B0019	391,5	58	321,5	12	6	204,5	28	11	148,0	200	32	50	90	120	100
P1V-A360B0096	375,0	58	305,0	12	6	172,0	38	11	154,0	200	32	50	90	120	135
P1V-A360B0048	375,0	58	305,0	12	6	172,0	38	11	154,0	200	32	50	90	120	135

Order code	B7	B8	C1	C2	C3	C4	C5	C6	C7	C8	C9	D1	D2	D3
P1V-A160B0120	120	85	24,5	6	80	M6	12	M8	13	2	32	G1/2	44	64
P1V-A160B0060	120	85	24,5	6	80	M6	12	M8	13	2	32	G1/2	44	64
P1V-A160B0019	120	85	35,0	10	108	M8	16	M12	22	4	50	G1/2	44	64
P1V-A260B0120	140	102	24,5	6	80	M6	12	M8	13	2	32	G3/4	58	81
P1V-A260B0060	140	102	24,5	6	80	M6	12	M8	13	2	32	G3/4	58	81
P1V-A260B0019	140	102	35,0	10	108	M8	16	M12	22	4	50	G3/4	58	81
P1V-A360B0096	140	138	35,0	10	108	M8	16	M12	22	4	50	G1	70	85
P1V-A360B0048	140	138	35,0	10	108	M8	16	M12	22	4	50	G1	70	85

Tel: +45 63 12 83 00 | Email: ps@hymatik.com | www.hymatik.com | Hvidkaervej 27a, DK-5250 Odense SV, Denmark

P1V-A Air Motor - Helical Gear

**NOTE! All technical data are based on a working pressure of 6 bar and with oil.
Speed tolerance accuracy is -+10%.**

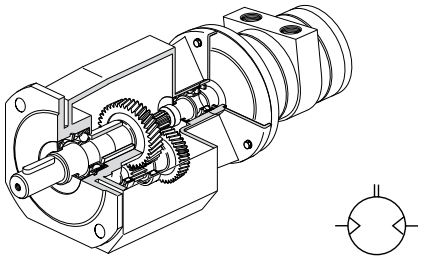

D: Reversible motor with helical gear, flange mounting

Max power kW	Max speed* rpm	Nominal speed rpm	Nominal torque Nm	Min start torque Nm	Max permanent torque** Nm	Air consumption at max power l/s	Connection	Min pipe ID inlet/ outlet mm	Weight Kg	Order code
Series P1V-A160										
1,600	660	590	24	36	45	32	G1/2	15	9,8	**P1V-A160D0066••**
1,600	320	280	50	75	140	32	G1/2	15	11,5	**P1V-A160D0032••**
1,600	140	120	113	171	280	32	G1/2	15	14,4	**P1V-A160D0014••**
1,600	80	70	197	299	560	32	G1/2	15	31,7	**P1V-A160D0008••**
1,600	37	33	413	626	1000	32	G1/2	15	49,2	**P1V-A160D0004••**
1,600	21	18	716	1084	1600	32	G1/2	15	67,2	**P1V-A160D0003••**
Series P1V-A260										
2,600	800	565	42	64	42	60	G3/4	19	14,9	**P1V-A260D0080••**
2,600	520	365	65	100	115	60	G3/4	19	16,1	**P1V-A260D0052••**
2,600	250	175	135	210	235	60	G3/4	19	19,0	**P1V-A260D0025••**
2,600	110	80	302	468	500	60	G3/4	19	36,4	**P1V-A260D0011••**
2,600	55	40	614	951	1000	60	G3/4	19	54,9	**P1V-A260D0006••**
2,600	30	20	990	1530	1600	60	G3/4	19	68,9	**P1V-A260D0003••**
Series P1V-A360										
3,600	1050	625	52	78	80	97	G1	25	24,6	**P1V-A360D0105••**
3,600	520	310	105	155	175	97	G1	25	24,6	**P1V-A360D0052••**
3,600	250	150	216	320	385	97	G1	25	45,0	**P1V-A360D0025••**
3,600	125	74	441	652	795	97	G1	25	63,5	**P1V-A360D0013••**
3,600	60	36	888	1312	1600	97	G1	25	77,5	**P1V-A360D0006••**
3,600	30	18	1800	2670	4000	97	G1	25	151,5	**P1V-A360D0003••**

* maximum admissible speed (idling)

** Max gear box torque for a permanent load

Note!
•• specify installation position in the order code as in the illustrations below.
Example: P1V-A160D0066B5

Note: Oil-bath gearboxes mean that the installation position must be decided in advance. The installation position determines the volume of oil in the gearbox and location of oil filling and drain plugs.

D: Installation positions, helical gear, flange mounting

B5

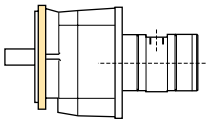

V1

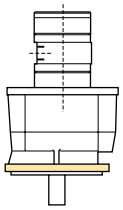

V3

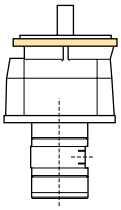

Tel: +45 63 12 83 00 | Email: ps@hymatik.com | www.hymatik.com | Hvidkaervej 27a, DK-5250 Odense SV, Denmark

Dimensions (mm)

D: Motor with helical gear, flange mounting

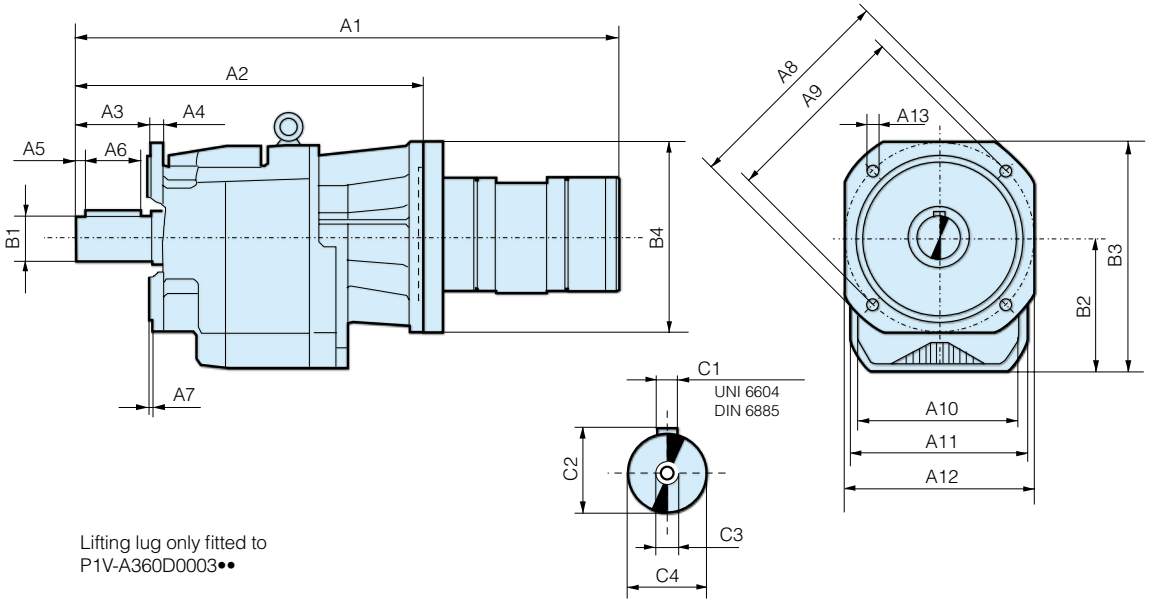

Lifting lug only fitted to
P1V-A360D0003••

Order code	A1	A2	A3	A4	A5	A6	A7	A8	A9	A10	A11	A12	A13	B1	B2	B3
P1V-A160D0066••	370,5	244	40	8	5	30	3,0	140	115	95f7	95	105	9,5	20	82	138,0
P1V-A160D0032••	399,5	273	50	10	5	40	3,5	160	130	110f7	110	135	9,5	25	92	159,5
P1V-A160D0014••	433,5	307	60	12	5	50	3,5	200	165	130f7	130	150	11,5	30	108	183,0
P1V-A160D0008••	463,5	337	70	13	5	60	4,0	250	215	180 f7	155	210	14,0	35	128	233,0
P1V-A160D0004••	559,5	433	80	16	5	70	5,0	300	265	230 f7	185	260	14,0	40	152	282,0
P1V-A160D0003••	601,5	475	100	16	5	90	5,0	300	265	230 f7	210	260	14,0	50	190	320,0
P1V-A260D0080••	423,0	264	40	8	5	30	3,0	140	115	95f7	95	105	9,5	20	82	138,0
P1V-A260D0052••	451,0	292	50	10	5	40	3,5	160	130	110f7	110	135	9,5	25	92	159,5
P1V-A260D0025••	486,0	327	60	12	5	50	3,5	200	165	130f7	130	150	11,5	30	108	183,0
P1V-A260D0011••	515,0	356	70	13	5	60	4,0	250	215	180 f7	155	210	14,0	35	128	233,0
P1V-A260D0006••	612,0	453	80	16	5	70	5,0	300	265	230 f7	185	260	14,0	40	152	282,0
P1V-A260D0003••	634,0	475	100	16	5	90	5,0	300	265	230 f7	210	260	14,0	50	190	320,0
P1V-A360D0105••	458,0	292	50	10	5	40	3,5	160	130	110f7	110	135	9,5	25	92	159,5
P1V-A360D0052••	458,0	292	50	10	5	40	3,5	160	130	110f7	110	135	9,5	25	92	159,5
P1V-A360D0025••	521,0	356	70	13	5	60	4,0	250	215	180 f7	155	210	14,0	35	128	233,0
P1V-A360D0013••	547,0	382	80	16	5	70	5,0	300	265	230 f7	185	260	14,0	40	152	282,0
P1V-A360D0006••	640,0	475	100	16	5	90	5,0	300	265	230 f7	210	260	14,0	50	190	320,0
P1V-A360D0003••	699,0	534	140	20	15	110	5,0	400	350	300 f7	320	350	18,0	80	247	424,0

Order code	B4	C1	C2	C3	C4
P1V-A160D0066••	160	6x6x30	22,5	M8x19	20 h6
P1V-A160D0032••	160	8x7x40	28,0	M8x19	25 h6
P1V-A160D0014••	160	8x7x50	33,0	M10x22	30 h6
P1V-A160D0008••	160	10x8x60	38,0	M10x22	35 h6
P1V-A160D0004••	160	12x8x70	43,0	M12x28	40 h6
P1V-A160D0003••	160	14x9x90	53,5	M16x36	50 h6
P1V-A260D0080••	200	6x6x30	22,5	M8x19	20 h6
P1V-A260D0052••	200	8x7x40	28,0	M8x19	25 h6
P1V-A260D0025••	200	8x7x50	33,0	M10x22	30 h6
P1V-A260D0011••	200	10x8x60	38,0	M10x22	35 h6
P1V-A260D0006••	200	12x8x70	43,0	M12x28	40 h6
P1V-A260D0003••	200	14x9x90	53,5	M16x36	50 h6
P1V-A360D0105••	200	8x7x40	28,0	M8x19	25 h6
P1V-A360D0052••	200	8x7x40	28,0	M8x19	25 h6
P1V-A360D0025••	200	10x8x60	38,0	M10x22	35 h6
P1V-A360D0013••	200	12x8x70	43,0	M12x28	40 h6
P1V-A360D0006••	200	14x9x90	53,5	M16x36	50 h6
P1V-A360D0003••	200	22x14x110	85,0	M20x42	80 h6

••: see previous page for installation positions

Tel: +45 63 12 83 00 | Email: ps@hymatik.com | www.hymatik.com | Hvidkaervej 27a, DK-5250 Odense SV, Denmark

P1V-A Air Motor - Helical Gear

NOTE! All technical data are based on a working pressure of 6 bar and with oil. Speed tolerance accuracy is -+10%.

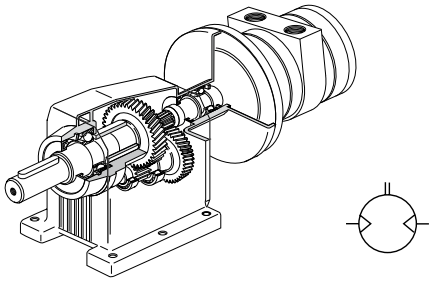

E: Reversible motor with helical gear, foot mounting

Max power kW	Max speed* rpm	Nominal speed rpm	Nominal torque Nm	Min start torque Nm	Max permanent torque** Nm	Air consumption at max power l/s	Connection	Min pipe ID inlet/ outlet mm	Weight Kg	Order code
Series P1V-A160										
1,600	660	590	24	36	45	32	G1/2	15	9,8	**P1V-A160E0066••**
1,600	320	280	50	75	140	32	G1/2	15	11,5	**P1V-A160E0032••**
1,600	140	120	113	171	280	32	G1/2	15	14,4	**P1V-A160E0014••**
1,600	80	70	197	299	560	32	G1/2	15	31,7	**P1V-A160E0008••**
1,600	37	33	413	626	1000	32	G1/2	15	49,2	**P1V-A160E0004••**
1,600	21	18	716	1084	1600	32	G1/2	15	67,2	**P1V-A160E0003••**
Series P1V-A260										
2,600	800	565	42	64	42	60	G3/4	19	14,9	**P1V-A260E0080••**
2,600	520	365	65	100	115	60	G3/4	19	16,1	**P1V-A260E0052••**
2,600	250	175	135	210	235	60	G3/4	19	19,0	**P1V-A260E0025••**
2,600	110	80	302	468	500	60	G3/4	19	36,4	**P1V-A260E0011••**
2,600	55	40	614	951	1000	60	G3/4	19	54,9	**P1V-A260E0006••**
2,600	30	20	990	1530	1600	60	G3/4	19	68,9	**P1V-A260E0003••**
Series P1V-A360										
3,600	1050	625	52	78	80	97	G1	25	24,6	**P1V-A360E0105••**
3,600	520	310	105	155	175	97	G1	25	24,6	**P1V-A360E0052••**
3,600	250	150	216	320	385	97	G1	25	45,0	**P1V-A360E0025••**
3,600	125	74	441	652	795	97	G1	25	63,5	**P1V-A360E0013••**
3,600	62	36	868	1312	1600	97	G1	25	77,5	**P1V-A360E0006••**
3,600	30	18	1800	2670	4000	97	G1	25	151,5	**P1V-A360E0003••**

* maximum admissible speed (idling)

** Max gear box torque for a permanent load

Note!
•• specify installation position in the order code as in the illustrations below.
Example: P1V-A160E0066V5

Note: Oil-bath gearboxes mean that the installation position must be decided in advance. The installation position determines the volume of oil in the gearbox and location of oil filling and drain plugs.

E: Installation positions, helical gear, foot mounting

V5

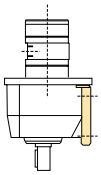

V6

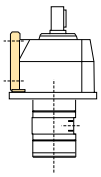

B3

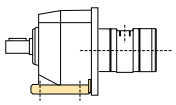

B8

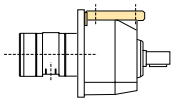

B7

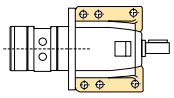

B6

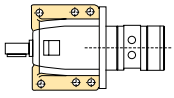

Tel: +45 63 12 83 00 | Email: ps@hymatik.com | www.hymatik.com | Hvidkaervej 27a, DK-5250 Odense SV, Denmark

Dimensions (mm)

E: Motor with helical gear, foot mounting

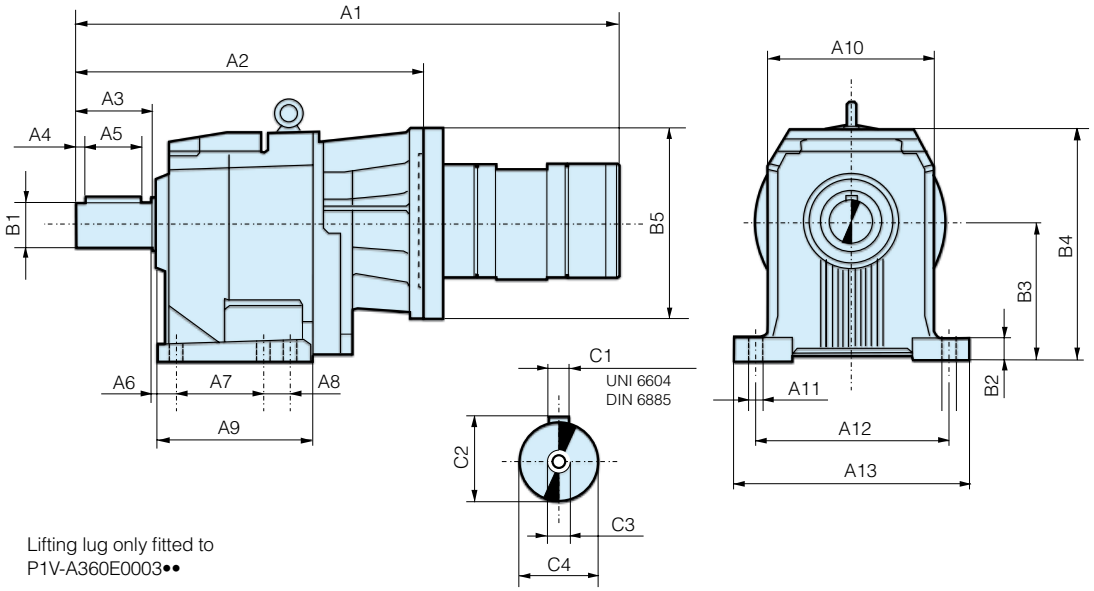

Lifting lug only fitted to
P1V-A360E0003••

Order code	A1	A2	A3	A4	A5	A6	A7	A8	A9	A10	A11	A12	A13	B1	B2	B3
P1V-A160E0066••	370,5	244	40	5	30	18	50	37,0	107,0	95	9	110	130	20	15	85
P1V-A160E0032••	399,5	273	50	5	40	18	60	47,5	137,0	110	11	130	155	25	17	100
P1V-A160E0014••	433,5	307	60	5	50	18	70	60,0	156,0	130	11	160	190	30	20	110
P1V-A160E0008••	463,5	337	70	5	60	20	105	44,5	185,5	155	14	180	216	35	18	130
P1V-A160E0004••	559,5	433	80	5	70	25	110	46,0	200,0	185	18	225	270	40	22	155
P1V-A160E0003••	601,5	475	100	5	90	25	145	35,0	222,0	210	18	250	300	50	25	195
P1V-A260E0080••	413,0	244	40	5	30	18	50	37,0	107,0	95	9	110	130	20	15	85
P1V-A260E0052••	451,0	292	50	5	40	18	60	47,5	137,0	110	11	130	155	25	17	100
P1V-A260E0025••	486,0	327	60	5	50	18	70	60,0	156,0	130	11	160	190	30	20	110
P1V-A260E0011••	515,0	356	70	5	60	20	105	44,5	185,5	155	14	180	216	35	18	130
P1V-A260E0006••	612,0	453	80	5	70	25	110	46,0	200,0	185	18	225	270	40	22	155
P1V-A260E0003••	654,0	495	100	5	90	25	145	35,0	222,0	210	18	250	300	50	25	195
P1V-A360E0105••	457,0	292	50	5	40	18	60	47,5	137,0	110	11	130	155	25	17	100
P1V-A360E0052••	457,0	292	50	5	40	18	60	47,5	137,0	110	11	130	155	25	17	100
P1V-A360E0025••	521,0	356	70	5	60	20	105	44,5	185,5	155	14	180	216	35	18	130
P1V-A360E0013••	547,0	382	80	5	70	25	110	46,0	200,0	185	18	225	270	40	22	155
P1V-A360E0006••	660,0	495	100	5	90	25	145	35,0	222,0	210	18	250	300	50	25	195
P1V-A360E0003••	699,0	534	140	15	110	33	210	—	277,0	320	26	370	440	80	35	250

Order code	B4	B5	C1	C2	C3	C4
P1V-A160E0066••	141	160	6x6x30	22,5	M8x19	20 h6
P1V-A160E0032••	166	160	8x7x40	28,0	M8x19	25 h6
P1V-A160E0014••	181	160	8x7x50	33,0	M10x22	30 h6
P1V-A160E0008••	223	160	10x8x60	38,0	M10x22	35 h6
P1V-A160E0004••	278	160	12x8x70	43,0	M12x28	40 h6
P1V-A160E0003••	316	160	14x9x90	53,5	M16x36	50 h6
P1V-A260E0080••	141	200	6x6x30	22,5	M8x19	20 h6
P1V-A260E0052••	166	200	8x7x40	28,0	M8x19	25 h6
P1V-A260E0025••	181	200	8x7x50	33,0	M10x22	30 h6
P1V-A260E0011••	223	200	10x8x60	38,0	M10x22	35 h6
P1V-A260E0006••	278	200	12x8x70	43,0	M12x28	40 h6
P1V-A260E0003••	316	200	14x9x90	53,5	M16x36	50 h6
P1V-A360E0105••	166	200	8x7x40	28,0	M8x19	25 h6
P1V-A360E0052••	166	200	8x7x40	28,0	M8x19	25 h6
P1V-A360E0025••	223	200	10x8x60	38,0	M10x22	35 h6
P1V-A360E0013••	278	200	12x8x70	43,0	M12x28	40 h6
P1V-A360E0006••	316	200	14x9x90	53,5	M16x36	50 h6
P1V-A360E0003••	420	200	22x14x110	85,0	M20x42	80 h6

••: see previous page for installation positions

Tel: +45 63 12 83 00 | Email: ps@hymatik.com | www.hymatik.com | Hvidkaervej 27a, DK-5250 Odense SV, Denmark

P1V-A Air Motor - Worm Gear

NOTE! All technical data are based on a working pressure of 6 bar and with oil. Speed tolerance accuracy is -+10%.

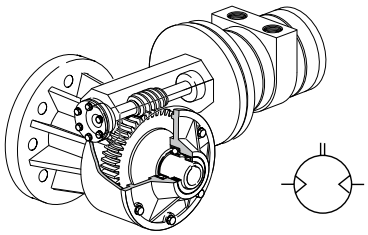

F: Reversible motor with worm gear, flange mounting left-hand

Max power kW	Max speed* rpm	Nominal speed rpm	Nominal torque Nm	Min start torque Nm	Max permanent torque** Nm	Types of self-locking	Air consumption at max power l/s	Connection	Min pipe ID inlet/ outlet mm	Weight Kg	Order code
Series P1V-A160											
1,600	430	320	38	40	44	1	32	G1/2	15	7,2	**P1V-A160F0043••**
1,600	200	150	77	65	125	2	32	G1/2	15	10,5	**P1V-A160F0020••**
1,600	95	70	154	117	250	3	32	G1/2	15	17,8	**P1V-A160F0010••**
1,600	75	55	180	130	225	3	32	G1/2	15	17,8	**P1V-A160F0008••**
Series P1V-A260											
2,600	500	350	62	71	125	1	60	G3/4	19	14,5	**P1V-A260F0050••**
2,600	220	150	133	133	285	1	60	G3/4	19	21,0	**P1V-A260F0022••**
2,600	125	85	224	191	430	2	60	G3/4	19	21,0	**P1V-A260F0013••**
2,600	62	44	415	308	660	3	60	G3/4	19	57,0	**P1V-A260F0008••**
Series P1V-A360											
3,600	500	300	98	113	125	1	97	G1	25	22,9	**P1V-A360F0050••**
3,600	220	130	224	230	285	1	97	G1	25	31,0	**P1V-A360F0022••**
3,600	125	75	368	317	595	2	97	G1	25	55,0	**P1V-A360F0013••**
3,600	62	37	670	480	660	3	97	G1	25	65,5	**P1V-A360F0006••**

* maximum admissible speed (idling)

** Max gear box torque for a permanent load

Note!
•• specify installation position in the order code as in the illustrations below.
Example: P1V-A160F0043B3

F: Installation positions, worm gear, flange mounting left-hand

B3

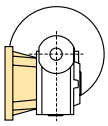

V6

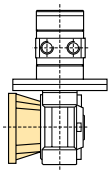

V5

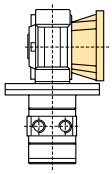

B8

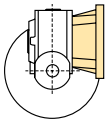

B6

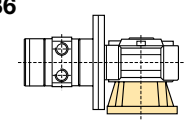

B7

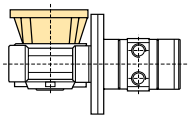

Note: Oil-bath gearboxes mean that the installation position must be decided in advance. The installation position determines the volume of oil in the gearbox and location of oil filling and drain plugs.

Self-locking

Dynamic self-locking means that the force acting on the output shaft of the gear can not turn the gear further when the air motor is stopped. Dynamic self-locking is only possible when the gear ratio is high, and at low speeds. None of our worm drive gears are completely self-locking in dynamic conditions.

Static self-locking means that the force acting on the output shaft of the gear can not begin to turn the shaft.

When loads with considerable momentum are driven, it is necessary to have a braking time sufficient to stop the gearbox from being over-loaded. It is extremely important that the maximum permitted torque is not exceeded.

Tip: Braking of the air motor can be arranged by either slowly restricting the air supply to the motor until it is completely shut off, or by slowly reducing the supply pressure to zero.

Types of Self-locking

1. Static, not self-locking
2. Static, self-locking - quicker return under vibration - not dynamically self-locking
3. Static, self-locking - return only possible under vibration - good dynamic self-locking

Important!
Since it is practically impossible to guarantee total self-locking, an external brake must be used to guarantee that vibration can not cause an output shaft to move.

Tel: +45 63 12 83 00 | Email: ps@hymatik.com | www.hymatik.com | Hvidkaervej 27a, DK-5250 Odense SV, Denmark

Dimensions (mm)

F: Motor with worm gear, flange mounting

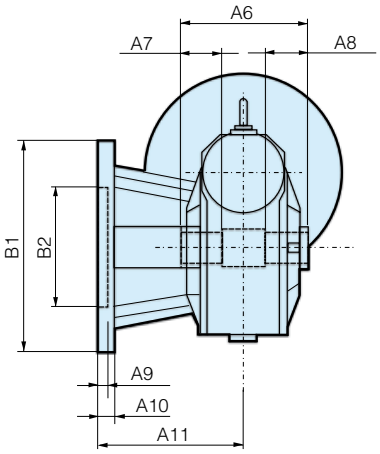

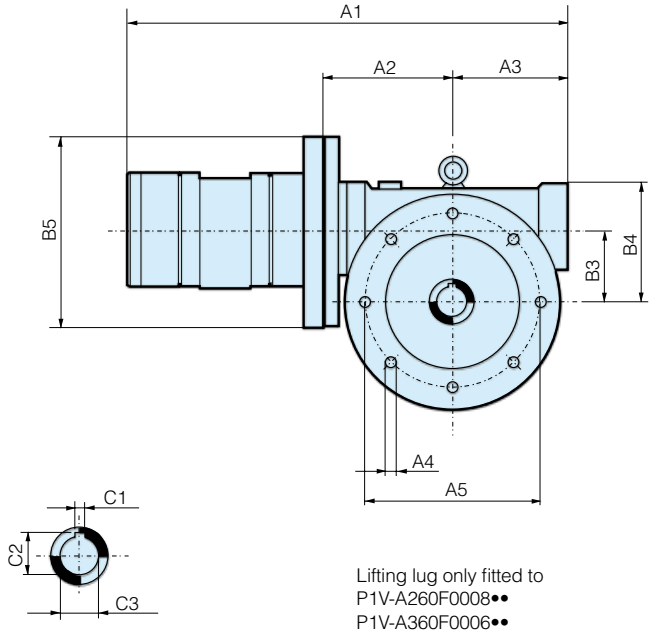

Lifting lug only fitted to
P1V-A260F0008••
P1V-A360F0006••

As standard, the motor has a hollow shaft with key slot. Please refer to page 44 for a dimension sketch of the single ended and double ended shafts and for additional flange on the opposite side.

Order code	A1	A2	A3	A4	A5	A6	A7	A8	A9	A10	A11	B1	B2	B3
P1V-A160F0043••	259,5	70	63	10,5	90	82	22,5	22,5	10	12	85,0	125	70 H8	49,50
P1V-A160F0020••	301,5	95	80	10,5	130	120	40,0	40,0	8	11	116,0	180	115 H8	62,17
P1V-A160F0010••	362,5	126	110	12,5	176	140	45,0	45,0	15	15	151,0	210	152 H8	86,90
P1V-A160F0008••	362,5	126	110	12,5	176	140	45,0	45,0	15	15	151,0	210	152 H8	86,90
P1V-A260F0050••	292,0	70	63	10,5	90	82	22,5	22,5	10	12	85,0	125	70 H8	49,50
P1V-A260F0022••	395,0	126	110	12,5	176	140	45,0	45,0	15	15	151,0	210	152 H8	86,90
P1V-A260F0013••	395,0	126	110	12,5	176	140	45,0	45,0	15	15	151,0	210	152 H8	86,90
P1V-A260F0008••	498,0	185	154	16,0	255	165	52,5	52,5	18	20	197,5	320	180 H8	130,00
P1V-A360F0050••	340,0	95	80	10,5	130	120	40,0	40,0	8	11	116,0	180	115 H8	62,17
P1V-A360F0022••	401,0	126	110	12,5	176	140	45,0	45,0	15	15	151,0	210	152 H8	86,90
P1V-A360F0013••	456,0	153	138	13,5	230	155	45,0	45,0	18	20	179,5	280	170 H8	110,10
P1V-A360F0006••	504,0	185	154	16,0	255	165	52,5	52,5	18	20	197,5	320	180 H8	130,00

Order code	B4	B5	C1	C2	C3
P1V-A160F0043••	80,0	160	8 H8	28,3	25 H7
P1V-A160F0020••	98,5	160	8 H8	28,3	25 H7
P1V-A160F0010••	138,0	160	10 H8	38,3	35 H7
P1V-A160F0008••	138,0	160	10 H8	38,3	35 H7
P1V-A260F0050••	80,0	200	8 H8	28,3	25 H7
P1V-A260F0022••	138,0	200	10 H8	38,3	35 H7
P1V-A260F0013••	138,0	200	10 H8	38,3	35 H7
P1V-A260F0008••	195,0	200	14 H8	48,8	45 H7
P1V-A360F0050••	98,5	200	8 H8	28,3	25 H7
P1V-A360F0022••	138,0	200	10 H8	38,3	35 H7
P1V-A360F0013••	169,0	200	12 H8	45,3	42 H7
P1V-A360F0006••	195,0	200	14 H8	48,8	45 H7

••: see previous page for installation positions

Tel: +45 63 12 83 00 | Email: ps@hymatik.com | www.hymatik.com | Hvidkaervej 27a, DK-5250 Odense SV, Denmark

P1V-A Air Motor - Worm Gear

NOTE! All technical data are based on a working pressure of 6 bar and with oil. Speed tolerance accuracy is -+10%.

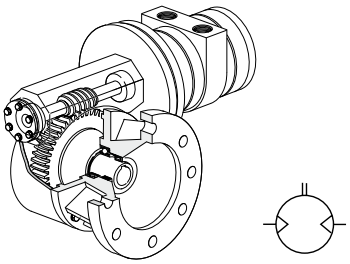

G: Reversible motor with worm gear, flange mounting right-hand

Max power	Max speed*	Nominal speed	Nominal torque	Min start torque	Max permanent torque**	Types of self-locking	Air consumption at max power	Connection	Min pipe ID inlet/ outlet	Weight	Order code
kW	rpm	rpm	Nm	Nm	Nm		l/s		mm	Kg	
Series P1V-A160											
1,600	430	320	38	40	44	1	32	G1/2	15	7,2	**P1V-A160G0043••**
1,600	200	150	77	65	125	2	32	G1/2	15	10,5	**P1V-A160G0020••**
1,600	95	70	154	117	250	3	32	G1/2	15	17,8	**P1V-A160G0010••**
1,600	75	55	180	130	225	3	32	G1/2	15	17,8	**P1V-A160G0008••**
Series P1V-A260											
2,600	500	350	62	71	125	1	60	G3/4	19	14,5	**P1V-A260G0050••**
2,600	220	150	133	133	285	1	60	G3/4	19	21,0	**P1V-A260G0022••**
2,600	125	85	224	191	430	2	60	G3/4	19	21,0	**P1V-A260G0013••**
2,600	62	44	415	308	660	3	60	G3/4	19	57,0	**P1V-A260G0008••**
Series P1V-A360											
3,600	500	300	98	113	125	1	97	G1	25	22,9	**P1V-A360G0050••**
3,600	220	130	224	230	285	1	97	G1	25	31,0	**P1V-A360G0022••**
3,600	125	75	368	317	595	2	97	G1	25	55,0	**P1V-A360G0013••**
3,600	62	37	670	480	660	3	97	G1	25	65,5	**P1V-A360G0006••**

* maximum admissible speed (idling)
** Max gear box torque for a permanent load

Note!
•• specify installation position in the order code as in the illustrations below.
Example: P1V-A160G0043B3

G: Installation positions, worm gear gear, flange mounting right-hand

B3

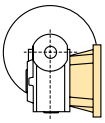

V6

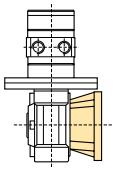

V5

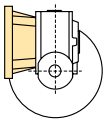

B8

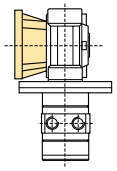

B6

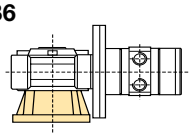

B7

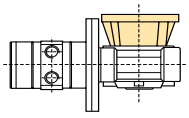

Note: Oil-bath gearboxes mean that the installation position must be decided in advance. The installation position determines the volume of oil in the gearbox and location of oil filling and drain plugs.

Self-locking shafts and for additional flange on the opposite side.

Dynamic self-locking means that the force acting on the output shaft of the gear can not turn the gear further when the air motor is stopped. Dynamic self-locking is only possible when the gear ratio is high, and at low speeds. None of our worm drive gears are completely self-locking in dynamic conditions.

Static self-locking means that the force acting on the output shaft of the gear can not begin to turn the shaft.

When loads with considerable momentum are driven, it is necessary to have a braking time sufficient to stop the gearbox from being over-loaded. It is extremely important that the maximum permitted torque is not exceeded.

Tip: Braking of the air motor can be arranged by either slowly restricting the air supply to the motor until it is completely shut off, or by slowly reducing the supply pressure to zero.

Types of Self-locking

1. Static, not self-locking
2. Static, self-locking - quicker return under vibration - not dynamically self-locking
3. Static, self-locking - return only possible under vibration - good dynamic self-locking

Important!
Since it is practically impossible to guarantee total self-locking, an external brake must be used to guarantee that vibration can not cause an output shaft to move.

Tel: +45 63 12 83 00 | Email: ps@hymatik.com | www.hymatik.com | Hvidkaervej 27a, DK-5250 Odense SV, Denmark

Dimensions (mm)

G: Motor with worm gear, flange mounting

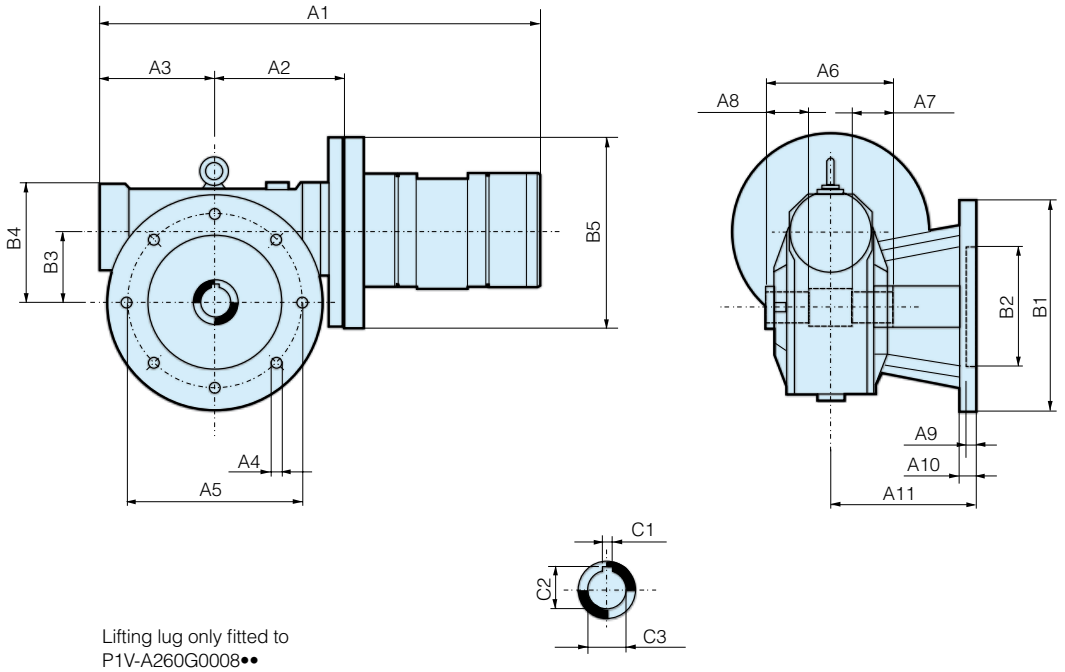

Lifting lug only fitted to
P1V-A260G0008••
P1V-A360G0006••

As standard, the motor has a hollow shaft with key slot. Please refer to page 44 for a dimension sketch of the single ended and double ended shafts and for additional flange on the opposite side.

Order code	A1	A2	A3	A4	A5	A6	A7	A8	A9	A10	A11	B1	B2	B3
P1V-A160G0043••	259,5	70	63	10,5	90	82	22,5	22,5	10	12	85,0	125	70 H8	49,50
P1V-A160G0020••	301,5	95	80	10,5	130	120	40,0	40,0	8	11	116,0	180	115 H8	62,17
P1V-A160G0010••	362,5	126	110	12,5	176	140	45,0	45,0	15	15	151,0	210	152 H8	86,90
P1V-A160G0008••	362,5	126	110	12,5	176	140	45,0	45,0	15	15	151,0	210	152 H8	86,90
P1V-A260G0050••	292,0	70	63	10,5	90	82	22,5	22,5	10	12	85,0	125	70 H8	49,50
P1V-A260G0022••	395,0	126	110	12,5	176	140	45,0	45,0	15	15	151,0	210	152 H8	86,90
P1V-A260G0013••	395,0	126	110	12,5	176	140	45,0	45,0	15	15	151,0	210	152 H8	86,90
P1V-A260G0008••	498,0	185	154	16,0	255	165	52,5	52,5	18	20	197,5	320	180 H8	130,00
P1V-A360G0050••	340,0	95	80	10,5	130	120	40,0	40,0	8	11	116,0	180	115 H8	62,17
P1V-A360G0022••	401,0	126	110	12,5	176	140	45,0	45,0	15	15	151,0	210	152 H8	86,90
P1V-A360G0013••	456,0	153	138	13,5	230	155	45,0	45,0	18	20	179,5	280	170 H8	110,10
P1V-A360G0006••	504,0	185	154	16,0	255	165	52,5	52,5	18	20	197,5	320	180 H8	130,00

Order code	B4	B5	C1	C2	C3
P1V-A160G0043••	80,0	160	8 H8	28,3	25 H7
P1V-A160G0020••	98,5	160	8 H8	28,3	25 H7
P1V-A160G0010••	138,0	160	10 H8	38,3	35 H7
P1V-A160G0008••	138,0	160	10 H8	38,3	35 H7
P1V-A260G0050••	80,0	200	8 H8	28,3	25 H7
P1V-A260G0022••	138,0	200	10 H8	38,3	35 H7
P1V-A260G0013••	138,0	200	10 H8	38,3	35 H7
P1V-A260G0008••	195,0	200	14 H8	48,8	45 H7
P1V-A360G0050••	98,5	200	8 H8	28,3	25 H7
P1V-A360G0022••	138,0	200	10 H8	38,3	35 H7
P1V-A360G0013••	169,0	200	12 H8	45,3	42 H7
P1V-A360G0006••	195,0	200	14 H8	48,8	45 H7

••: see previous page for installation positions

Tel: +45 63 12 83 00 | Email: ps@hymatik.com | www.hymatik.com | Hvidkaervej 27a, DK-5250 Odense SV, Denmark

P1V-A Air Motor - Worm Gear

NOTE! All technical data are based on a working pressure of 6 bar and with oil. Speed tolerance accuracy is -+10%.

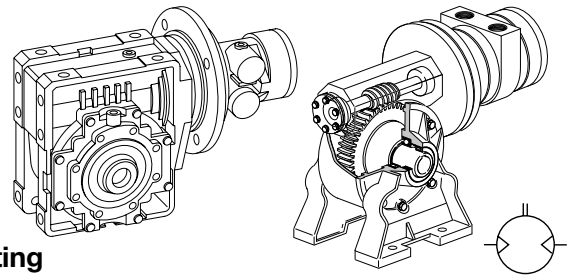

H: Reversible motor with worm gear, foot mounting

Max power kW	Max speed* rpm	Nominal speed rpm	Nominal torque Nm	Min start torque Nm	Max permanent torque** Nm	Types of self-locking	Air consumption at max power l/s	Connection	Min pipe ID inlet/ outlet mm	Weight Kg	Order code
Series P1V-A160											
1,600	430	320	38	40	44	1	32	G1/2	15	7,2	**P1V-A160H0043••**
1,600	200	150	77	65	125	2	32	G1/2	15	10,2	**P1V-A160H0020••**
1,600	95	70	154	177	250	3	32	G1/2	15	20,5	**P1V-A160H0010••**
1,600	75	55	180	130	225	3	32	G1/2	15	20,5	**P1V-A160H0008••**
Series P1V-A260											
2,600	500	350	62	90	125	1	60	G3/4	19	11,0	**P1V-A260H0050••**
2,600	220	150	133	206	285	1	60	G3/4	19	21,0	**P1V-A260H0022••**
2,600	125	85	224	330	430	2	60	G3/4	19	21,0	**P1V-A260H0013••**
2,600	62	44	415	308	660	3	60	G3/4	19	57,0	**P1V-A260H0008••**
Series P1V-A360											
3,600	500	300	98	113	125	1	97	G1	25	22,5	**P1V-A360H0050••**
3,600	220	130	224	230	285	1	97	G1	25	33,0	**P1V-A360H0022••**
3,600	125	75	368	317	595	2	97	G1	25	49,0	**P1V-A360H0013••**
3,600	62	37	670	480	660	3	97	G1	25	65,5	**P1V-A360H0006••**

* maximum admissible speed (idling)
** Max gear box torque for a permanent load

Note!
•• specify installation position in the order code as in the illustrations below.
Example: P1V-A160H0043B3

H: Installation positions, worm gear, foot mounting

B3

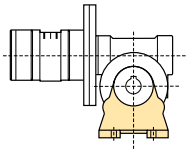

V6

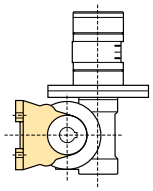

V5

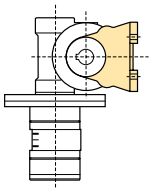

B8

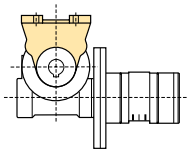

B6

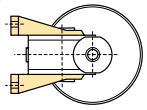

B7

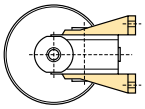

Note: Oil-bath gearboxes mean that the installation position must be decided in advance. The installation position determines the volume of oil in the gearbox and location of oil filling and drain plugs.

Self-locking

Dynamic self-locking means that the force acting on the output shaft of the gear can not turn the gear further when the air motor is stopped. Dynamic self-locking is only possible when the gear ratio is high, and at low speeds. None of our worm drive gears are completely self-locking in dynamic conditions.

Static self-locking means that the force acting on the output shaft of the gear can not begin to turn the shaft.

When loads with considerable momentum are driven, it is necessary to have a braking time sufficient to stop the gearbox from being overloaded. It is extremely important that the maximum permitted torque is not exceeded.

Tip: Braking of the air motor can be arranged by either slowly restricting the air supply to the motor until it is completely shut off, or by slowly reducing the supply pressure to zero.

Types of Self-locking

1. Static, not self-locking
2. Static, self-locking - quicker return under vibration - not dynamically self-locking
3. Static, self-locking - return only possible under vibration - good dynamic self-locking

Important!
Since it is practically impossible to guarantee total self-locking, an external brake must be used to guarantee that vibration can not cause an output shaft to move.

Tel: +45 63 12 83 00 | Email: ps@hymatik.com | www.hymatik.com | Hvidkaervej 27a, DK-5250 Odense SV, Denmark

Dimensions (mm)

H: Motor with worm gear, foot mounting

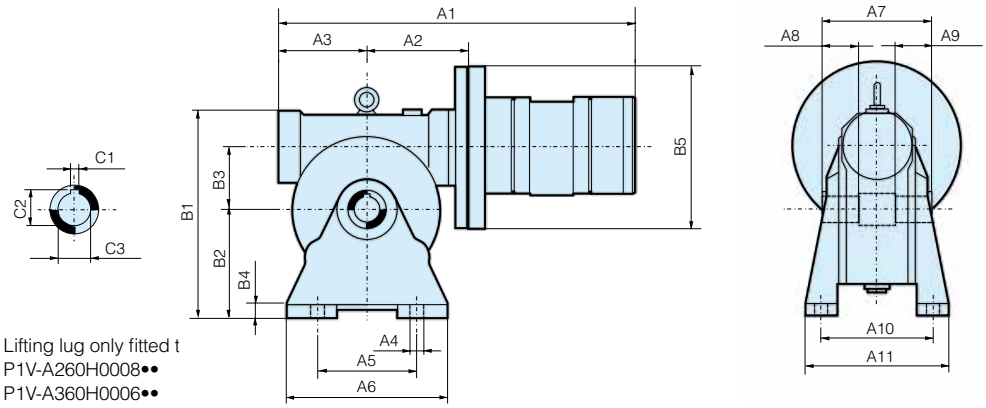

Lifting lug only fitted t
P1V-A260H0008••
P1V-A360H0006••

Order code		A1	A2	A3	A4	A5	A6	A7	A8	A9	A10	A11	B1	B2	B3
P1V-A160H0043••	259,5	70	63	8,5	63	110	82	22,5	22,5	98,5	124	162	82	49,50	
P1V-A260H0008••	498,0	185	154	16,0	220	310	165	52,5	52,5	191,0	245	398	195	130,00	
P1V-A360H0006••	504,0	185	154	16,0	220	310	165	52,5	52,5	191,0	245	398	195	130,00	

		B4	B5	C1	C2	C3
P1V-A160H0043••	12	160	8 H8	28,3	25 H7	
P1V-A260H0008••	18	200	14 H8	48,8	45 H7	
P1V-A360H0006••	18	200	14 H8	48,8	45 H7	

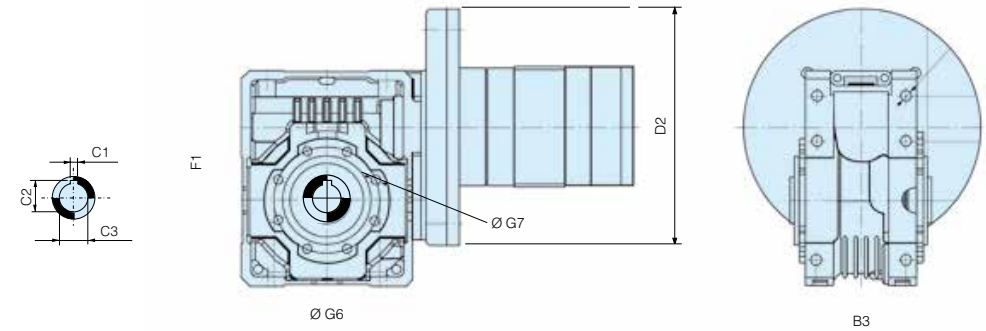

Order code	A1	A2	A3	A5	A6	B3	D2	F1	F2	F3	F4	F5	F6	Ø F7
P1V-A160H0020••	294,5	95	127	72,5	102	120	160	62,2	110,0	182,5	72,5	102	37,5	9,0
P1V-A160H0010••	355,0	128	127	100,0	144	140	160	86,9	145,5	245,5	100,0	144	45,5	11,5
P1V-A160H0008••	355,0	128	127	100,0	144	140	160	86,9	145,5	245,5	100,0	144	45,5	11,5
P1V-A260H0050••	333,5	102	159	72,5	102	120	200	62,2	110,0	182,5	72,5	102	37,5	9,0
P1V-A260H0022••	387,0	128	159	100,0	144	140	200	86,9	145,5	245,5	100,0	144	45,5	11,5
P1V-A260H0013••	387,0	128	159	100,0	144	140	200	86,9	145,5	245,5	100,0	144	45,5	11,5
P1V-A360H0050••	334,5	102	165	72,5	102	120	200	62,2	110,0	182,5	72,5	102	37,5	9,0
P1V-A360H0022••	393,0	128	165	100,0	144	140	200	86,9	145,5	245,5	100,0	144	45,5	11,5
P1V-A360H0013••	433,0	143	165	125,0	174	155	200	110,1	183,0	308,0	125,0	184	58,0	14,0

Order code	F8	G1	Ø G6	Ø G7	C1 (H8)	C2	C3 (H7)
P1V-A160H0020••	76	56,0	90	M8 depth 14	8	28,3	25
P1V-A160H0010••	101	68,0	130	M10 depth 18	10	38,3	35
P1V-A160H0008••	101	68,0	130	M10 depth 18	10	38,3	35
P1V-A260H0050••	76	53,0	90	M8 depth 14	8	28,3	25
P1V-A260H0022••	101	68,0	130	M10 depth 18	10	38,3	35
P1V-A260H0013••	101	68,0	130	M10 depth 18	10	38,3	35
P1V-A360H0050••	76	56,0	90	M8 depth 14	8	28,3	25
P1V-A360H0022••	101	68,0	130	M10 depth 18	10	38,3	35
P1V-A360H0013••	115	76,5	135	M12 depth 19	12	45,3	42

••: see previous page for installation positions

Tel: +45 63 12 83 00 | Email: ps@hymatik.com | www.hymatik.com | Hvidkaervej 27a, DK-5250 Odense SV, Denmark

Radial piston air motors P1V-P

P1V-P is a range of air motors using the radial piston principle. Radial piston motors can operate at a low speed while delivering high torque. The low speed keeps the noise level to a minimum, making this type of motor suitable for all applications that are subject to stringent noise level requirements.



- Three basic motors with 73.5, 125 and 228 watt power at 5 bar supply pressure
- Various gearboxes are available for these motors, to provide the right speed and torque for every application
- Equipped with a spring-loaded braking unit
- The medium used by the P1V-P is oil mist. This makes the motors unique in that they require no servicing at all.

Operating information

Working pressure:	Max 6 bar
Temperature range:	-10°C to +70°C
Medium	Oil mist, dry compressed air purity class 3.4.4 according to ISO8573-1
Gearboxes	Grease lubricated

For more information see www.parker.com/euro_pneumatic

Order key

P1V-P **012** **F** **B** **0060**

Air motor range

P1V-P	Radial piston motor

Motor size

007	74 W
012	125 W
023	228 W

Function

A	Basic motor
B	Flange version
F	Foot version

Function

0	Standard
B	Brake

Free speed/min

2200	2200
–	–
0007	7

P1V-P0072200**

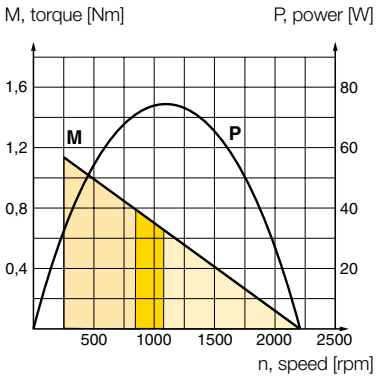

P1V-P0121800**

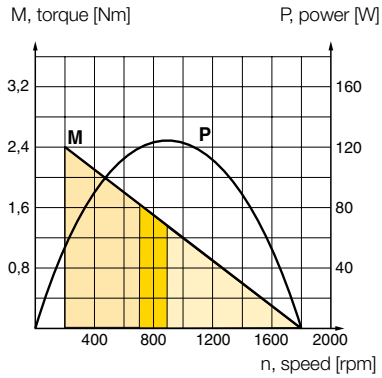

P1V-P0231500**

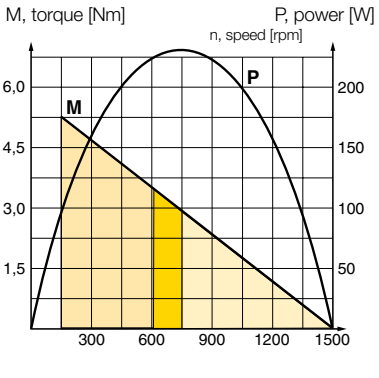

Possible working range of motor. **Optimum working range of motor.** **Working range with shorter service life.**

Parker Hannifin Corporation
Pneumatic Division - Europe

Tel: +45 63 12 83 00 | Email: ps@hymatik.com | www.hymatik.com | Hvidkaervej 27a, DK-5250 Odense SV, Denmark

Note! All technical data is based on a working pressure of 5 bar.





Data for reversible basic motor

Max power kW	Speed at max power rpm	Torque at max power Nm	Min start torque Nm	Stall torque Nm	Brake torque Nm	Air consumption at max power l/s	Conn.	Min pipe ID mm	Weight Kg	Order code
0,0735	1100	0,637	0,686	1,18	-	3,34	G1/4	6	1,45	**P1V-P007A02200**
0,125	900	1,37	1,96	2,94	-	4,34	G1/4	10	2,5	**P1V-P012A01800**
0,228	750	2,94	4,71	5,88	-	6,67	G3/8	10	4,6	**P1V-P023A01500**

Data for reversible basic motor with flange

Max power kW	Speed at max power rpm	Torque at max power Nm	Min start torque Nm	Stall torque Nm	Brake torque Nm	Air consumption at max power l/s	Conn.	Min pipe ID mm	Weight Kg	Order code
0,0735	1100	0,637	0,686	1,18	-	3,34	G1/4	6	1,45	**P1V-P007B02200**
0,125	900	1,37	1,96	2,94	-	4,34	G1/4	10	2,5	**P1V-P012B01800**
0,228	750	2,94	4,71	5,88	-	6,67	G3/8	10	4,6	**P1V-P023B01500**

Data for reversible basic motor with foot

Max power kW	Speed at max power rpm	Torque at max power Nm	Min start torque Nm	Stall torque Nm	Brake torque Nm	Air consumption at max power l/s	Conn.	Min pipe ID mm	Weight Kg	Order code
0,0735	1100	0,637	0,686	1,18	-	3,34	G1/4	6	1,45	**P1V-P007F02200**
0,125	900	1,37	1,96	2,94	-	4,34	G1/4	10	2,5	**P1V-P012F01800**
0,228	750	2,94	4,71	5,88	-	6,67	G3/8	10	4,6	**P1V-P023F01500**

Note! All technical data is based on a working pressure of 5 bar.





Data for reversible basic motor with brake

Max power kW	Speed at max power rpm	Torque at max power Nm	Min start torque Nm	Stall torque Nm	Brake torque Nm	Air consumption at max power l/s	Conn.	Min pipe ID mm	Weight Kg	Order code
0,125	900	1,37	1,96	2,94	3,24	4,34	G1/4	10	4,4	**P1V-P012AB1800**
0,228	750	2,94	4,71	5,88	6,47	6,67	G3/8	10	7,8	**P1V-P023AB1500**

Data for reversible basic motor with brake and flange

Max power kW	Speed at max power rpm	Torque at max power Nm	Min start torque Nm	Stall torque Nm	Brake torque Nm	Air consumption at max power l/s	Conn.	Min pipe ID mm	Weight Kg	Order code
0,125	900	1,37	1,96	2,94	3,24	4,34	G1/4	10	4,4	**P1V-P012BB1800**
0,228	750	2,94	4,71	5,88	6,47	6,67	G3/8	10	7,8	**P1V-P023BB1500**

Data for reversible basic motor with brake and foot

Max power kW	Speed at max power rpm	Torque at max power Nm	Min start torque Nm	Stall torque Nm	Brake torque Nm	Air consumption at max power l/s	Conn.	Min pipe ID mm	Weight Kg	Order code
0,125	900	1,37	1,96	2,94	3,24	4,34	G1/4	10	5,2	**P1V-P012FB1800**
0,228	750	2,94	4,71	5,88	6,47	6,67	G3/8	10	9,4	**P1V-P023FB1500**

Tel: +45 63 12 83 00 | Email: ps@hymatik.com | www.hymatik.com | Hvidkaervej 27a, DK-5250 Odense SV, Denmark

Note! All technical data is based on a working pressure of 5 bar.



Data for reversible motor with gearbox and flange



Max power kW	Speed at max power rpm	Torque at max power Nm	Min start torque Nm	Stall torque Nm	Brake torque Nm	Air consumption at max power l/s	Conn.	Min pipe ID mm	Weight Kg	Order code
0,0662	220	2,84	2,94	4,90	-	3,34	G1/4	6	4,0	**P1V-P007B00440**
0,0662	110	5,69	5,88	9,81	-	3,34	G1/4	6	4,0	**P1V-P007B00220**
0,0662	73,3	8,53	8,83	15,7	-	3,34	G1/4	6	4,0	**P1V-P007B00147**
0,0662	55	11,5	11,8	20,6	-	3,34	G1/4	6	4,0	**P1V-P007B00110**
0,110	180	5,88	8,83	12,7	-	4,34	G1/4	10	6,7	**P1V-P012B00360**
0,110	90	11,8	17,7	26,5	-	4,34	G1/4	10	6,7	**P1V-P012B00180**
0,110	60	17,7	26,5	39,2	-	4,34	G1/4	10	6,7	**P1V-P012B00120**
0,110	45	23,5	35,3	53,0	-	4,34	G1/4	10	6,7	**P1V-P012B00090**
0,110	30	35,3	53,0	78,5	-	4,34	G1/4	10	8,7	**P1V-P012B00060**
0,110	22,5	47,1	70,6	106	-	4,34	G1/4	10	8,7	**P1V-P012B00050**
0,110	18	58,8	79,4	132	-	4,34	G1/4	10	8,7	**P1V-P012B00040**
0,110	15	70,6	106	157	-	4,34	G1/4	10	8,7	**P1V-P012B00030**
0,110	11,2	93,2	139	206	-	4,34	G1/4	10	8,7	**P1V-P012B00022**
0,103	9	118	175	250	-	4,34	G1/4	10	11,7	**P1V-P012B00018**
0,103	7,5	137	206	300	-	4,34	G1/4	10	11,7	**P1V-P012B00015**
0,103	5,6	176	261	373	-	4,34	G1/4	10	11,7	**P1V-P012B00012**
0,103	4,5	233	350	500	-	4,34	G1/4	10	11,7	**P1V-P012B00009**
0,199	150	12,7	20,6	26,5	-	6,67	G3/8	10	10,5	**P1V-P023B00300**
0,199	75	26,5	41,2	53,0	-	6,67	G3/8	10	10,5	**P1V-P023B00150**
0,199	50	39,2	61,8	79,4	-	6,67	G3/8	10	10,5	**P1V-P023B00100**
0,199	37,5	53,0	82,4	106	-	6,67	G3/8	10	10,5	**P1V-P023B00075**
0,199	25	78,5	124	159	-	6,67	G3/8	10	14,0	**P1V-P023B00050**
0,199	18,7	106	165	212	-	6,67	G3/8	10	14,0	**P1V-P023B00038**
0,199	15	132	206	265	-	6,67	G3/8	10	14,0	**P1V-P023B00030**
0,199	12,5	157	247	318	-	6,67	G3/8	10	14,0	**P1V-P023B00025**
0,199	9,3	203	314	402	-	6,67	G3/8	10	14,0	**P1V-P023B00018**
0,191	7,5	250	392	490	-	6,67	G3/8	10	20,5	**P1V-P023B00015**
0,191	6,2	300	471	598	-	6,67	G3/8	10	20,5	**P1V-P023B00012**
0,191	4,6	396	628	785	-	6,67	G3/8	10	20,5	**P1V-P023B00009**
0,191	3,7	500	785	981	-	6,67	G3/8	10	20,5	**P1V-P023B00007**

Tel: +45 63 12 83 00 | Email: ps@hymatik.com | www.hymatik.com | Hvidkaervej 27a, DK-5250 Odense SV, Denmark

Note! All technical data is based on a working pressure of 5 bar.



Data for reversible motor with gearbox and foot



Max power kW	Speed at max power rpm	Torque at max power Nm	Min start torque Nm	Stall torque Nm	Brake torque Nm	Air consumption at max power l/s	Conn.	Min pipe ID mm	Weight Kg	Order code
0,0662	220	2,84	2,94	4,90	-	3,34	G1/4	6	3,5	**P1V-P007F00440**
0,0662	110	5,69	5,88	9,81	-	3,34	G1/4	6	4,0	**P1V-P007F00220**
0,0662	73,3	8,53	8,83	15,7	-	3,34	G1/4	6	3,5	**P1V-P007F00147**
0,0662	55	11,5	11,8	20,6	-	3,34	G1/4	6	3,5	**P1V-P007F00110**
0,110	180	5,88	8,83	12,7	-	4,34	G1/4	10	6,2	**P1V-P012F00360**
0,110	90	11,8	17,7	26,5	-	4,34	G1/4	10	6,2	**P1V-P012F00180**
0,110	60	17,7	26,5	39,2	-	4,34	G1/4	10	6,2	**P1V-P012F00120**
0,110	45	23,5	35,3	53,0	-	4,34	G1/4	10	6,2	**P1V-P012F00090**
0,110	30	35,3	53,0	78,5	-	4,34	G1/4	10	8,2	**P1V-P012F00060**
0,110	22,5	47,1	70,6	106	-	4,34	G1/4	10	8,2	**P1V-P012F00050**
0,110	18	58,8	79,4	132	-	4,34	G1/4	10	8,2	**P1V-P012F00040**
0,110	15	70,6	106	157	-	4,34	G1/4	10	8,2	**P1V-P012F00030**
0,110	11,2	93,2	139	206	-	4,34	G1/4	10	8,2	**P1V-P012F00022**
0,103	9	118	175	250	-	4,34	G1/4	10	11,2	**P1V-P012F00018**
0,103	7,5	137	206	300	-	4,34	G1/4	10	11,2	**P1V-P012F00015**
0,103	5,6	176	261	373	-	4,34	G1/4	10	11,2	**P1V-P012F00012**
0,103	4,5	233	350	500	-	4,34	G1/4	10	11,2	**P1V-P012F00009**
0,199	150	12,7	20,6	26,5	-	6,67	G3/8	10	10,0	**P1V-P023F00300**
0,199	75	26,5	41,2	53,0	-	6,67	G3/8	10	10,0	**P1V-P023F00150**
0,199	50	39,2	61,8	79,4	-	6,67	G3/8	10	10,0	**P1V-P023F00100**
0,199	37,5	53,0	82,4	106	-	6,67	G3/8	10	10,0	**P1V-P023F00075**
0,199	25	78,5	124	159	-	6,67	G3/8	10	13,5	**P1V-P023F00050**
0,199	18,7	106	165	212	-	6,67	G3/8	10	13,5	**P1V-P023F00038**
0,199	15	132	206	265	-	6,67	G3/8	10	13,5	**P1V-P023F00030**
0,199	12,5	157	247	318	-	6,67	G3/8	10	13,5	**P1V-P023F00025**
0,199	9,3	203	314	402	-	6,67	G3/8	10	13,5	**P1V-P023F00018**
0,191	7,5	250	392	490	-	6,67	G3/8	10	20,0	**P1V-P023F00015**
0,191	6,2	300	471	598	-	6,67	G3/8	10	20,0	**P1V-P023F00012**
0,191	4,6	396	628	785	-	6,67	G3/8	10	20,0	**P1V-P023F00009**
0,191	3,7	500	785	981	-	6,67	G3/8	10	20,0	**P1V-P023F00007**

Tel: +45 63 12 83 00 | Email: ps@hymatik.com | www.hymatik.com | Hvidkaervej 27a, DK-5250 Odense SV, Denmark

Note! All technical data is based on a working pressure of 5 bar.



Data for reversible motor with gearbox, brake and flange

Max power kW	Speed at max power rpm	Torque at max power Nm	Min start torque Nm	Stall torque Nm	Brake torque Nm	Air consumption at max power l/s	Conn.	Min pipe ID mm	Weight Kg	Order code
0,110	180	5,88	8,83	12,7	14,7	4,34	G1/4	10	8,0	**P1V-P012BB0360**
0,110	90	11,8	17,7	26,5	29,4	4,34	G1/4	10	8,0	**P1V-P012BB0180**
0,110	60	17,7	26,5	39,2	44,1	4,34	G1/4	10	8,0	**P1V-P012BB0120**
0,110	45	23,5	35,3	53,0	58,8	4,34	G1/4	10	8,0	**P1V-P012BB0090**
0,110	30	35,3	53,0	78,5	88,3	4,34	G1/4	10	10,0	**P1V-P012BB0060**
0,110	22,5	47,1	70,6	106	118	4,34	G1/4	10	10,0	**P1V-P012BB0050**
0,110	18	58,8	79,4	132	147	4,34	G1/4	10	10,0	**P1V-P012BB0040**
0,110	15	70,6	106	157	177	4,34	G1/4	10	10,0	**P1V-P012BB0030**
0,110	11,2	93,2	139	206	235	4,34	G1/4	10	10,0	**P1V-P012BB0022**
0,103	9	118	175	250	283	4,34	G1/4	10	11,7	**P1V-P012BB0018**
0,103	7,5	137	206	300	339	4,34	G1/4	10	13,0	**P1V-P012BB0015**
0,103	5,6	176	261	373	453	4,34	G1/4	10	13,0	**P1V-P012BB0012**
0,103	4,5	233	350	500	567	4,34	G1/4	10	13,0	**P1V-P012BB0009**
0,199	150	12,7	20,6	26,5	29,4	6,67	G3/8	10	13,5	**P1V-P023BB0300**
0,199	75	26,5	41,2	53,0	58,8	6,67	G3/8	10	13,5	**P1V-P023BB0150**
0,199	50	39,2	61,8	79,4	88,3	6,67	G3/8	10	13,5	**P1V-P023BB0100**
0,199	37,5	53,0	82,4	106	118	6,67	G3/8	10	13,5	**P1V-P023BB0075**
0,199	25	78,5	124	159	177	6,67	G3/8	10	17,0	**P1V-P023BB0050**
0,199	18,7	106	165	212	235	6,67	G3/8	10	17,0	**P1V-P023BB0038**
0,199	15	132	206	265	294	6,67	G3/8	10	17,0	**P1V-P023BB0030**
0,199	12,5	157	247	318	353	6,67	G3/8	10	17,0	**P1V-P023BB0025**
0,199	9,3	203	314	402	471	6,67	G3/8	10	17,0	**P1V-P023BB0018**
0,191	7,5	250	392	490	549	6,67	G3/8	10	24,5	**P1V-P023BB0015**
0,191	6,2	300	471	598	657	6,67	G3/8	10	24,5	**P1V-P023BB0012**
0,191	4,6	396	628	785	873	6,67	G3/8	10	24,5	**P1V-P023BB0009**
0,191	3,7	500	785	981	1100	6,67	G3/8	10	24,5	**P1V-P023BB0007**

Tel: +45 63 12 83 00 | Email: ps@hymatik.com | www.hymatik.com | Hvidkaervej 27a, DK-5250 Odense SV, Denmark

Note! All technical data is based on a working pressure of 5 bar.



Data for reversible motor with gearbox, brake and foot

Max power kW	Speed at max power rpm	Torque at max power Nm	Min start torque Nm	Stall torque Nm	Brake torque Nm	Air consumption at max power l/s	Conn.	Min pipe ID mm	Weight Kg	Order code
0,110	180	5,88	8,83	12,7	14,7	4,34	G1/4	10	8,5	**P1V-P012FB0360**
0,110	90	11,8	17,7	26,5	29,4	4,34	G1/4	10	8,5	**P1V-P012FB0180**
0,110	60	17,7	26,5	39,2	44,1	4,34	G1/4	10	8,5	**P1V-P012FB0120**
0,110	45	23,5	35,3	53,0	58,8	4,34	G1/4	10	8,5	**P1V-P012FB0090**
0,110	30	35,3	53,0	78,5	88,3	4,34	G1/4	10	10,5	**P1V-P012FB0060**
0,110	22,5	47,1	70,6	106	118	4,34	G1/4	10	10,5	**P1V-P012FB0050**
0,110	18	58,8	79,4	132	147	4,34	G1/4	10	10,5	**P1V-P012FB0040**
0,110	15	70,6	106	157	177	4,34	G1/4	10	10,5	**P1V-P012FB0030**
0,110	11,2	93,2	139	206	235	4,34	G1/4	10	10,5	**P1V-P012FB0022**
0,103	9	118	175	250	283	4,34	G1/4	10	13,5	**P1V-P012FB0018**
0,103	7,5	137	206	300	339	4,34	G1/4	10	13,5	**P1V-P012FB0015**
0,103	5,6	176	261	373	453	4,34	G1/4	10	13,5	**P1V-P012FB0012**
0,103	4,5	233	350	500	567	4,34	G1/4	10	13,5	**P1V-P012FB0009**
0,199	150	12,7	20,6	26,5	29,4	6,67	G3/8	10	13,0	**P1V-P023FB0300**
0,199	75	26,5	41,2	53,0	58,8	6,67	G3/8	10	13,0	**P1V-P023FB0150**
0,199	50	39,2	61,8	79,4	88,3	6,67	G3/8	10	13,0	**P1V-P023FB0100**
0,199	37,5	53,0	82,4	106	118	6,67	G3/8	10	13,0	**P1V-P023FB0075**
0,199	25	78,5	124	159	177	6,67	G3/8	10	16,5	**P1V-P023FB0050**
0,199	18,7	106	165	212	235	6,67	G3/8	10	16,5	**P1V-P023FB0038**
0,199	15	132	206	265	294	6,67	G3/8	10	16,5	**P1V-P023FB0030**
0,199	12,5	157	247	318	353	6,67	G3/8	10	16,5	**P1V-P023FB0025**
0,199	9,3	203	314	402	471	6,67	G3/8	10	16,5	**P1V-P023FB0018**
0,191	7,5	250	392	490	549	6,67	G3/8	10	24,0	**P1V-P023FB0015**
0,191	6,2	300	471	598	657	6,67	G3/8	10	24,0	**P1V-P023FB0012**
0,191	4,6	396	628	785	873	6,67	G3/8	10	24,0	**P1V-P023FB0009**
0,191	3,7	500	785	981	1100	6,67	G3/8	10	24,0	**P1V-P023FB0007**

Tel: +45 63 12 83 00 | Email: ps@hymatik.com | www.hymatik.com | Hvidkaervej 27a, DK-5250 Odense SV, Denmark

Tel: +45 63 12 83 00 | Email: ps@hymatik.com | www.hymatik.com | Hvidkaervej 27a, DK-5250 Odense SV, Denmark











Rotary Actuators

Tel: +45 63 12 83 00 | Email: ps@hymatik.com | www.hymatik.com | Hvidkaervej 27a, DK-5250 Odense SV, Denmark

Rotary actuators are an efficient and easy way to generate torque from compressed air, in a very compact size. They are ideal for the compact applications in a wide range of industries such as, packaging, process, electronics etc.



- Compact design
- Durable construction
- Long maintenance-free life
- High output torque/weight ratio
- Wide choice of torques available (up to 247 Nm)
- Range of mounting option, hydro-cushioning and position sensors

Operating information

Working pressure: Max 10 bar
Permissible fluid: Filtered (<5µ) with or without lubrication
Standard working temperature:
PRN/PRO 3 to 20 -5°C to +80°C
Other models -5°C to +60°C

Prelubricated, further lubrication is not normally necessary. If additional lubrication is introduced it must be continued.

For more information see www.parker.com/euro_pneumatic

PRN miniature (fixed oscillating angle)

	Torque at 6 bar (N.m)	Oscillating reference point 45°	90°	Oscillating angle 90°	180°	270°
Single vane						
PRNA1S	0,16		X	**PRNA1S-90-90**	**PRNA1S-180-90**	
PRNA3S	0,38		X	**PRNA3S-90-90**	**PRNA3S-180-90**	
PRNA10S	1,20		X	**PRNA10S-90-90**	**PRNA10S-180-90**	
PRNA20S	2,10		X	**PRNA20S-90-90**	**PRNA20S-180-90**	
PRN30SE	4,10	X		**PRN30SE-90-45**	**PRN30SE-180-45**	**PRN30SE-270-45**
Double vane						
PRNA3D	0,65			**PRNA3D-90-45**		
PRNA10D	2,54			**PRNA10D-90-45**		
PRNA20D	4,70			**PRNA20D-90-45**		
PRN30DE	9,50			**PRN30DE-90-45**		

PRO (adjustable oscillating angle)

Torque at 6bar (N.m)	Oscillating angle	Order code	Torque at 6bar (N.m)	Oscillating angle	Order code
Single vane		**Double vane**			
0,38	30 to 180°	**PROA3S-0-90**	0,65	30 to 90°	**PROA3D-0-45**
1,20	30 to 180°	**PROA10S-0-90**	2,54	30 to 90°	**PROA10D-0-45**
2,10	30 to 180°	**PROA20S-0-90**	4,70	30 to 90°	**PROA20D-0-45**
4,10	30 to 270°	**PRO30SE-0-45**	9,50	30 to 90°	**PRO30DE-0-45**

PRN high torque range (fixed oscillating angle)

	Torque at 6 bar (N.m)	Oscillating angle 90°	180°	270°
Single vane				
PRN50SE	5,9	**PRN50SE-90-45**	**PRN50SE-180-45**	**PRN50SE-270-45**
PRN150SE	18,0	**PRN150SE-90-45**	**PRN150SE-180-45**	**PRN150SE-270-45**
PRN300SE	34,5	**PRN300SE-90-45**	**PRN300SE-180-45**	**PRN300SE-270-45**
PRN800SE	123,0	**PRN800SE-90-45**	**PRN800SE-180-45**	**PRN800SE-270-45**
Double vane (oscillating angle 45°)				
PRN50DE	12,8	**PRN50DE-90-45**		
PRN150DE	41,5	**PRN150DE-90-45**		
PRN300DE	83,0	**PRN300DE-90-45**		
PRN800DE	247,0	**PRN800DE-90-45**		

Tel: +45 63 12 83 00 | Email: ps@hymatik.com | www.hymatik.com | Hvidkaervej 27a, DK-5250 Odense SV, Denmark

Design Variants

PRO and miniature PRN ranges

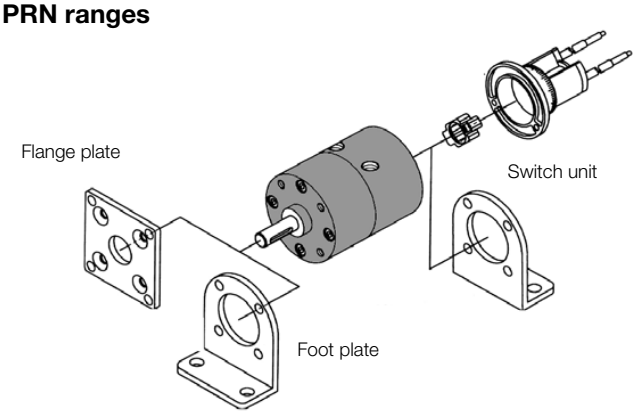

PRN high torque range

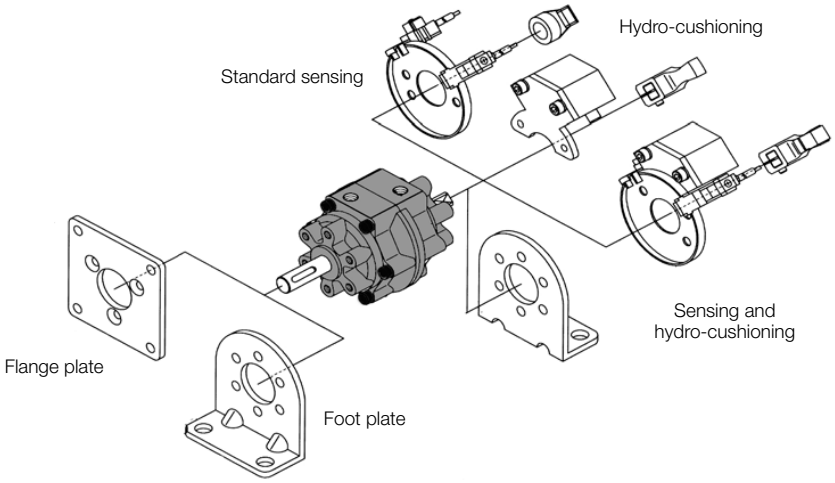

Hydro-cushion for PRN050 to PRN800 rotary actuators

Rotary actuator	Hydro-cushion	Claw for hydro-cushion - Oscillating angle		
		90°	180°	270°
PRN50S	**CRN50**	**CRN50-90-45-T**	**CRN50-180-45-T**	**CRN50-270-45-T**
PRN150S	**CRN150**	**CRN150-90-45-T**	**CRN150-180-45-T**	**CRN150-270-45-T**
PRN300S	**CRN300**	**CRN300-90-45-T**	**CRN300-180-45-T**	**CRN300-270-45-T**
PRN50D	**CRN50**	**CRN50-90-45-T**		
PRN150D	**CRN150**	**CRN150-90-45-T**		
PRN300D	**CRN300**	**CRN300-90-45-T**		

Tel: +45 63 12 83 00 | Email: ps@hymatik.com | www.hymatik.com | Hvidkaervej 27a, DK-5250 Odense SV, Denmark

Vane actuators provide the maximum amount of output torque from the smallest possible envelope size. They convert pneumatic pressure into rotary motion for a wide variety of industrial applications.

Two basic styles are available. Single vane models with a maximum rotation of 280°, while the double vane units produce twice the torque output from identical envelope dimensions and have a maximum rotation of 100°.



- Double acting actuators
- Single or double vane
- Compact smooth design
- Uniform torque in both directions
- Angle adjustment and sensors available.

Operating information

Type		Double acting actuation
Standard rotation (tolerance ±1°)	Single vane	0 to 275°, size 10 to 11 0 to 280°, size 22 to 23
	Double vane	0 to 95°, size 10 to 11 0 to 100°, size 22 to 23
Temperature		-10°C to +80°C
Air supply		Lubricated or non-lubricated
Pressure range		2 to 10 bar max

Basic Unit

Size	Max.rotation	Type	Shaft	Order code.
10	275°	Single	Not through rod	**6V5100010F-275**
	95°	Double		**6V5100010F-095**
11	275°	Single		**6V5200010F-275**
	95°	Double		**6V5200010F-095**
22	280°	Single	Through rod	**6V1300030F-280**
	100°	Double		**6V1300030F-100**
33	280°	Single		**6V2400030F-280**
	100°	Double		**6V2400030F-100**

Angle adjustment and sensor kits

Size	Options	Order code.
22	Angle adjustment kit	**6V03570**
	Angle adjustment kit with sensors PNP	**6V03575**
	Angle adjustment kit with sensors NPN	**6V03576**
33	Angle adjustment Kit	**6V04570**
	Angle adjustment kit with sensors PNP	**6V04575**
	Angle adjustment kit with sensors NPN	**6V04576**

Complete with angle adjustment and sensors

Size	Max.rotation	Type	Shaft	Order code.
22	220°	Single	Angle adjustment kit	**6V1357630F-220**
	100°	Double		**6V1357730F-100**
	220°	Single	As above + PNP Sensors + plug	**6V1357635F-220**
	100°	Double		**6V1357735F-100**
	220°	Single	As above + NPN Sensors + plug	**6V1357636F-220**
	100°	Double		**6V1357736F-100**
33	220°	Single	Angle adjustment kit	**6V2457630F-220**
	100°	Double		**6V2457730F-100**
	220°	Single	As above + PNP Sensors + plug	**6V2457635F-220**
	100°	Double		**6V2457735F-100**
	220°	Single	As above + NPN Sensors + plug	**6V2457636F-220**
	100°	Double		**6V2457736F-100**

Tel: +45 63 12 83 00 | Email: ps@hymatik.com | www.hymatik.com | Hvidkaervej 27a, DK-5250 Odense SV, Denmark

The RA is a double-acting rotary actuator of very compact design. It has a high torque and small installation dimensions.
The actuator has double pistons, which transmits the turning moment to the output shaft. The toothed piston rods act on the output shaft in a rack-and-pinion type arrangement. Each piston and toothed rod is of integral construction.
The rack-and-pinion type arrangement gives an even turning moment throughout the rotation movement.



- 5 unit sizes
- Torque from 20 to 200 Nm
- Turning angles of 90° or 180°
- Keyway output shaft
- Direct Namur valve connection

Operating information

Working medium:	dry, filtered compressed air
Working pressure:	Max, 10 bar
Working temperature:	-20°C to +80°C

Prelubricated, further lubrication is not normally necessary.
If additional lubrication is introduced it has to be continued.

Ordering information for RA

Angle	Order code
90°	**RA2-90**
180°	**RA2-180**
90°	**RA4-90**
180°	**RA4-180**
90°	**RA8-90**
180°	**RA8-180**
90°	**RA12-90**
180°	**RA12-180**
90°	**RA20-90**
180°	**RA20-180**

Material specification

Cylinder block / end covers	Anodised aluminium, natural/black
Pistons	Aluminium
Relief surface bars	Stainless steel
Shaft	Zinc-plated steel
End cover screws	Zinc-plated steel
Seals	Nitrile rubber, NRB
Piston bearings	POM
Shaft bearings	Polyethene MOS2

Tel: +45 63 12 83 00 | Email: ps@hymatik.com | www.hymatik.com | Hvidkaervej 27a, DK-5250 Odense SV, Denmark

Transforms the rectilinear motion of two single acting opposite cylinders into rotary motion via a rack and pinion drive contained within the cylinder body.



- VRA version (Ø32 to Ø80mm)
- VRA standard version (Ø32 to Ø125mm) for corrosive environments
- Rotation angles of 96°, 186° or 366°
- Optional magnetic version
- Several options are available; rotative angle adjustable stop, male shaft or female shaft (through)

Operating information

Working pressure:	Max, 10 bar
Standard working temperature:	-10°C to +60°C

Prelubricated, further lubrication is not normally necessary.
If additional lubrication is introduced it has to be continued.

VRA - Magnetic, Female shaft, No end adjustment

Bore	Rotation Angle (°)	Order code
32	96	**VRAM032-96FNN**
32	186	**VRAM032-186FNN**
32	366	**VRAM032-366FNN**
40	96	**VRAM040-96FNN**
40	186	**VRAM040-186FNN**
40	366	**VRAM040-366FNN**
50	96	**VRAM050-96FNN**
50	186	**VRAM050-186FNN**
50	366	**VRAM050-366FNN**
63	96	**VRAM063-96FNN**
63	186	**VRAM063-186FNN**
63	366	**VRAM063-366FNN**
80	96	**VRAM080-96FNN**
80	186	**VRAM080-186FNN**
80	366	**VRAM080-366FNN**

VRS - Magnetic, Female shaft, No end adjustment

Bore	Rotation Angle (°)	Order code
32	96	**VRSM032-96FNN**
32	186	**VRSM032-186FNN**
32	366	**VRSM032-366FNN**
40	96	**VRSM040-96FNN**
40	186	**VRSM040-186FNN**
40	366	**VRSM040-366FNN**
50	96	**VRSM050-96FNN**
50	186	**VRSM050-186FNN**
50	366	**VRSM050-366FNN**
63	96	**VRSM063-96FNN**
63	186	**VRSM063-186FNN**
63	366	**VRSM063-366FNN**
80	96	**VRSM080-96FNN**
80	186	**VRSM080-186FNN**
80	366	**VRSM080-366FNN**
100	96	**VRSM100-96FNN**
100	186	**VRSM100-186FNN**
100	366	**VRSM100-366FNN**
125	96	**VRSM125-96FNN**
125	186	**VRSM125-186FNN**
125	366	**VRSM125-366FNN**

For more options consult techinical catalogue

Tel: +45 63 12 83 00 | Email: ps@hymatik.com | www.hymatik.com | Hvidkaervej 27a, DK-5250 Odense SV, Denmark

Dimensions (mm)

Cylinder bores Ø 32 to 80mm

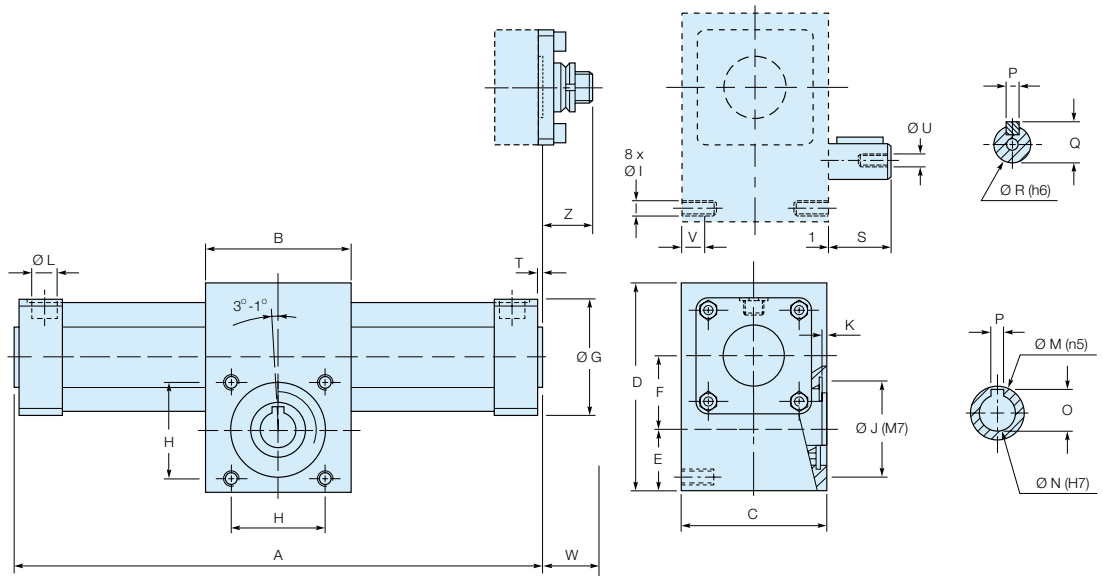

The location of the shaft key is indicated when the pistons are on the left.
First rotation as indicated (clockwise).

Ω : Rotative angle 96°, 186° or 360°

Ø	A*	B	C	D	E	F	G	H	I	J	K	L
32	128 + 0.523 Ω	50	50	72	25.0	24.0	45	35	M6	35	2.0	G1/8"
40	163 + 0.6981 Ω	65	65	95	32.5	29.5	52	47	M8	47	3.0	G1/4"
50	163 + 0.6981 Ω	65	65	95	32.5	29.5	65	47	M8	47	3.0	G1/4"
63	209 + 0.9424 Ω	95	95	126	40.0	38.0	75	62	M10	62	3.5	G3/8"
80	209 + 0.9424 Ω	95	95	126	40.0	38.0	95	62	M10	62	3.5	G3/8"

Ø	M	N	O	P	Q	R	S	T	U	V	W*	Z
32	17	10	11.7	4	13.5	12	20	2	M4 x 10	10	22	31
40	25	15	17.2	5	18.0	16	30	3	M5 x 15	12	24	35
50	25	15	17.2	5	18.0	16	30	3	M5 x 15	12	29	35
63	35	24	27.2	8	27.0	24	40	3	M8 x 20	15	32	32
80	35	24	27.2	8	27.0	24	40	3	M8 x 20	15	32	32

* Add W to A for the magnetic version (magnet on right hand side as standard).

Tel: +45 63 12 83 00 | Email: ps@hymatik.com | www.hymatik.com | Hvidkaervej 27a, DK-5250 Odense SV, Denmark

Dimensions (mm)

Cylinder bores Ø 100 to 125mm

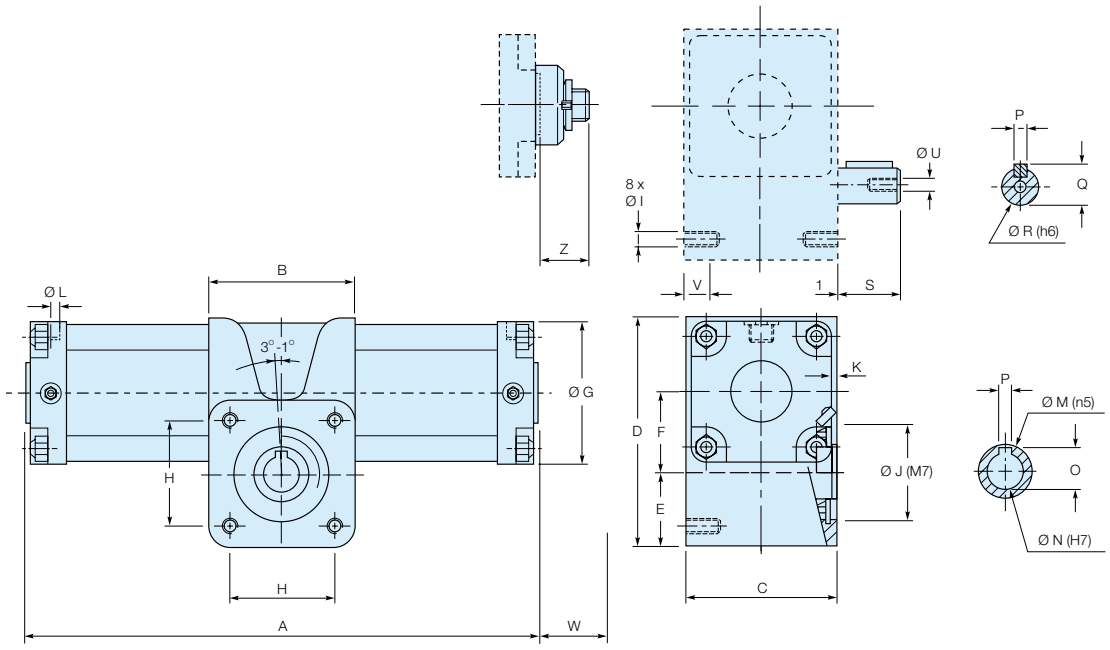

The location of the shaft key is indicated when the pistons are on the left.
First rotation as indicated (clockwise).

Ω : Rotative angle 96°, 186° or 360°

Ø	A*	B	C	D	E	F	G	H	I	J	K	L
100	304 + 1.309 Ω	130	142	188	64.0	53.5	115	90	M14	90	4.5	G1/2"
125	304 + 1.309 Ω	130	142	188	64.0	53.5	140	90	M14	90	4.5	G1/2"

Ø	M	N	O	P	Q	R	S	U	V	W*	Z
100	55	35	38.7	10	38.5	35	50	M12 x 20	24	4	38
125	55	35	38.7	10	38.5	35	50	M12 x 20	24	4	38

* Add W to A for the magnetic version (magnet on right hand side as standard).

Tel: +45 63 12 83 00 | Email: ps@hymatik.com | www.hymatik.com | Hvidkaervej 27a, DK-5250 Odense SV, Denmark

Material specification

	VRS	VRA
Rack	XC40 steel	XC40 steel
Floating piston	Aluminium	Aluminium
Magnet (***M version)	Magnetic elastomer	Magnetic elastomer
Piston seals	Polyurethane	Polyurethane
Rack and pinion gear seals		Silicone
Body	Anodised aluminium	Anodised aluminium
Integrated tie rods, nuts, circlips, screws	Zinc plated steel	303 stainless steel
Body	Hard anodised aluminium extrusion	Hard anodised aluminium extrusion
End caps	Anodised aluminium	Anodised aluminium
Male or female transmission shaft	XC40 steel	304 stainless steel (female)
Cushion sleeve	Brass	Brass
Clearance adjusting block (Ø 32 to 80mm)	Acetal	Acetal
Adjusting screw blanking plate		Aluminium + silicone seal

Condition of use

	Ø 32 to 80mm	Ø 100 and 125mm
Temperature range	-10°C to +60°C (14°F to 140°F)	
Pressure range (bar)	0.5 to 10 7 to 145 psi)	0.3 to 10 (4 to 145 psi)
Air condition	Filtered air 40µ, lubricated or non lubricated, dry or non dry	

Theoretical torque

Ø Bore mm	Pinion Module	ØPm	Torque (N.m) 2 bar	4 bar	6 bar	8 bar	10 bar
32	1.5	20	2.4	4.8	7.2	9.6	12
40	2	40	5.0	10.0	15.0	20.0	25
50	2	40	8.0	16.0	24.0	32.0	40
63	3	54	17.0	34.0	51.0	68.0	85
80	3	54	27.0	54.0	81.0	108.0	135
100	5	75	58.0	116.0	174.0	232.0	290
125	5	75	92.0	184.0	276.0	368.0	460

The table above shows the theoretical torque at different pressures. A maximum efficiency of 80% should be assured due to functional losses.

Technical data

Bore (mm)		32	40	50	63	80	100	125
Maximum load (N)	Axial	110	350	350	1050	1050	2500	2500
	Radial	35	220	220	900	900	2000	2000
Cushion angle (°)		50	45	45	32	32	30	30
Nominal moment of inertia (kg.m²)		0.003	0.01	0.02	0.1	0.2	0.3	0.4
Rotative angle (-1°)		96°, 186°, 366°						
Angular tolerance		0°10'	0°10'	0°10'	0°10'	0°10'	1°	1°

Tel: +45 63 12 83 00 | Email: ps@hymatik.com | www.hymatik.com | Hvidkaervej 27a, DK-5250 Odense SV, Denmark

Tel: +45 63 12 83 00 | Email: ps@hymatik.com | www.hymatik.com | Hvidkaervej 27a, DK-5250 Odense SV, Denmark











Thrust Drives

Tel: +45 63 12 83 00 | Email: ps@hymatik.com | www.hymatik.com | Hvidkaervej 27a, DK-5250 Odense SV, Denmark



9109 & SP Air Bellows

Removable and Crimped Types



Air bellows are the ideal choice for applications requiring short stroke, high thrust single acting actuators. Manufactured from fabric reinforced synthetic rubber in one, two or three convolutions according to stroke and model. They incorporate no reciprocating metal parts and so provide virtually frictionless thrust compared with conventional pneumatic cylinders. All models are single acting only. The return stroke is provided in part by the natural spring action of the bellows but more usually by the load itself. The simplicity of construction provides an extremely long, virtually maintenance-free service life even under arduous conditions. Air bellows are suitable for vibration applications i.e. device feeders at high frequency.

- **10 sizes, diameters 70 to 660 mm, Strokes from 20 to 410 mm, single, double or triple convolutions (removable type)**
- **7 sizes, diameters 82 to 288 mm, Strokes from 55 to 170 mm, single or double convolutions (crimped type)**
- **High thrust and frictionless movement**
- **Oil free**
- **Short stroke for high force application**
- **Easy to install**
- **Easy to work**
- **Single acting**
- **Use as a cylinder or an isolator**

Air bellows are the ideal choice for applications requiring short stroke, high thrust single acting actuators.

Manufactured from fabric reinforced synthetic rubber in one, two or three convolutions according to stroke and model. They incorporate no reciprocating metal parts and so provide virtually frictionless thrust compared with conventional pneumatic cylinders.

- 10 sizes, diameters 70-660 mm
- Strokes from 45 to 375 mm
- Single, double or triple convolutions
- High thrust and frictionless movement
- Maintenance free



Operating information

Working pressure:	Max 8 bar
Working temperature:	-30°C to +70°C
High temperature version	
Working temperature:	-30°C to +90°C
Operation:	Dry air

It is recommended that external mechanical stops are used to limit the stroke. The units should not achieve maximum stroke or be allowed to 'bottom out'.
Air Bellows may not be stacked, use singly only.

Air bellows are suitable for vibration applications i.e. device feeders at high frequency.

For more information see www.parker.com/euro_pneumatic

Symbol	Ø (mm)	Types inch x nb conv.	Port size	Max stroke (mm)	Order code Standard	Order code High temp	Order code With stainless steel parts
One convolution	**70**	2¾ x 1 (alu.)	G1/4	20	**9109025A**	**9109225A**	/
	110	4½ x 1 (alu.)	G3/8	45	**9109400**	**9109600**	**9109400N**
	150	6 x 1 (alu.)	G1/2	55	**9109004A**	**9109204A**	/
	150	6 x 1 (steel)	G1/2	55	**9109004**	**9109204**	**9109004N**
	200	8 x 1 (steel)	G1/2	75	**9109014**	**9109214**	**9109014N**
	250	10 x 1 (steel)	G1/2	100	**9109024**	**9109224**	**9109024N**
	300	12 x 1 (steel)	G1/2	100	**9109044**	**9109244**	**9109044N**
	370	14½ x 1 (steel)	G1/2	115	**9109064**	**9109264**	**9109064N**
	410	16 x 1 (steel)	G1/2	160	**9109026**	**9109226**	**9109026N**
	550	21½ x 1 (alu.)	G3/4	XXX	**9109027A**	**9109227A**	/
Two convolutions	**70**	2¾ x 2 (alu.)	G1/4	50	**9109009**	**9109509**	/
	110	4½ x 2 (alu.)	G3/8	80	**9109401**	**9109502**	**9109401N**
	150	6 x 2 (alu.)	G1/2	112	**9109001A**	**9109201A**	/
	150	6 x 2 (steel)	G1/2	112	**9109001**	**9109201**	**9109001N**
	200	8 x 2 (steel)	G1/2	180	**9109011**	**9109211**	**9109011N**
	250	10 x 2 (steel)	G1/2	200	**9109021**	**9109221**	**9109021N**
	300	12 x 2 (steel)	G1/2	195	**9109041**	**9109241**	**9109041N**
	370	14½ x 2 (steel)	G1/2	225	**9109061**	**9109261**	**9109061N**
	410	16 x 2 (steel)	G1/2	250	**9109171**	**9109271**	**9109171N**
	550	21½ x 2 (alu.)	G3/4	300	**9109150**	**9109250**	/
		21½ x 2 (Air bellow less end caps)			**9109153**	**9109253**	/
	660	26 x 2 (steel)	G3/4	310	**9109156**	/	/
		26 x 2 (Air bellow less end caps)			**9109159**	/	/
Three convolutions	**70**	2¾ x 3 (alu.)	G1/4	65	**9109010**	**9109510**	/
	110	4½ x 3 (alu.)	G3/8	100	**9109402**	**9109503**	**9109402N**
	150	6 x 3 (alu.)	G1/2	173	**9109007A**	**9109207A**	/
	150	6 x 3 (steel)	G1/2	173	**9109007**	**9109207**	**9109007N**
	200	8 x 3 (steel)	G1/2	225	**9109017**	**9109217**	**9109017N**
	250	10 x 3 (steel)	G1/2	300	**9109031**	**9109231**	**9109031N**
	300	12 x 3 (steel)	G1/2	330	**9109051**	**9109251**	**9109051N**
	370	14½ x 3 (steel)	G1/2	350	**9109069**	**9109269**	**9109069N**
	410	16 x 3 * (steel)	G1/2	375	**9109177**	**9109277**	**9109177N**

Tel: +45 63 12 83 00 | Email: ps@hymatik.com | www.hymatik.com | Hvidkaervej 27a, DK-5250 Odense SV, Denmark

Dimensions (mm)

Ø70 mm *(2¾")*
Aluminium end plate version

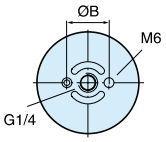

Ø110 mm *(4½")*
Aluminium end plate version

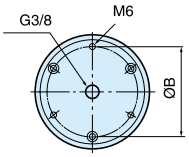

Ø550 mm *(21½")*
Steel end plate version

Ø660 mm *(26")*
Steel end plate version

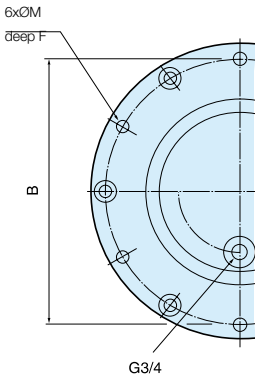

Ø150 mm *(6")*
Aluminium end plate version

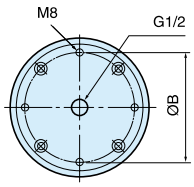

Ø200-410 mm *(8-16")*
Aluminium end plate version

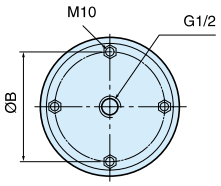

Ø	Number of convolutions	H min	H static	H max	Stroke max	ØE max	ØA	ØB	ØM	F
70	2	65	90	115	50	80	78	36	M6	9
70	3	80	110	145	65	80	78	36	M6	9
110	1	45	65	90	45	125	110	93	M6	13
110	2	65	100	145	80	125	110	93	M6	13
110	3	100	145	200	100	125	110	93	M6	13
150	1	50	80	105	55	175	155	127	M8	16
150	2	78	130	190	172	175	155	127	M8	16
150	3	102	190	275	173	175	155	127	M8	16
200	1	50	90	125	75	230	184	155,5	M10	
200	2	70	160	250	180	230	184	155,5	M10	
200	3	100	205	325	225	230	184	155,5	M10	
250	1	50	100	150	100	280	210	181	M10	
250	2	70	170	270	250	280	210	181	M10	
250	3	100	250	400	300	280	210	181	M10	
300	1	50	100	150	100	330	260	232	M10	
300	2	75	170	270	195	330	260	232	M10	
300	3	100	250	430	330	330	260	232	M10	
370	1	50	110	165	115	395	310	282,5	M10	
370	2	70	180	295	225	395	310	282,5	M10	
370	3	100	280	450	350	395	310	282,5	M10	
410	2	75	200	325	250	440	310	282,5	M10	
410	3	125	300	500	375	440	310	282,5	M10	
550	2	90	200	390	300	580	498,5	470	M10	19
660	2	90	200	400	310	700	498,5	470	M10	19

Ø70-150 mm *(2¾-6")*

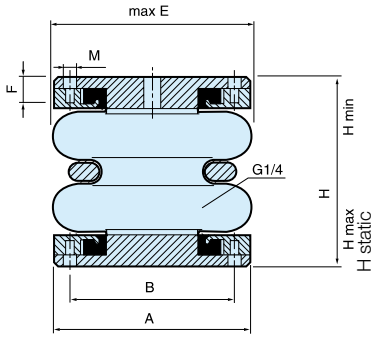

Ø200-410 mm *(8-16")*
Steel end plate version

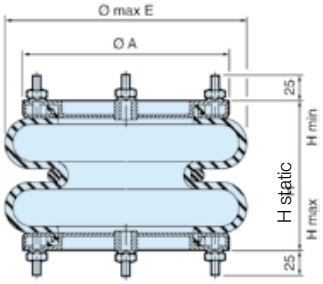

Ø550 mm *(21½")*
Aluminium end plate version

Ø660 mm *(26")*
Steel end plate version

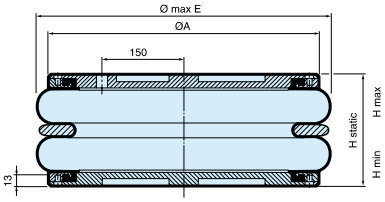

Tel: +45 63 12 83 00 | Email: ps@hymatik.com | www.hymatik.com | Hvidkaervej 27a, DK-5250 Odense SV, Denmark

Air bellows are the ideal choice for applications requiring short stroke, high thrust single acting actuators.

Manufactured from fabric reinforced synthetic rubber in one or two convolutions according to stroke and model. They incorporate no reciprocating metal parts and so provide virtually frictionless thrust compared with conventional pneumatic cylinders.



- 13 variants, diameters 150 to 420 mm
- Strokes from 45 to 170 mm
- Single or double convolutions
- High thrust and frictionless movement
- Maintenance free

Operating information

Working pressure:	Max 8 bar
Working temperature:	-40°C to +70°C
Operation:	Dry air

It is recommended that external mechanical stops are used to limit the stroke. The units should not achieve maximum stroke or be allowed to 'bottom out'.
Air Bellows may not be stacked, use singly only.

Air bellows are suitable for vibration applications i.e. device feeders at high frequency.

For more information see www.parker.com/euro_pneumatic

Single convolution

Symbol	Ø mm (inches)	Port size	Max force (N) at 1 bar (0 stroke)	Max stroke mm	Type	Order code
	150	G1/4	1250	55	SP-1B04	**KY9500**
	165	G1/4	1350	45	SP-1B05	**KY8401**
	205	G1/4	1550	90	SP-1B07	**KY9501**
	250	G3/4	2800	100	SP-1B12	**KY9502**
	350	G3/4	5050	110	SP-1B22	**KY9590**
	420	G3/4	7600	110	SP-1B34	**KY8010**

Double convolution

Symbol	Ø mm (inches)	Port size	Max force (N) at 1 bar (0 stroke)	Max stroke mm	Type	Order code
	165	G1/4	1250	110	SP-2B04	**KY9612**
	165	G1/4	1350	80	SP-2B05	**KY8011**
	170	G1/4	1750	105	SP-2B05A	**KY8012**
	215	G1/4	2200	125	SP-2B07	**KY9589**
	250	G3/4	3700	150	SP-2B12	**KY9611**
	320	G3/4	5000	170	SP-2B22	**KY9591**
	390	G3/4	8000	170	SP-2B34	**KY8007**

Tel: +45 63 12 83 00 | Email: ps@hymatik.com | www.hymatik.com | Hvidkaervej 27a, DK-5250 Odense SV, Denmark

Dimensions Series SP-1B..

Dimensions of Mounting Plates – Series SP-1B..

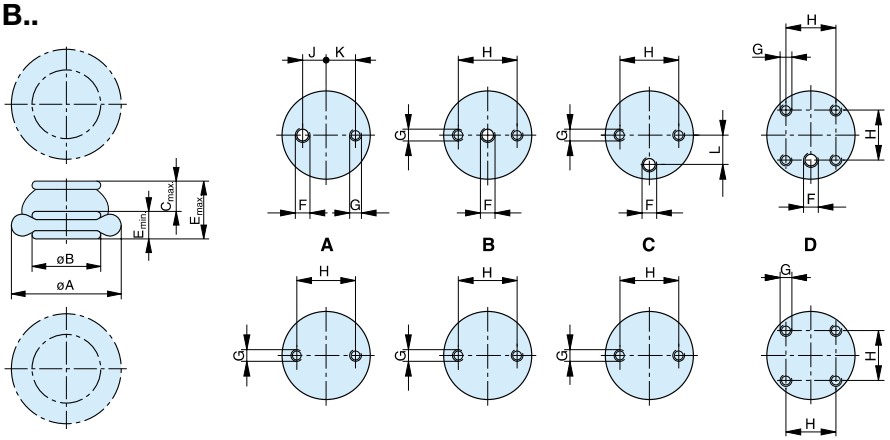

Type	Order-No.	Mounting plate	ØA at 8 bar	ØB	C_{max} **	E_{max} **	E_{min}	F	G*	H	J	K	L
SP-1B04	**KY 9500**	A	150	88	55	105	50	G1/4	M8	22	9	11	–
SP-1B05	**KY 8401**	B	165	110	45	95	50	G1/4	M8	44.5	–	–	–
SP-1B07	**KY 9501**	C	205	135	80	130	50	G1/4	M8	54	–	–	27
SP-1B12	**KY 9502**	C	250	160	100	150	50	G3/4	M8	89	–	–	38
SP-1B22	**KY 9590**	C	350	229	110	170	60	G3/4	M12	157.5	–	–	73
SP-1B34	**KY 8010**	D	420	288	110	170	60	G3/4	M8	158.8	–	–	–

*15 deep
**These dimensions depend on the operating pressure: see force diagrams

Dimensions Series SP-2B..

Dimensions of Mounting Plates – Series SP-2B..

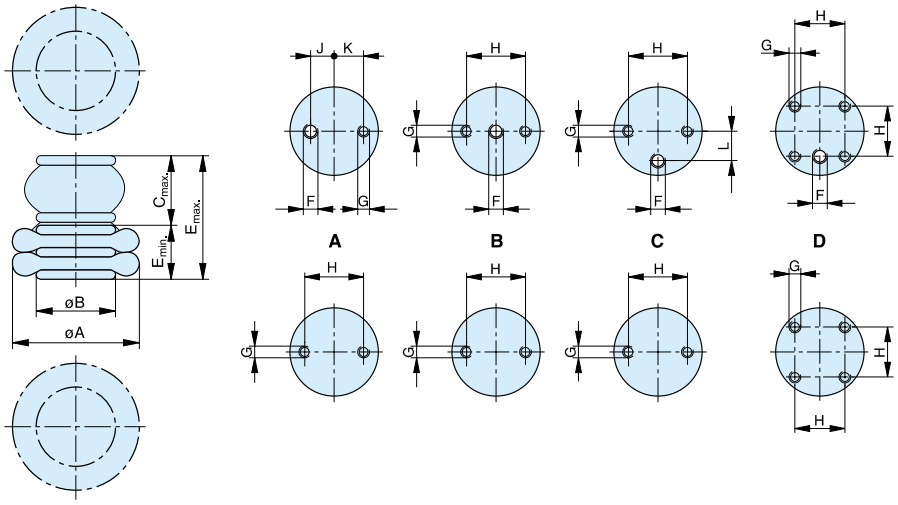

Type	Order-No.	Mounting plate	ØA at 8 bar	ØB	C_{max} **	E_{max} **	E_{min}	F	G*	H	J	K	L
SP-2B04	**KY 9612**	A	165	82	110	190	80	G1/4	M8	22	9	11	-
SP-2B05	**KY 8011**	B	165	110	80	160	80	G1/4	M8	44.5	-	-	-
SP-2B05A	**KY 8012**	B	170	110	105	185	80	G1/4	M8	44.5	-	-	-
SP-2B07	**KY 9589**	C	215	135	125	220	95	G1/4	M8	54	-	-	27
SP-2B12	**KY 9611**	C	250	160	150	240	90	G3/4	M8	89	-	-	38
SP-2B22	**KY 9591**	C	320	229	170	260	90	G3/4	M12	157.5	-	-	73
SP-2B34	**KY 8007**	D	390	288	170	260	90	G3/4	M8	158.8	-	-	-

*15 deep
**These dimensions depend on the operating pressure: see force diagrams

Tel: +45 63 12 83 00 | Email: ps@hymatik.com | www.hymatik.com | Hvidkaervej 27a, DK-5250 Odense SV, Denmark

The thrust cylinders are linear actuators, designed for a high force to size ratio. This makes the cylinder ideal to use for clamping, riveting, punching and similar applications where a high force is required.



- Thrust cylinders provide large forces
- Compact dimensions
- C0D, diaphragm type
- C0P, piston type
- Available in single and double acting versions

Operating information

Working pressure: Max 8 bar
Working temperature: -20°C to +70°C

Stainless steel piston rod
Piston rod according to ISO 4395

Compressed air cylinders, types C0D and C0P should not be used in vertical applications without external stop.

For more information see www.parker.com/euro_pneumatic

C0D - Double acting

Force at 6 bar, N	Port size	Stroke mm	Order code
3000	G1/4	40	**C0D300-40**
6000	G1/4	50	**C0D600-50**
12000	G1/2	50	**C0D1200-50**
25000	G1/2	60	**C0P2500-60**
25000	G1/2	80	**C0P2500-80**

C0P - Single acting

Force at 6 bar, N	Spring N force Max N	Spring N force Min N	Port size	Stroke mm	Order code
1600	314	128	G1/4	50	**C0P160-50S**
1600	314	128	G1/4	80	**C0P160-80S**
3000	314	128	G1/4	50	**C0P300-50S**
3000	314	128	G1/4	80	**C0P300-80S**
3000	294	98	G1/4	40	**C0D300-40S**
6000	638	98	G1/4	50	**C0D600-50S**
12000	981	235	G1/2	50	**C0D1200-50S**
25000	2700	883	G1/2	60	**C0P2500-60S**
25000	2700	883	G1/2	100	**C0P2500-100S**

The spring forces in single acting cylinders are sufficient to return the piston rod without load

Accessories

Neck mounting nut

Lock nut thread	For cylinder	Order code
M24x2	C0D300	**9141100000**
M36x3	C0D600/1200	**9141100100**
M48x3	C0P2500	**9141100200**
M24x3	C0P160/300	**9141100300**

Piston rod nut (one nut is included)

Piston rod nut thread	For cylinder	Order code
M12	C0P160/300 and C0D300	**0266211200**
M16	C0D600	**0266211400**
M20	C0D1200	**0266211600**
M24	C0P2500	**0266211800**

Tel: +45 63 12 83 00 | Email: ps@hymatik.com | www.hymatik.com | Hvidkaervej 27a, DK-5250 Odense SV, Denmark

Dimensions (mm), piston type

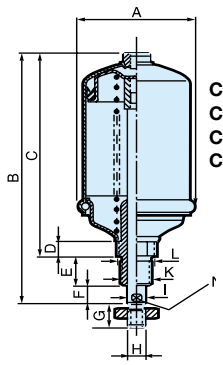

C0P160-50S
C0P160-80S
C0P300-50S
C0P300-80S

Single-acting

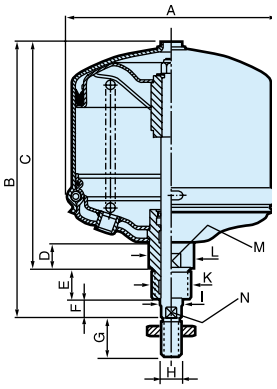

C0P2500-60S
C0P2500-100S

Single-acting

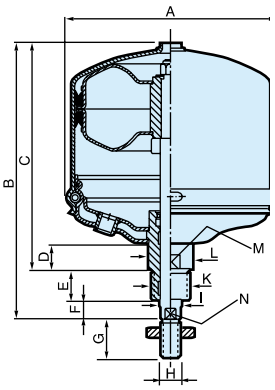

C0P2500-60
C0P2500-80

Double-acting

Type	Connection thread	A	B	C	D	E	F	G	H	I Ø	K	L Ø	M	N
C0P160-50S	G1/4	66	192	151	18	30	11	24	M12x1,75	14	M24x3	30	30	12
C0P160-80S	G1/4	66	222	181	18	30	11	24	M12x1,75	14	M24x3	30	30	12
C0P300-50S	G1/4	93	192	151	18	30	11	24	M12x1,75	14	M24x3	30	30	12
C0P300-80S	G1/4	93	222	181	18	30	11	24	M12x1,75	14	M24x3	30	30	12
C0P2500-60S	G1/2	268	345	285	33	40	20	48	M24x3	28	M48x3	56	50	25
C0P2500-100S	G1/2	268	385	325	33	40	20	48	M24x3	28	M48x3	56	50	25
C0P2500-60	G1/2	268	345	285	33	40	20	48	M24x3	28	M48x3	56	50	25
C0P2500-80	G1/2	268	385	325	33	40	20	48	M24x3	28	M48x3	56	50	25

Dimensions (mm), diaphragm type

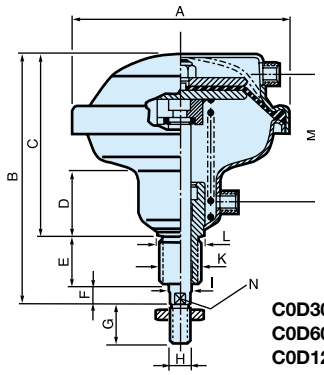

C0D300-40S
C0D600-50S
C0D1200-50S

Single-acting

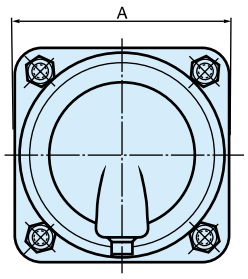

C0D300-40S **C0D300-40**
C0D600-50S **C0D600-50**
C0D1200-50S **C0D1200-50**

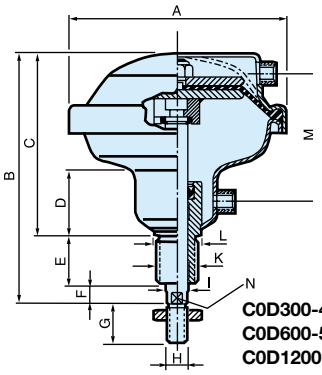

C0D300-40
C0D600-50
C0D1200-50

Double-acting

Type	Connection thread	A	B	C	D	E	F	G	H	I Ø	K	L Ø	M	N
C0D300-40S	G1/4	150	183	131	48	38	14	24	M12x1,75	16	M24x2	30	90	13
C0D300-40	G1/4	150	183	131	48	38	14	24	M12x1,75	16	M24x2	30	90	13
C0D600-50S	G1/4	195	212	154	55	38	20	32	M16x2	20	M36x3	43	107	17
C0D600-50	G1/4	195	212	154	55	38	20	32	M16x2	20	M36x3	43	107	17
C0D1200-50S	G1/2	261	243	178	58	45	20	40	M20x2,5	25	M36x3	43	117	22
C0D1200-50	G1/2	261	243	178	58	45	20	40	M20x2,5	25	M36x3	43	117	22

Tel: +45 63 12 83 00 | Email: ps@hymatik.com | www.hymatik.com | Hvidkaervej 27a, DK-5250 Odense SV, Denmark

Press stand for thrust cylinders

A simple press for efficient mounting and pressing can easily be built by screwing the thrust cylinders into the threaded holes in the very stable and strong steel press stand. The stand is available in two versions with different fastening threads for the cylinders.

The top plate has two different threads, and can be rotated through 180 degrees to present the correct thread for nose fitting of the cylinders.

The sub-base is fitted with a T-track for easy mounting of accessories. It also has two through holes for simple and secure fitting to a work bench.



NOTE! Remember that an approved two-handed press control must be used with the cylinders and the press stand to prevent crush injuries.
We recommend the use of our type PXP two-handed press control. It is available in a number of versions, and is simple, ergonomic and safe to incorporate in the press stand. It meets the requirements of safety standards EN574 and EN954-1.

For more information, see our website:
www.parker.com/euro_pneumatic

Description	Threads A/B	Weight kg	Order No.
Press stand for C0P160 / C0P300 / C0D300	M24x2/M24x3	24	**C0P-C0D-P01**
Press stand for C0D600 / C0D1200 / C0P2500	M36x3/M48x3	24	**C0P-C0D-P02**

Dimensions

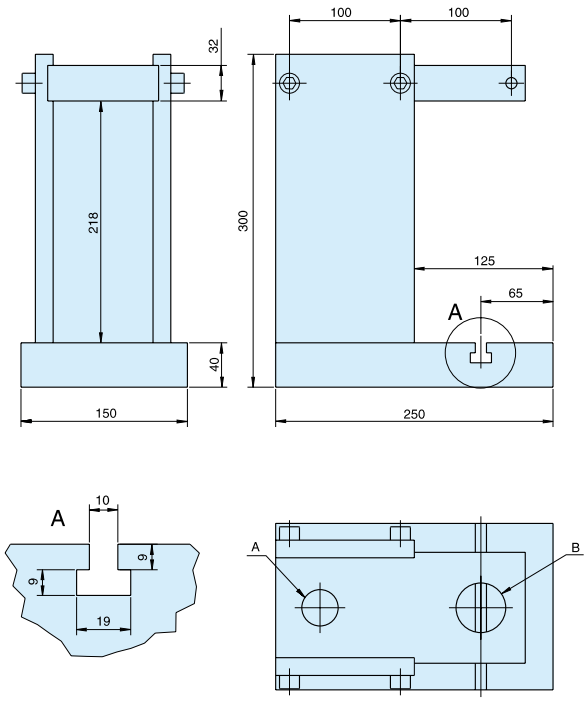

Clamp cylinders are single acting pneumatic cylinders with built-in oleo-pneumatic intensifiers They can be used to solve most clamping, tightening etc problems.

- Single acting cylinders with built-in hydro-pneumatic intensifier
- Compact size with large clamping forces up to 2700 daN (depending on air pressure)
- Operated using a compressed air supply, no special installation required
- Easy adjustment through a fully threaded body
- Simple and rapid installation



Operating information

Working pressure: except VBH603 and VBH606 :	Max 9bar Max 7bar
Permissible fluid:	Filtered (40µ) with or without lubrication
Standard working temperature:	+5°C to +50°C

Hydraulic clamps

Order code	Max.stroke (mm)	Ø external (mm)	Force at 6bar (daN)
VB363C	3	36	240
VB366C	6	36	240
VB369C	9	36	240
VB483C	3	48	530
VB486C	6	48	530
VB489C	9	48	530
VB4812C	12	48	530
VBH483C	3	48	1060
VB606C	6	60	1140
VB609C	9	60	1140
VB6012C	12	60	1140
VBH603C	3	60	1800
VBH606C	6	60	1800

Maintenance

Seal kit for	VB Ø36	VB Ø48	VBH Ø48	VB Ø60	VBH Ø60
Order code	**JJVB36**	**JJVB48**	**JJVBH48**	**JJVB60**	**JJVBH60**

Oil container for all types of hydraulic clamp cylinders (250ml capacity) : Order code BH680VB

Hydraulic clamp mountings

Mounting for VB	Mounting block	Rounded end	V groove end
Ø36	**FVA36-1**	**BVA36-16**	**BVA36-17**
Ø48	**FVA48-1**	**BVA48-16**	**BVA48-17**
Ø60	**FVA60-1**	**BVA60-16**	**BVA60-17**



Mounting block



Rounded clamp piston end



V groove clamp piston end

Dimensions (mm)

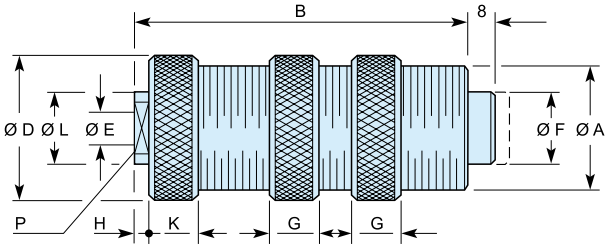

Model No	ØA	B	ØD	ØE	ØF	G	H	K	ØL	P
VB363C	M36 x 1,5	98,0	42	G1/8	22	12	4	13	22	17
VB366C	M36 x 1,5	127,5	42	G1/8	22	12	4	13	22	17
VB369C	M36 x 1,5	185,0	42	G1/8	22	12	4	13	22	17
VB483C	M48 x 1,5	111,0	56	G1/8	32	12	4	13	22	17
VBH483C	M48 x 1,5	148,0	56	G1/8	32	12	4	13	22	17
VB486C	M48 x 1,5	148,0	56	G1/8	32	12	4	13	22	17
VB489C	M48 x 1,5	188,0	56	G1/8	32	12	4	13	22	17
VB4812C	M48 x 1,5	234,0	56	G1/8	32	12	4	13	22	17
VBH603C	M60 x 2	175,0	70	G1/4	40	14	5	17	25	22
VB606C	M60 x 2	175,0	70	G1/4	40	14	5	17	25	22
VBH606C	M60 x 2	290,0	70	G1/4	40	14	5	17	25	22
VB609C	M60 x 2	249,0	70	G1/4	40	14	5	17	25	22
VB6012C	M60 x 2	314,0	70	G1/4	40	14	5	17	25	22

Tel: +45 63 12 83 00 | Email: ps@hymatik.com | www.hymatik.com | Hvidkaervej 27a, DK-5250 Odense SV, Denmark





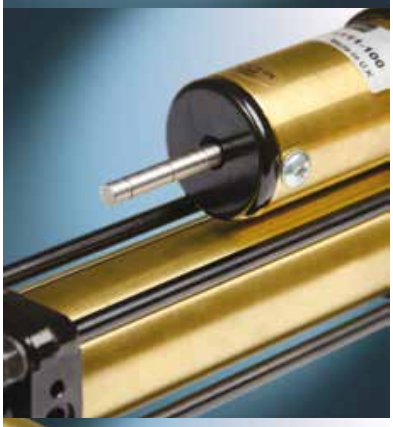



Hydrochecks

Self contained hydraulic checking units



Hydrochecks are precision built self contained hydraulic control units designed to smooth out pneumatic cylinder movements over any distance within their own stroke length, up to 450 mm.

Basic single acting models provide adjustable speed control over the full outward or inward stroke and fast return, with the facility for rapid approach to the controlled stroke by adjustment of the piston rod engaging nut.

- Gives smooth control feeds
- Strokes up to 450 mm.

Tel: +45 63 12 83 00 | Email: ps@hymatik.com | www.hymatik.com | Hvidkaervej 27a, DK-5250 Odense SV, Denmark

Tel: +45 63 12 83 00 | Email: ps@hymatik.com | www.hymatik.com | Hvidkaervej 27a, DK-5250 Odense SV, Denmark











Electromechanical Drives

Tel: +45 63 12 83 00 | Email: ps@hymatik.com | www.hymatik.com | Hvidkaervej 27a, DK-5250 Odense SV, Denmark









ORIGA SYSTEM PLUS OSPE

Electric Linear Actuators



The latest generation of high capacity actuators

The OSP-E series combines robustness, precision and high performance. The aesthetic design is easily integrated into any machine constructions by virtue of extremely adaptable mountings.

- For particularly high requirements regarding loads and forces
- For high-speed applications and highly dynamic motion profiles
- BHD with toothed belt and integrated heavy duty guide: roller guide or re-circulating ball bearing guide

Tel: +45 63 12 83 00 | Email: ps@hymatik.com | www.hymatik.com | Hvidkaervej 27a, DK-5250 Odense SV, Denmark

One complete system
- Seven actuator options
For all possible applications

Series OSP-E..BHD
Belt Actuator with integrated Guide
– Ball Bearing Guide
– Roller Guide



Series OSP-E..BV
Vertical Belt Actuator with integrated Ball Bearing Guide



Series OSP-E..B
Belt Actuator with Internal Guide



Series OSP-E..SB
Ball Screw Actuator with internal Plain Bearing Guide



Series OSP-E..ST
Trapezoidal Screw Actuator with Internal Plain Bearing Guide



Series OSP-E..SBR
Ball Screw Actuator with internal Plain Bearing Guide and Piston Rod

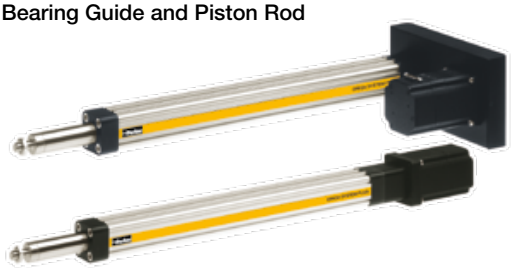

Series OSP-E..STR
Trapezoidal Screw ctuator with Internal Plain Bearing Guide and Piston Rod



Tel: +45 63 12 83 00 | Email: ps@hymatik.com | www.hymatik.com | Hvidkaervej 27a, DK-5250 Odense SV, Denmark

Belt actuator with integrated guide for heavy duty applications

The latest generation of high capacity actuators, the OSP-E..BHD series combines robustness, precision and high performance. The aesthetic design is easily integrated into any machine constructions by virtue of extremely adaptable mountings.

Belt Actuator with Integrated Guide - selective with Ball Bearing Guide or Roller Guide

Advantages:

- Accurate path and position control
- High force output
- High speed operation
- High load capacity
- Easy installation
- Low maintenance
- Ideal for multi-axis applications

Features:

- Integrated ball bearing guide or integrated roller guide
- Diverse range of multi-axis connection elements
- Diverse range of accessories and mountings
- Complete motor and control packages
- Optional integrated planetary gearbox
- Special options on request

Version with Intergrated Ball Bearing Guide

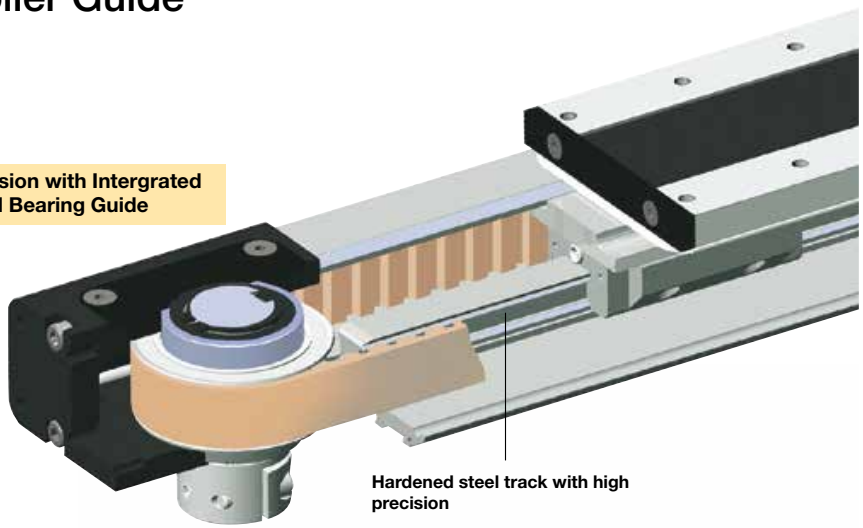

Version with Integrated Roller Guide

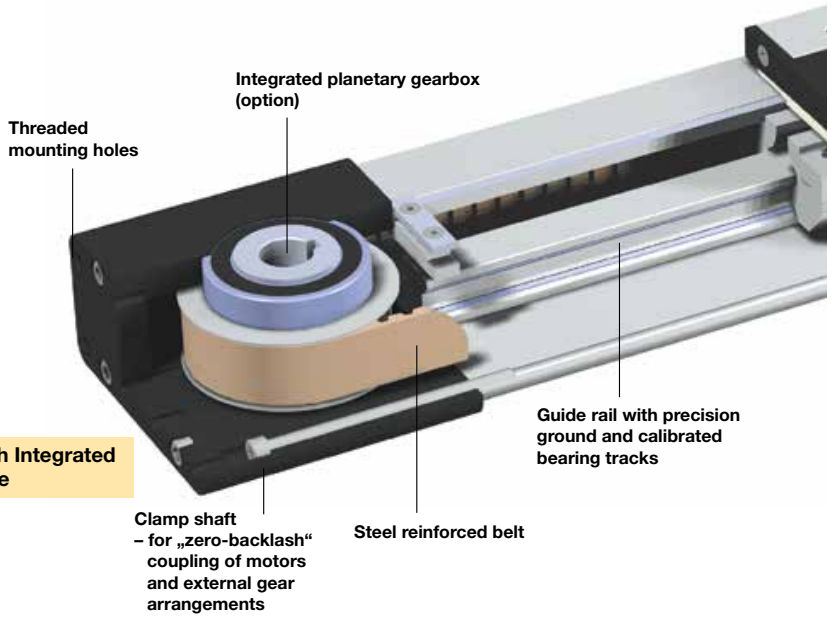

Take the easy route and load all the dimensions into your system. The file is suitable for all current CAD systems – available on CD-Rom or at www.parker-origa.com



Tel: +45 63 12 83 00 | Email: ps@hymatik.com | www.hymatik.com | Hvidkaervej 27a, DK-5250 Odense SV, Denmark

Drive Shaft Versions

Clamp Shaft



Plain Shaft



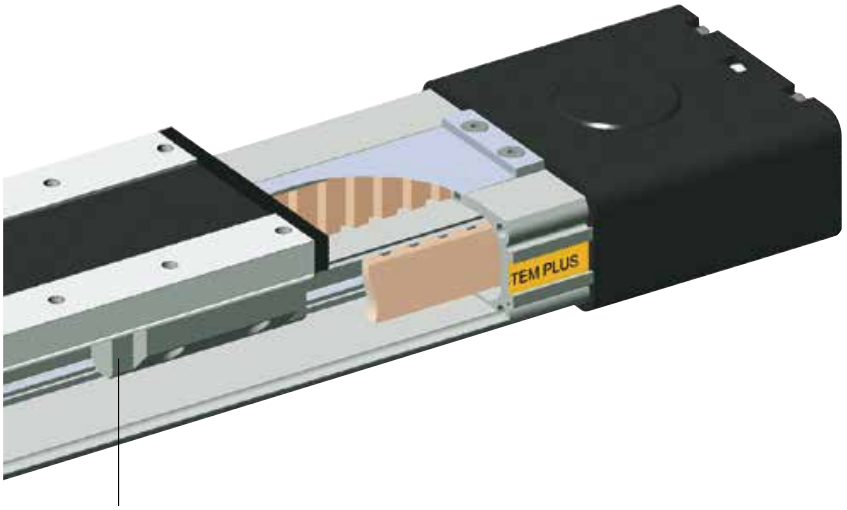

Steel runner block with integrated scraper system and grease nipples

Corrosion resistant steel sealing band

Threaded mounting holes compatible with Proline series

Carriage

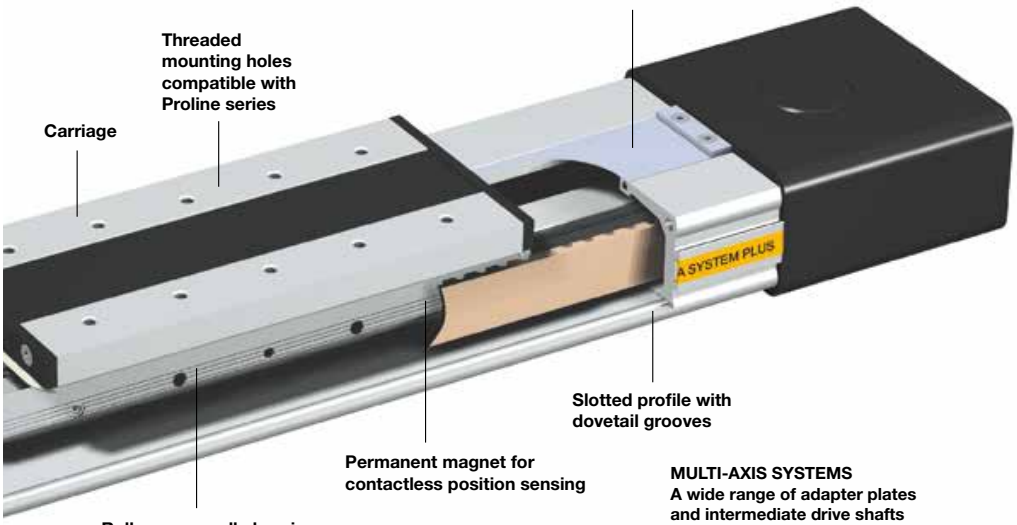

Slotted profile with dovetail grooves

Permanent magnet for contactless position sensing

Rollers on needle bearings for smooth operation up to 10 m/s.

BI-PARTING Version for perfectly synchronised bi-parting movements.

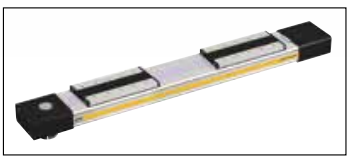

MULTI-AXIS SYSTEMS
A wide range of adapter plates and intermediate drive shafts simplify engineering and installation

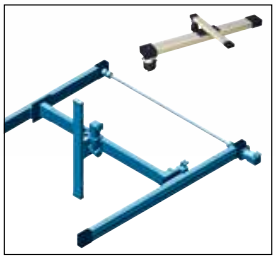

Drive Shaft OPTIONS

Clamp Shaft and Plain Shaft



Hollow Shaft with Keyway

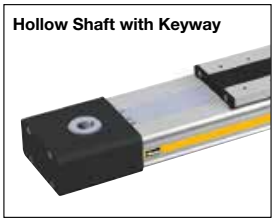

OPTION

Integrated planetary gearbox



- **Highly compact and rigid solution fully integrated in the drive cap housing**
- **Purpose designed for the BHD series**
- **Available with three standard ratios (3, 5 and 10)**
- **Very low backlash**
- **A wide range of available motor flanges**

The dovetailed mounting rails of the new linear actuator expand its function into that of a universal system carrier. Modular system components are simply clamped on

Version with Integrated Ball Bearing Guide

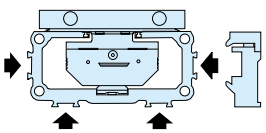

Version with Integrated Roller guide

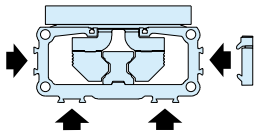

Options and Accessories

OSP-E..BHD
Belt actuator with integrated guide

STANDARD VERSIONS OSP-E..BHD

Standard carrier with integrated guide and magnets for contactless position sensing. Dovetail profile for mounting of accessories and the actuator itself.

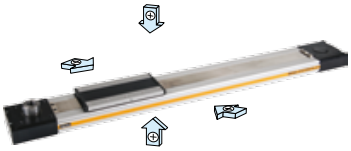

DRIVE SHAFT WITH CLAMP SHAFT



DRIVE SHAFT WITH PLAIN SHAFT



ACTUATING DIRECTION
Important in parallel operations, e.g. with intermediate drive shaft

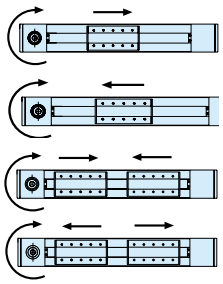

Standard

Standard – Bi-Parting Version

OPTIONS

TANDEM
For higher moment support.



BI-PARTING VERSION
For perfectly synchronised bi-parting movements.



DRIVE SHAFT WITH CLAMP SHAFT AND PLAIN SHAFT
For connections with intermediate drive shaft



HOLLOW SHAFT WITH KEYWAY
For close coupling of motors and external gears.



INTEGRATED PLANETARY GEARBOX
For compact installation and very low backlash.



ACCESSORIES

MOTOR MOUNTINGS



END CAP MOUNTING
For mounting the actuators on the end cap.



PROFILE MOUNTING
For supporting long actuators or mounting the actuators on dovetail grooves.

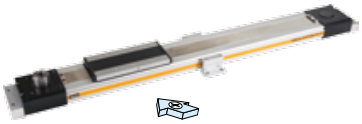

MAGNETIC SWITCHES TYPE RS AND ES
For contactless position sensing of end stop and intermediate carrier positions.

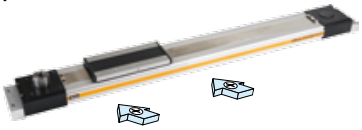

MULTI-AXIS SYSTEMS
For modular assembly of actuators up to multi-axis systems.

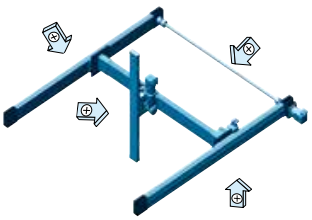

Belt Actuator with Integrated Ball Bearing Guide
Size 20 to 50
Type: OSP-E..BHD



Standard Versions:
- Belt Actuator with integrated Ball Bearing Guide
- Drive shaft with clamp shaft or plain shaft
- Choice of motor mounting side
- Dovetail profile for mounting of accessories and the actuator itself

Options:
- Tandem version for higher moments
- Bi-parting version for synchronised movements
- Integrated planetary gearbox
- Drive shaft with
  – clamp shaft and plain shaft
  – hollow shaft with keyway
- Special drive shaft versions on request

Installation Instructions
Use the threaded holes in the end cap for mounting the actuator.

Check if profile mountings are needed using the maximum allowable unsupported length graph.

At least one end cap must be secured to prevent axial sliding when profile mountings are used.

Characteristics	Description
Series	OSP-E..BHD
Mounting	See drawings
Ambient temperature range	-30 °C to +80 °C
Installation	In any position
Encapsulation class	IP 54
Material	
Slotted profile	Extruded anodized aluminium
Belt	Steel-corded polyurethane
Pulley	Aluminium
Guide	Ball bearing guide
Guide rail	Hardened steel rail with high precision, accuracy class N
Guide carrier preloaded 0.02 x C, accuracy class H	Steel carrier with integrated wiper system, grease nipples,
Steel band	Hardened, corrosion resistant steel
Screws, nuts	Zinc plated steel
Mountings	Zinc plated steel and aluminium

Weight (mass) and Inertia

Series	Weight (mass)[kg]			Inertia [x 10^{-6} kgm^2]		
	At stroke 0 m	Add per metre stroke	Moving mass	At stroke 0 m	Add per metre stroke	per kg mass
OSP-E20BHD	2.8	4	0.8	280	41	413
OSP-E25BHD	4.3	4.5	1.5	1229	227	821
OSP-E32BHD	8.8	7.8	2.6	3945	496	1459
OSP-E50BHD	26	17	7.8	25678	1738	3103
OSP-E20BHD*	4.3	4	1.5	540	41	413
OSP-E25BHD*	6.7	4.5	2.8	2353	227	821
OSP-E32BHD*	13.5	7.8	5.2	7733	496	1459
OSP-E50BHD*	40	17	15	49180	1738	3103

* Version: Tandem and Bi-parting (Option)

Maintenance
Depending on operating conditions, inspection of the actuator is recommended after 12 months or 3000 km operation.
Please refer to the operating instructions supplied with the actuator.

First service start-up
The maximum values specified in the technical data sheet for the different products must not be exceeded. Before taking the actuator as a machine into service, the user must ensure the adherence to the EC Machine Directive 2006/42/EG.

Parker Hannifin Corporation
Pneumatic Division - Europe

Tel: +45 63 12 83 00 | Email: ps@hymatik.com | www.hymatik.com | Hvidkaervej 27a, DK-5250 Odense SV, Denmark

Sizing Performance Overview Maximum Loadings

Sizing of Actuator

The following steps are recommended for selection :

1. Determination of the lever arm length l_x, l_y and l_z from m_e to the centre axis of the actuator.
2. Calculation of the load F_x or F_y to the carrier caused by m_e
   $F = m_e \cdot g$
3. Calculation of the static and dynamic force F_A which must be transmitted by the belt.
   $F_{A(horizontal)} = F_a + F_0$
   $= m_g \cdot a + M_0 \cdot 2\pi / U_{ZR}$
   $F_{A(vertical)} = F_g + F_a + F_0$
   $= m_g \cdot g + m_g \cdot a + M_0 \cdot 2\pi / U_{ZR}$
4. Calculation of all static and dynamic bending moments M_x, M_y and M_z which occur in the application
   $M = F \cdot l$
5. Selection of maximum permissible loads via Table T3.
6. Calculation and checking of the combined load, which must not be higher than 1.
7. Checking of the maximum torque that occurs at the drive shaft in Table T2.
8. Checking of the required action force F_A with the permissible load value from Table T1.

For motor sizing, the effective torque must be determined, taking into account the cycle time.

Legend

- l = distance of a mass in the x-, y- and z-direction from the guide [m]
- m_e = external moved mass [kg]
- m_{LA} = moved mass of actuator [kg]
- m_g = total moved mass ($m_e + m_{LA}$) [kg]
- $F_{x/y}$ = load excerted on the carrier in dependence of the installation position [N]
- F_A = action force [N]
- M_0 = no-load torque [Nm]
- U_{ZR} = circumference of the pulley (linear movement per revolution) [m]
- g = gravity [m/s²]
- $a_{max.}$ = maximum acceleration [m/s²]

Performance Overview (T1)

Characteristics		Unit	Description			
Series			OSP-E20BHD	OSP-E25BHD	OSP-E32BHD	OSP-E50BHD
Max. speed		[m/s]	3[1)]	5[1)]	5[1)]	5[1)]
Linear motion per revolution of drive shaft		[mm]	125	180	240	350
Max. rpm on drive shaft		[min⁻¹]	2000	1700	1250	860
Max. effective Action force F_A at speed	< 1 m/s:	[N]	550	1070	1870	3120
	1-3 m/s:	[N]	450	890	1560	2660
	> 3 m/s:	[N]	–	550	1030	1940
No-load torque		[Nm]	0.6	1.2	2.2	3.2
Max. acceleration/deceleration		[m/s²]	50	50	50	50
Repeatability		[mm/m]	±0.05	±0.05	±0.05	±0.05
Max. standard stroke length		[mm]	5760[2)]	5700[2)]	5600[2)]	5500[2)]

[1)] up to 10 m/s on request
[2)] longer strokes on request

Maximum Permissible Torque on Drive Shaft Speed / Stroke (T2)

OSP-E20BHD				OSP-E25BHD				OSP-E32BHD				OSP-E50BHD			
Speed [m/s]	Torque [Nm]	Stroke [m]	Torque [Nm]	Speed [m/s]	Torque [Nm]	Stroke [m]	Torque [Nm]	Speed [m/s]	Torque [Nm]	Stroke [m]	Torque [Nm]	Speed [m/s]	Torque [Nm]	Stroke [m]	Torque [Nm]
1	11	1	11	1	31	1	31	1	71	1	71	1	174	1	174
2	10	2	11	2	28	2	31	2	65	2	71	2	159	2	174
3	9	3	8	3	(25)	3	31	3	59	3	60	3	153	3	138
4		4	7	4	23	4	25	4	56	4	47	4	143	4	108
5		5	5	5	22	5	(21)	5	52	5	38	5	135	5	89

Important:
The maximum permissible torque on the drive shaft is the lowest value of the speed or stroke-dependent torque value.

Example above:
OSP-E25BHD, stroke 5 m, required speed 3 m/s from table T2
speed 3 m/s gives 25 Nm and stroke 5 m gives 21 Nm. Max. torque for this application is 21 Nm.

Maximum Permissible Loads (T3)

Series	Max. applied load Fy[N]	Fz[N]	Max. moments [Nm] Mx	My	Mz
OSP-E20BHD	1600	1600	21	150	150
OSP-E25BHD	2000	3000	50	500	500
OSP-E32BHD	5000	10000	120	1000	1400
OSP-E50BHD	12000	15000	180	1800	2500

Parker Hannifin Corporation
Pneumatic Division - Europe
Tel: +45 63 12 83 00 | Email: ps@hymatik.com | www.hymatik.com | Hvidkaervej 27a, DK-5250 Odense SV, Denmark

Loads, Forces and Moments

Combined loads

If the actuator is subjected to several forces, loads and moments at the same time, the maximum load is calculated with the equation shown here.
The maximum permissible loads must not be exceeded.

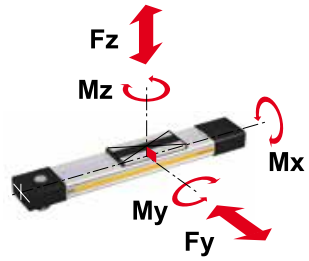

Equation of Combined Loads

$$\frac{Fy}{Fy\,(max)} + \frac{Fz}{Fz\,(max)} + \frac{Mx}{Mx\,(max)} + \frac{My}{My\,(max)} + \frac{Mz}{Mz\,(max)} \leq 1$$

The total of the loads must not exceed >1 under any circumstances.

$M = F \cdot l$ [Nm]
$M_x = M_{x\,static} + M_{x\,dynamic}$
$M_y = M_{y\,static} + M_{y\,dynamic}$
$M_z = M_{z\,static} + M_{z\,dynamic}$

The distance (l_x, l_y, l_z) for calculation of moments relates to the centre axis of the actuator. Bending moments are calculated from the centre of the actuator and F indicates actual force.

Maximum Permissible Unsupported Length

Stroke length

The stroke lengths of the actuators are available in multiples of 1 mm up to 5700 mm.

Other stroke lengths are available on request.
The end of stroke must not be used as a mechanical stop.
Allow an additional safety clear-ance at both ends equivalent to the linear movement of one revolution of the drive shaft, but at least 100 mm.

The use of an AC motor with frequency converter normally requires a larger clearance than that required for servo systems.
For advice, please contact your local Parker Origa technical support department.

* For Bi-parting version the max. load (F) is the total load of both carriers
$F = F_{carrier\,1} + F_{carrier\,2}$

k = Max. permissible distance between mountings/Profile Mounting for a given load F.

When loadings are below or up to the curve in the graph below the deflection will be max. 0.01 % of distance k.

Maximum Permissible Unsupported Length – Placing of Profile Mounting

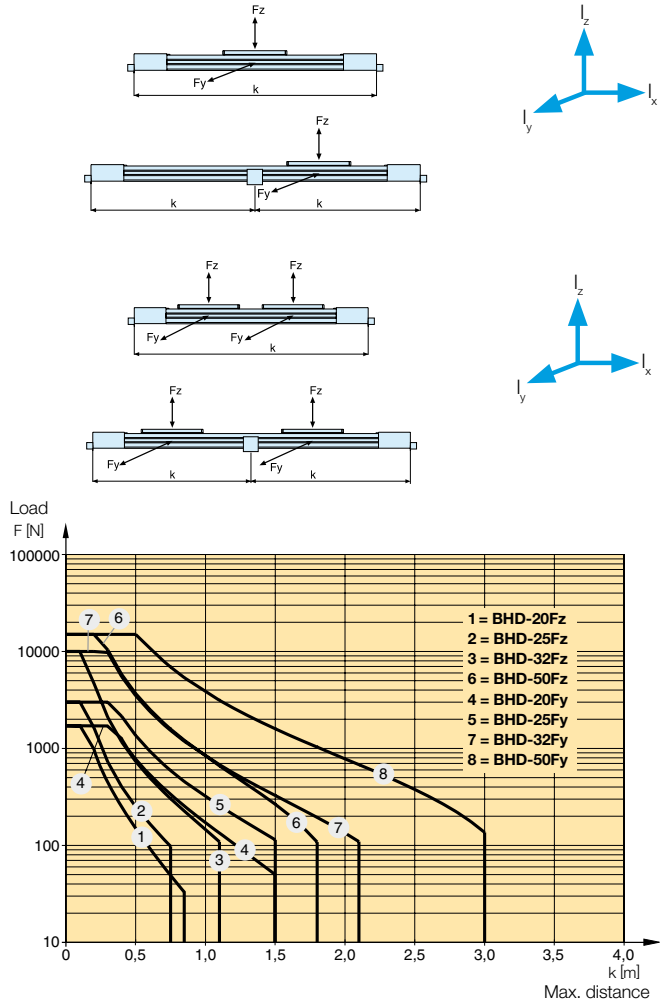

Parker Hannifin Corporation
Pneumatic Division - Europe

Tel: +45 63 12 83 00 | Email: ps@hymatik.com | www.hymatik.com | Hvidkaervej 27a, DK-5250 Odense SV, Denmark

Integrated Planetary Gearbox
Series OSP-E..BHD -
with Integrated Planetary Gearbox (Option)

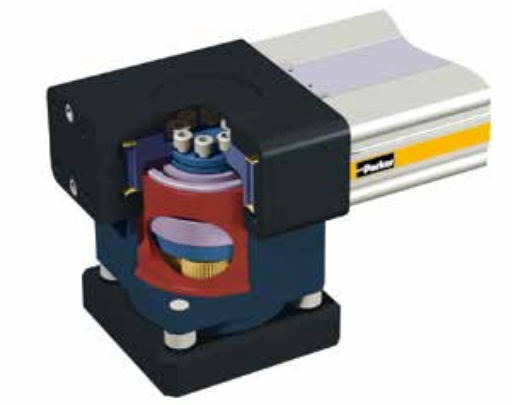

Features:

- Highly compact and rigid solution fully integrated in the drive cap housing
- Purpose designed for the BHD series.
- Available with three standard ratios (3, 5 and 10)
- Very low backlash
- A wide range of available motor flanges

Please contact your local Parker Origa technical support for available motor flanges.

Standard Version:

- Gearbox on opposite side to carrier.

Note:
When ordering, specify model/type of motor and manufacturer for correct motor flange.

Material:
Aluminium (AL-H) / Steel (St-H)

Performance Overview

Characteristics		Unit	Description		
Series			OSP-E25BHD	OSP-E32BHD	OSP-E50BHD
Ratio (1-stage)	i		3/5/10		
Max. axial load	F_{amax}	[N]	1550	1900	4000
Torsional rigidity (i=5)	C_{t21}	[Nm/arcmin]	3.3	9.5	25.0
Torsional rigidity (i=3/10)	C_{t21}	[Nm/arcmin]	2.8	7.5	222.0
Torsional backlash	J_t	[arcmin]	<12		
Linear motion per revolution of drive shaft		[mm]	220	280	360
Nominal input speed	n_{nom}	[min^{-1}]	3700	3400	2600
Max. input speed		n_{1max}	[min^{-1}] 6000		
No-load torque at Nominal input speed	T_{012}	[Nm]	<0.14	<0.51	<1.50
Lifetime		[h]	20 000		
Efficiency	η	[%]	>97		
Noise level (n_1=3000 min^{-1})	L_{PA}	[db]	<70	<72	<74

Dimensions

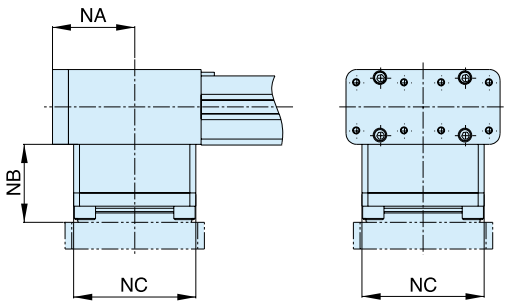

Dimension table (mm) and additional weight

Series	NA	NB	NC	Weight (Mass) [kg]
OSP-E25BHD	49	43	76	2.6
OSP-E32BHD	62	47	92	4.9
OSP-E50BHD	80	50	121	9.6

Tel: +45 63 12 83 00 | Email: ps@hymatik.com | www.hymatik.com | Hvidkaervej 27a, DK-5250 Odense SV, Denmark

Belt Actuator with Integrated Roller Guide
Size 25, 32, 50
Type: OSP-E..BHD

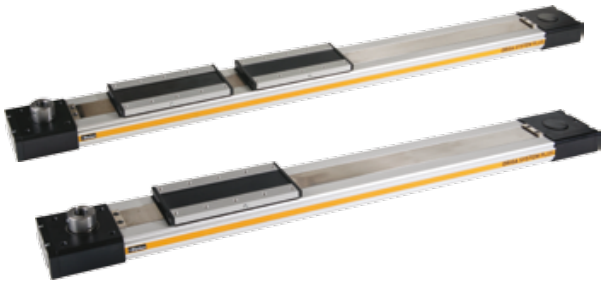

Standard Versions:
- Belt Actuator with integrated Roller Guide
- Drive shaft with clamp shaft or plain shaft
- Choice of motor mounting side
- Dovetail profile for mounting of accessories and the actuator itself

Options:
- Tandem version for higher moments
- Bi-parting version for synchronised movements
- Integrated planetary gearbox
- Drive shaft with
  – clamp shaft and plain shaft
  – hollow shaft with keyway
- Special drive shaft versions on request

Installation Instructions
Use the threaded holes in the end cap for mounting the actuator.

Check if profile mountings are needed using the maximum allowable unsupported length graph.

At least one end cap must be secured to prevent axial sliding when profile mountings are used.

Characteristics	Description
Series	OSP-E..BHD
Mounting	See drawings
Ambient temperature range	-30 °C to +80 °C
Installation	In any position
Encapsulation class	IP 54
Material	
Slotted profile	Extruded anodized aluminium
Belt	Steel-corded polyurethane
Pulley	Aluminium
Guide	Roller guide
Guide rail	Aluminium
Track	High alloyed steel
Roller cartridge	Steel rollers in aluminium housing
Steel band	Hardened, corrosion resistant steel
Screws, nuts	Zinc plated steel
Mountings	Zinc plated steel and aluminium

Weight (mass) and Inertia

Series	Weight (mass)[kg]			Inertia [x 10^{-6} kgm²]		
	At stroke 0 m	Add per metre stroke	Moving mass	At stroke 0 m	Add per metre stroke	per kg mass
OSP-E25BHD	3.8	4.3	1.0	984	197	821
OSP-E32BHD	7.7	6.7	1.9	3498	438	1459
OSP-E50BHD	22.6	15.2	4.7	19690	1489	3103
OSP-E25BHD*	5.7	4.3	2.0	1805	197	821
OSP-E32BHD*	11.3	6.7	3.8	6358	438	1459
OSP-E50BHD*	31.7	15.2	9.4	34274	1489	3103

* Version: Tandem and Bi-parting (Option)

Maintenance
Depending on operating conditions, inspection of the actuator is recommended after 12 months or 3000 km operation.
Please refer to the operating instructions supplied with the actuator.

First service start-up
The maximum values specified in the technical data sheet for the different products must not be exceeded. Before taking the actuator as a machine into service, the user must ensure the adherence to the EC Machine Directive 2006/42/EG.

Tel: +45 63 12 83 00 | Email: ps@hymatik.com | www.hymatik.com | Hvidkaervej 27a, DK-5250 Odense SV, Denmark

Sizing Performance Overview Maximum Loadings

Sizing of Actuator

The following steps are recommended for selection :

1. Determination of the lever arm length l_x, l_y and l_z from m_e to the centre axis of the actuator.
2. Calculation of the load F_x or F_y to the carrier caused by m_e
   $F = m_e \cdot g$
3. Calculation of the static and dynamic force F_A which must be transmitted by the belt.
   $F_{A(horizontal)} = F_a + F_0$
   $= m_g \cdot a + M_0 \cdot 2\pi / U_{ZR}$
   $F_{A(vertical)} = F_g + F_a + F_0$
   $= m_g \cdot g + m_g \cdot a + M_0 \cdot 2\pi / U_{ZR}$
4. Calculation of all static and dynamic bending moments M_x, M_y and M_z which occur in the application
   $M = F \cdot l$
5. Selection of maximum permissible loads via Table T3.
6. Calculation and checking of the combined load, which must not be higher than 1.
7. Checking of the maximum torque that occurs at the drive shaft in Table T2.
8. Checking of the required action force F_A with the permissible load value from Table T1.

For motor sizing, the effective torque must be determined, taking into account the cycle time.

Legend

- l = distance of a mass in the x-, y- and z-direction from the guide [m]
- m_e = external moved mass [kg]
- m_{LA} = moved mass of actuator [kg]
- m_g = total moved mass ($m_e + m_{LA}$) [kg]
- $F_{x/y}$ = load excerted on the carrier in dependence of the installation position [N]
- F_A = action force [N]
- M_0 = no-load torque [Nm]
- U_{ZR} = circumference of the pulley (linear movement per revolution) [m]
- g = gravity [m/s²]
- $a_{max.}$ = maximum acceleration [m/s²]

Performance Overview (T1)

Characteristics	Unit	Description		
Series		OSP-E25BHD	OSP-E32BHD	OSP-E50BHD
Max. speed	[m/s]	10	10	10
Linear motion per revolution drive shaft	[mm]	180	240	350
Max. rpm. drive shaft	[min⁻¹]	3000	2500	1700
Max. effective < 1 m/s:	[N]	1070	1870	3120
action force F_A 1-3 m/s:	[N]	890	1560	2660
at speed > 3-10 m/s:	[N]	550	1030	1940
No-load torque	[Nm]	1.2	2.2	3.2
Max. acceleration/deceleration	[m/s²]	40	40	40
Repeatability	[mm/m]	±0.05	±0.05	±0.05
Max. standard stroke length	[mm]	7000	7000	7000

Maximum Permissible Torque on Drive Shaft Speed / Stroke (T2)

OSP-E25BHD				OSP-E32BHD				OSP-E50BHD			
Speed [m/s]	Torque [Nm]	Stroke [m]	Torque [Nm]	Speed. [m/s]	Torque [Nm]	Stroke [m]	Torque [Nm]	Speed. [m/s]	Torque [Nm]	Stroke [m]	Torque [Nm]
1	31	1	31	1	71	1	71	1	174	1	174
2	28	2	31	2	65	2	71	2	159	2	174
3	25	3	31	3	59	3	60	3	153	3	138
4	23	4	25	4	56	4	47	4	143	4	108
5	22	5	21	5	52	5	38	5	135	5	89
6	21	6	17	6	50	6	32	6	132	6	76
7	19	7	15	7	47	7	28	7	126	7	66
8	18			8	46			8	120		
9	17			9	44			9	116		
10	16			10	39			10	108		

Important:
The maximum permissible torque on the drive shaft is the lowest value of the speed or stroke-dependent torque value.

Example above:
OSP-E25BHD, stroke 5 m, required speed 3 m/s from table T2
speed 3 m/s gives 25 Nm and stroke 5 m gives 21 Nm. Max. torque for this application is 21 Nm.

Maximum Permissible Loads (T3)

Series	Max. applied load Fy, Fz [N]	Max. moments [Nm] Mx	My	Mz
OSP-E25BHD	986	11	64	64
OSP-E32BHD	1348	19	115	115
OSP-E50BHD	3704	87	365	365

Loads, Forces and Moments

Combined loads

If the actuator is subjected to several forces, loads and moments at the same time, the maximum load is calculated with the equation shown here.
The maximum permissible loads must not be exceeded.

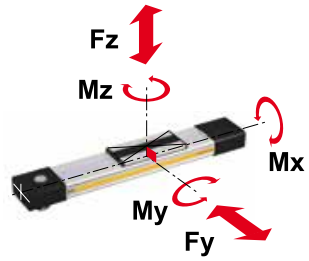

Equation of Combined Loads

$$\frac{Fy}{Fy\,(max)} + \frac{Fz}{Fz\,(max)} + \frac{Mx}{Mx\,(max)} + \frac{My}{My\,(max)} + \frac{Mz}{Mz\,(max)} \leq 1$$

The total of the loads must not exceed >1 under any circumstances.

$M = F \cdot l$ [Nm]
$M_x = M_{x\,static} + M_{x\,dynamic}$
$M_y = M_{y\,static} + M_{y\,dynamic}$
$M_z = M_{z\,static} + M_{z\,dynamic}$

The distance (l_x, l_y, l_z) for calculation of moments relates to the centre axis of the actuator. Bending moments are calculated from the centre of the actuator and F indicates actual force.

Maximum Permissible Unsupported Length

Stroke length

The stroke lengths of the actuators are available in multiples of 1 mm up to 5700 mm.

Other stroke lengths are available on request.
The end of stroke must not be used as a mechanical stop.
Allow an additional safety clearance at both ends equivalent to the linear movement of one revolution of the drive shaft, but at least 100 mm.
The use of an AC motor with frequency converter normally requires a larger clearance than that required for servo systems.

For advice, please contact your local Parker Origa technical support department.

* For the bi-parting version the maximum load (F) complies with the total of the load at both carriers.
$F = F_{carriage\ 1} + F_{carriage\ 2}$

k = Maximum permissible distance between mountings/mid-section support for a given load F.

If the loads are below or up to the curve in the graph the deflection will be max. 0.01 % of distance k.

Maximum Permissible Unsupported Length – Placing of Profile Mounting

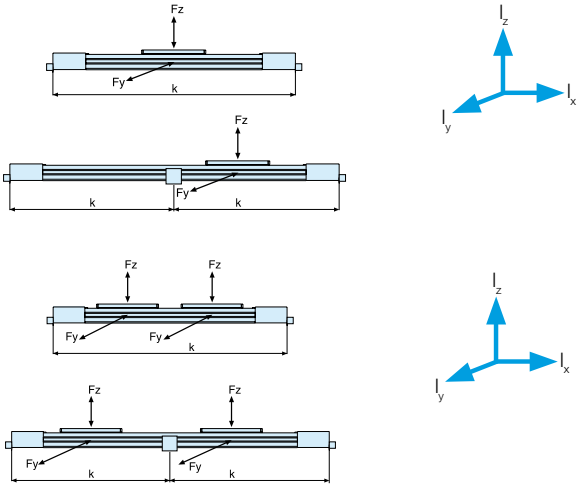

Loads

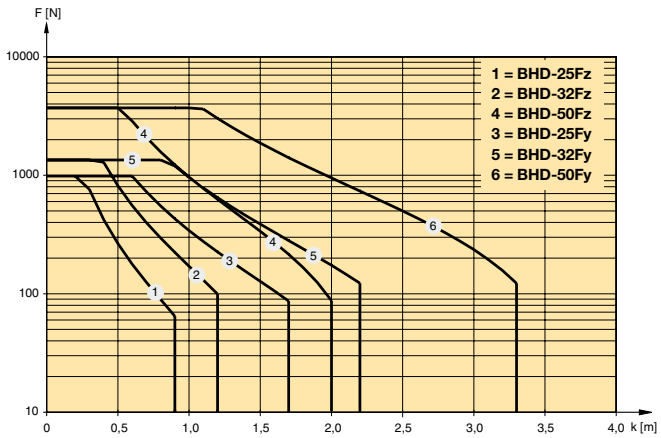

Max. distance

Tel: +45 63 12 83 00 | Email: ps@hymatik.com | www.hymatik.com | Hvidkaervej 27a, DK-5250 Odense SV, Denmark

Options and Accessories

OSP-E..BV, Vertical belt actuator with integrated ball bearing guide

STANDARD VERSION OSP-E..BV

Standard actuator head with clamp shaft or plain shaft and integrated ball bearing guide with two carriers.
Choice of side on which gearbox or motor is to be mounted.

DRIVE SHAFT

"CLAMP SHAFT AND PLAIN SHAFT" OR "DOUBLE PLAIN SHAFT"
e.g. for parallel operation of two Z-axes with an intermediate drive shaft.

Drive Shaft with Clamp Shaft



Drive Shaft with Plain Shaft



Drive Shaft with Clamp Shaft and Plain Shaft



Drive Shaft with Double Plain Shaft



OPTIONS

TANDEM
Additional actuator head and two additional carriers for higher bending moments.



HOLLOW SHAFT WITH KEYWAY
For direct connection of gearbox or motor with keyway.



ACCESSORIES

MOTOR MOUNTINGS
For connection of gearbox or motor direct to drive shaft with clamp shaft, or with a motor coupling to drive shaft with plain shaft.



MAGNETIC SWITCHES SET
Magnetic switches with connector, mounting rail and magnets for contactless sensing of the end positions. Cable (suitable for cable chain) can be ordered separately in 5 m, 10 m or 15 m length.

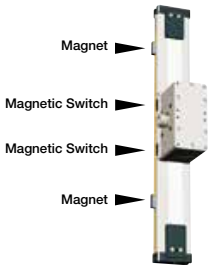

MULTI-AXIS SYSTEMS
For modular assembly of actuators up to multi-axis systems.

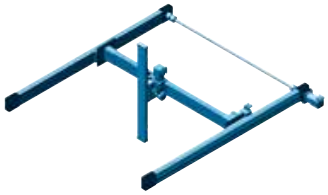

Tel: +45 63 12 83 00 | Email: ps@hymatik.com | www.hymatik.com | Hvidkaervej 27a, DK-5250 Odense SV, Denmark

Vertical belt actuator with integrated ball bearing guide in multi-axis systems

The OSP-E..BV vertical belt actuator with integrated ball bearing guide has been specially developed for lifting movements in the Z-axis.
The especially low vibration OSP-E..BV vertical actuator in combination with the heavy duty series OSP-E..BHD meets the highest demands in portal and handling applications.

Advantages

- Fixed actuator head for low moving mass
- Integrated ball bearing guide for high bending moments
- Magnetic switch set for contactless position sensing
- Easy to install
- Low maintenance

Features

- High acceleration and speed
- Drive Shaft versions with clamp shaft or plain shaft
- Power transmission by belt
- Moving axis profile
- Complete motor and control packages

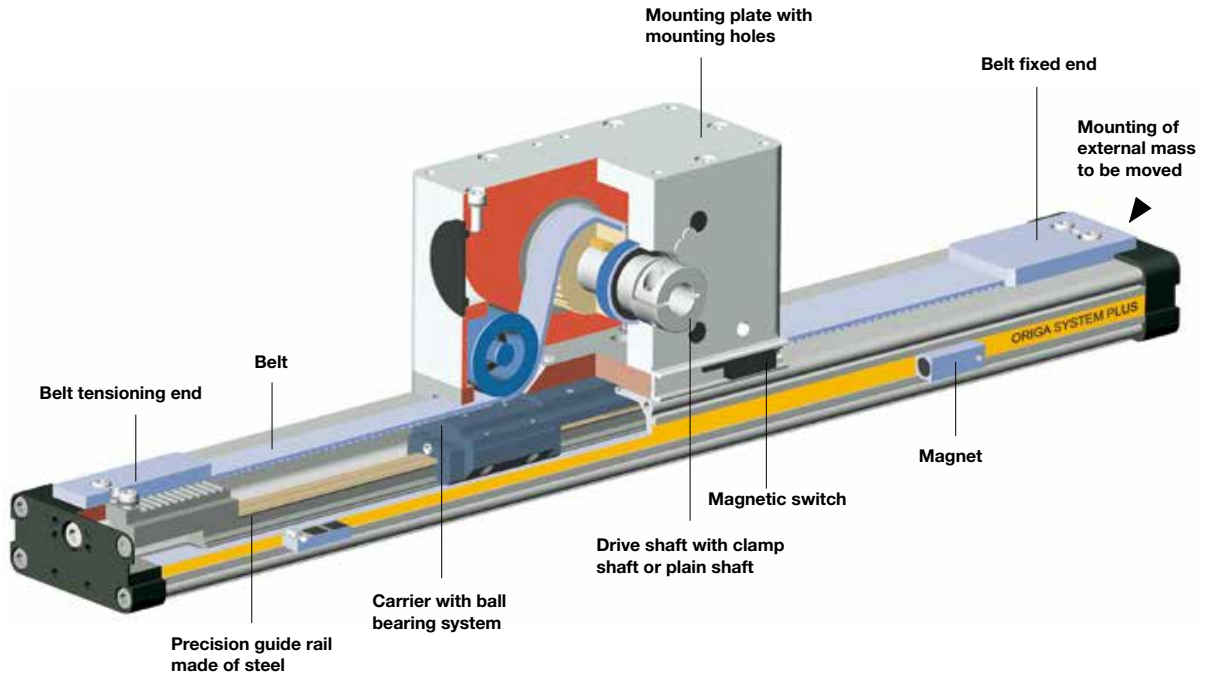

Take the easy route and load all the dimensions into your system. The file is suitable for all current CAD systems – available on CD-Rom or at www.parker-origa.com



Vertical Belt Actuator with Integrated Ball Bearing Guide
Size 20, 25
Type: OSP-E..BV



Standard Versions:
- Vertical belt actuator with integrated ball bearing guide
- Drive shaft with clamp shaft or plain shaft
- Choice of motor mounting side

Options:
- Tandem version for higher moments
- Drive shaft with
  – clamp shaft and plain shaft or double plain shaft
  – hollow shaft with keyway
- Special drive shaft versions on request

Installation Instructions
Make sure that the OSP-E..BV is always operated by motor with holding brake on the actuator side. For the mounting of the external mass to be moved there are threaded holes in the end caps. Before mounting, check the correct centre of gravity distance from the table.
Mount the external mass on the belt fixed end, so that the belt tension can be checked and adjusted at the belt tensioning end without dismantling.

Characteristics	Description
Series	OSP-E..BV
Mounting	See drawings
Ambient temperature range	-30 °C to +80 °C
Installation	Vertical
Encapsulation class	IP 20
Material	
Profile	Extruded anodized aluminium
Belt	Steel-corded polyurethane
Pulley	Aluminium
Guide	Ball bearing guide
Guide rail	Hardened steel rail with high precision, accuracy class N
Guide carrier preloaded 0.08 x C, accuracy class N	Steel carrier with integrated wiper system, grease nipples,
Screws, nuts	Zinc plated steel

Weight (mass) and Inertia

Series	Total weight (Mass) [kg]		Moving mass [kg]		Inertia [x 10^{-6} kgm^2]		
	At stroke 0 m	Actuator head	At stroke 0 m	Add per metre stroke	At Stroke 0 m	Add per metre stroke	Add per kg mass
OSP-E20BV	3.4	1.9	1.6	4.0	486	1144	289
OSP-E25BV	7.7	5.3	2.4	4.4	1695	2668	617
OSP-E20BV*	5.3	2 x 1.9	1.6	4.0	533	1144	289
OSP-E25BV*	13	2 x 5.3	2.4	4.4	1915	2668	617

* Version: Tandem (Option)

Maintenance
Depending on operating conditions, inspection of the actuator is recommended after 12 months or 3000 km operation.
Please refer to the operating instructions supplied with the actuator.

First service start-up
The maximum values specified in the technical data sheet for the different products must not be exceeded. Before taking the actuator as a machine into service, the user must ensure the adherence to the EC Machine Directive 2006/42/EG.

Tel: +45 63 12 83 00 | Email: ps@hymatik.com | www.hymatik.com | Hvidkaervej 27a, DK-5250 Odense SV, Denmark

Sizing Performance Overview Maximum Loadings

Sizing of Actuator

The following steps are recommended for selection :

1. Determination of the lever arm length l_x, l_y and l_z from m_e to the centre axis of the actuator.
2. Calculation of the static and dynamic force F_A which must be transmitted by the belt.
   $F_A = F_g + F_a + F_0$
   $= m_g \cdot g + m_g \cdot a + M_0 \cdot 2\pi / U_{ZR}$
3. Calculation of all static and dynamic moments M_x, M_y and M_z which occur in the application.
   $M = F \cdot l$
4. Selection of maximum permissible loads via Table T3.
5. Calculation and checking of the combined load, which must not be higher than 1.
6. Checking of the maximum moment that occurs at the drive shaft in Table T2.
7. Checking of the required action force F_A with the permissible load value from Table T1.

For motor sizing, the effective torque must be determined, taking into account the cycle time.

Legend

l = distance of a mass in the x-, y- and z-direction from the guide [m]

m_e = external moved mass [kg]

m_{LA} = moved mass of actuator [kg]

m_g = total moved mass ($m_e + m_{LA}$) [kg]

F_A = action force [N]

M_0 = no-load torque [Nm]

U_{ZR} = circumference of the pulley (linear movement per revolution) [m]

g = gravity [m/s²]

a_{max} = maximum acceleration [m/s²]

Performance Overview (T1)

Characteristics		Unit	Description	
Series			OSP-E20BV	OSP-E25BV
Max. Speed		[m/s]	3.0	5.0
Linear motion per revolution of drive shaft		[mm/U]	108	160
Max. rpm. drive shaft		[min⁻¹]	1700	1875
Max. effective action force F_A at speed	1 m/s	[N]	650	1430
	1 - 2 m/s	[N]	450	1200
	> 3 - 5 m/s	[N]	–	1050
No-load torque [2]		[Nm]	0.6	1.2
Max. acceleration/deceleration		[m/s²]	20	20
Repeatability		+/- [mm/m]	0.05	0.05
Max. standard stroke length [1]		[mm]	1000	1500
Max. recomended permissible mass [3]		[kg]	10	20

[1] Longer strokes on request

[2] As a result of static friction force

[3] vertical

Maximum Permissible Torque on Drive Shaft Speed / Stroke (T2)

OSP-E-20BV				OSP-E-25BV			
Speed [m/s]	Torque [Nm]	Stroke [m]	Torque [Nm]	Speed [m/s]	Torque [Nm]	Stroke [m]	Torque [Nm]
1	19	1	17	**1**	36	1	(36)
2	17	2	11	2	30	2	36
3	16			3	(30)		
				4	28		
				5	27		

Important:
The maximum permissible torque on the drive shaft is the lowest value of the speed or stroke-dependent torque value.

Example above:
OSP-E25BV required speed v = 3 m/s and stroke = 1 m.

Accordingly Table T2 shows permissible moments of 30 Nm for the speed and 36 Nm for the stroke. Therefore the maximum moment at the drive shaft is determined by the speed and must not exceed 30 Nm.

Tel: +45 63 12 83 00 | Email: ps@hymatik.com | www.hymatik.com | Hvidkaervej 27a, DK-5250 Odense SV, Denmark

Loads, Forces and Moments

Combined loads

If the actuator is subjected to several forces, loads and moments at the same time, the maximum load is calculated with the equation shown here.
The maximum permissible loads must not be exceeded.

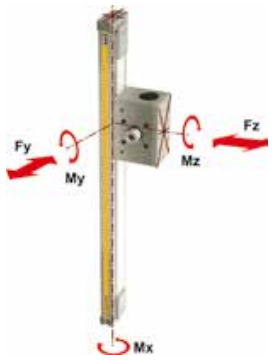

$M = F \cdot l$ [Nm]
$M_x = M_{x\,static} + M_{x\,dynamic}$
$M_y = M_{y\,static} + M_{y\,dynamic}$
$M_z = M_{z\,static} + M_{z\,dynamic}$

The distance l (lx, ly, lz) for calculation of the bending moments relates to the centre axis of the actuator.

Maximum Permissible Loads

T3

Size	Max. applied load [N] Fy [N]	Fz [N]	Max. moments [Nm] Mx	My	Mz
OSP-E20BV	1600	1600	20	100	100
OSP-E25BV	2000	3000	50	200	200

Equation of Combined Loads

$$\frac{Fz}{Fz\,(max)} + \frac{Mx}{Mx\,(max)} + \frac{My}{My\,(max)} + \frac{Mz}{Mz\,(max)} \leq 1$$

The total of the loads must not exceed >1 under any circumstances.

Distance of Centre of Gravity of External Mass from Mid-Point of Actuator

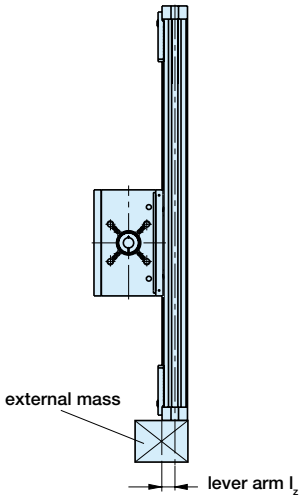

Mass [kg]	OSP-E20BV Lever arm l_z [mm]	OSP-E20BV Max. permissible acceleration/ deceleration [m/s²]	OSP-E25BV Lever arm l_z [mm]	OSP-E25BV Max. permissible acceleration/ deceleration [m/s²]
> 3 to 5	0	20	50	20
> 5 to 10	0	20	40	20
> 10 to 15	-	-	35	20
> 15 to 20	-	-	30	15

Parker Hannifin Corporation
Pneumatic Division - Europe

Tel: +45 63 12 83 00 | Email: ps@hymatik.com | www.hymatik.com | Hvidkaervej 27a, DK-5250 Odense SV, Denmark

Options and Accessories

OSP-E..B
Belt actuator with internal plain bearing guide

STANDARD VERSIONS OSP-E..B

Carrier with internal guidance and magnet packet for contactless position sensing. Dovetail profile for mounting of accessories and the actuator itself.

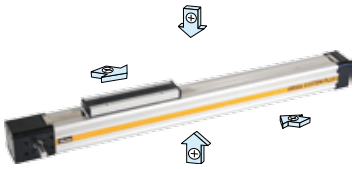

DRIVE SHAFT VERSIONS
– Plain shaft or
– double plain shaft (Option)
e.g. to drive two actuators in parallel.

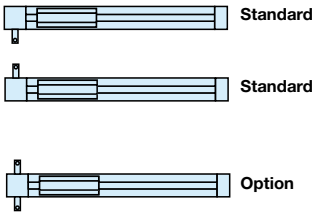

OPTIONS

TANDEM
For higher moment support.



BI-PARTING
For perfectly synchronised bi-parting movements.



ACCESSORIES

MOTOR MOUNTING



END CAP MOUNTING
For end-mounting of the actuator.



PROFILE MOUNTING
For supporting long actuators or mounting the actuator on the dovetail grooves.



CLEVIS MOUNTING
Carrier with tolerance and parallelism compensation to drive external linear guides.

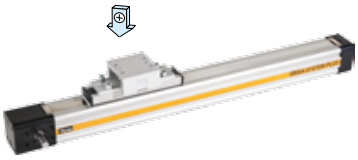

INVERSION MOUNTING
The inversion mounting, mounted on the carrier, transfers the driving force to the opposite side, e.g. for dirty environments.

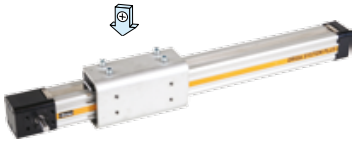

MAGNETIC SWITCHES SERIES RST AND EST
For contactless position sensing of end stop and intermediate carrier positions.



Tel: +45 63 12 83 00 | Email: ps@hymatik.com | www.hymatik.com | Hvidkaervej 27a, DK-5250 Odense SV, Denmark

Belt actuator with internal plain bearing guide for point-to-point applications

A completely new generation of actuators which can be integrated into any machine layout neatly and simply.

Advantages

- Precise path and position control
- High speed operation
- Easy installation
- Low maintenance
- Ideal for precise point-to-point applications



Take the easy route and load all the dimensions into your system. The file is suitable for all current CAD systems – available on CD-Rom or at www.parker-origa.com

Features

- Integrated drive and guidance system
- Tandem configuration with increased carrier distance for higher moment supports
- Long available strokes
- Complete motor and control packages
- Diverse range of accessories and mountings
- Bi-parting and special options available

Tandem configuration with increased carrier distance for higher moment supports.
Bi-parting version for precise synchronized movements



The dovetailed mounting rails of the new actuator expand its function into that of a universal system carrier.
Modular system components are simply clamped on.

POWERSLIDE
Roller bearing precision guidance for smooth travel and high dynamic or static loads.

PROLINE
The compact aluminium roller guide for high loads and velocities.

Tel: +45 63 12 83 00 | Email: ps@hymatik.com | www.hymatik.com | Hvidkaervej 27a, DK-5250 Odense SV, Denmark

Belt Actuator with Internal Plain Bearing Guide
Size 25, 32, 50
Type: OSP-E..B



Standard Versions:
- Standard carrier with internal plain bearing guide
- Dovetail profile for mounting of accessories and the actuator itself
- Position of drive shafts

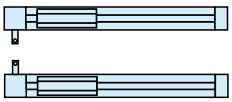

Options:
- Tandem version
- Bi-parting version for synchronized movements
- Drive shaft with double plain shaft

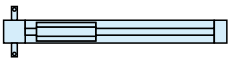

Installation Instructions
Use the threaded holes in the end cap for mounting the actuator. See if Profile Mountings are needed using the maximum allowable unsupported length graph.
At least one end cap must be secured to prevent axial sliding when profile mounting is used.
When the actuator is moving an externally guided load, the compensation must be used.

The actuators can be fitted with the standard carrier mounting facing in any direction.
To prevent contamination such as fluid ingress, the actuator should be fitted with its sealing band facing downwards.
The inversion mounting can be fitted to transfer the driving force to the opposite side.

Characteristics	Description
Series	OSP-E..B
Mounting	See drawings
Ambient temperature range	-30 °C to +80 °C
Installation	See table
Encapsulation class	IP 54
Material	
Slotted Profile	Extruded anodized aluminium
Belt	Steel-corded polyurethane
Pulley	Aluminium
Guide bearings	Low friction plastic
Sealing band	Hardened corrosion resistant steel
Screws, nuts	Zinc plated steel
Mountings	Zinc plated steel and aluminium

Weight (mass) and Inertia

Series	Weight (mass) [kg]			Inertia [x 10^{-6} kgm^2]	
	at stroke 0 m	ad per meter stroke	moving mass	at stroke 0 m	ad per meter stroke
OSP-E25B	0.9	1.6	0.2	25	6.6
OSP-E32B	1.9	3.2	0.4	43	10
OSP-E50B	5.2	6.2	1.0	312	45
OSP-E25B*	1.2	1.6	0.5	48	6.6
OSP-E32B*	2.3	3.2	0.8	83	10
OSP-E50B*	6.3	6.2	2.1	585	45

* Version: Tandem and Bi-parting (Option)

Maintenance
All moving parts are long-term lubricated for a normal operational environment. Parker Origa recommends a check and lubrication of the actuator, and if necessary a change of the belt and wear parts, after an operation time of 12 months of operation or 3 000 km travel of distance.
Additional greasing is easily done by using nipples in the slotted profile. Please refer to the operating instructions supplied with the actuator.

First service start-up
The maximum values specified in the technical data sheet for the different products must not be exceeded. Before taking the actuator as a machine into service, the user must ensure the adherence to the EC Machine Directive 2006/42/EG.

Tel: +45 63 12 83 00 | Email: ps@hymatik.com | www.hymatik.com | Hvidkaervej 27a, DK-5250 Odense SV, Denmark

Sizing Performance Overview Maximum Loadings

Sizing of Actuator

The following steps are recommended for selection :

1. Required acceleration,
2. Required torque is shown on page 332
3. Check that maximum values in the table 3 are not exceeded
4. Drive shaft by using table T2. (Pay attention to note under table) If value is lower than required, overview the moving profile or select if possible a bigger unit.
5. Before sizing and specifying the motor, the average torque must be calculated using the cycle time of the application.
6. Check that the maximum allowable unsupported length is not exceeded.

Performance Overview

Characteristics		Unit	Description		
Size			OSP-E25B	OSP-E32B	OSP-E50B
Max. speed		[m/s]	2	3	5
Linear motion per revolution, drive shaft		[mm]	60	60	100
Max. rpm drive shaft		[min^{-1}]	2 000	3 000	3 000
Max. effective	< 1 m/s:	[N]	50	150	425
action force	1- 2 m/s:	[N]	50	120	375
F_A at speed	> 2 m/s:	[N]	–	100	300
No-load torque		[Nm]	0.4	0.5	0.6
Max. acceleration/deceleration		[m/s^2]	10	10	10
Repeatability		[mm/m]	±0.05	±0.05	±0.05
Max. stroke length OSP-E..B		[mm]	3000	5000	5000
Max. stroke length OSP-E..B*		[mm]	2 x 1500	2 x 2500	2 x 2500

* Bi-parting version

Maximum Permissible Torque on Drive Shaft Speed / Stroke T2

OSP-E25B				OSP-E32B				OSP-E50B			
Speed [m/s]	Torque [Nm]	Stroke [m]	Torque [Nm]	Speed. [m/s]	Torque [Nm]	Stroke [m]	Torque [Nm]	Speed. [m/s]	Torque [Nm]	Stroke [m]	Torque [Nm]
1	0.9	1	0.9	1	2.3	1	2.3	1	10.0	1	10.0
2	0.9	2	0.9	2	2.0	2	2.3	2	9.5	2	10.0
		3	0.9	3	1.8	3	2.3	3	9.0	3	9.0
						4	2.3	4	8.0	4	7.0
						5	1.8	5	7.5	5	6.0

Important:
The maximum permissible torque on the drive shaft is the lowest value of the speed or stroke-dependent torque value.

Example above:
OSP-E32B stroke 2 m, required speed 3 m/s;
From table T2: speed 3 m/s gives 1.8 Nm and stroke 2 m gives 2.3 Nm.
Max. torque for this application is 1.8 Nm.

Loads, Forces and Moments

Combined loads

If the actuator is subjected to several forces, loads and moments at the same time, the maximum load is calculated with the equation shown here.
The maximum permissible loads must not be exceeded.

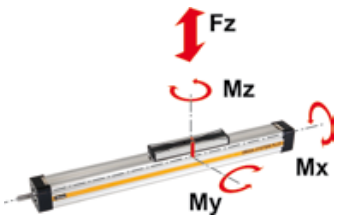

$M = F \cdot l$ [Nm]
$M_x = M_{x\,static} + M_{x\,dynamic}$
$M_y = M_{y\,static} + M_{y\,dynamic}$
$M_z = M_{z\,static} + M_{z\,dynamic}$

The distance l (lx, ly, lz) for calculation of the bending moments relates to the centre axis of the actuator.

Maximum Permissible Loads T3

Size	Max. applied load [N] Fz	Max. moments [Nm] Mx	My	Mz
OSP-E25B	500	2	12	8
OSP-E32B	1200	8	25	16
OSP-E50B	3000	16	80	32
OSP-E..B Bi-partional	The maximum load F must be equally distributed among the two carriers			

Equation of Combined Loads

$$\frac{Fz}{Fz\ (max)} + \frac{Mx}{Mx\ (max)} + \frac{My}{My\ (max)} + \frac{Mz}{Mz\ (max)} \leq 1$$

The total of the loads must not exceed >1 under any circumstances.

Tel: +45 63 12 83 00 | Email: ps@hymatik.com | www.hymatik.com | Hvidkaervej 27a, DK-5250 Odense SV, Denmark

Maximum Permissible Unsupported Length

Stroke length

The stroke lengths of the actuators are available in multiples of 1 mm up to max.
OSP-E25B: 3 m / 2 x 1.5 m *
OSP-E32B: 5 m / 2 x 2.5 m *
OSP-E50B: 5 m / 2 x 2.5 m *
* Version: Bi-partional

Other stroke lengths are available on request.

The end of stroke must not be used as a mechanical stop.
Allow an additional safety clearance at both ends equivalent to the linear movement of one revolution of the drive shaft.
The use of an AC motor with frequency converter normally requires a larger safety clearance than that required for servo systems.
For advise, please contact your local Parker Origa technical support department.

Maximum Permissible Unsupported Length – Placing of Profile Mounting

Series OSP-E..B

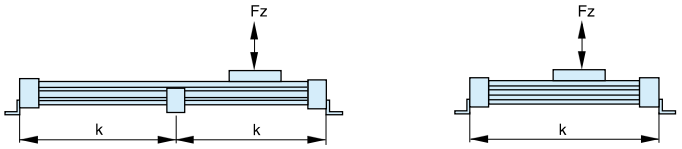

Series OSP-E..B
Bi-parting version

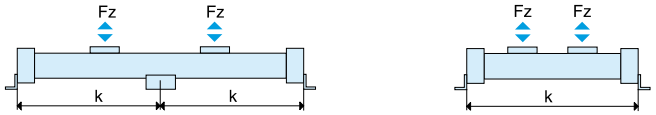

k = Maximum permissible distance between mountings/mid-section support for a given load F.

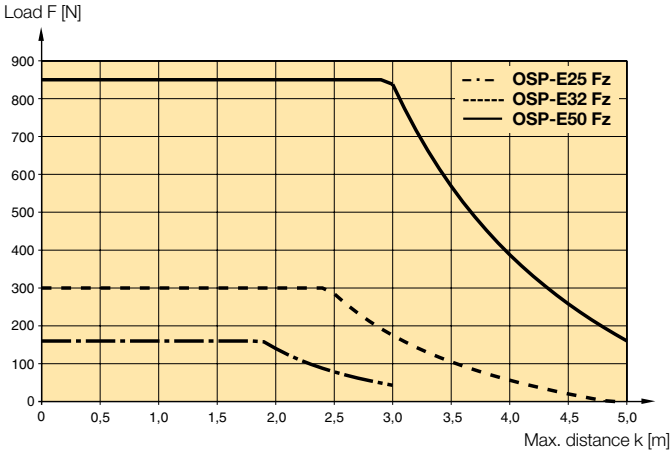

(Up to the curve in the above graph the deflection will be max. 0.2 % of distance k.)

Mounting on the Drive Shaft

Do not expose the drive shaft to uncontrolled axial or radial forces when mounting coupling or pulley, a steadying block should be used.

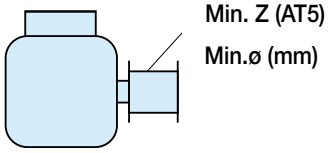

Pulleys

Minimum allowable number of teeth Z (AT5) at maximum applied torque.

Size	Min. Z	Min. ø
OSP-E25B	24	38
OSP-E32B	24	38
OSP-E50B	36	57

Tel: +45 63 12 83 00 | Email: ps@hymatik.com | www.hymatik.com | Hvidkaervej 27a, DK-5250 Odense SV, Denmark

Required Acceleration

Distance / Time Graph

Using the required travel distance and total time, the adjacent graphs show the required acceleration based on maximum speed.

The graphs assume that acceleration and deceleration are equal.

Please note that specifying non-essential high acceleration or short cycle time will result in an oversized motor.

Max speed 1 m/s

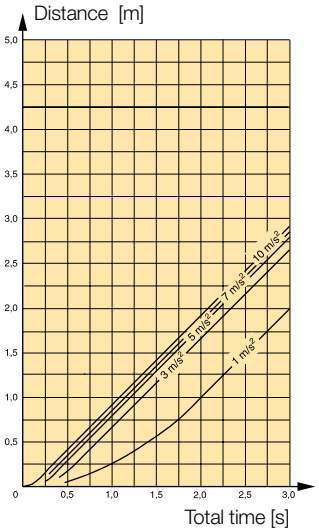

Max speed 2 m/s

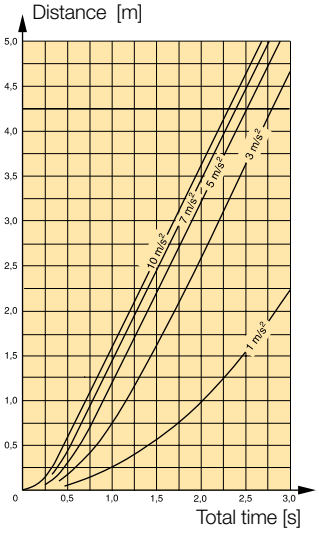

Max speed 3 m/s

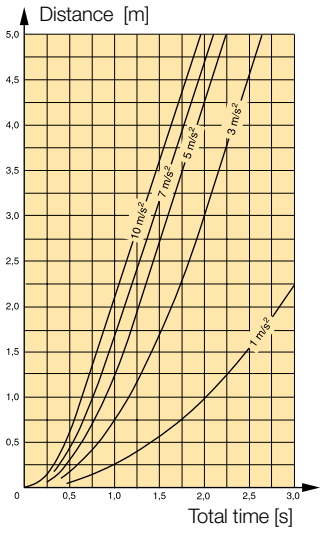

Max speed 5 m/s

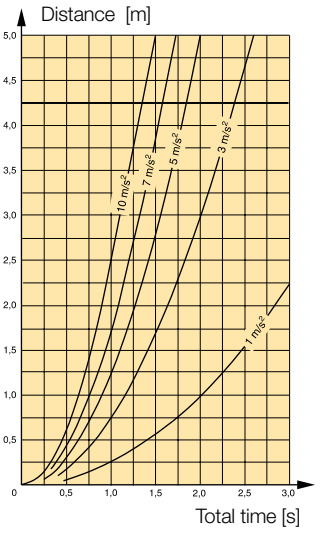

Required Torque / Mass

Using the known mass, the direction of the application and the required acceleration from the distance-time graphs, the actuator can be sized and the required torque is shown in the adjacent graphs.
Mass in graphs = Load + moving mass of the actuator.

Please note:
When using an additional guide, please add the mass of the carriage to the total moving mass.

Size OSP-E25B, Horizontal Application

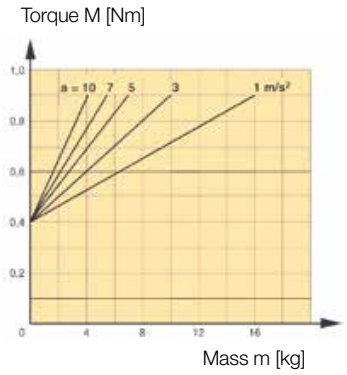

Size OSP-E25B, Vertical Application

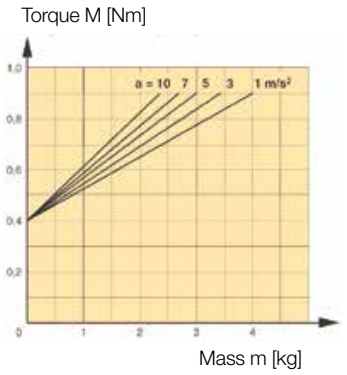

Size OSP-E32B, Horizontal Application

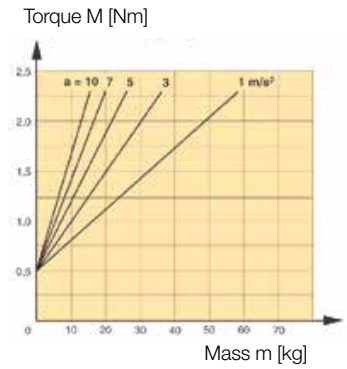

Size OSP-E32B, Vertical Application

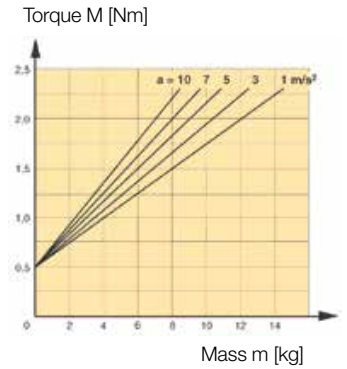

Size OSP-E50B, Horizontal Application

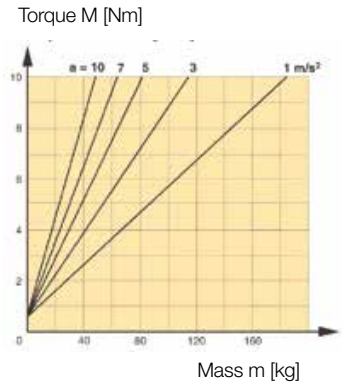

Size OSP-E50B, Vertical Application

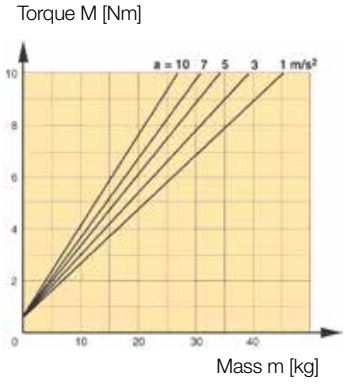

Tel: +45 63 12 83 00 | Email: ps@hymatik.com | www.hymatik.com | Hvidkaervej 27a, DK-5250 Odense SV, Denmark

Ball screw actuator with internal plain bearing guide for high accuracy applications

A completely new generation of actuators which can be integrated into any machine layout neatly and simply.

Advantages

- Accurate path and position control
- High force output
- Easy installation
- Excellent slow speed characteristics
- Ideal for precise traverse operations (e.g. machine feeds) and lifting applications

Features

- Integrated drive and guidance system
- Complete motor and control packages
- Diverse range of accessories and mountings
- Optimal screw pitches (5, 10, 25 mm)

Clean Room-Version certified to DIN EN ISO 14644-1



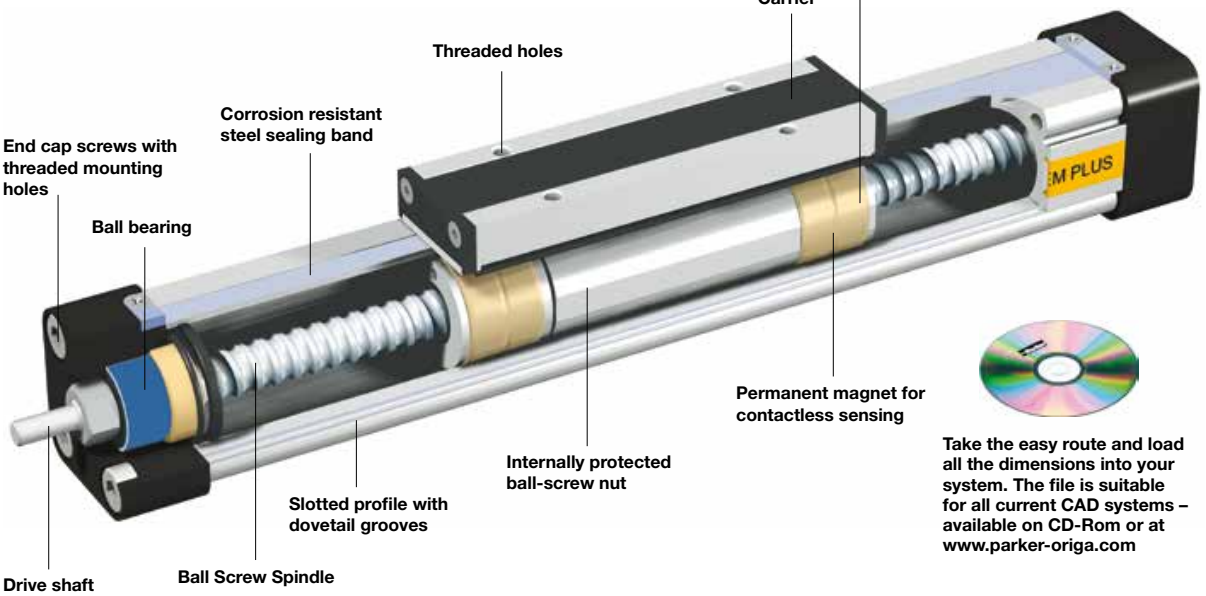

Take the easy route and load all the dimensions into your system. The file is suitable for all current CAD systems – available on CD-Rom or at www.parker-origa.com

The dovetailed mounting rails of the new actuator expand its function into that of a universal system carrier.
Modular system components are simply clamped on.

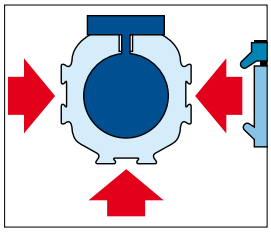

Heavy Duty guide
HD linear guides for heavy duty applications

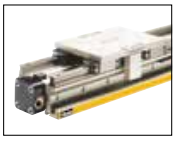

SFI-plus displacement measuring system



SLIDELINE
Combination with linear guides provides for heavier loads.



POWERSLIDE
Roller bearing precision guidance for smooth travel and high dynamic or static loads.

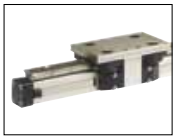

PROLINE
The compact aluminium roller guide for high loads and velocities.



Tel: +45 63 12 83 00 | Email: ps@hymatik.com | www.hymatik.com | Hvidkaervej 27a, DK-5250 Odense SV, Denmark

Ball Screw Actuator with Internal Plain Bearing Guide

Size 25, 32, 50

Type: OSP-E..SB



Standard Versions:

- Standard carrier with internal plain bearing guide
- Dovetail profile for mounting of accessories and the actuator itself
- Pitches of Ball Screw Spindle
  Type OSP-E25 : 5 mm
  Type OSP-E32: 5 , 10 mm
  Type OSP-E50: 5 , 10, 25 mm

Options:

- Tandem version
- Clean room-version, according to DIN EN ISO 14644-1
- Displacement Measuring System SFI-plus

Installation Instructions

Use the threaded holes in the end cap for mounting the actuator. See if Profile Mountings are needed using the maximum allowable unsupported length graph.
At least one end cap must be secured to prevent axial sliding when profile mounting is used.
When the actuator is moving an externally guided load, the compensation must be used.

The actuators can be fitted with the standard carrier mounting facing in any direction.
To prevent contamination such as fluid ingress, the actuator should be fitted with its sealing band facing downwards.
The inversion mounting can be fitted to transfer the driving force to the opposite side.

Characteristics	Description
Series	OSP-E..SB
Ambient temperature range	-20 °C to +80 °C
Installation	In any position
Mounting	See drawing
Encapsulation class	IP 54
Material	
Slotted Profile	Extruded anodized aluminium
Ball screw	Hardened steel
Ball screw nut	Hardened steel
Guide bearings	Low friction plastic
Sealing band	Hardened corrosion resistant steel
Screws, nuts	Zinc plated steel
Mountings	Zinc plated steel and aluminium

Weight (mass) and Inertia

Series	Weight (mass) [kg]			Inertia [x 10^{-6} kgm^2]	
	at stroke 0 m	ad per meter stroke	moving mass	at stroke 0 m	ad per meter stroke
OSP-E25SB	0.8	2.3	0.2	2.2	11
OSP-E32SB	2.0	4.4	0.4	8.4	32
OSP-E50SB	5.2	9.4	1.2	84.0	225

Maintenance

All moving parts are long-term lubricated for a normal operational environment. Parker Origa recommends a check and lubrication of the actuator, and if necessary a change of the belt and wear parts, after an operation time of 12 months of operation or 3 000 km travel of distance.
Please refer to the operating instructions supplied with the actuator.

First service start-up

The maximum values specified in the technical data sheet for the different products must not be exceeded. Before taking the actuator as a machine into service, the user must ensure the adherence to the EC Machine Directive 2006/42/EG.

Tel: +45 63 12 83 00 | Email: ps@hymatik.com | www.hymatik.com | Hvidkaervej 27a, DK-5250 Odense SV, Denmark

Sizing Performance Overview Maximum Loadings

Sizing of Actuator

The following steps are recommended for selection :

1. Recommended maximum acceleration is shown in graphs
2. Required torque is shown in graphs
3. Check that maximum values in the adjacent charts are not exceeded.
4. When sizing and specifying the motor, the RMS-average torque must be calculated using the cycle time of the application.
5. Check that the maximum allowable unsupported length is not exceeded.

Performance Overview

Characteristics	Unit	Description					
Series		OSP-E25SB	OSP-E32SB		OSP-E50SB		
Pitch	[mm]	5	5	10	5	10	25
Max. speed	[m/s]	0.25	0.25	0.5	0.25	0.5	1.25
Linear motion per revolution drive shaft	[mm]	5	5	10	5	10	25
Max. rpm, drive shaft	[min^{-1}]	3 000	3 000		3 000		
Max. effective action force F_A	[N]	250	600		1 500		
Corresponding torque on drive shaft	[Nm]	0.35	0.75	1.3	1.7	3.1	7.3
No-load torque	[Nm]	0.2	0.2	0.3	0.3	0.4	0.5
Max. allowable torque on drive shaft	[Nm]	0.6	1.5	2.8	4.2	7.5	20
Repeatability	[mm/m]	±0.05	±0.05		±0.05		
Max. Standard stroke length	[mm]	1100	2000		3200		

Loads, Forces and Moments

Combined loads

If the actuator is subjected to several forces, loads and moments at the same time, the maximum load is calculated with the equation shown here.
The maximum permissible loads must not be exceeded.

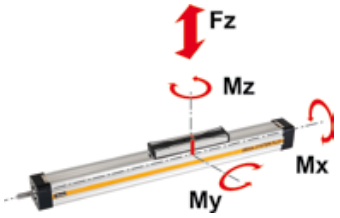

$M = F \cdot l$ [Nm]
$M_x = M_{x\ static} + M_{x\ dynamic}$
$M_y = M_{y\ static} + M_{y\ dynamic}$
$M_z = M_{z\ static} + M_{z\ dynamic}$

The distance l (lx, ly, lz) for calculation of the bending moments relates to the centre axis of the actuator.

Maximum Permissible Loads

Size	Max. applied load [N] Fz	Max. moments [Nm] Mx	My	Mz
OSP-E25SB	500	2	12	8
OSP-E32SB	1200	8	25	16
OSP-E50SB	3000	16	80	32

Equation of Combined Loads

$$\frac{Fz}{Fz\ (max)} + \frac{Mx}{Mx\ (max)} + \frac{My}{My\ (max)} + \frac{Mz}{Mz\ (max)} \leq 1$$

The total of the loads must not exceed >1 under any circumstances.

Tel: +45 63 12 83 00 | Email: ps@hymatik.com | www.hymatik.com | Hvidkaervej 27a, DK-5250 Odense SV, Denmark

Maximum rpm / Stroke

At longer strokes the speed has to be redueced according to the adjacent graphs.

Maximum rpm / Stroke

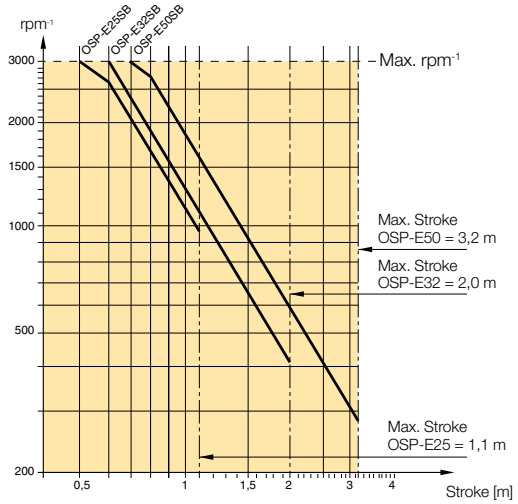

The maximum rpm shown in the graph, is 80% of the critical rpm.

Performance / Action Force

The performance to be expected depends on the maximum required actions force of the application.

An increase of the action force will lead to a reduced performance.

Performance as a function of the action force

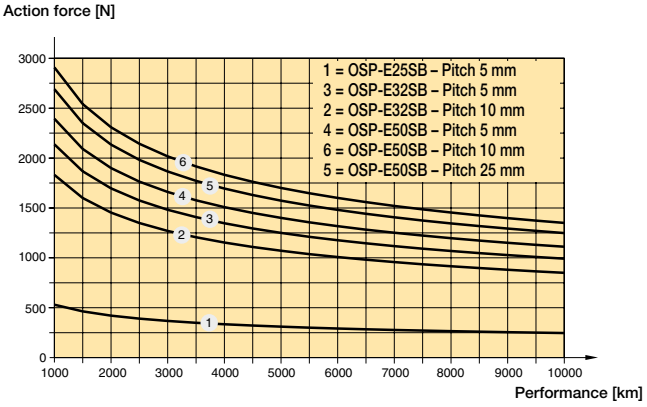

Distance / Time Graph

The adjacent graphs show travel distance and total time at maximum speed and recommended maximum acceleration. The graph assumes that acceleration and deceleration are equal.

Distance / Time Graph

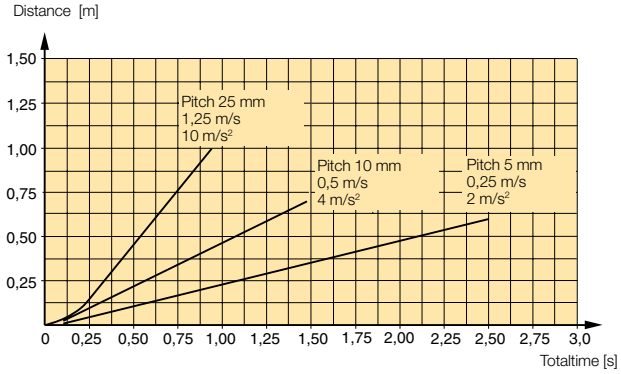

Tel: +45 63 12 83 00 | Email: ps@hymatik.com | www.hymatik.com | Hvidkaervej 27a, DK-5250 Odense SV, Denmark

Required Torque / Mass

Using the known mass, the direction of the application and the recommended acceleration, the actuator can be sized and the required torque is shown in the adjacent graphs.
Mass in graphs = Load + moving mass of the actuator according to the weight chart.

Please mind:
If an additional guide is used, mind the weight of the guide carriage.

Size OSP-E25SB, Pitch 5mm Acceleration 2 m/s²

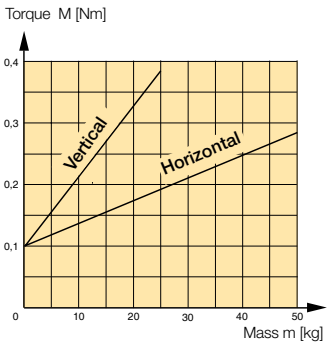

Size OSP-E32SB, Pitch 5mm Acceleration 2 m/s²

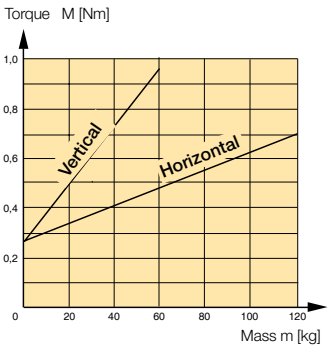

Size OSP-E32SB, Pitch 10mm Acceleration 4 m/s²

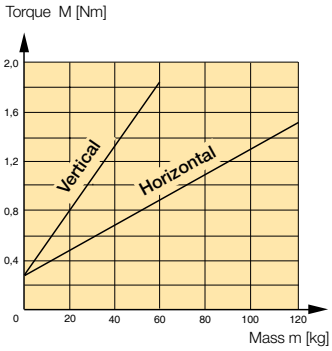

Size OSP-E50SB, Pitch 5mm Acceleration 2 m/s²

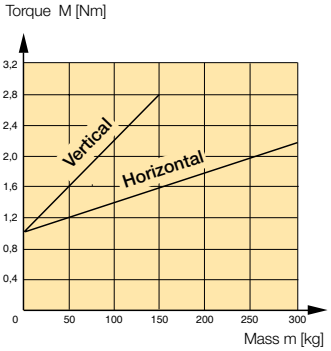

Size OSP-E50SB, Pitch 10mm Acceleration 4 m/s²

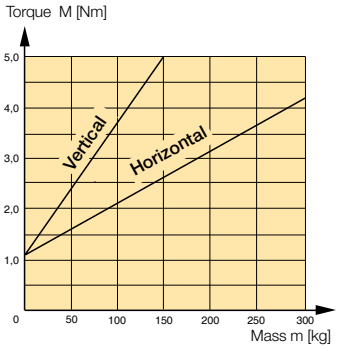

Size OSP-E50SB, Pitch 25mm Acceleration 10 m/s²

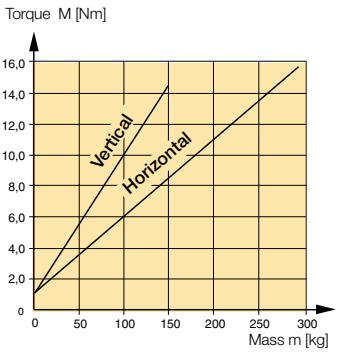

Trapezoidal screw actuator with internal plain bearing guide for intermittent applications

A completely new generation of actuators which can be integrated into any machine layout neatly and simply.

Advantages

- Accurate path and position control
- High force output
- Self-locking
- Excellent slow speed characteristics
- Easy installation
- Low maintenance
- Ideal for level regulation, lifting and other applications with intermittent operations

Features

- Integrated drive and guidance system
- Complete motor and control packages
- Diverse range of accessories and mountings
- Special options available

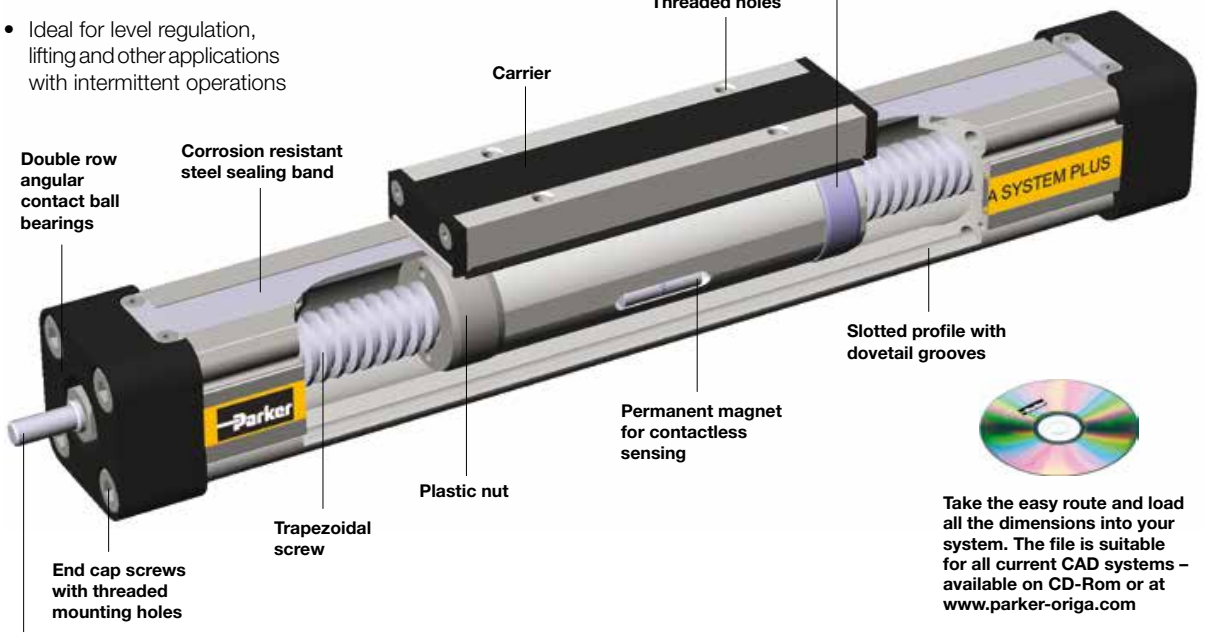

Take the easy route and load all the dimensions into your system. The file is suitable for all current CAD systems – available on CD-Rom or at www.parker-origa.com

The dovetailed mounting rails of the new actuator expand its function into that of a universal system carrier.
Modular system components are simply clamped on.

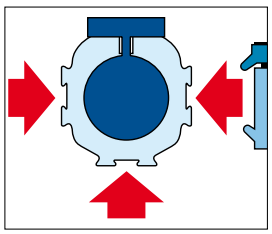

Heavy Duty guide
HD linear guides for heavy duty applications



SFI-plus
displacement measuring system



SLIDELINE
Combination with sliding guide for heavy-duty operation



POWERSLIDE
Roller bearing precision guidance for smooth travel and high dynamic or static loads.

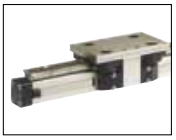

PROLINE
The compact aluminium roller guide for high loads and velocities.



Tel: +45 63 12 83 00 | Email: ps@hymatik.com | www.hymatik.com | Hvidkaervej 27a, DK-5250 Odense SV, Denmark

Trapezoidal Screw Actuator with Internal Plain Bearing Guide
Size 25, 32, 50
Type: OSP-E..ST



Standard Versions:
- Standard carrier with internal plain bearing guide
- Dovetail profile for mounting of accessories and the actuator itself
- Pitch of Trapezoidal Spindle:
  Type OSP-E25ST : 4 mm
  Type OSP-E32ST: 4 mm
  Type OSP-E50ST: 6 mm

Options:
- Displacement Measuring System SFI-plus
- Keyway

Installation Instructions
Use the threaded holes in the free end cap and a profile mounting close to the motor end for mounting the actuator.
See if profile mountings are needed using the maximum permissible unsupported length graph.
At least one end cap must be secured to prevent axial sliding when Profile Mounting is used.
When the actuator is moving an externally guided load, the compensation must be used.
The actuators can be fitted with the standard carrier mounting facing in any direction.
To prevent contamination such as fluid ingress, the drive should be fitted with its sealing band facing downwards.
The inversion mounting can be fitted to transfer the driving force to the opposite side.

Characteristics	Description
Series	OSP-E..ST
Mounting	See drawings
Ambient temperature range	-20 °C to +70 °C
Installation	In any position
Material	
Slotted Profile	Extruded anodized aluminium
Trapazoidal screw	Cold rolled steel
Drive nut	Thermoplastic polyester
Guide bearings	Low friction plastic
Sealing band	Hardened corrosion resistant steel
Screws, nuts	Zinc plated steel
Mountings	Zinc plated steel and aluminium

Weight (mass) and Inertia

Series	Weight (mass) [kg]			Inertia [x 10^{-6} kgm^2]	
	at stroke 0 m	ad per meter stroke	moving mass	at stroke 0 m	ad per meter stroke
OSP-E25ST	0.9	2.8	0.2	6	30
OSP-E32ST	2.1	5.0	0.5	21.7	81
OSP-E50ST	5.1	10.6	1.3	152	400

Maintenance
All moving parts are long-term lubricated for a normal operational environment. Parker Origa recommends a check and lubrication of the actuator, and if necessary a change of the belt and wear parts, after an operation time of 12 months of operation or 3000 km travel of distance.
Please refer to the operating instructions supplied with the drive

First service start-up
The maximum values specified in the technical data sheet for the different products must not be exceeded. Before taking the actuator as a machine into service, the user must ensure the adherence to the EC Machine Directive 2006/42/EG.

Tel: +45 63 12 83 00 | Email: ps@hymatik.com | www.hymatik.com | Hvidkaervej 27a, DK-5250 Odense SV, Denmark

Sizing Performance Overview Maximum Loadings

Sizing of Actuator

The following steps are recommended for selection :

1. Check that maximum values in the table T3 are not exceeded.
2. Check the maximum values in graph are not exceeded.
3. When sizing and specifying the motor, the RMS-average torque must be calculated using the cycle time of the application.
4. Check that the maximum allowable unsupported length is not exceeded

Performance Overview

Characteristics	Unit	Description		
Size		OSP-E25ST	OSP-E32ST	OSP-E50ST
Pitch	[mm]	4	4	6
Max. speed	[m/s]	0.1	0.1	0.15
Linear motion per revolution drive shaft	[mm]	4	4	6
Max. rpm, drive shaft	[min-1]	1500	1500	1500
Max. effective action force FA Corresponding torque on drive shaft	[N] [Nm]	600 1.35	1300 3.2	2 500 8.8
No-load torque	[Nm]	0.3	0.4	0.5
Max. allowable torque on drive shaft	[Nm]	1.55	4.0	9.4
Self-locking force FL1)	[N]	600	1300	2500
Repeatability	[mm/m]	±0.5	±0.5	±0.5
Max. Standard stroke length	[mm]	1100	2000	2500*

1) Related to screw types Tr 16x4, Tr 20x4, TR 30x6
* For strokes longer than 2000 mm in horizontal apllications, please contact our customer support.

Loads, Forces and Moments

Combined loads

If the actuator is subjected to several forces, loads and moments at the same time, the maximum load is calculated with the equation shown here.
The maximum permissible loads must not be exceeded.

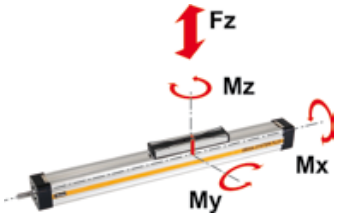

$M = F \cdot l$ [Nm]
$M_x = M_{x\,static} + M_{x\,dynamic}$
$M_y = M_{y\,static} + M_{y\,dynamic}$
$M_z = M_{z\,static} + M_{z\,dynamic}$

The distance l (lx, ly, lz) for calculation of the bending moments relates to the centre axis of the actuator.

Maximum Permissible Loads

T3

Size	Max. applied load [N] Fz	Max. moments [Nm] Mx	My	Mz
OSP-E25ST	500	2	24	7
OSP-E32ST	1000	6	65	12
OSP-E50ST	1500	13	155	26

Equation of Combined Loads

$$\frac{Fz}{Fz\ (max)} + \frac{Mx}{Mx\ (max)} + \frac{My}{My\ (max)} + \frac{Mz}{Mz\ (max)} \leq 1$$

The total of the loads must not exceed >1 under any circumstances.

Parker Hannifin Corporation
Pneumatic Division - Europe

Tel: +45 63 12 83 00 | Email: ps@hymatik.com | www.hymatik.com | Hvidkaervej 27a, DK-5250 Odense SV, Denmark

Maximum Permissible Unsupported Length

Stroke length

The stroke lengths of the actuators are available in multiples of 1 mm up to the following maximum stroke lengths.
OSP-E25ST: max. 1100 mm
OSP-E32ST: max. 2000 mm
OSP-E50ST: max. 2500 mm *
Other stroke lengths are available on request.

* For strokes longer than 2000 mm in horizontal applications, please contact our customer support

The end of stroke must not be used as a mechanical stop.
Allow an additional safety clearance of minimum 25 mm at both ends.
The use of an AC motor with frequency converter normally requires a larger safety clearance than that required for servo systems.
For advise, please contact your local Parker Origa technical support department.

Maximum Permissible Unsupported Length – Placing of Profile Mounting

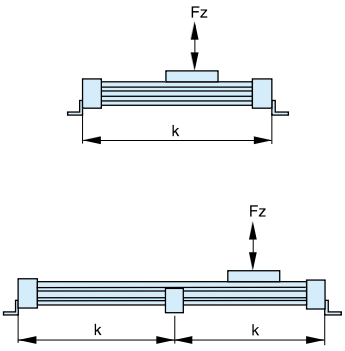

k = Maximum permissible distance between mountings/mid-section support for a given load F.

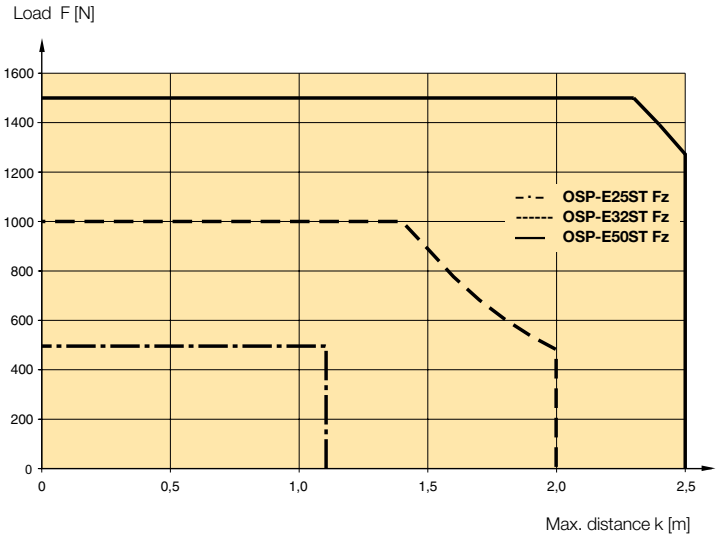

(Up to the curve in the above graph the deflection will be max. 0.2 % of distance k.)

Mounting on the Drive Shaft

Do not expose the drive shaft to uncontrolled axial or radial forces when mounting coupling or pulley, a steadying block should be used.

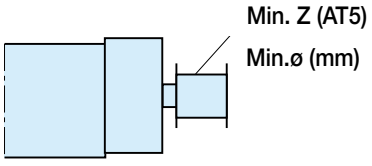

Pulleys

Minimum allowable number of teeth (AT5) and diameter of pulley at maximum applied torque.

Size	Min. Z	Min. ø
OSP-E25ST	24	38
OSP-E32ST	24	38
OSP-E50ST	36	57

Tel: +45 63 12 83 00 | Email: ps@hymatik.com | www.hymatik.com | Hvidkaervej 27a, DK-5250 Odense SV, Denmark

Maximum rpm / Stroke

At longer strokes the speed has to be redueced according to the adjacent graphs.

Maximum rpm / Stroke

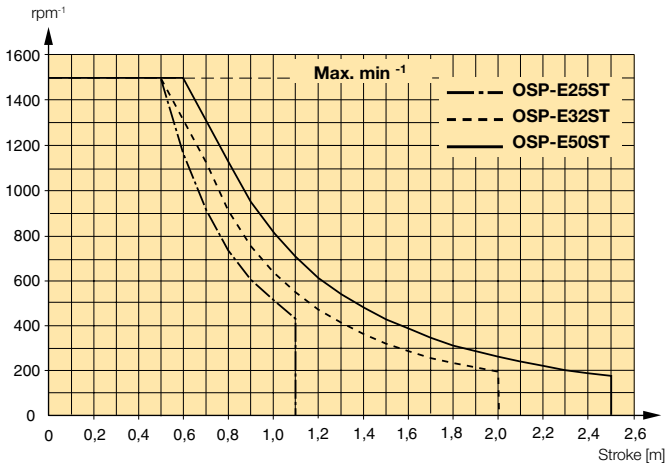

The maximum rpm shown in the graph, is 80% of the critical rpm.

Performance / Action Force

The actuators are designed for a 10% intermittent usage.

The performance to be expected depends on the maximum required actions force of the application.

An increase of the action force will lead to a reduced performance.

Performance as a function of the action force

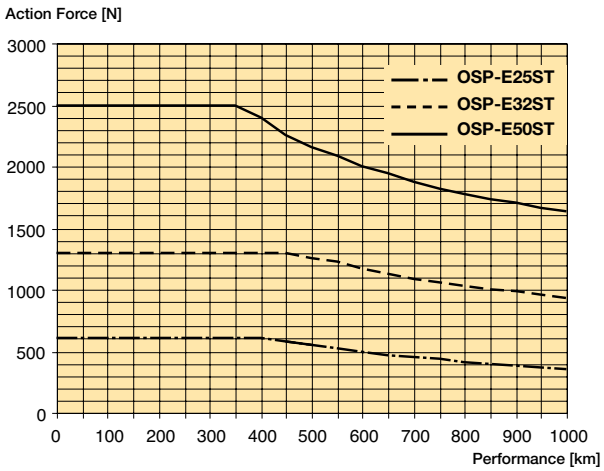

Note: Graph above is based upon 10% intermittent usage

Tel: +45 63 12 83 00 | Email: ps@hymatik.com | www.hymatik.com | Hvidkaervej 27a, DK-5250 Odense SV, Denmark

Ball screw actuator with internal plain bearing guide and piston rod for accurate piston rod applications

A completely new generation of actuators which can be integrated into any machine layout neatly and simply.

Advantages

- High output force
- Excellent running characteristics
- Accurate path and position control
- High levels of repeatability

Features

- Extending drive rod
- Ball screw spindle
- Non-rotating drive rod
- Continuous duty operation
- Large range of accessories

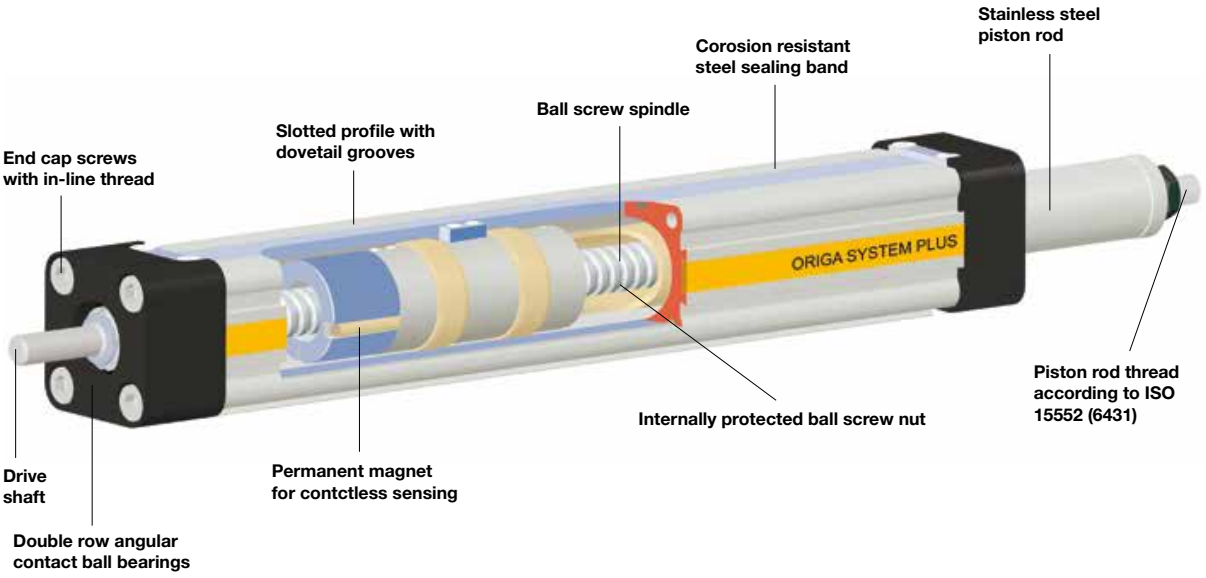

Take the easy route and load all the dimensions into your system. The file is suitable for all current CAD systems – available on CD-Rom or at www.parker-origa.com



Tel: +45 63 12 83 00 | Email: ps@hymatik.com | www.hymatik.com | Hvidkaervej 27a, DK-5250 Odense SV, Denmark

Options and Accessories

OSP-E..SBR
Ball screw actuator with internal plain bearing guide and piston rod

STANDARD VERSIONS
OSP-E..SBR

Standard piston rod with internal guidance and integrated magnet set for contactless position sensing. Dovetail profile for mounting of accessories and the actuator itself.



BALL SCREW PITCH

The ball screws spindles are available
in various pitches:
OSP-E25SBR: 5 mm
OSP-E32SBR: 5, 10 mm
OSP-E50SBR: 5, 10, 25 mm

ACCESSORIES

MOTOR MOUNTINGS



END CAP MOUNTING
For end-mounting the actuator on the extending rod side.



Flange Mounting C
For end-mounting the actuator on the extending rod side.



PROFILE MOUNTING
For mounting the actuator on the dovetail grooves and on the motor end.



Trunning mounting EN in combination with pivot mounting EL.
– steplessly adjustable in axial direction.



COMPENSATION
Piston Rod eye



Piston rod Clevis



Piston Rod compensating coupling
For compensating of radial and angular misaligments



MAGNETIC SWITCHES
SERIES RST AND EST
For contactless position sensing of end stop and intermediate carrier positions.



Ball Screw Actuator with Internal Plain Bearing Guide and Piston Rod
Size 25, 32, 50
Type: OSP-E..SBR



Standard Versions:
- Standard piston rod with internal plain bearing guide
- Pitches of Ball Screw Spindle:
  Type OSP-E25SBR: 5 mm
  Type OSP-E32SBR: 5, 10 mm
  Type OSP-E50SBR: 5, 10, 25 mm

Options:
- Keyway version

Installation Instructions
Use the threaded holes in the free end cap and a profile mounting close to the motor end for mounting the actuator.

The piston rod is locked against rotations, but must not be used for radial loads Mx, that need to be guided externally. A compensation part e. g. piston rod eye is recommended.

Characteristics	Description
Series	OSP-E..SBR
Mounting	See drawings
Ambient temperature range	-20 °C to +80 °C
Installation	In any position
Encapsulation class	IP 54
Material	
Slotted Profile	Extruded anodized aluminium
Ball screw	Steel
Ball nut	Steel
Piston rod	Stainless steel
Guide bearings	Low friction plastic
Sealing band	Hardened corrosion resistant steel
Screws, nuts	Zinc plated steel
Mountings	Zinc plated steel and aluminium

Weight (mass) and Inertia

Series	Total weight (Mass) [kg]		Moving mass [kg]		Inertia [x 10^{-6} kgm²]	
	At stroke 0 m	Actuator head	At stroke 0 m	Add per metre stroke	At Stroke 0 m	Add per metre stroke
OSP-E25SBR	0.7	3.0	0.2	0.9	1.2	11.3
OSP-E32SBR	1.7	5.6	0.6	1.8	5.9	32.0
OSP-E50SBR	4.5	10.8	1.1	2.6	50.0	225.0

Maintenance
All moving parts are long-term lubricated for a normal operational environment. Parker Origa recommends a check and lubrication of the actuator, and if necessary a change of wear parts, after an operation time of 12 months or 3000 km travel of distance. Please refer to the operating instructions supplied with the actuator.

First service start-up
The maximum values specified in the technical data sheet for the different products must not be exceeded. Before taking the actuator as a machine into service, the user must ensure the adherence to the EC Machine Directive 2006/42/EG.

Tel: +45 63 12 83 00 | Email: ps@hymatik.com | www.hymatik.com | Hvidkaervej 27a, DK-5250 Odense SV, Denmark

Sizing Performance Overview Maximum Loadings

Sizing of Actuator

The following steps are recommended for selection :

1. Check that the maximum values in the adjacent chart and transverse force/ stroke graph below are not exceeded.
2. Check the lifetime/travel distance in graph below.
3. When sizing and specifying the motor, the RMS-average torque must be calculated using the cycle time in application

Performance Overview

Characteristics	Unit	Description					
Series		OSP-E25SBR	OSP-E32SBR		OSP-E50SBR		
Pitch	[mm]	5	5	10	5	10	25
Max. speed	[m/s]	0.25	0.25	0.5	0.25	0.5	1.25
Linear motion per revolution drive shaft	[mm]	5	5	10	5	10	25
Max. rpm drive shaft		[min^{-1}]	3000	3000	3000		
Max. effective action force F_A	[N]	260	900		1200		
Corresponding torque drive shaft	[Nm]	0.45	1.1	1.8	1.3	2.8	6.0
No-load torque	[Nm]	0.2	0.2	0.3	0.3	0.4	0.5
Max. allowable torque on drive shaft	[Nm]	0.6	1.5	2.8	4.2	7.5	20
Max. allowable acceleration	[m/s^2]	5	5		5		
Typical repeatability	[mm/m]	±0.05	±0.05		±0.05		
Max.Standard stroke length	[mm]	500	500		500		

Transverse Force / Stroke

The permissible transverse force is reduced with increasing stroke length. according to the adjacent graphs.

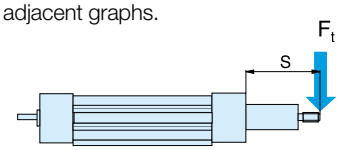

Transverse Force / Stroke

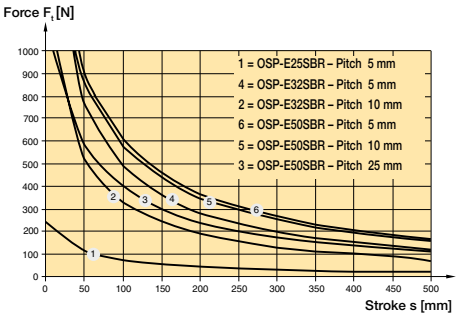

Maximum rpm / Stroke

At longer strokes the speed has to be redueced according to the adjacent graphs.

Maximum rpm / Stroke

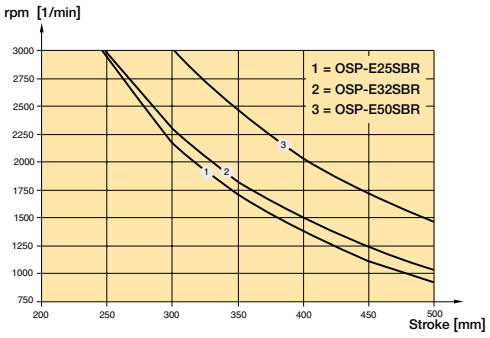

Performance / Action Force

The performance to be expected depends on the maximum required actions force of the application.

An increase of the action force will lead to a reduced performance.

Performance as a function of the action force

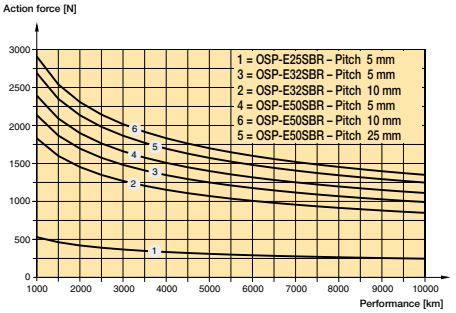

Tel: +45 63 12 83 00 | Email: ps@hymatik.com | www.hymatik.com | Hvidkaervej 27a, DK-5250 Odense SV, Denmark

Trapezoidal screw actuator with internal plain bearing guide and piston rod for intermittent applications

A completely new generation of actuators which can be integrated into any machine layout neatly and simply.

Advantages

- Accurate path and position control
- High force output
- Self-locking
- Excellent slow speed characteristics
- Easy installation
- Low maintenance
- Ideal for level regulation, lifting and other applications with intermittent operations

Features

- Piston rod-end dimensions conforming to ISO pneumatic standards
- Complete motor and control packages
- Diverse range of accessories and mountings
- Special options available

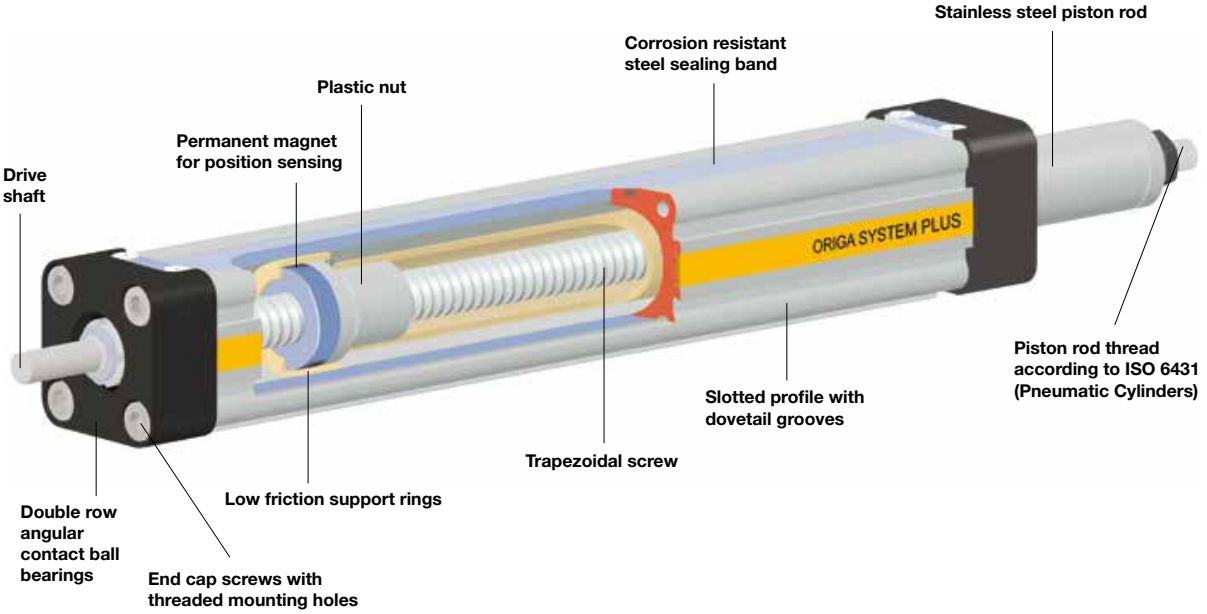

Take the easy route and load all the dimensions into your system. The file is suitable for all current CAD systems – available on CD-Rom or at www.parker-origa.com



Options and Accessories

OSP-E..STR
Trapezoidal screw actuator with internal plain bearing guide and piston rod

STANDARD VERSIONS OSP-E..STR

Standard piston rod with internal guidance and integrated magnet set for contactless position sensing. Dovetail profile for mounting of accessories and the actuator itself.



ACCESSORIES

MOTOR MOUNTINGS



END CAP MOUNTING
For end-mounting the actuator on the extending rod side.



FLANGE MOUNTING C
For end-mounting the actuator on the extending rod side.



PROFILE MOUNTING
For mounting the actuator on the dovetail grooves and on the motor end.



TRUNNING MOUNTING EN in combination with pivot mounting EL.
– steplessly adjustable in axial direction.

COMPENSATION PISTON ROD EYE



PISTON ROD CLEVIS



PISTON ROD COMPENSATING COUPLING
For compensating of radial and angular misaligments



MAGNETIC SWITCHES SERIES RST AND EST
For contactless position sensing of end stop and intermediate carrier positions.



Parker Hannifin Corporation
Pneumatic Division - Europe

Tel: +45 63 12 83 00 | Email: ps@hymatik.com | www.hymatik.com | Hvidkaervej 27a, DK-5250 Odense SV, Denmark

Trapezoidal Screw Actuator with Internal Plain Bearing Guide and Piston rod

Size 25, 32, 50

Type: OSP-E..STR



Standard Versions:

- Dovetail profile for mounting of accessories and the actuator itself
- Pitch of Trapezoidal Spindle:
  Type OSP-E25STR : 3 mm
  Type OSP-E32STR: 4 mm
  Type OSP-E50STR: 5 mm

Contactless position sensing

Please use the magnetic switch mentioned below:

KL3096 (Type RS-K, normaly closed, Reed-contact, with cable)
KL3098 (Type ES-S, Magnetic electronic, PNP-switch with DIN-plug)

Installation Instructions

Use the threaded holes in the free end cap and a profile mounting close to the motor end for mounting the actuator.

The piston rod is not locked against rotation and needs to be guided externally. A compensation part e. g. piston rod eye is recommended.

Characteristics	Description
Series	OSP-E..STR
Mounting	See drawings
Ambient temperature range	-20 °C to +70 °C
Installation	In any position
Encapsulation class	IP 54
Material	
Slotted Profile	Extruded anodized aluminium
Trapazoidal screw	Cold rolled steel
Drive nut	Thermoplastic polyester
Piston rod	Stainless steel
Guide bearings	Low friction plastic
Sealing band	Hardened corrosion resistant steel
Screws, nuts	Zinc plated steel
Mountings	Zinc plated steel and aluminium

Weight (mass) and Inertia

Series	Total weight (Mass) [kg]		Moving mass [kg]		Inertia [x 10^{-6} kgm²]	
	At stroke 0 m	Actuator head	At stroke 0 m	Add per metre stroke	At Stroke 0 m	Add per metre stroke
OSP-E25STR	0.4	2.9	0.1	0.7	1.1	10.3
OSP-E32STR	0.9	5.4	0.2	1.2	3.9	29.6
OSP-E50STR	2.4	10.6	0.8	1.6	24.6	150

Maintenance

All moving parts are long-term lubricated for a normal operational environment. Parker Origa recommends a check and lubrication of the actuator, and if necessary a change of wear parts, after an operation time of 12 months or 3000 km travel of distance. Please refer to the operating instructions supplied with the actuator.

First service start-up

The maximum values specified in the technical data sheet for the different products must not be exceeded. Before taking the actuator as a machine into service, the user must ensure the adherence to the EC Machine Directive 2006/42/EG.

Tel: +45 63 12 83 00 | Email: ps@hymatik.com | www.hymatik.com | Hvidkaervej 27a, DK-5250 Odense SV, Denmark

Sizing Performance Overview Maximum Loadings

Sizing of Actuator

The following steps are recommended for selection :

1. Check that the maximum values in the adjacent chart and transverse force/ stroke graph below are not exceeded.
2. Check the lifetime/travel distance in graph below.
3. When sizing and specifying the motor, the RMS-average torque must be calculated using the cycle time in application

Performance Overview

Characteristics	Unit	Description		
Size		OSP-E25STR	OSP-E32STR	OSP-E50STR
Pitch	[mm]	3	4	5
Max. speed	[m/s]	0.075	0.1	0.125
Linear motion per revolution, drive shaft	[mm]	3	4	5
Max. rpm, drive shaft	[min^{-1}]	1500 [2)]	1500	1500
Max. effective action force F_A Corresponding torque on drive shaft	[N] [Nm]	800 1.35	1600 3.4	3300 9.25
No-load torque	[Nm]	0.3	0.4	0.5
Max. allowable torque on drive shaft	[Nm]	1.7	4.4	12
Self-locking force F_L [1)]	[N]	800	1600	3300
Typical repeatability	[mm/m]	±0,5	±0,5	±0,5
Max.Standard stroke length	[mm]	500	500	500

[1)] Related to screw types Tr 12x3, Tr 16x4, Tr 24x5

[2)] from 0,4 m stroke max. 1200 min-1 permissible

Transverse Force / Stroke

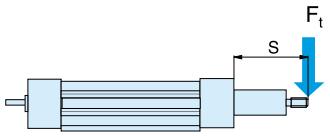

Transverse Force / Stroke

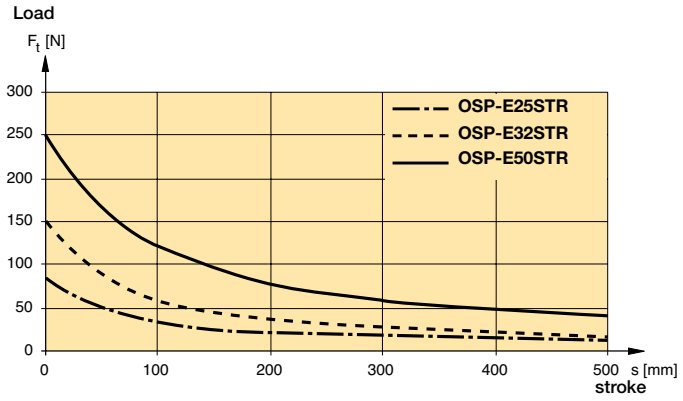

The graph is based upon 10% intermittent usage

Performance / Action Force

The Actuators are designed for a 10% intermittent usage.
The performance to be expected depends on the maximum required actions force of the application.
An increase of the action force will lead to a reduced performance.

Performance as a function of the action force

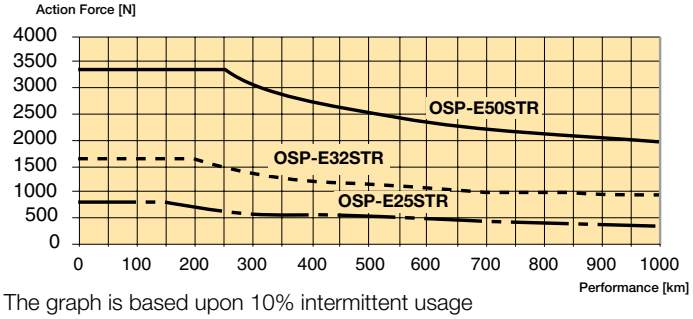

The graph is based upon 10% intermittent usage

Tel: +45 63 12 83 00 | Email: ps@hymatik.com | www.hymatik.com | Hvidkaervej 27a, DK-5250 Odense SV, Denmark




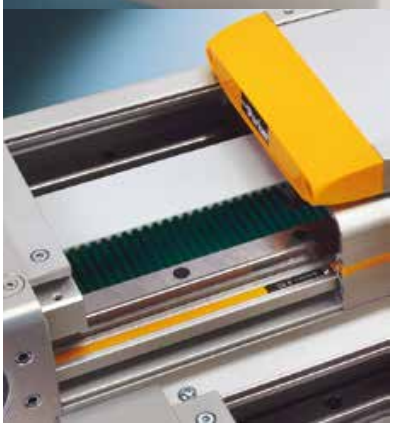

ORIGA HMR

High Moment Rodless Electric Linear Actuators - Two Drive Technologies: Screw & Toothed Belt



Driving the future

The HMR linear drive system can be equipped with a “basic” or “reinforced” profile as standard. The “basic” profile is suitable for fitting directly to a machine base that has a corresponding support surface. The “reinforced” profile, on the other hand, is the preferred choice for self-supporting systems or for use in conjunction with a base surface offering limited support.

- Two alternative drive technologies in one profile
- Unique flexibility and reliability
- High speed and precision
- Two profile versions
- Optional IP54 snap-in covers

Tel: +45 63 12 83 00 | Email: ps@hymatik.com | www.hymatik.com | Hvidkaervej 27a, DK-5250 Odense SV, Denmark

ORIGA HMR Electromechanical Linear Actuators

We drive the future - with screw, toothed belt.



Profile designs
- Basic profile for assembling directly to the machine base
- Reinforced profile for self-supporting assembly



Mounting systems
- Integrated T-slots for attaching from below and from the side



Protection classes
- Without cover: IP20
- With cover: IP54



Guide systems
- Plain bearing guide
- Recirculating ball bearing guide



Lubrication
- Central lubrication via externally accessible lubricating nippels



Position sensing
- Integrated, adjustable position switch for end positions and homing



Impact protection
- Integrated shock absorbers for both end positions



Distance measurement
- Contact-free, incremental displacement measuring system



Brake system
- Holding brake can be implemented for horizontal and vertical movements



Cable drag chains
- Directly attachable drag chains for various cabling

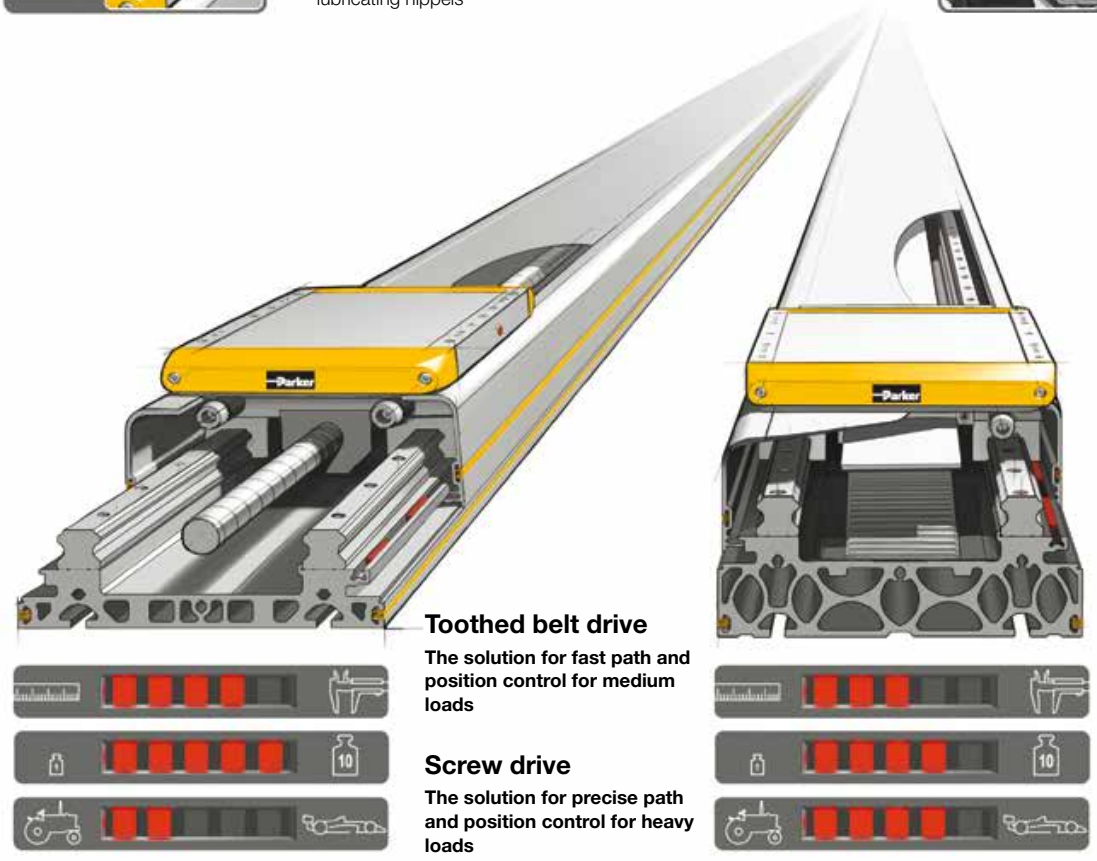

Toothed belt drive
The solution for fast path and position control for medium loads

Screw drive
The solution for precise path and position control for heavy loads

Origa Linear Drives

Sizes 85, 110,150, 180, 240 mm

HMR Series

Profile designs

- Basic
- Reinforced

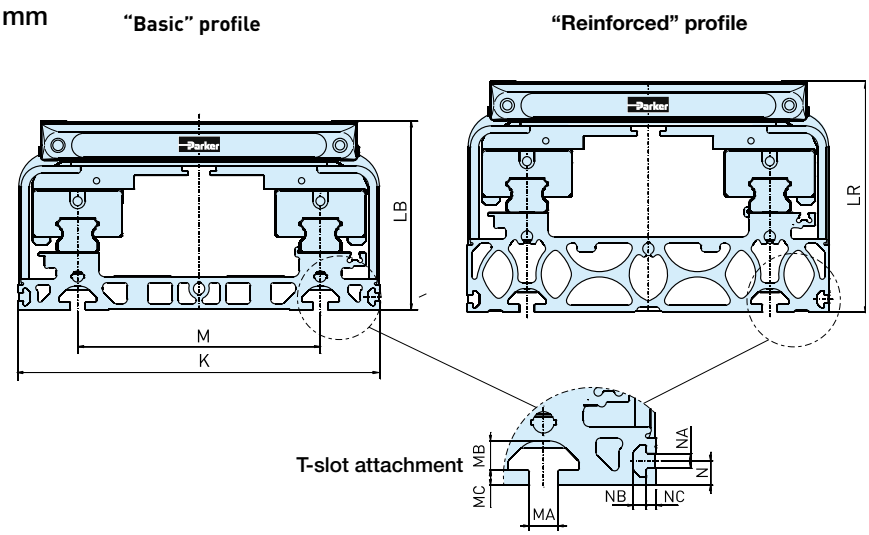

The HMR linear drive system can be equipped with a "basic" or "reinforced" profile as standard. The "basic" profile is suitable for fitting directly to a machine base that has a corresponding support surface. The "reinforced" profile, on the other hand, is the preferred choice for self-supporting systems or for use in conjunction with a base surface offering limited support.

Dimensions (mm) - Profil design HMR

Size	K	LB	LR	M	MA	MB	MC	N	NA	NB	NC
HMRx085	85.0	60.0	71.0	50.0	5.2	4.5	1.5	4.5	3.4	3.0	2.5
HMRx110	110.0	69.5	89.5	70.0	5.2	4.5	1.8	4.5	3.4	3.0	2.5
HMRx150	150.0	90.0	114.0	96.0	6.2	6.8	3.0	6.5	5.2	4.6	3.5
HMRx180	180.0	111.5	134.5	116.0	8.0	7.8	4.5	8.5	5.2	4.5	3.5
HMRx240	240.0	125.0	153.0	161.0	10.0	10.2	5.3	8.5	5.2	4.5	3.5

Tel: +45 63 12 83 00 | Email: ps@hymatik.com | www.hymatik.com | Hvidkaervej 27a, DK-5250 Odense SV, Denmark

Origa Linear Drives

Sizes 85, 110,150, 180, 240 mm

HMR Series

Ball Bearing Guide

The occurring loads, forces and bending moments depend on the application. The mass of the construction attached to the carriage has a center of gravity.
This mass creates static forces (F = m · g) and bending moments (M = m · g · l).

Additional dynamic moments (M = m · a · l) arise in dependence of the acceleration during travel.
Care should be taken when selecting suitable guides that the permissible sum of loads does not exceed 1.

Loads, Forces and Moments

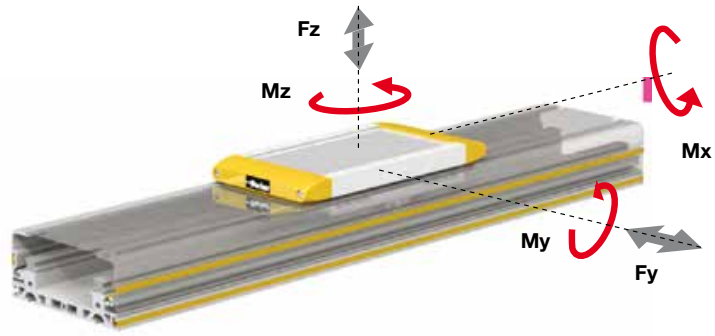

Combined loads

The maximum permissible load for linear drives subject to simultaneous multiple loads, forces and bending moments are calculated using the formula below. Maximum permissible loads must not be exceeded.

$$L = \frac{Fy}{Fy_{(max)}} + \frac{Fz}{Fz_{(max)}} + \frac{Mx}{Mx_{(max)}} + \frac{My}{My_{(max)}} + \frac{Mz}{Mz_{(max)}} \leq 1$$

The sum of all loads must under no circumstance be > 1.

Internal lever arm l_{zi}

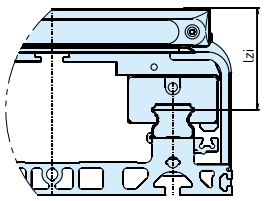

Dimension table - l_{zi}

Product size		l_{zi}
HMR-085	[mm]	33.0
HMR-110	[mm]	39.5
HMR-150	[mm]	50.0
HMR-180	[mm]	57.5
HMR-240	[mm]	68.0

Maximum permissible loads based on a performance of 2,540 km

Product Size		HMRx08	HMRx11	HMRx15	HMRx18	HMRx24	HMRx08	HMRx11	HMRx15	HMRx18	HMRx24
Carriage		Standard					Tandem				
Max. permissible load											
F_{z2540} F_{y2540}	[N]	1,800	4,450	8,800	16,200	26,600	2,700	6,700	13,200	24,300	39,900
Max. permissible bending moment											
M_{x2540}	[Nm]	45	155	430	940	2,150	68	235	645	1,410	3,225
M_{y2540} M_{z2540}	[Nm]	80	200	560	1,230	2,430	120	300	840	1,845	3,645

Maximum permissible loads based on a performance of 8,000 km

Product Size		HMRx08	HMRx11	HMRx15	HMRx18	HMRx24	HMRx08	HMRx11	HMRx15	HMRx18	HMRx24
Carriage		Standard					Tandem				
Max. permissible load											
F_{z8000} F_{y8000}	[N]	1,250	3,000	6,000	11,000	18,200	1,875	4,500	9,000	16,500	27,300
Max. permissible bending moment											
M_{x8000}	[Nm]	30	105	290	640	1,460	45	160	435	960	2,190
M_{y8000} M_{z8000}	[Nm]	55	135	380	840	1,660	80	205	570	1,260	2,490

Tel: +45 63 12 83 00 | Email: ps@hymatik.com | www.hymatik.com | Hvidkaervej 27a, DK-5250 Odense SV, Denmark

Ball Screw

Sizes 85, 110,150, 180, 240 mm

HMRS Series



Technical Data HMRS

Product Size			HMRS08		HMRS11		HMRS15		HMRS18		HMRS24	
Type of Screw			12 x 5	12 x 12	16 x 5	16 x 16	20 x 5	20 x 20	25 x 10	25 x 25	32 x 10	32 x 32
Pitch	p	[mm]	5	12	5	16	5	20	10	25	10	32
Max. speed	$v_{max.}$	[m/s]	0.25	0.60	0.25	0.80	0.25	1.00	0.50	1.25	0.50	1.60
Max. acceleration	$a_{max.}$	[m/s^2]	10		10		10		10		10	
Repeatability		[µm]	± 20		± 20		± 20		± 20		± 20	
Max. stroke		[mm]	1,200		1,500		2,500		3,400		4,000	
Thrust force and torque												
Max. thrust force	F_{Amax}	[N]	820	820	2,200	2,200	2,600	2,600	4,800	4,800	5,500	5,500
	F_{A2540}	[N]	820	650	1,550	1,150	1,800	2,160	3,300	3,960	3,500	4,880
Max. torque at drive shaft	M_{Amax}	[Nm]	0.7	1.7	1.9	6.1	2.2	9.0	8.3	20.8	9.5	30.4
	M_{A2540}	[Nm]	0.7	1.3	1.3	3.1	1.6	7.5	5.7	17.1	6.1	27.0
No load torque	M_0	[Nm]	0.2	0.2	0.3	0.4	0.7	0.9	0.9	1.0	1.0	1.1
Stroke dependent on speed												
	200	[mm]	250	600	250	800	250	1,000	500	1,250	500	1,600
	400	[mm]	250	600	250	800	250	1,000	500	1,250	500	1,600
	600	[mm]	152	366	197	631	250	1,000	500	1,250	500	1,600
	800	[mm]	102	245	132	424	169	678	382	956	423	1,354
	1000	[mm]	73	176	95	304	122	486	277	694	312	997
	1200	[mm]	55	132	71	228	91	366	211	526	239	765
	1400	[mm]	-	-	56	178	71	285	165	413	189	605
	1600	[mm]	-	-	45	143	57	228	133	333	153	491
	1800	[mm]	-	-	-	-	47	187	109	274	127	406
	2000	[mm]	-	-	-	-	39	156	92	229	107	342
	2200	[mm]	-	-	-	-	33	132	78	195	91	291
	2400	[mm]	-	-	-	-	28	113	67	167	79	251
	2600	[mm]	-	-	-	-	-	-	58	145	68	219
	2800	[mm]	-	-	-	-	-	-	51	128	60	193
	3000	[mm]	-	-	-	-	-	-	45	113	53	171
	3200	[mm]	-	-	-	-	-	-	40	100	48	152
	3400	[mm]	-	-	-	-	-	-	-	-	43	137
	3600	[mm]	-	-	-	-	-	-	-	-	39	123
	3800	[mm]	-	-	-	-	-	-	-	-	35	112
	4000	[mm]	-	-	-	-	-	-	-	-	32	102

Tel: +45 63 12 83 00 | Email: ps@hymatik.com | www.hymatik.com | Hvidkaervej 27a, DK-5250 Odense SV, Denmark

Ball Screw

Sizes 85, 110,150, 180, 240 mm

HMRS Series

Performance expectancy depends on the application's required force.
An increase in force will reduce performance.

Performance / thrust force

HMRS08 Performance / Thrust force

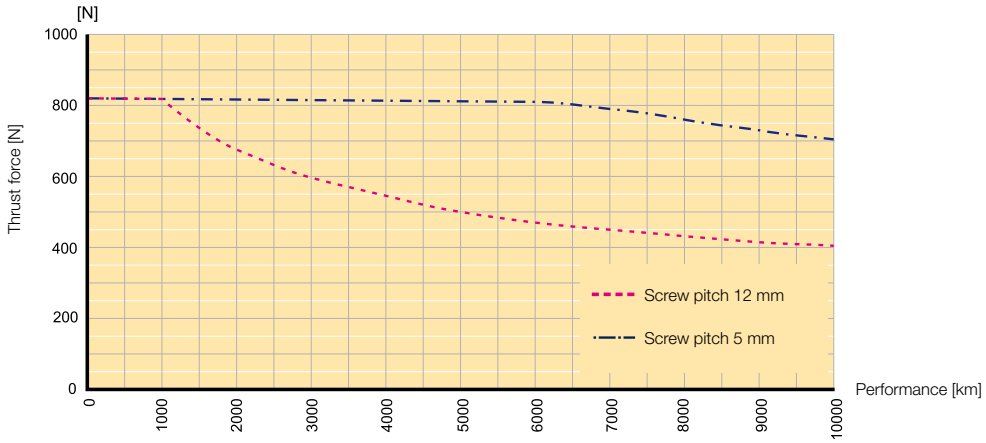

HMRS11 Performance / Thrust force

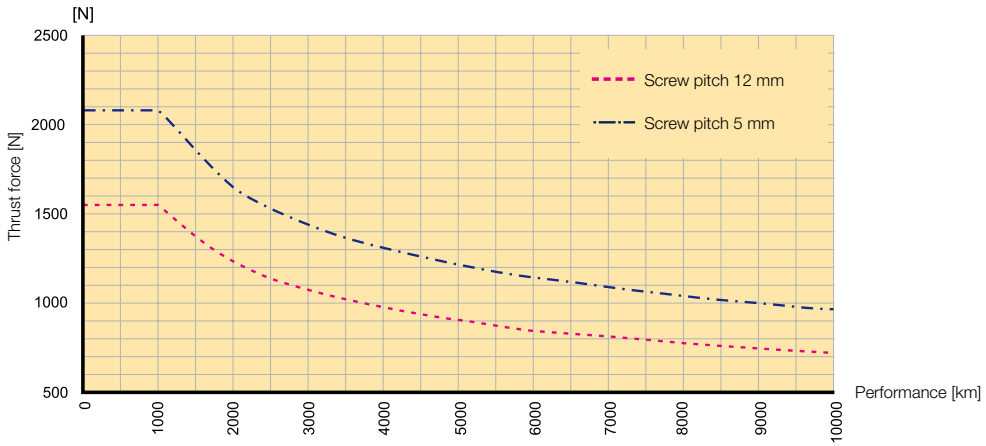

HMRS15 Performance / Thrust force

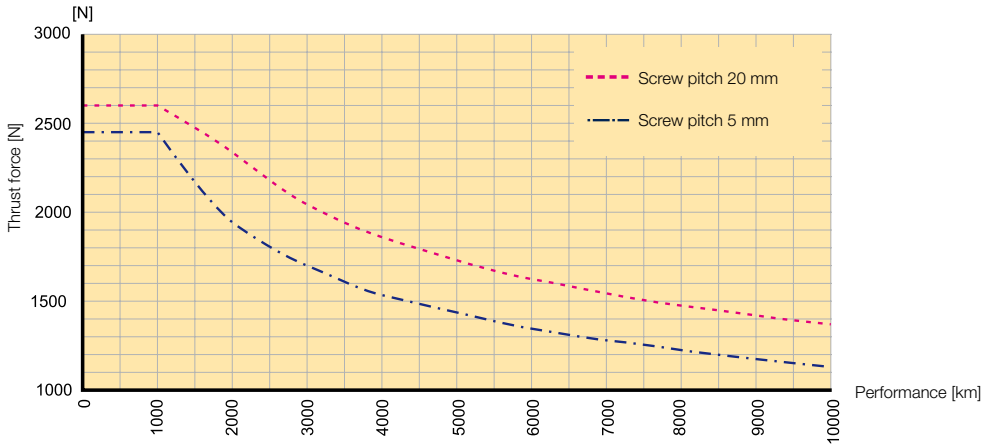

Tel: +45 63 12 83 00 | Email: ps@hymatik.com | www.hymatik.com | Hvidkaervej 27a, DK-5250 Odense SV, Denmark

Ball Screw

Sizes 85, 110,150, 180, 240 mm

HMRS Series

Performance expectancy depends on the application's required force.
An increase in force will reduce performance.

Performance / thrust force

HMRS18 Performance / Thrust force

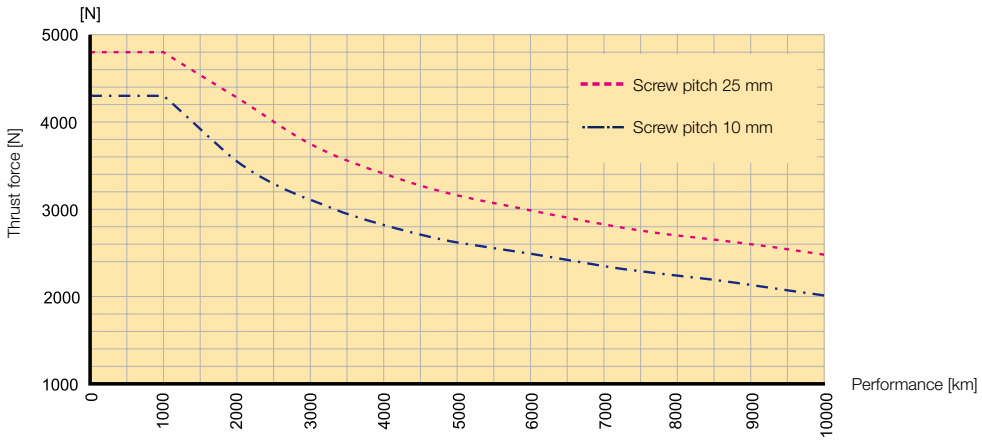

HMRS24 Performance / Thrust force

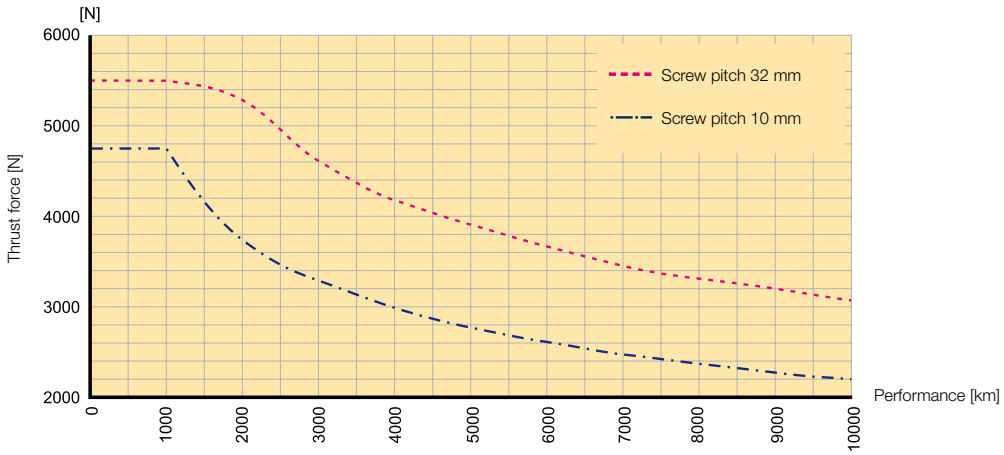

Belt Drive

Sizes 85, 110,150, 180, 240 mm

HMRB Series



Description Motor mounting position

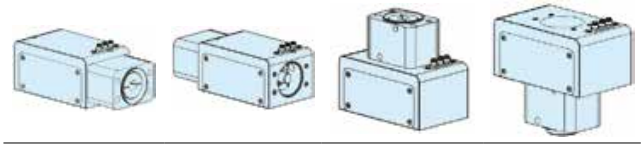

horizontal	upright
090° / 270°	000° / 180°
BD, DD	AP, CP, AD, CD

Type and orientation of the belt is given by the motor mounting position.

Technical Data HMRB

Production size			**HMRB08**		**HMRB11**		**HMRB15**	
Motor mounting position			090°/270°	000°/180°	090°/270°	000°/180°	090°/270°	000°/180°
Lead constant	$s_{lin.}$	[mm]	66	66	90	90	100	125
Max. speed	$v_{max.}$	[m/s]	2				5	
Max. acceleration	$a_{max.}$	[m/s²]	30				50	
Repeatability		[µm]	±50					
Max. order stroke		[mm]	3,000		4,000		6,000	
Thrust force and torque								
Max. thrust force	$F_{Amax.}$	[N]	295	295	630	630	1,050	630
Max. torque on drive shaft	$M_{Amax.}$	[Nm]	3.1	3.1	9.0	9.0	17.0	13.0
No load torque	M_0	[Nm]	1.0	1.0	1.2	1.2	1.2	1.2

Production size			**HMRB18**		**HMRB24**	
Motor mounting position			090°/270°	000°/180°	090°/270°	000°/180°
Lead constant	$s_{lin.}$	[mm]	130	150	160	224
Max. speed	$v_{max.}$	[m/s]	5			
Max. acceleration	$a_{max.}$	[m/s²]	50			
Repeatability		[µm]	±50			
Max. order stroke		[mm]	6,000			
Thrust force and torque						
Max. thrust force	$F_{Amax.}$	N	1,300	1,000	4,000	3,750
Max. torque on drive shaft	$M_{Amax.}$	Nm	27	24	101	134
No load torque	M_0	Nm	2.0	2.0	4.0	4.0

Tel: +45 63 12 83 00 | Email: ps@hymatik.com | www.hymatik.com | Hvidkaervej 27a, DK-5250 Odense SV, Denmark

Belt Drive

Sizes 85, 110,150, 180, 240 mm

HMRB Series

The permissible thrust force from the table is depending on speed level and order stroke length.

The minimum thrust force value must not be exceeded in the application.

Information:
Limiting the torque from the motor may avoid exceeding permitted thrust force.

HMRB thrust force

Product size			**HMRB08**		**HMRB11**		**HMRB15**		**HMRB18**		**HMRB24**	
Motor mounting position			090° / 270°	000° / 180°	090° / 270°	000° / 180°	090° / 270°	000° / 180°	090° / 270°	000° / 180°	090° / 270°	000° / 180°
Thrust force F_A corresponding to speed v	$F_{A(v<1\ m/s)}$	[N]	295	295	630	630	1,050	630	1,300	1,000	4,000	3,750
	$F_{A(v<2\ m/s)}$	[N]	295	295	550	550	990	630	1,300	1,000	4,000	3,380
	$F_{A(v<3\ m/s)}$	[N]	-	-	-	-	930	630	1,300	1,000	3,650	3,140
	$F_{A(v<4\ m/s)}$	[N]	-	-	-	-	890	630	1,300	1,000	3,370	2,950
	$F_{A(v<5\ m/s)}$	[N]	-	-	-	-	840	630	1,300	1,000	3,200	2,800
Thrust force F_A corresponding to order stroke length OS	$F_{A(OS<1000\ mm)}$	[N]	250	250	630	630	1,050	630	1,300	1,000	4,000	3,750
	$F_{A(OS<2000\ mm)}$	[N]	140	140	550	550	820	490	1,000	775	4,000	3,360
	$F_{A(OS<3000\ mm)}$	[N]	100	100	385	385	570	340	710	550	3,370	2,440
	$F_{A(OS<4000\ mm)}$	[N]	-	-	295	295	445	265	550	430	2,860	1,880
	$F_{A(OS<5000\ mm)}$	[N]	-	-	-	-	365	215	450	350	2,350	1,540
	$F_{A(OS<6000\ mm)}$	[N]	-	-	-	-	305	185	380	295	2,000	1,300

Example:

HMRB18 with motor mounting position 1 (090° front), speed v = 2 m/s (F_A = 1,300 N) and order stroke length OS = 2,500 mm (F_A = 710 N).
The maximum permissible thrust force F_A = 710 N must not be exceeded.

Tel: +45 63 12 83 00 | Email: ps@hymatik.com | www.hymatik.com | Hvidkaervej 27a, DK-5250 Odense SV, Denmark

Protection Class

HMR Series

Standard - without cover

IP54 - with cover

HMR was developed for various environment conditions. HMR can be equipped with a cover to comply with IP54 protection class if a higher rating is required.

Version - Standard



Version - Protected Class IP54



Impact Protection

HMR Series

HMR can be equipped with impact protection. The mounted structure shock absorbers can compensate the energy released by unintentional impact and afford protection against mechanical damage.

Two structure shock absorbers are fitted to each side of the carriage prior to delivery.



Shock absorbers for impact protection

Product size	HMRx08	HMRx11	HMRx15	HMRx18	HMRx24
Shock absorber	TA12-5	TA12-5	TA12-5	TA17-7	TA17-7
Energy absorption	3.0 Nm	3.0 Nm	3.0 Nm	8.5 Nm	8.5 Nm
Maximum stroke	5.0 mm	5.0 mm	5.0 mm	7.0 mm	7.0 mm



Distance-force and energy-distance characteristic curve (dynamic) – production size HMR-145

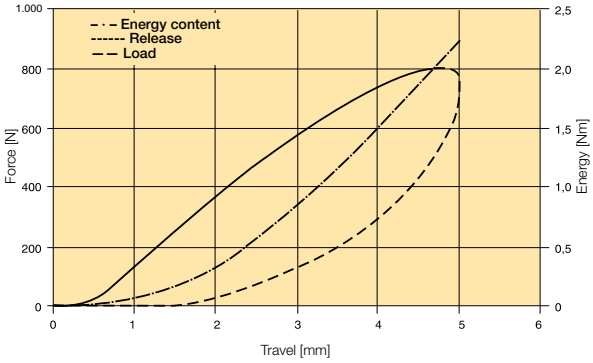

Distance-force and energy-distance characteristic curve (dynamic) – production size HMR-175, HMR-225

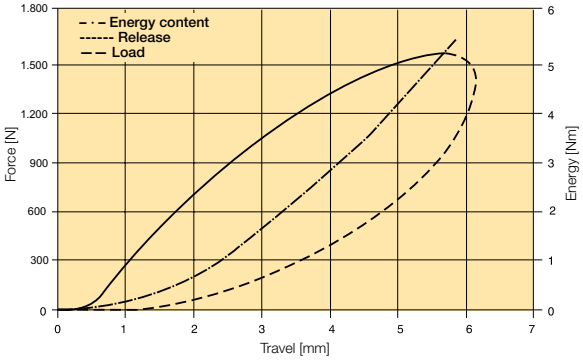

Tel: +45 63 12 83 00 | Email: ps@hymatik.com | www.hymatik.com | Hvidkaervej 27a, DK-5250 Odense SV, Denmark

Notes

Tel: +45 63 12 83 00 | Email: ps@hymatik.com | www.hymatik.com | Hvidkaervej 27a, DK-5250 Odense SV, Denmark











Valves

Choice of components for air supply to cylinders

In the chart below can you find the suitable valves, tubes etc. for each cylinder size. If you have a tube length over 2 m, choose one tube size larger than in the chart. The table is based on a maximum cylinder speed of 0,5m/s.

Following data is valid:
Supply pressure: min 7,0 bar
Regulator pressure setting: 6,0 bar
Pipe length between air treatment unit and valve: max 1 m
Pipe length between valve and cylinder : max 2 m
The table is made for a cylinder speed max 0,5 m/s

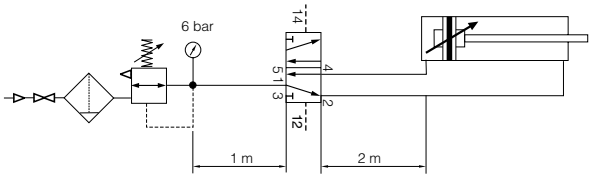

Cylinder														
Cylinder diameter mm	Ø10	Ø12	Ø16	Ø20	Ø25	Ø32	Ø40	Ø50	Ø63	Ø80	Ø100	Ø125	Ø160	Ø200
Cylinder ISO connection	M5	M5	M5	G1/8	G1/8	G1/8	G1/4	G1/4	G3/8	G3/8	G1/2	G1/2	G3/4	G3/4
Tube														
Tube diameter mm Ext / Int	4 / 2.7	4 / 2.7	4 / 2.7	6 / 4	6 / 4	6 / 4	8 / 6	8 / 6 10 / 8	10 / 8	12 / 9 14 / 11	12 / 9	16 / 13	18 / 15	22 / 16
FRL units														
Global P31														
Global P32														
Global P33														
Valves														
4mm inst. fitting valve														
M5 valve														
6mm inst. fitting valve														
1/8 valve														
1/4 valve														
3/8 valve														
1/2 valve														

Possible Recommended Cylinder speed < 0,5 m/s Not recommended

Parker Hannifin Corporation
Pneumatic Division - Europe

Tel: +45 63 12 83 00 | Email: ps@hymatik.com | www.hymatik.com | Hvidkaervej 27a, DK-5250 Odense SV, Denmark







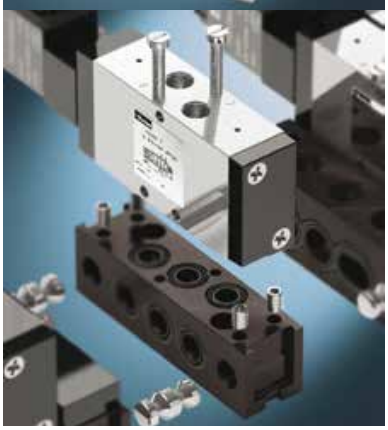

Viking Lite

rust and corrosion resistant, high reliability with flexible installation



Rust and corrosion resistant designs.
Viking Lite valves are made of anodized aluminium, for good corrosion resistance. The smooth design, with no dirt-collecting pockets, makes the valve suitable for most environments.

High reliability
Viking Lite valves easily comply with the requirements for the component reliability in accordance with EU Machinery Directive standards EN292-2 and EN983. The valves are designed for use with or without supplementary lubrication.

Compact installation dimensions - flexible installation
Compact dimensions direct body porting and integral mounting holes are all features of the Viking Lite range. In addition to single valve installation, the Viking Lite valves may be installed on manifolds so that the valves have a common supply and manifolded exhausts.

The Viking Lite valve range is robust, versatile and combines high performance with compact installation dimensions. Large flow capacity, short change-over times and low change-over pressure are important characteristics of this valve range.

Designed to operate with pressures up to 10 bar in temperatures -10°C to + 50°C.



- 3 sizes: G1/8, G1/4 and G3/8.
- Large flow capacity with short change-over times.
- Low change over pressure.
- Dynamic bi-directional spool seals.
- Do not require lubrication in operation but can also be installed in systems that are lubricated.

Operating information

	P2L-AZ	P2L-BZ	P2L-CZ
Port size:	G1/8	G1/4	G3/8
Working pressure:	10 bar	10 bar	10 bar
Working temperature	-10 °C to +50 °C		
Flow (Qmax);	15,6 l/s	37,8 l/s	68,3 l/s

For more information see www.parker.com/euro_pneumatic

Solenoid and pneumatically operated directional control valves

3/2 valves, internal air, standard temperature

Symbol	Size	Actuation	Return	Min Operating Pressure (bar)	Changeover time (ms) at 6 bar @20°C actua./return	Weight Kg	Order code Without coil	Order code With 24V DC (22mm coil)
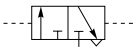	G1/8 G1/4 G3/8	Air signal	Air signal	1.5 1.5 1.5	5/5 6/6 8/8	0.18 0.18 0.36	**P2LAZ311PP** **P2LBZ312PP** **P2LCZ313PP**	
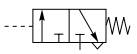	G1/8 G1/4 G3/8	Air signal	Spring	3.0 3.0 3.0	8/15 10/20 10/30	0.16 0.16 0.35	**P2LAZ311PS** **P2LBZ312PS** **P2LCZ313PS**	
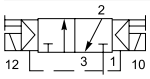	G1/8 G1/4 G3/8	Electric signal	Electric signal	1.5 1.5 1.5	10/10 12/12 17/17	0.18 0.18 0.36	**P2LAZ311EENDCN** **P2LBZ312EENDCN** **P2LCZ313EENDCN**	**P2LAZ311EENDCB49** **P2LBZ312EENDCB49** **P2LCZ313EENDCB49**
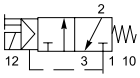	G1/8 G1/4 G3/8	Electric signal	Spring	3.0 3.0 3.0	15/35 18/45 27/75	0.16 0.16 0.35	**P2LAZ311ESNDCN** **P2LBZ312ESNDCN** **P2LCZ313ESNDCN**	**P2LAZ311ESNDCB49** **P2LBZ312ESNDCB49** **P2LCZ313ESNDCB49**

5/2 valves, internal air, standard temperature

Symbol	Size	Actuation	Return	Min Operating Pressure (bar)	Changeover time (ms) at 6 bar @20°C actua./return	Weight Kg	Order code Without coil	Order code With 24V DC (22mm coil)
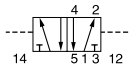	G1/8 G1/4 G3/8	Air signal	Air signal	1.5 1.5 1.5	5/5 6/6 8/8	0.18 0.18 0.36	**P2LAZ511PP** **P2LBZ512PP** **P2LCZ513PP**	
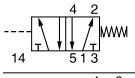	G1/8 G1/4 G3/8	Air signal	Spring	3.0 3.0 3.0	8/15 10/20 10/30	0.16 0.16 0.35	**P2LAZ511PS** **P2LBZ512PS** **P2LCZ513PS**	
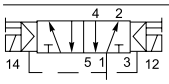	G1/8 G1/4 G3/8	Electric signal	Electric signal	1.5 1.5 1.5	10/10 12/12 17/17	0.19 0.21 0.44	**P2LAZ511EENDCN** **P2LBZ512EENDCN** **P2LCZ513EENDCN**	**P2LAZ511EENDCB49** **P2LBZ512EENDCB49** **P2LCZ513EENDCB49**
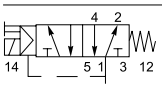	G1/8 G1/4 G3/8	Electric signal	Spring	3.0 3.0 3.0	15/35 18/45 27/75	0.17 0.20 0.43	**P2LAZ511ESNDCN** **P2LBZ512ESNDCN** **P2LCZ513ESNDCN**	**P2LAZ511ESNDCB49** **P2LBZ512ESNDCB49** **P2LCZ513ESNDCB49**

Tel: +45 63 12 83 00 | Email: ps@hymatik.com | www.hymatik.com | Hvidkaervej 27a, DK-5250 Odense SV, Denmark

5/3 valves, internal air, standard temperature

Symbol	Size	Actuation		Min Operating Pressure (bar)	Changeover time (ms) at 6 bar @20°C actua./return	Weight Kg	Order code Without coil	Order code With 24V DC (22mm coil)
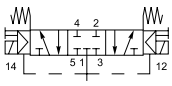	G1/8		Self centring	3,0	18/40	0,26	**P2LAZ611EENDCN**	**P2LAZ611EENDCB49**
	G1/4	Electric/Electric	Closed	3,0	22/55	0,28	**P2LBZ612EENDCN**	**P2LBZ612EENDCB49**
	G3/8		Centre	3,0	30/90	0,60	**P2LCZ613EENDCN**	**P2LCZ613EENDCB49**
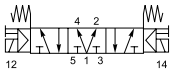	G1/8		Self centring	3,0	18/40	0,26	**P2LAZ711EENDCN**	**P2LAZ711EENDCB49**
	G1/4	Electric/Electric	Presurised	3,0	22/45	0,28	**P2LBZ712EENDCN**	**P2LBZ712EENDCB49**
	G3/8		Centre	3,0	30/90	0,60	**P2LCZ713EENDCN**	**P2LCZ713EENDCB49**
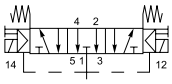	G1/8		Self centring	3,0	18/40	0,26	**P2LAZ811EENDCN**	**P2LAZ811EENDCB49**
	G1/4	Electric/Electric	Vented	3,0	22/45	0,28	**P2LBZ812EENDCN**	**P2LBZ812EENDCB49**
	G3/8		Centre	3,0	30/90	0,60	**P2LCZ813EENDCN**	**P2LCZ813EENDCB49**

Note: All valves may be ordered with non locking manual override, replacing

...CN with **...BN**

...CB49 with **...BB49**

Viking Lite

Available in boxed quantities of 25



The Viking Lite valve is available in boxed quantities of 25 combines high performance with compact installation dimensions. Large flow capacity, short change-over times and low change-over pressure are important characteristics of this valve range.

5/2 valves, internal air, standard temperature

Size	Actuation	Return	Order code Without solenoid	Order code With 24V DC (22mm coil)
G1/8	Electric	Electric	**P2LAZ511EENDCNQ25**	**P2LAZ511EENDCB49Q25**
G1/4	signal	signal	**P2LBZ512EENDCNQ25**	**P2LBZ512EENDCB49Q25**
G1/8	Electric	Spring	**P2LAZ511ESNDCNQ25**	**P2LAZ511ESNDCB49Q25**
G1/4	signal		**P2LBZ512ESNDCNQ25**	**P2LBZ512ESNDCB49Q25**

Parker Hannifin Corporation
Pneumatic Division - Europe

Tel: +45 63 12 83 00 | Email: ps@hymatik.com | www.hymatik.com | Hvidkaervej 27a, DK-5250 Odense SV, Denmark

Dimensions

P2LAZ 3/2
Air / Air

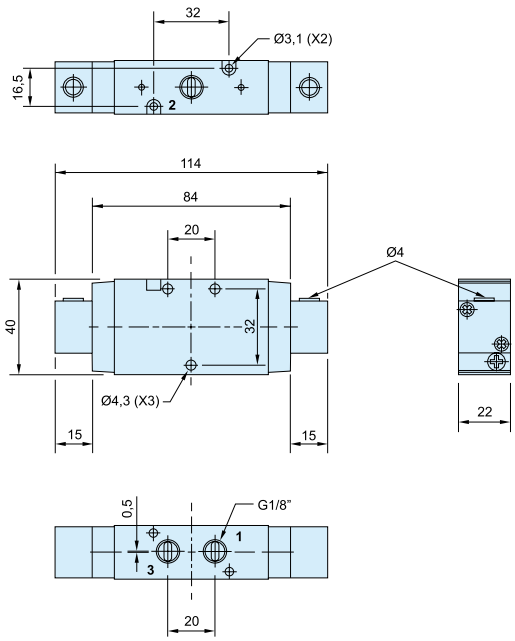

P2LAZ 3/2
Air / Spring

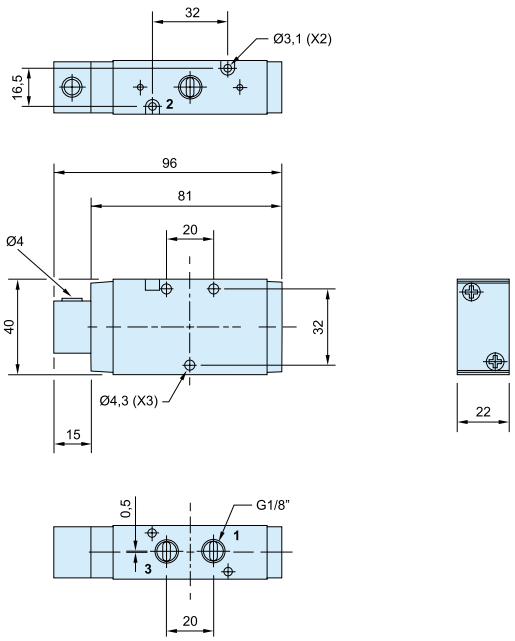

P2LAZ 3/2
Solenoid / Solenoid

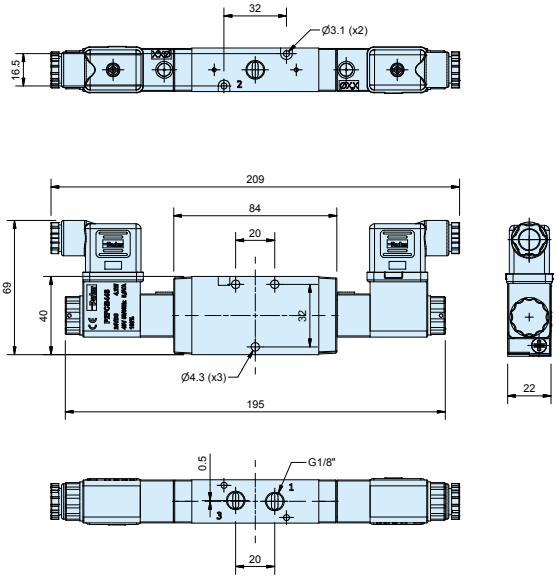

P2LAZ 3/2
Solenoid / Spring

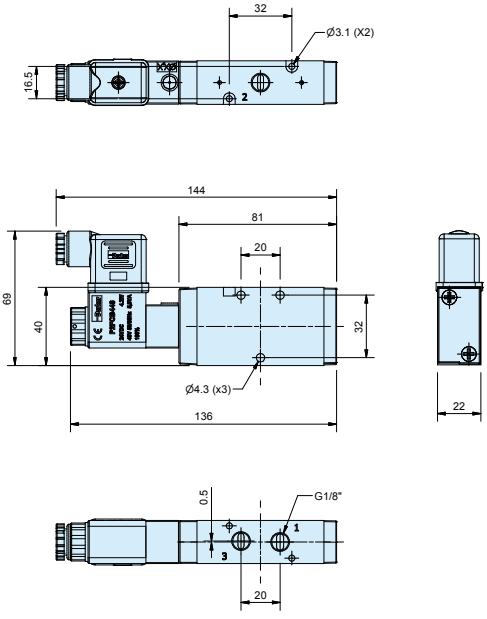

Solenoid valves
Solenoid valves and cable plugs must be ordered separately. One pilot valve is required for each E (NDCN only) in the valve order code.

Tel: +45 63 12 83 00 | Email: ps@hymatik.com | www.hymatik.com | Hvidkaervej 27a, DK-5250 Odense SV, Denmark

Dimensions

P2LAZ 5/2 and 5/3
Solenoid / Solenoid

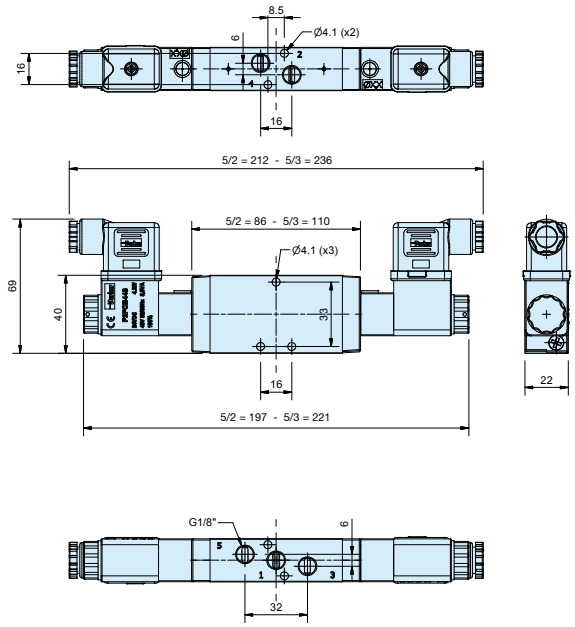

P2LAZ 5/2
Solenoid / Spring

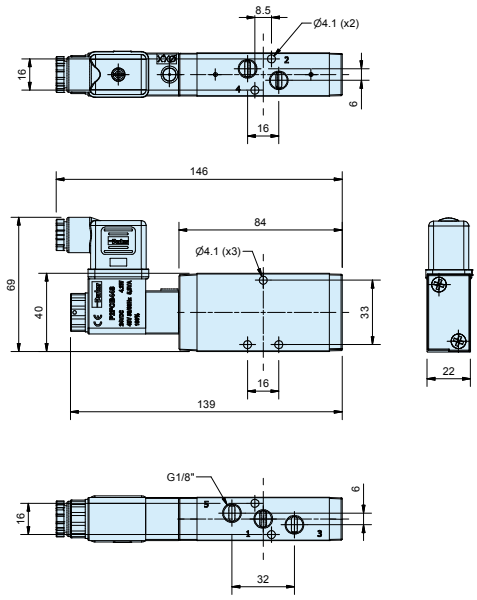

P2LBZ 3/2
Air / Air

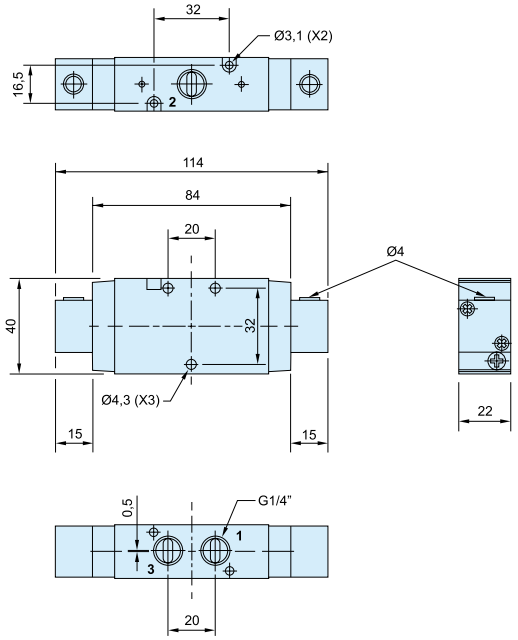

P2LBZ 3/2
Air / Spring

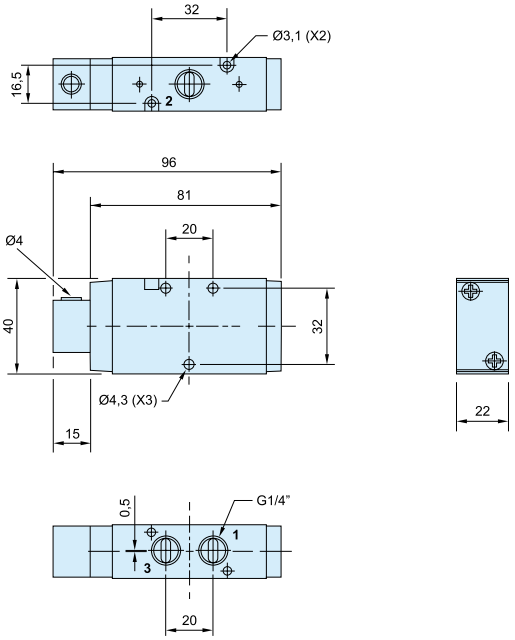

Solenoid valves
Solenoid valves and cable plugs must be ordered separately. One pilot valve is required for each E (NDCN only) in the valve order code.

Tel: +45 63 12 83 00 | Email: ps@hymatik.com | www.hymatik.com | Hvidkaervej 27a, DK-5250 Odense SV, Denmark

Dimensions

P2LBZ 3/2
Solenoid / Solenoid

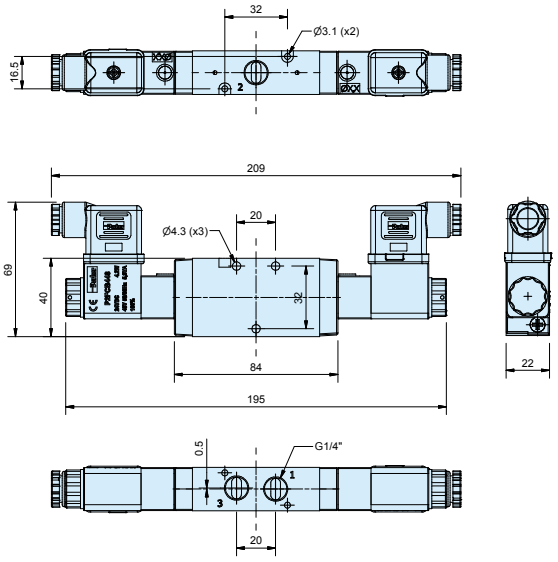

P2LBZ 3/2
Solenoid / Spring

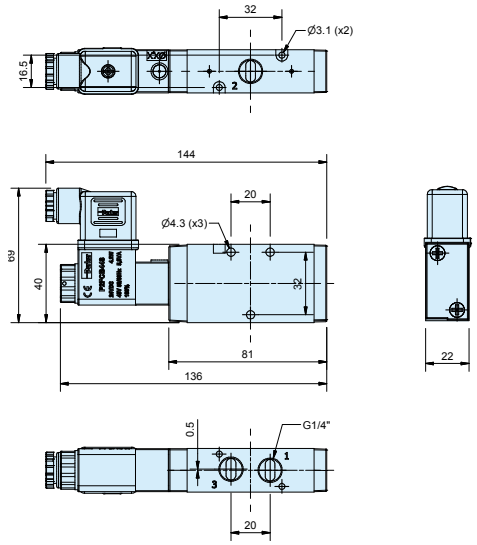

P2LBZ 5/2 and 5/3
Solenoid / Solenoid

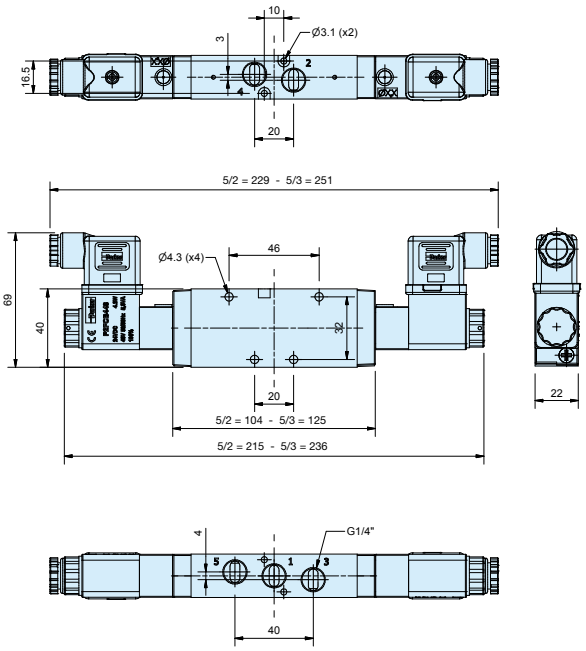

P2LBZ 5/2
Solenoid / Spring

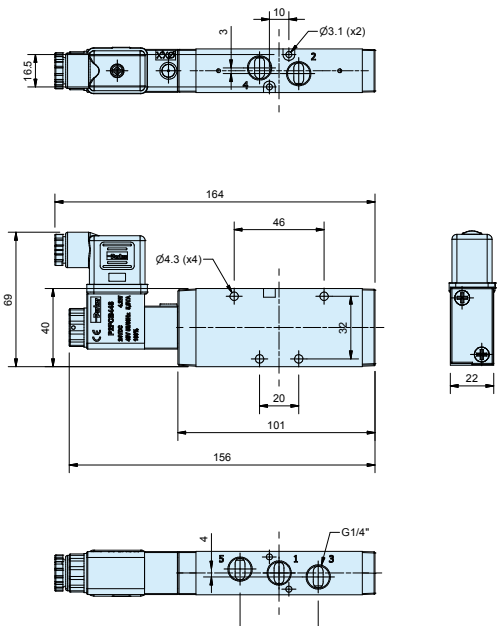

Solenoid valves
Solenoid valves and cable plugs must be ordered separately. One pilot valve is required for each E (NDCN only) in the valve order code.

Tel: +45 63 12 83 00 | Email: ps@hymatik.com | www.hymatik.com | Hvidkaervej 27a, DK-5250 Odense SV, Denmark

Dimensions

P2LCZ 3/2
Air / Air

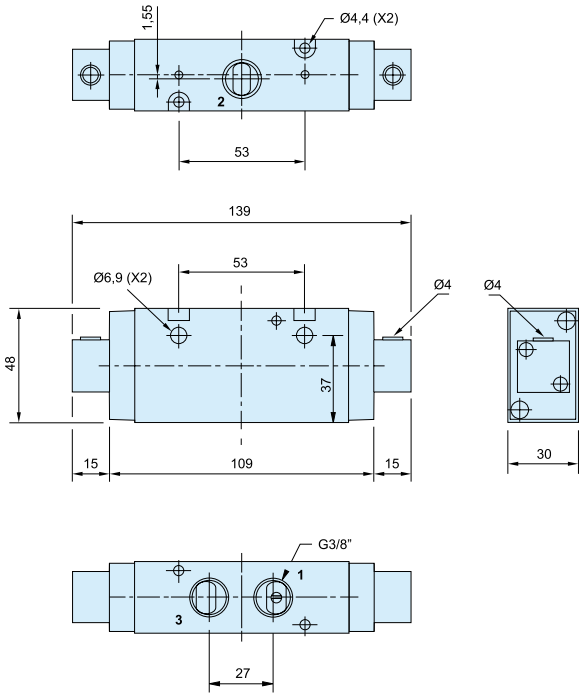

P2LCZ 3/2
Air / Spring

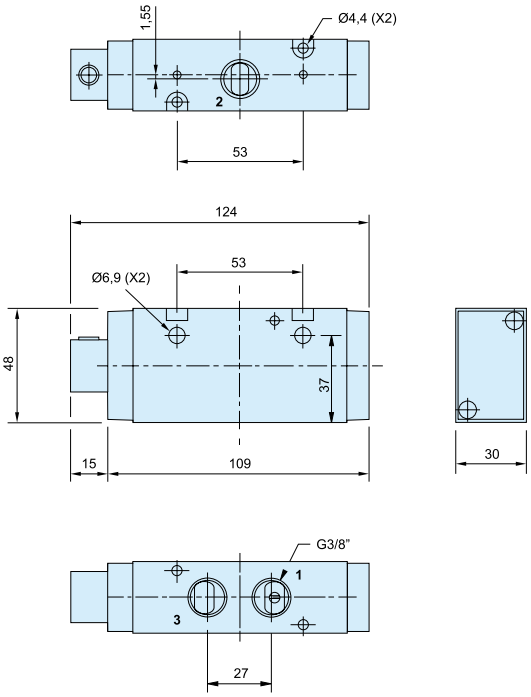

P2LCZ 3/2
Solenoid / Solenoid

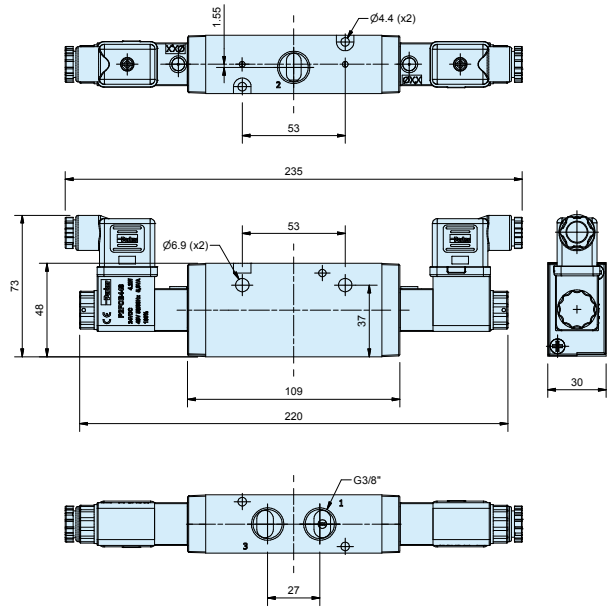

P2LCZ 3/2
Solenoid / Spring

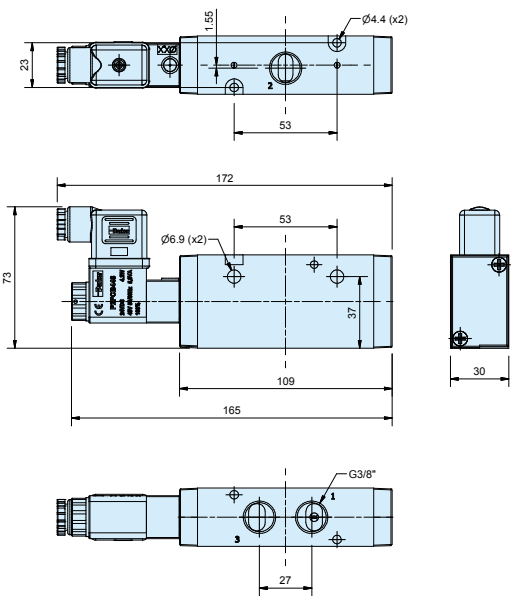

Solenoid valves
Solenoid valves and cable plugs must be ordered separately. One pilot valve is required for each E (NDCN only) in the valve order code.

Tel: +45 63 12 83 00 | Email: ps@hymatik.com | www.hymatik.com | Hvidkaervej 27a, DK-5250 Odense SV, Denmark

Dimensions

P2LCZ 5/2 and 5/3
Solenoid / Solenoid

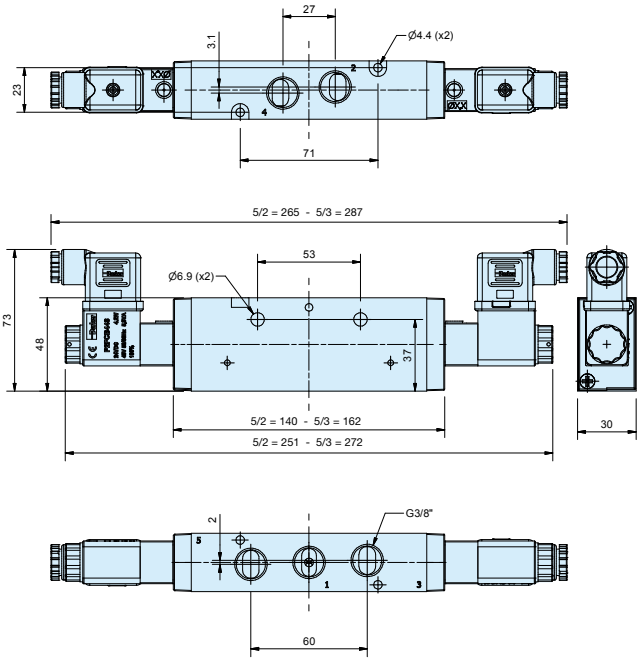

P2LCZ 5/2
Solenoid / Spring

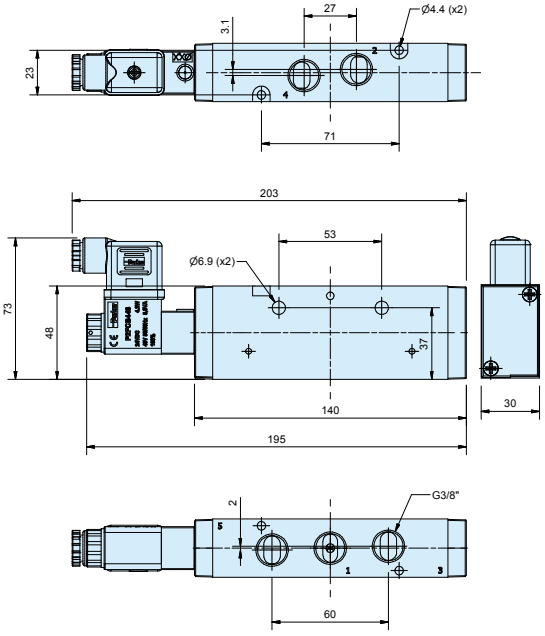

Solenoid valves
Solenoid valves and cable plugs must be ordered separately. One pilot valve is required for each E (NDCN only) in the valve order code.

Tel: +45 63 12 83 00 | Email: ps@hymatik.com | www.hymatik.com | Hvidkaervej 27a, DK-5250 Odense SV, Denmark

Accessories	Type P2LA / P2LB 3/2 valves	Weight kg	Order code
	**Manifold bar, P2LB** incl. fasteners and O-ring. G3/8		
	For 2 valves	0,38	**91213202SXZ**
	For 4 valves	0,64	**91213204SXZ**
	For 6 valves	0,89	**91213206SXZ**
	For 8 valves	1,15	**91213208SXZ**
	For 10 valves	1,40	**91213210SXZ**
	**Blanking plate** for Manifold bar	0,10	**912132BPSXZ**

Dimensions

Manifold bar

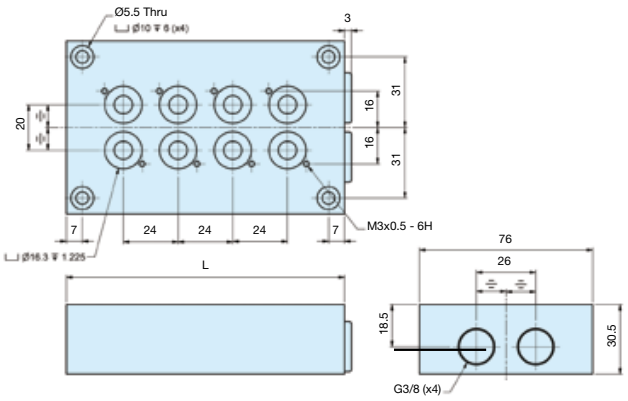

No. of valves	L mm
2	74
4	122
6	170
8	218
10	266

Blanking plate for manifold bar, P2LB

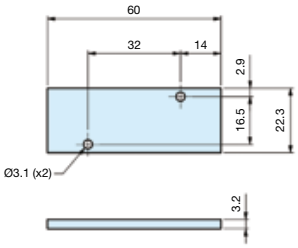

Tel: +45 63 12 83 00 | Email: ps@hymatik.com | www.hymatik.com | Hvidkaervej 27a, DK-5250 Odense SV, Denmark

Accessories	Type P2LA 5/2 valves	Weight kg	Order code
	**Manifold bar, P2LA** including seals, mounting screws. G3/8		
	For 4 valves	0,48	**9121658075**
	For 6 valves	0,63	**9121658076**
	For 8 valves	0,80	**9121658077**
	For 10 valves	0,98	**9121658078**
	For 12 valves	1,10	**9121658079**
	For 14 valves	1,23	**9121658099**
	**Blanking plate, P2LA** for Manifold bar	0,05	**9121658063**
	**Pressure bar, P2LA** for common air supply incl. O-rings and mounting screws. G1/4		
	For 2 valves	0,13	**9121658070**
	For 4 valves	0,20	**9121658071**
	For 6 valves	0,26	**9121658072**
	For 8 valves	0,33	**9121658073**
	**Blanking plate, P2LA** for Pressure bar	0,05	**9121658074**
	**Assembly screws, P2LA** in stainless steel for valve	0,02	**9121658043**
	**Assembly screws, P2LA** in stainless steel for blanking plate	0,01	**9121658044**
	**O-ring kit, P2LA** O-rings between valve and manifold bar/Pressure bar	0,01	**9121658046**

Dimensions

Manifold bar, P2LA

No. of valves	L mm
4	126
6	174
8	222
10	270
12	318
14	366

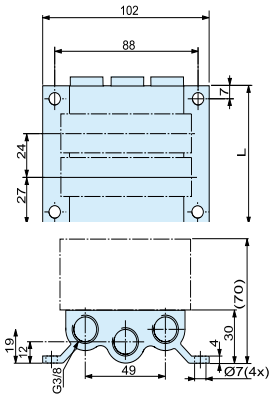

Blanking plate for manifold bar, P2LA

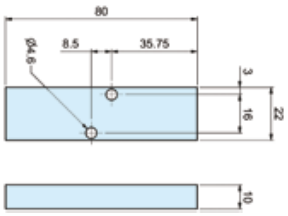

Pressure bar, P2LA

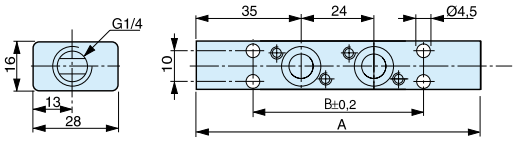

Blanking plate for pressure bar, P2LA

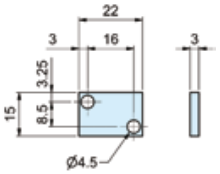

No. of valves	A mm	B mm
2	94	56
4	142	104
6	190	152
8	238	200

Accessories	Type P2LB 5/2 valves	Weight kg	Order code
	**Manifold bar, P2LB** incl. fasteners and O-ring. G3/8		
	For 2 valves	0,69	**9121594805X**
	For 4 valves	1,13	**9121594806X**
	For 6 valves	1,56	**9121594807X**
	For 8 valves	2,00	**9121594808X**
	For 10 valves	2,45	**9121594812X**
	**Blanking plate, P2LB** for Manifold bar	0,10	**9121594809X**
	**Pressure bar, P2LB** for common air supply incl. O-rings and mounting screws. G3/8		
	For 2 valves	0,38	**9127113301X**
	For 4 valves	0,53	**9127113302X**
	For 6 valves	0,68	**9127113303X**
	For 8 valves	0,83	**9127113304X**
	For 10 valves	0,99	**9127113305X**
	**Blanking plate P2LB** for Pressure bar. G1/4	0,02	**9127113306X**

Dimensions

Manifold bar, P2LB

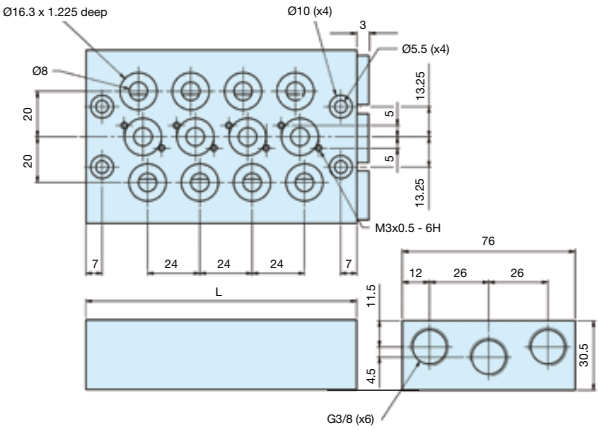

No. of valves	L mm
2	74
4	122
6	170
8	218
10	266

Blanking plate for manifold bar, P2LB

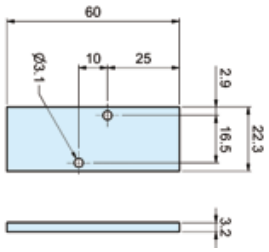

Pressure bar, P2LB

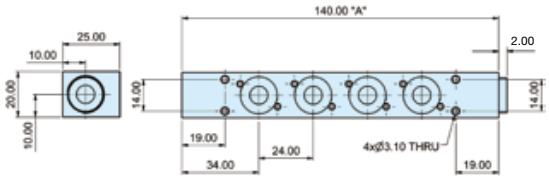

Blanking plate for pressure bar, P2LB

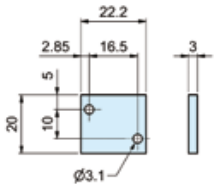

No. of valves	A mm
2	92
4	140
6	188
8	236
10	284

Parker Hannifin Corporation
Pneumatic Division - Europe

Tel: +45 63 12 83 00 | Email: ps@hymatik.com | www.hymatik.com | Hvidkaervej 27a, DK-5250 Odense SV, Denmark

22mm solenoid operator part numbers and spares

Solenoid coils for 22mm solenoid operators

Voltage	Weight (Kg)	Order code Form B
12V 60Hz	0.093	**P2FCB440**
24V 50/60Hz	0.093	**P2FCB442**
12V DC	0.093	**P2FCB445**
24V DC	0.093	**P2FCB449**
48V DC	0.093	**P2FCB451**
110V/50Hz, 120V/60Hz	0.093	**P2FCB453**
230V/50Hz, 230V/60Hz	0.093	**P2FCB457**

Spare Solenoid Nuts

Valves requiring captured exhaust should be fitted with plastic knurled nut

Order code
P2FNP

Valves with vented exhaust are fitted with diffuser plastic nut

Order Code
P2FND

Solenoid Connectors / Cable Plugs EN175301-803

	Description	Order code 22mm Industrial Form B
With standard screw	Standard IP65 without flying lead	**3EV10V10**
	With LED and protection 24V AC/DC	**3EV10V20-24**
	With LED and protection 110V AC	**3EV10V20-110**
	With LED and protection 230V AC	**3EV10V20-230**
With cable	24V AC/DC, 5m cable LED and protection IP65	**3EV10V20-24L5**
	110V AC/DC, 5m cable LED and protection IP65	**3EV10V20-110L5**
	230V AC, 5m cable LED and protection IP65	**3EV10V20-230L5**

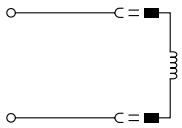

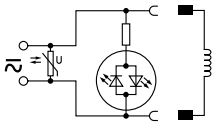

3EV10V10

3EV10V20-24	**3EV10V20-24L5**
3EV10V20-110	**3EV10V20-110L5**
3EV10V20-230	**3EV10V20-230L5**

Cable Plug Dimensions (mm)

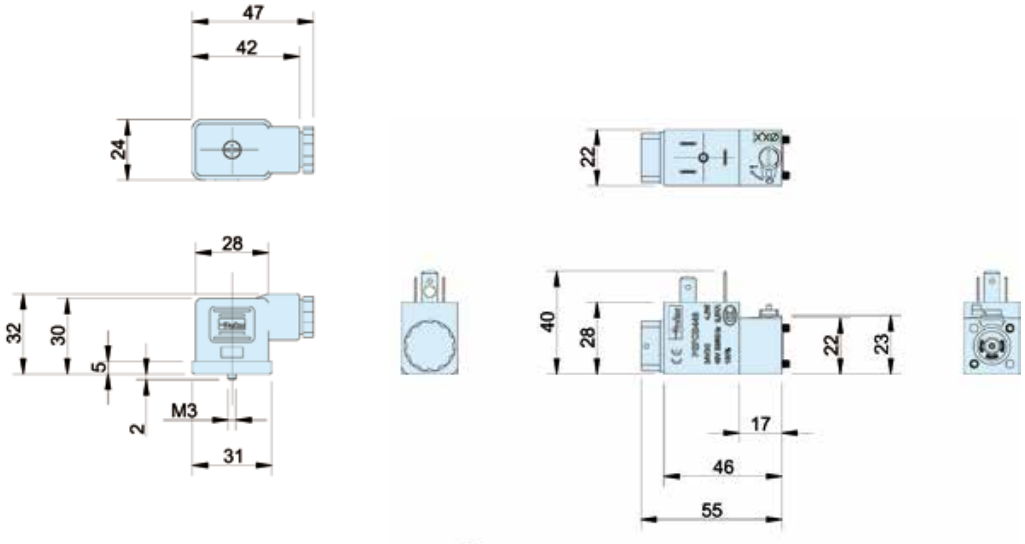






Viking Xtreme

High performance directional control valves
G1/8 - G1/2 body ported



Extreme Environments

*Demand The **Viking Xtreme***

The Viking Xtreme valve range is robust, versatile and combines high performance with compact installation dimensions. Large flow capacity, short change-over times and low change-over pressure are important characteristics of this valve range.

The 1/8 & 1/4 sizes are designed to operate with pressures up to 16 bar and the 3/8 & 1/2 sizes up to 12 bar, in ambient temperatures -40°C to + 60°C when fitted with suitable solenoid operators.

Tel: +45 63 12 83 00 | Email: ps@hymatik.com | www.hymatik.com | Hvidkaervej 27a, DK-5250 Odense SV, Denmark

The Viking Xtreme valve range is robust, versatile and combines high performance with compact installation dimensions. Large flow capacity, short change-over times and low change-over pressure are important characteristics of this valve range.

- 4 sizes: G1/8, G1/4, G3/8 and G1/2.
- Wide operating temperature range
- Compact design with good corrosion resistance.
- Wide range of 3/2, 5/2 and 5/3 versions.
- High and low temperature versions available for transport applications.
- Lever operated version.
- Twist operated version.



Operating information

	P2L-AX	P2L-BX	P2L-CX	P2L-DX
Working pressure:	16 bar	16 bar	12 bar	12 bar
Working temperature, standard				
Air pilot solenoid		-40 °C to +60 °C		
Standard and food version		-10 °C to +50 °C		
Mobile & Lever operated version		-40 °C to +60 °C		
Flow (Qmax);	P2L-AX	P2L-BX	P2L-CX	P2L-DX
	19,0 l/s	38,0 l/s	72,0 l/s	78,0 l/s

For more information see www.parker.com/euro_pneumatic

For ATEX specific products contact Sales Office

Pneumatically actuated 3/2, 5/2 and 5/3 valves

Symbol	Size	Actuator	Return	Order code
3/2 valves, temperature -40°C to +60°C				
	G1/8	Air pilot	Air pilot	**P2LAX311PP**
	G1/4			**P2LBX312PP**
	G3/8			**P2LCX313PP**
	G1/2			**P2LDX314PP**
	G1/8	Air pilot	Spring	**P2LAX311PS**
	G1/4			**P2LBX312PS**
	G3/8			**P2LCX313PS**
	G1/2			**P2LDX314PS**
5/2 valves, temperature -40°C to +60°C				
	G1/8	Air pilot	Air pilot	**P2LAX511PP**
	G1/4			**P2LBX512PP**
	G3/8			**P2LCX513PP**
	G1/2			**P2LDX514PP**
	G1/8	Air pilot	Spring	**P2LAX511PS**
	G1/4			**P2LBX512PS**
	G3/8			**P2LCX513PS**
	G1/2			**P2LDX514PS**

Symbol	Size	Actuator	Return	Order code
5/3 valves, temperature -40°C to +60°C				
	G1/8	Air pilot	Air pilot	**P2LAX611PP**
	G1/4	Closed	Self	**P2LBX612PP**
	G3/8	centre	centring	**P2LCX613PP**
	G1/2			**P2LDX614PP**
	G1/8	Air pilot	Air pilot	**P2LAX811PP**
	G1/4	Vented	Self	**P2LBX812PP**
	G3/8	centre	centring	**P2LCX813PP**
	G1/2			**P2LDX814PP**
	G1/8	Air pilot	Air pilot	**P2LAX711PP**
	G1/4	Pressure	Self	**P2LBX712PP**
	G3/8	centre	centring	**P2LCX713PP**
	G1/2			**P2LDX714PP**

Tel: +45 63 12 83 00 | Email: ps@hymatik.com | www.hymatik.com | Hvidkaervej 27a, DK-5250 Odense SV, Denmark

Electrically actuated 3/2, 5/2 and 5/3 valves - 15mm solenoid

Symbol	Size	Actuator	Return	**Order code** 15mm solenoid with 24 VDC sol	**Order code** without 15mm solenoid
3/2 valves, internal air, standard temperature					
	G1/8	Solenoid	Solenoid	**P2LAX311EENXB549**	**P2LAX311EENXXX**
	G1/4			**P2LBX312EENXB549**	**P2LBX312EENXXX**
	G3/8			**P2LCX313EENXB549**	**P2LCX313EENXXX**
	G1/2			**P2LDX314EENXB549**	**P2LDX314EENXXX**
	G1/8	Solenoid	Spring	**P2LAX311ESNXB549**	**P2LAX311ESNXXX**
	G1/4			**P2LBX312ESNXB549**	**P2LBX312ESNXXX**
	G3/8			**P2LCX313ESNXB549**	**P2LCX313ESNXXX**
	G1/2			**P2LDX314ESNXB549**	**P2LDX314ESNXXX**
5/2 valves, internal air, standard temperature					
	G1/8	Solenoid	Solenoid	**P2LAX511EENXB549**	**P2LAX511EENXXX**
	G1/4			**P2LBX512EENXB549**	**P2LBX512EENXXX**
	G3/8			**P2LCX513EENXB549**	**P2LCX513EENXXX**
	G1/2			**P2LDX514EENXB549**	**P2LDX514EENXXX**
	G1/8	Solenoid	Spring	**P2LAX511ESNXB549**	**P2LAX511ESNXXX**
	G1/4			**P2LBX512ESNXB549**	**P2LBX512ESNXXX**
	G3/8			**P2LCX513ESNXB549**	**P2LCX513ESNXXX**
	G1/2			**P2LDX514ESNXB549**	**P2LDX514ESNXXX**
5/3 valves, internal air, standard temperature					
	G1/8	Solenoid	Solenoid	**P2LAX611EENXB549**	**P2LAX611EENXXX**
	G1/4	Closed	Self	**P2LBX612EENXB549**	**P2LBX612EENXXX**
	G3/8	centre	centring	**P2LCX613EENXB549**	**P2LCX613EENXXX**
	G1/2			**P2LDX614EENXB549**	**P2LDX614EENXXX**
	G1/8	Solenoid	Solenoid	**P2LAX811EENXB549**	**P2LAX811EENXXX**
	G1/4	Vented	Self	**P2LBX812EENXB549**	**P2LBX812EENXXX**
	G3/8	centre	centring	**P2LCX813EENXB549**	**P2LCX813EENXXX**
	G1/2			**P2LDX814EENXB549**	**P2LDX814EENXXX**
	G1/8	Solenoid	Solenoid	**P2LAX711EENXB549**	**P2LAX711EENXXX**
	G1/4	Pressure	Self	**P2LBX712EENXB549**	**P2LBX712EENXXX**
	G3/8	centre	centring	**P2LCX713EENXB549**	**P2LCX713EENXXX**
	G1/2			**P2LDX714EENXB549**	**P2LDX714EENXXX**

Electrically actuated 3/2, 5/2 and 5/3 valves - 22mm solenoid

Symbol	Size	Actuator	Return	**Order code** 22mm solenoid 24 VDC	**Order code** Without solenoid coil
3/2 valves, internal air, standard temperature					
	G1/8	Solenoid	Solenoid	**P2LAX311EENDDB49**	**P2LAX311EENDDN**
	G1/4			**P2LBX312EENDDB49**	**P2LBX312EENDDN**
	G3/8			**P2LCX313EENDDB49**	**P2LCX313EENDDN**
	G1/2			**P2LDX314EENDDB49**	**P2LDX314EENDDN**
	G1/8	Solenoid	Spring	**P2LAX311ESNDDB49**	**P2LAX311ESNDDN**
	G1/4			**P2LBX312ESNDDB49**	**P2LBX312ESNDDN**
	G3/8			**P2LCX313ESNDDB49**	**P2LCX313ESNDDN**
	G1/2			**P2LDX314ESNDDB49**	**P2LDX314ESNDDN**
5/2 valves, internal air, standard temperature					
	G1/8	Solenoid	Solenoid	**P2LAX511EENDDB49**	**P2LAX511EENDDN**
	G1/4			**P2LBX512EENDDB49**	**P2LBX512EENDDN**
	G3/8			**P2LCX513EENDDB49**	**P2LCX513EENDDN**
	G1/2			**P2LDX514EENDDB49**	**P2LDX514EENDDN**
	G1/8	Solenoid	Spring	**P2LAX511ESNDDB49**	**P2LAX511ESNDDN**
	G1/4			**P2LBX512ESNDDB49**	**P2LBX512ESNDDN**
	G3/8			**P2LCX513ESNDDB49**	**P2LCX513ESNDDN**
	G1/2			**P2LDX514ESNDDB49**	**P2LDX514ESNDDN**
5/3 valves, internal air, standard temperature					
	G1/8	Solenoid	Solenoid	**P2LAX611EENDDB49**	**P2LAX611EENDDN**
	G1/4	Closed	Self	**P2LBX612EENDDB49**	**P2LBX612EENDDN**
	G3/8	centre	centring	**P2LCX613EENDDB49**	**P2LCX613EENDDN**
	G1/2			**P2LDX614EENDDB49**	**P2LDX614EENDDN**
	G1/8	Solenoid	Solenoid	**P2LAX811EENDDB49**	**P2LAX811EENDDN**
	G1/4	Vented	Self	**P2LBX812EENDDB49**	**P2LBX812EENDDN**
	G3/8	centre	centring	**P2LCX813EENDDB49**	**P2LCX813EENDDN**
	G1/2			**P2LDX814EENDDB49**	**P2LDX814EENDDN**
	G1/8	Solenoid	Solenoid	**P2LAX711EENDDB49**	**P2LAX711EENDDN**
	G1/4	Pressure	Self	**P2LBX712EENDDB49**	**P2LBX712EENDDN**
	G3/8	centre	centring	**P2LCX713EENDDB49**	**P2LCX713EENDDN**
	G1/2			**P2LDX714EENDDB49**	**P2LDX714EENDDN**

Parker Hannifin Corporation
Pneumatic Division - Europe

Tel: +45 63 12 83 00 | Email: ps@hymatik.com | www.hymatik.com | Hvidkaervej 27a, DK-5250 Odense SV, Denmark

Electrically actuated 3/2, 5/2 and 5/3 - Xtreme duty 16 bar - 40°C to +60°C.

P2LAX/P2LBX 16 bar and P2LCX/P2LDX 12 bar

Symbol	Size	Actuator	Return	**Order code** 22mm solenoid 24 VDC	**Order code** Without solenoid coil
3/2 valves, internal air, low temperature					
	G1/8	Solenoid	Solenoid	**P2LAX311EEHDDB49**	**P2LAX311EEHDDN**
	G1/4		Low temp.	**P2LBX312EEHDDB49**	**P2LBX312EEHDDN**
	G3/8			**P2LCX313EEHDDB49**	**P2LCX313EEHDDN**
	G1/2			**P2LDX314EEHDDB49**	**P2LDX314EEHDDN**
	G1/8	Solenoid	Spring	**P2LAX311ESHDDB49**	**P2LAX311ESHDDN**
	G1/4		Low temp.	**P2LBX312ESHDDB49**	**P2LBX312ESHDDN**
	G3/8			**P2LCX313ESHDDB49**	**P2LCX313ESHDDN**
	G1/2			**P2LDX314ESHDDB49**	**P2LDX314ESHDDN**
5/2 valves, internal air, low temperature					
	G1/8	Solenoid	Solenoid	**P2LAX511EEHDDB49**	**P2LAX511EEHDDN**
	G1/4		Low temp.	**P2LBX512EEHDDB49**	**P2LBX512EEHDDN**
	G3/8			**P2LCX513EEHDDB49**	**P2LCX513EEHDDN**
	G1/2			**P2LDX514EEHDDB49**	**P2LDX514EEHDDN**
	G1/8	Solenoid	Spring	**P2LAX511ESHDDB49**	**P2LAX511ESHDDN**
	G1/4		Low temp.	**P2LBX512ESHDDB49**	**P2LBX512ESHDDN**
	G3/8			**P2LCX513ESHDDB49**	**P2LCX513ESHDDN**
	G1/2			**P2LDX514ESHDDB49**	**P2LDX514ESHDDN**
5/3 valves, internal air, low temperature					
	G1/8	Solenoid	Solenoid	**P2LAX611EEHDDB49**	**P2LAX611EEHDDN**
	G1/4	Closed	Self	**P2LBX612EEHDDB49**	**P2LBX612EEHDDN**
	G3/8	centre	centring	**P2LCX613EEHDDB49**	**P2LCX613EEHDDN**
	G1/2			**P2LDX614EEHDDB49**	**P2LDX614EEHDDN**
	G1/8	Solenoid	Solenoid	**P2LAX811EEHDDB49**	**P2LAX811EEHDDN**
	G1/4	Vented	Self	**P2LBX812EEHDDB49**	**P2LBX812EEHDDN**
	G3/8	centre	centring	**P2LCX813EEHDDB49**	**P2LCX813EEHDDN**
	G1/2			**P2LDX814EEHDDB49**	**P2LDX814EEHDDN**
	G1/8	Solenoid	Solenoid	**P2LAX711EEHDDB49**	**P2LAX711EEHDDN**
	G1/4	Pressure	Self	**P2LBX712EEHDDB49**	**P2LBX712EEHDDN**
	G3/8	centre	centring	**P2LCX713EEHDDB49**	**P2LCX713EEHDDN**
	G1/2			**P2LDX714EEHDDB49**	**P2LDX714EEHDDN**

Pneumatic twist operated valves - Xtreme operating pressure / temperature

Max operating pressure 16 bar (A & B) 12 bar (C & D). temp range -40°C to +60°C

Symbol	Size	Actuation	Return	Changeover Angle	**Order code**
3/2 valves, temperature -40°C to +60°C					
	G1/4	Twist	Twist	45	**P2LBX312JJ**
5/2 valves, temperature -40°C to +60°C					
	G1/4	Twist	Twist	45	**P2LBX512JJ**
5/3 valves, temperature -40°C to +60°C					
	G1/4	Twist	Twist	54	**P2LBX71277**
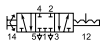	G1/4	Twist	Twist	54	**P2LBX61277**
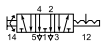	G1/4	Twist	Twist	54	**P2LBX81277**

Tel: +45 63 12 83 00 | Email: ps@hymatik.com | www.hymatik.com | Hvidkaervej 27a, DK-5250 Odense SV, Denmark

Lever operated directional control valves

Max operating pressure 16 bar (A & B) 12 bar (C & D). temp range -40°C to +60°C

Symbol	Size	Actuation	Return	Changeover angle	Changeover Force	Type	Weight Kg	Order code
3/2 valves, standard temperature / Low temperature, lever 90° to ports								
	G1/8	Lever	Lever	20°	9 N	Std.	0,33	**P2LAX311VV**
	G1/4	Lever	Lever	20°	9 N	Std.	0,33	**P2LBX312VV**
	G3/8	Lever	Lever	32°	25 N	Std.	0,40	**P2LCX313VV**
	G1/2	Lever	Lever	32°	25 N	Std.	0,60	**P2LDX314VV**
	G1/8	Lever	Spring	20°	10N	Std.	0,33	**P2LAX311VS**
	G1/4	Lever	Spring	20°	10N	Std.	0,33	**P2LBX312VS**
	G3/8	Lever	Spring	32°	15 N	Std.	0,40	**P2LCX313VS**
	G1/2	Lever	Spring	32°	15 N	Std.	0,60	**P2LDX314VS**
5/2 valves, standard temperature / Low temperature, lever 90° to ports								
	G1/8	Lever	Lever	28°	9 N	Std.	0,18	**P2LAX511VV**
	G1/4	Lever	Lever	20°	9 N	Std.	0,33	**P2LBX512VV**
	G3/8	Lever	Lever	32°	25 N	Std.	0,40	**P2LCX513VV**
	G1/2	Lever	Lever	32°	25 N	Std.	0,60	**P2LDX514VV**
	G1/8	Lever	Spring	28°	10N	Std.	0,18	**P2LAX511VS**
	G1/4	Lever	Spring	20°	10N	Std.	0,33	**P2LBX512VS**
	G3/8	Lever	Spring	32°	15 N	Std.	0,40	**P2LCX513VS**
	G1/2	Lever	Spring	32°	15 N	Std.	0,60	**P2LDX514VS**
5/3 valves, low temperature, lever 90° to ports								
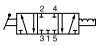	G1/8	Lever	Lever	±14°	15 N	Std.	0,18	**P2LAX61122**
	G1/4	Closed centre position held in three positions		±12°	15 N	Std.	0,33	**P2LBX61222**
	G3/8			±16°	17 N	Std.	0,71	**P2LCX61322**
	G1/2			±16°	17 N	Std.	0,73	**P2LDX61422**
	G1/8	Lever	Lever	±14°	15 N	Std.	0,18	**P2LAX81122**
	G1/4	Exhausted centre position held in three positions		±12°	15 N	Std.	0,33	**P2LBX81222**
	G3/8			±16°	17 N	Std.	0,71	**P2LCX81322**
	G1/2			±16°	17 N	Std.	0,73	**P2LDX81422**
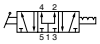	G1/8	Lever	Lever	±14°	15 N	Std.	0,18	**P2LAX71122**
	G1/4	Pressure applied centre position held in three positions		±12°	15 N	Std.	0,33	**P2LBX71222**
	G3/8			±16°	17 N	Std.	0,71	**P2LCX71322**
	G1/2			±16°	17 N	Std.	0,73	**P2LDX71422**
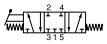	G1/8	Lever	Lever	±14°	16 N	Std.	0,18	**P2LAX61111**
	G1/4	Closed centre position Self centring		±12°	16 N	Std.	0,33	**P2LBX61211**
	G3/8			±16°	30 N	Std.	0,71	**P2LCX61311**
	G1/2			±16°	30 N	Std.	0,73	**P2LDX61411**
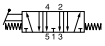	G1/8	Lever	Lever	±14°	16 N	Std.	0,18	**P2LAX81111**
	G1/4	Exhausted centre position Self centring		±12°	16 N	Std.	0,33	**P2LBX81211**
	G3/8			±16°	30 N	Std.	0,71	**P2LCX81311**
	G1/2			±16°	30 N	Std.	0,73	**P2LDX81411**
	G1/8	Lever	Lever	±14°	16 N	Std.	0,18	**P2LAX71111**
	G1/4	Pressure applied centre position Self centring		±12°	16 N	Std.	0,33	**P2LBX71211**
	G3/8			±16°	30 N	Std.	0,71	**P2LCX71311**
	G1/2			±16°	30 N	Std.	0,73	**P2LDX71411**

Tel: +45 63 12 83 00 | Email: ps@hymatik.com | www.hymatik.com | Hvidkaervej 27a, DK-5250 Odense SV, Denmark

Accessories P2LAX	Connection alternatives	Type	Weight kg	Order code
		**Multiple manifold** including seals, mounting screws, and guiding pins.	0,11	**9121658060**
	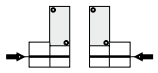	**Connection block S** including seals, mounting screws, and guiding pins. G1/4	0,15	**9121658064**
	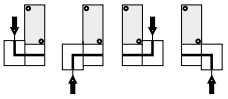	**Connection block L** including seals, mounting screws, and guiding pins. G1/4	0,15	**9121658061**
	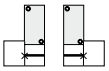	**End cover** including seals, mounting screws, and guiding pins.	0,16	**9121658066**
	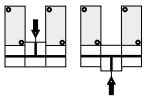	**Intermediate block T** including seals, mounting screws, and guiding pins. G1/4	0,17	**9121658062**
	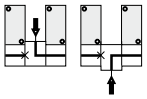	**Intermediate block L** including seals, mounting screws, and guiding pins. G1/4	0,17	**9121658065**
		**Blanking plate** including seals, mounting screws.	0,05	**9121658063**

Accessories P2LAX

	Type	Weight kg	Order code
	**Manifold bar, P2LA** including seals, mounting screws. G3/8		
	For 4 valves	0,48	**9121658075**
	For 6 valves	0,63	**9121658076**
	For 8 valves	0,80	**9121658077**
	For 10 valves	0,98	**9121658078**
	For 12 valves	1,10	**9121658079**
	For 14 valves	1,23	**9121658099**
	**Blanking plate, P2LA** for Manifold bar	0,05	**9121658063**
	**Pressure bar, P2LA** for common air supply incl. O-rings and mounting screws. G1/4		
	For 2 valves	0,13	**9121658070**
	For 4 valves	0,20	**9121658071**
	For 6 valves	0,26	**9121658072**
	For 8 valves	0,33	**9121658073**
	**Blanking plate, P2LA** for Pressure bar	0,05	**9121658074**
	**Assembly screws, P2LA** in stainless steel for valve	0,02	**9121658043**
	**Assembly screws, P2LA** in stainless steel for blanking plate	0,01	**9121658044**
	**O-ring kit, P2LA** O-rings between valve and manifold bar/ Pressure bar	0,01	**9121658046**

Accessories P2LBX

	Type	Weight kg	Order code
	**Manifold bar, P2LB, (not for P2LB with external air supply to solenoid valves)** incl. fasteners and O-ring. G3/8		
	For 2 valves	0,69	**9121594805X**
	For 4 valves	1,13	**9121594806X**
	For 6 valves	1,56	**9121594807X**
	For 8 valves	2,00	**9121594808X**
	For 10 valves	2,45	**9121594812X**
	**Blanking plate, P2LB** for Manifold bar	0,10	**9121594809X**
	**Pressure bar, P2LB** for common air supply incl. O-rings and banjo-bolts. G3/8		
	For 2 valves	0,38	**9127113301X**
	For 4 valves	0,53	**9127113302X**
	For 6 valves	0,68	**9127113303X**
	For 8 valves	0,83	**9127113304X**
	For 10 valves	0,99	**9127113305X**
	**Blanking plug, P2LB** for Pressure bar. G1/4	0,02	**9127113306X**

Tel: +45 63 12 83 00 | Email: ps@hymatik.com | www.hymatik.com | Hvidkaervej 27a, DK-5250 Odense SV, Denmark

22mm solenoid operator part numbers and spares

Solenoid coils for 22mm solenoid operators

Voltage	Order code Form A	Weight (Kg)	Order code Form B	Weight (Kg)
12V 60Hz			**P2FCB440**	0.093
24V 50/60Hz			**P2FCB442**	0.093
12V DC			**P2FCB445**	0.093
12V DC Mobile	**P2FCA447**	0.17	**P2FCB447**	0.093
24v DC Mobile	**P2FCA448**	0.17	**P2FCB448**	0.093
24V DC			**P2FCB449**	0.093
24V DC Low power			**P2FCB249**	0.093
48V DC			**P2FCB451**	0.093
110V/50Hz, 120V/60Hz			**P2FCB453**	0.093
230V/50Hz, 230V/60Hz			**P2FCB457**	0.093

Note: Mobile solenoids are only suitable for Viking Xtreme valves with 'H' specification having 0,8/1,0 operator type P2FP13H4D

Spare Solenoid Nuts

Valves requiring captured exhaust should be fitted with plastic knurled nut

Order code
P2FNP

Valves with vented exhaust are fitted with diffuser plastic nut

Order code
P2FND

Spare Solenoid Operators

Solenoid pilot operator 22mm NC, Normal duty (Max Operating pressure 10bar, Temp –10°C to +50°C)

Order code (with locking bi-stable m/o)	Weight Kg	**Order code** (with Non-locking monostable m/o)	Weight Kg
P2FP13N4C	0.05kg	**P2FP13N4D**	0.05kg

Low power pilot operator NC, Normal duty (Max Operating pressure 10bar, Temp –10°C to +50°C)

Order code (with locking bi-stable m/o)	Weight Kg	**Order code** (with Non-locking monostable m/o)	Weight Kg
P2FP13N2C	0.05kg	**P2FP13N2D**	0.05kg

Solenoid pilot operator 22mm NC, Xtreme duty (Max Operating pressure 16bar, Temp –40°C to +60°C)

Order code (with Non-locking (monostable m/o)	Weight Kg
P2FP13H4D	0.05kg

Note.
Solenoid pilot operators are fitted to the Viking valve range. Order the above part numbers for spares. The operators are supplied with mounting screws and interface 'O' rings.
Coils and connectors must be ordered separately.

Solenoid Operators - Electrical connection EN175301-803 C/ISO15217 (Ex DIN 43650C)

Solenoids 15 mm NC, standard

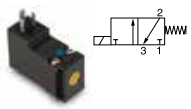

Voltage	Weight Kg	**Order code** Without manual override	Weight Kg	**Order code** Override, blue, non locking flush	Weight Kg	**Order code** Override, yellow, locking flush
12 VDC	0,038	**P2E-KV32B0**	0,038	**P2E-KV32B1**	0,038	**P2E-KV32B2**
24 VDC	0,038	**P2E-KV32C0**	0,038	**P2E-KV32C1**	0,038	**P2E-KV32C2**
48 VDC	0,038	**P2E-KV32D0**	0,038	**P2E-KV32D1**	0,038	**P2E-KV32D2**
24 VAC 50Hz	0,038	**P2E-KV31C0**	0,038	**P2E-KV31C1**	0,038	**P2E-KV31C2**
48 VAC 50/60Hz	0,038	**P2E-KV34D0**	0,038	**P2E-KV34D1**	0,038	**P2E-KV34D2**
115 VAC 50Hz/ 120 VAC 60Hz	0,038	**P2E-KV31F0**	0,038	**P2E-KV31F1**	0,038	**P2E-KV31F2**
230 VAC 50Hz/ 240 VAC 60Hz	0,038	**P2E-KV31J0**	0,038	**P2E-KV31J1**	0,038	**P2E-KV31J2**

In accordance with the EU Machine Directive, EN 983, solenoid valves with manual override should have spring-return operating arms for safety.

Tel: +45 63 12 83 00 | Email: ps@hymatik.com | www.hymatik.com | Hvidkaervej 27a, DK-5250 Odense SV, Denmark

Solenoid Connectors / Cable Plugs EN175301-803

	Description	Order code 15mm Form C/ISO15217	Order code 22mm Industrial Form B
With large headed screw suitable for mounting in inaccessible or recess position 	Standard IP65	**P8C-C**	
	24V DC LED and protection IP65	**P8C-C26C**	
	110V AC LED and protection IP65	**P8C-C21E**	
With standard screw 	Standard IP65 without flying lead	**P8C-D**	**3EV10V10**
	With LED and protection 24V AC/DC	**P8C-D26C**	**3EV10V20-24**
	With LED and protection 110V AC	**P8C-D21E**	**3EV10V20-110**
	With LED and protection 230V AC		**3EV10V20-230**
With cable 	Standard with 2m cable IP65	**P8L-C2**	
	Standard with 5m cable IP65	**P8L-C5**	
	24V AC/DC, 2m cable LED and protection IP65	**P8L-C226C**	
	24V AC/DC, 5m cable LED and protection IP65	**P8L-C526C**	**3EV10V20-24L5**
	24V AC/DC, 10m cable LED and protection IP65	**P8L-CA26C**	
	110V AC/DC, 2m cable LED and protection IP65	**P8L-C221E**	
	110V AC/DC, 5m cable LED and protection IP65	**P8L-C521E**	**3EV10V20-110L5**
	230V AC, 5m cable LED and protection IP65		**3EV10V20-230L5**

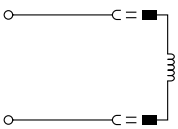

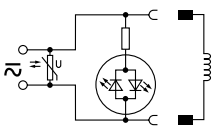

P8C-C	**P8C-D26C**	**P8L-C226C**
P8C-D	**P8C-D21E**	**P8L-C526C**
P8L-C2	**P8C-C26C**	**P8L-CA26C**
P8L-C5	**P8C-C21E**	**P8L-C221E**
3EV10V10		**P8L-C521E**
3EV290V10	**3EV10V20-24**	**3EV10V20-24L5**
	3EV10V20-110	**3EV10V20-110L5**
	3EV10V20-230	**3EV10V20-230L5**

Tel: +45 63 12 83 00 | Email: ps@hymatik.com | www.hymatik.com | Hvidkaervej 27a, DK-5250 Odense SV, Denmark

Dimensions

P2LAX... all 5/2 and 5/3 valves

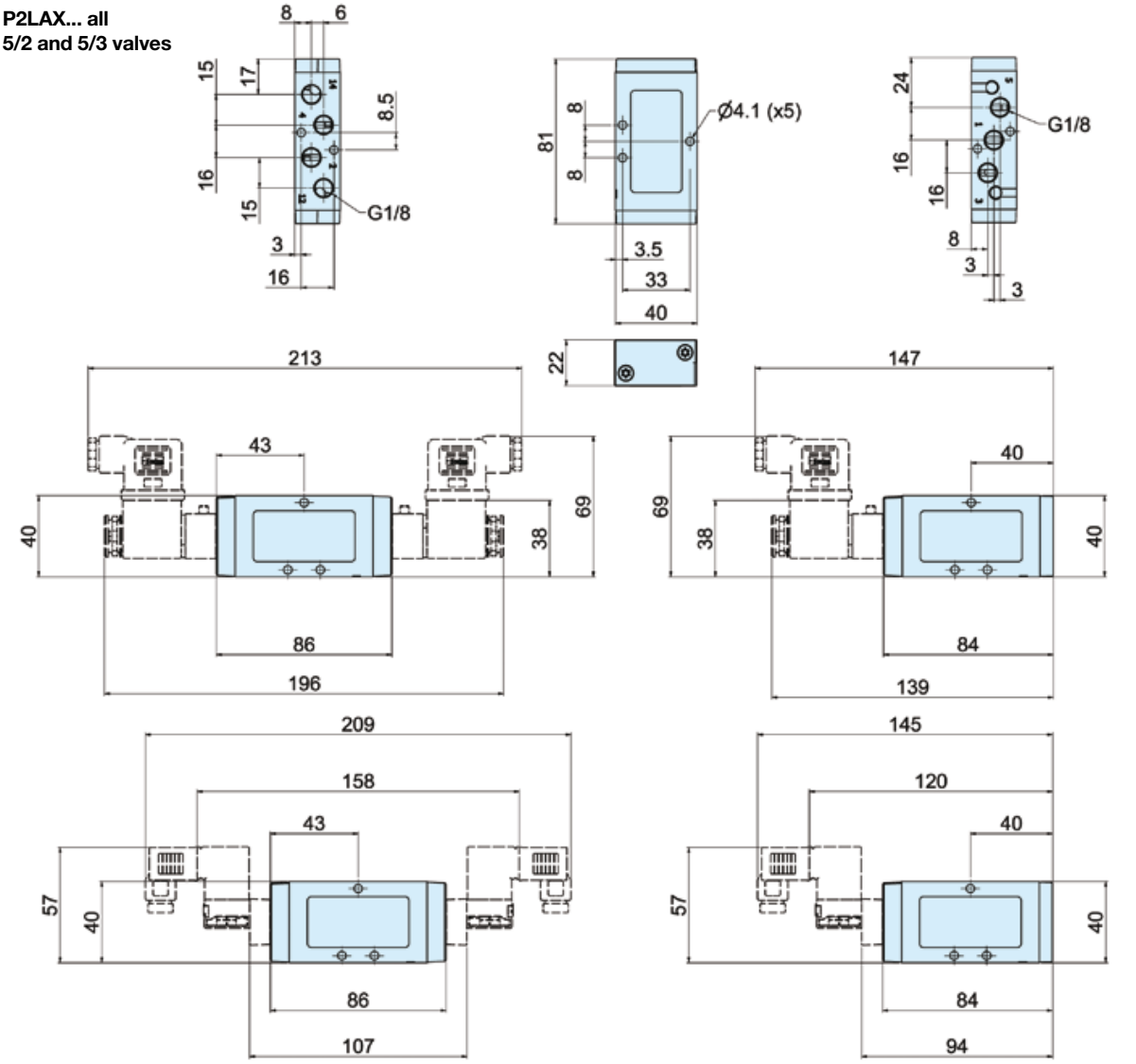

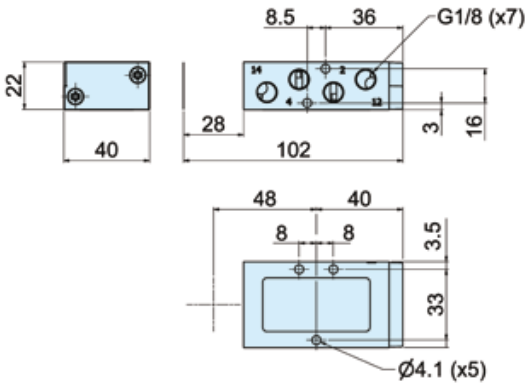

Solenoid valves
Solenoid valves and cable plugs must be ordered separately.
One pilot valve is required for each E in the valve order code.

P2LAX - Lever operated directional control valves

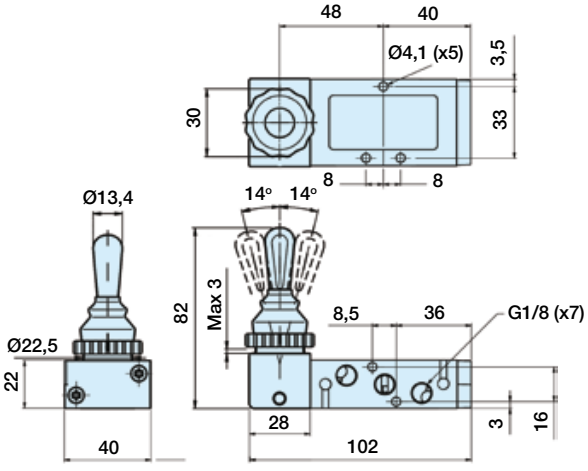

Tel: +45 63 12 83 00 | Email: ps@hymatik.com | www.hymatik.com | Hvidkaervej 27a, DK-5250 Odense SV, Denmark

Dimensions

P2LBX... all
5/2 and 5/3 valves

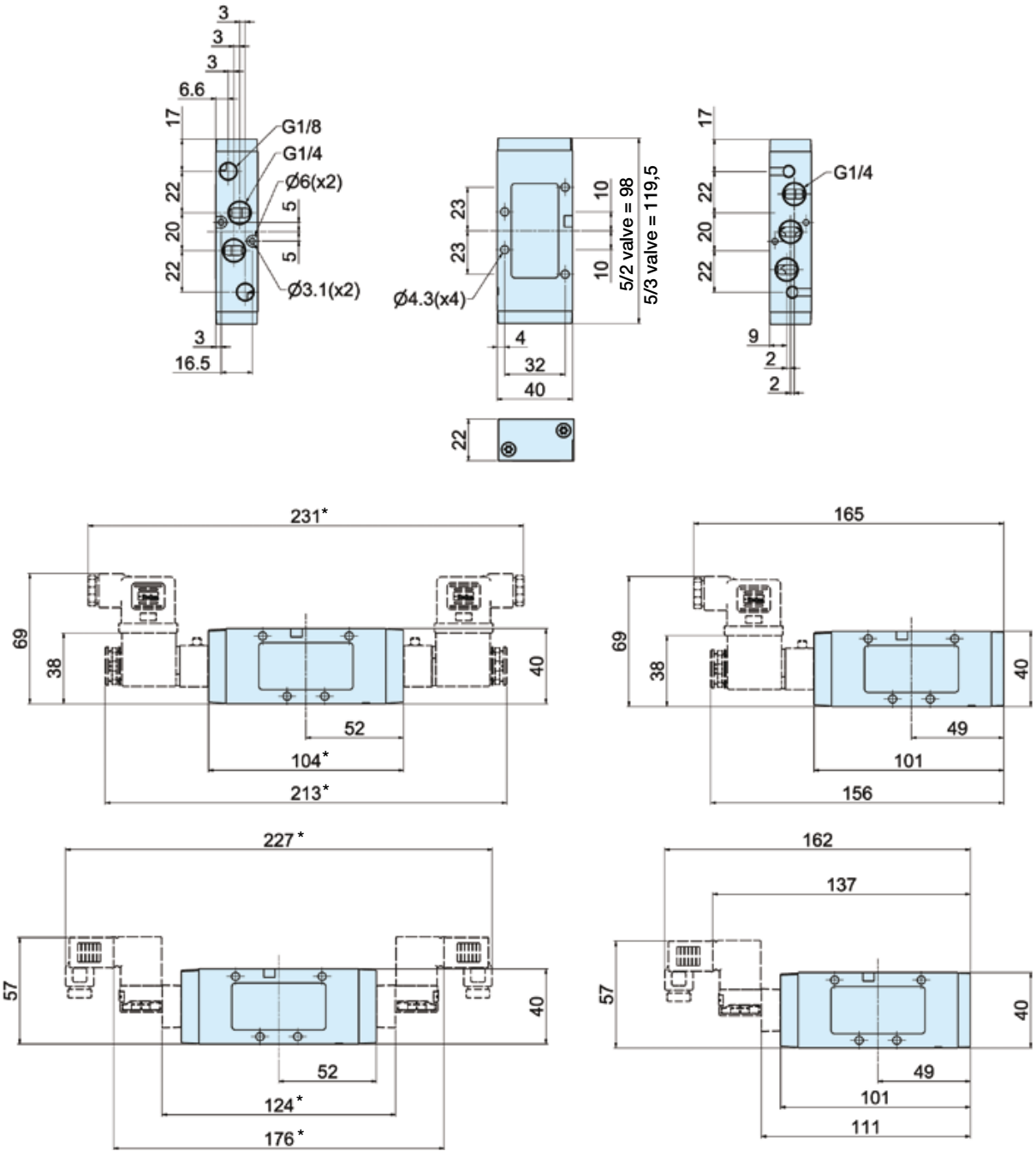

*** Note:** 5/3 valves - add 21.5mm

Solenoid valves
Solenoid valves and cable plugs must be ordered separately.
One pilot valve is required for each E in the valve order code.

Tel: +45 63 12 83 00 | Email: ps@hymatik.com | www.hymatik.com | Hvidkaervej 27a, DK-5250 Odense SV, Denmark

Dimensions

P2LBX - 5/2 Lever operated directional control valves

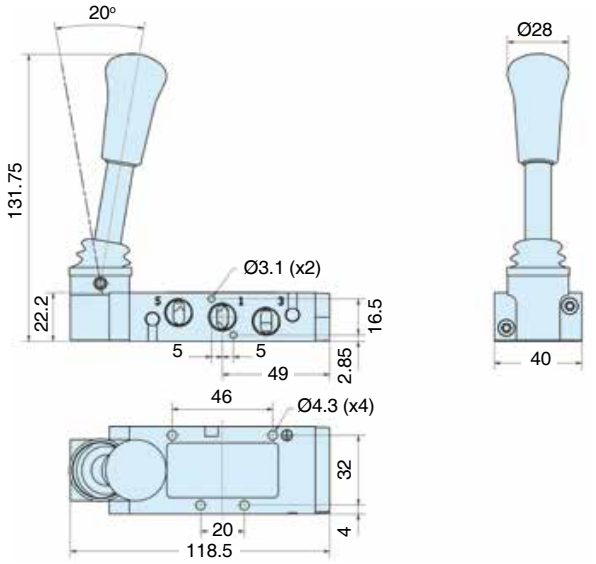

P2LBX - 5/3 Lever operated directional control valves

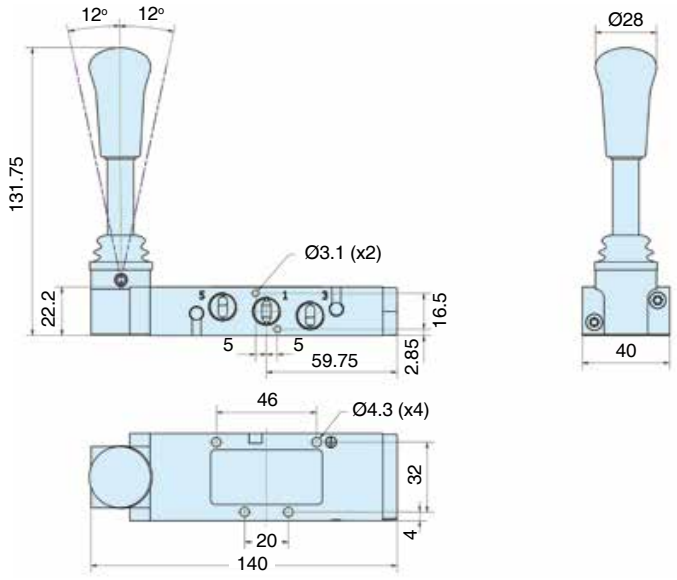

Tel: +45 63 12 83 00 | Email: ps@hymatik.com | www.hymatik.com | Hvidkaervej 27a, DK-5250 Odense SV, Denmark

Dimensions

P2LCX... all
5/2 and 5/3 valves

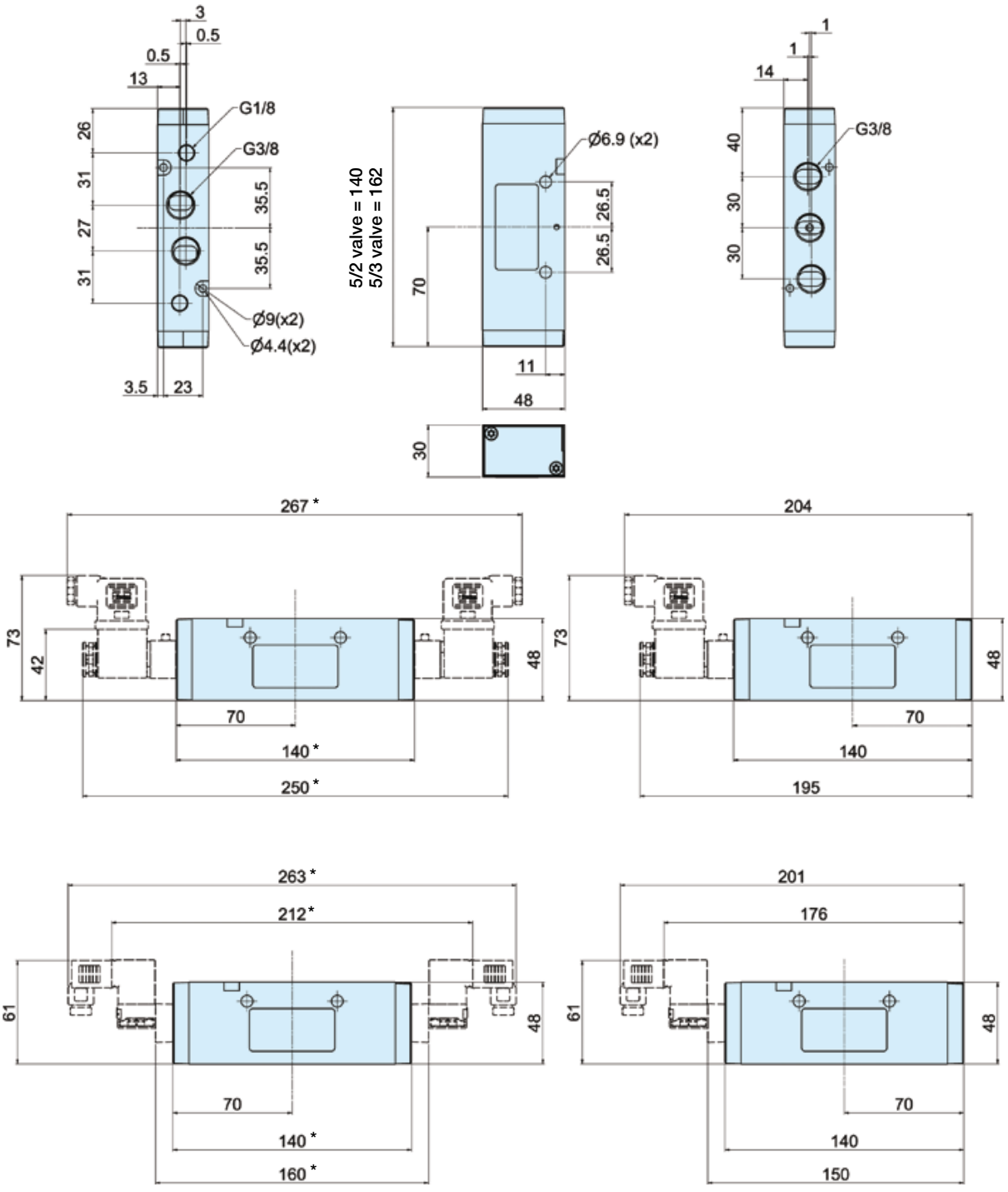

*** Note:** 5/3 valves - add 22.0mm

Solenoid valves
Solenoid valves and cable plugs must be ordered separately.
One pilot valve is required for each E in the valve order code.

Tel: +45 63 12 83 00 | Email: ps@hymatik.com | www.hymatik.com | Hvidkaervej 27a, DK-5250 Odense SV, Denmark

Dimensions

P2LCX - 5/2 Lever operated directional control valves

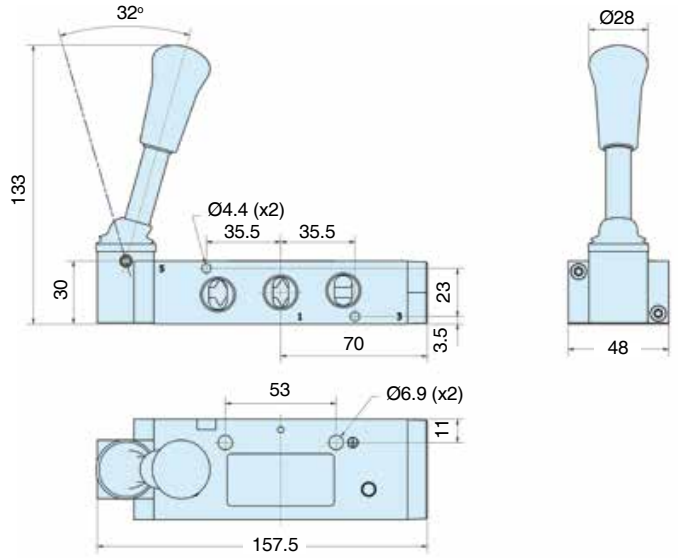

P2LCX - 5/3 Lever operated directional control valves

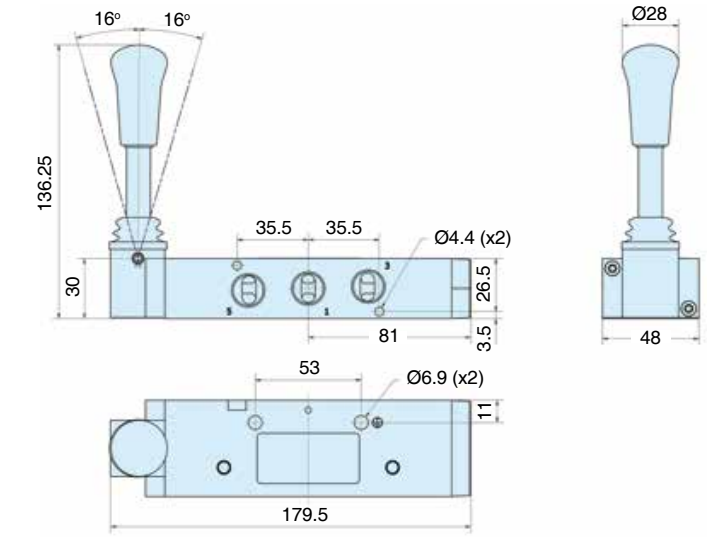

Tel: +45 63 12 83 00 | Email: ps@hymatik.com | www.hymatik.com | Hvidkaervej 27a, DK-5250 Odense SV, Denmark

Dimensions

P2LDX... all
5/2 and 5/3 valve

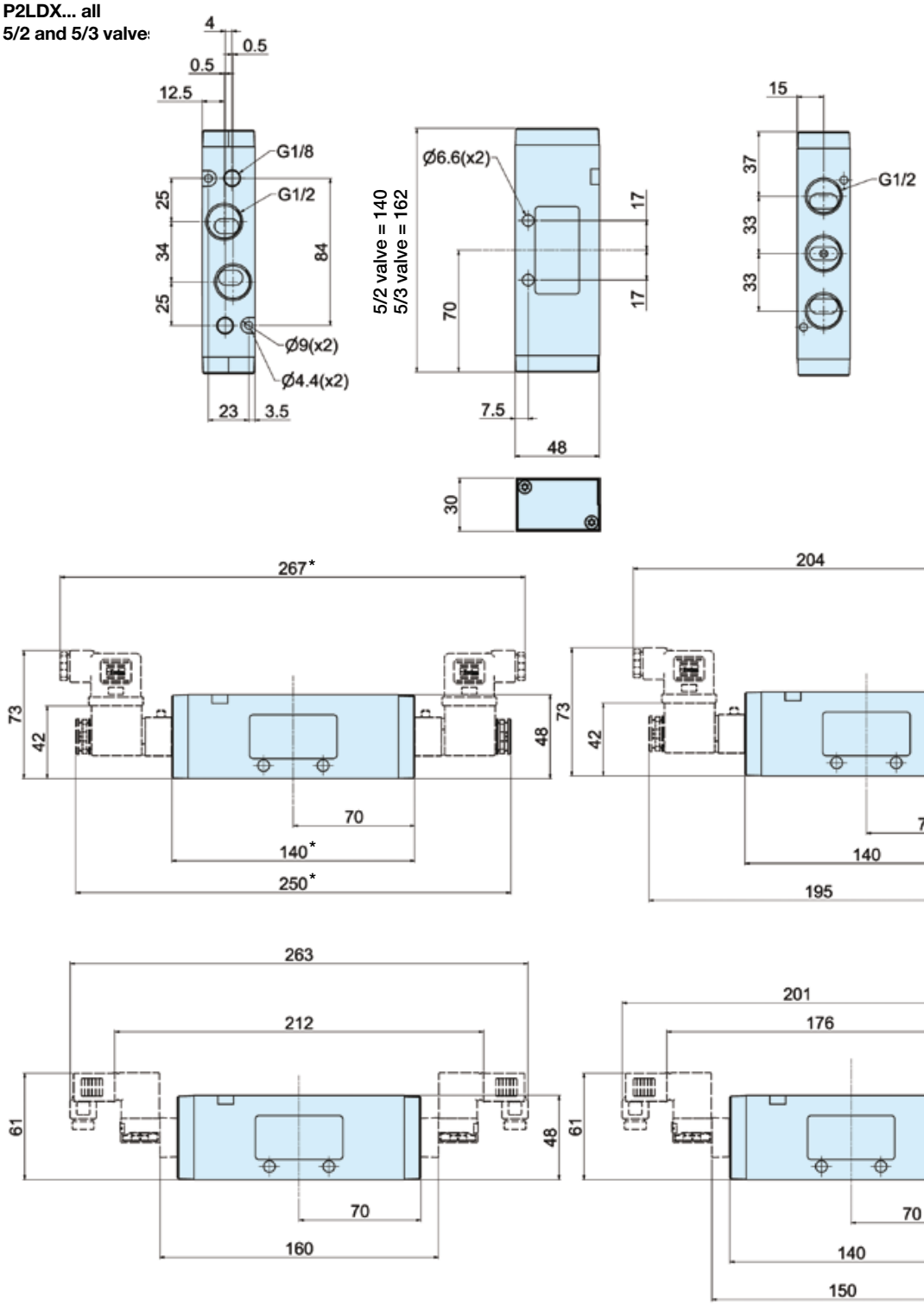

*** Note:** 5/3 valves - add 22.0mm

Solenoid valves
Solenoid valves and cable plugs must be ordered separately.
One pilot valve is required for each E in the valve order code.

Tel: +45 63 12 83 00 | Email: ps@hymatik.com | www.hymatik.com | Hvidkaervej 27a, DK-5250 Odense SV, Denmark

Dimensions

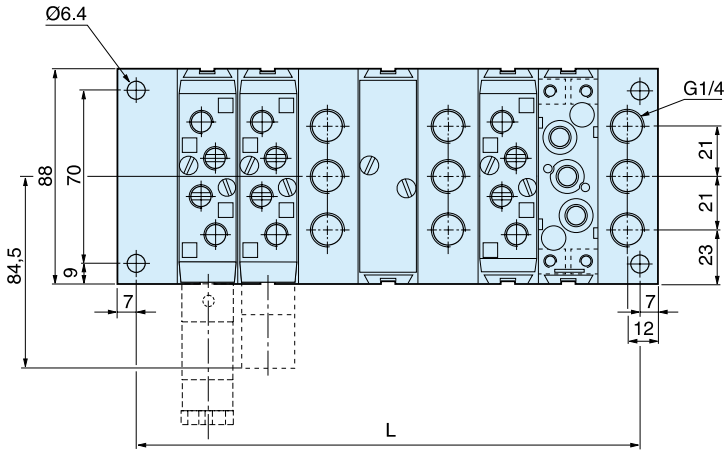

Connection block L and intermediate blocks L and T can be turned so that connection can be made from above or below.
Multiple manifolds must be fitted with the top indication line (a 10 mm long line) facing the same side on all manifolds.

L = 34 + (Number of manifolds and Intermediate blocks x 24)

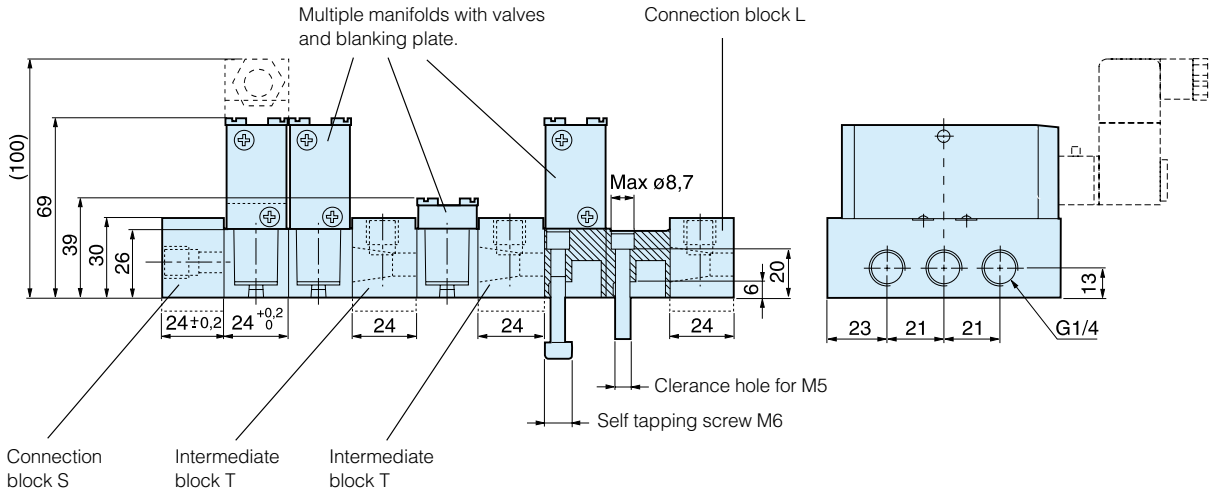

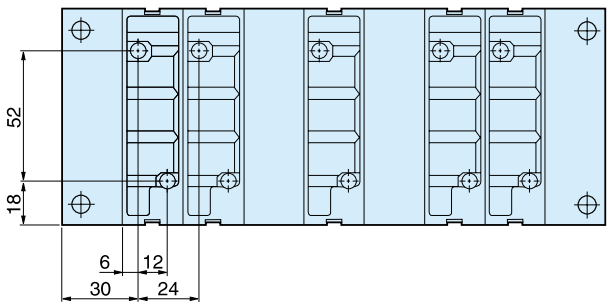

Tel: +45 63 12 83 00 | Email: ps@hymatik.com | www.hymatik.com | Hvidkaervej 27a, DK-5250 Odense SV, Denmark

Dimensions

Manifold bar, P2LA

No. of valves	L mm
4	126
6	174
8	222
10	270
12	318
14	366

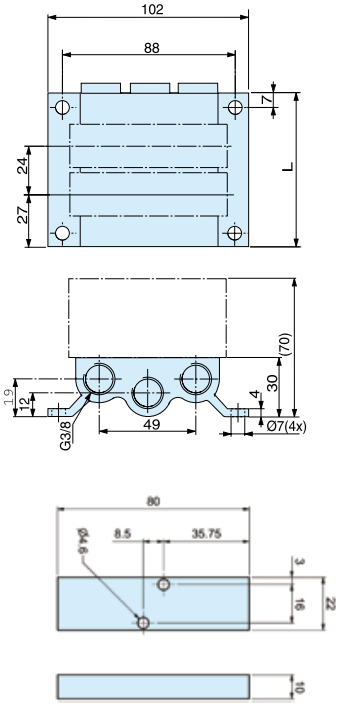

Pressure bar, P2LA

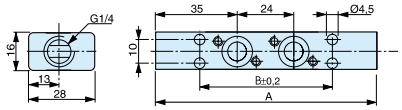

Pressure bar, P2LA

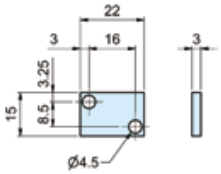

No. of valves	A mm	B mm
2	94	56
4	142	104
6	190	152
8	238	200

Manifold bar, P2LB

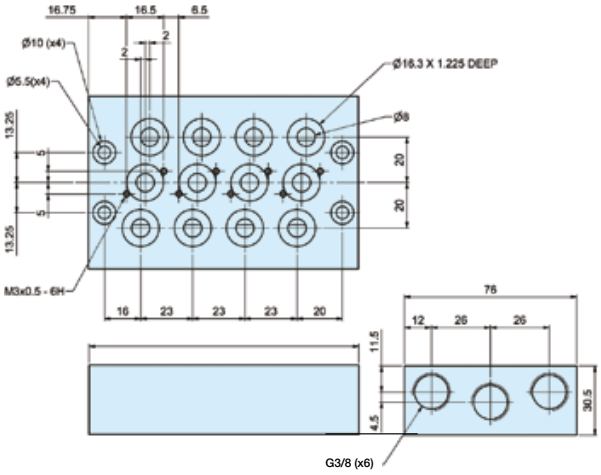

No. of valves	L mm
2	74
4	122
6	170
8	218
10	266

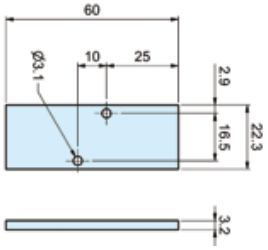

Pressure bar, P2LB

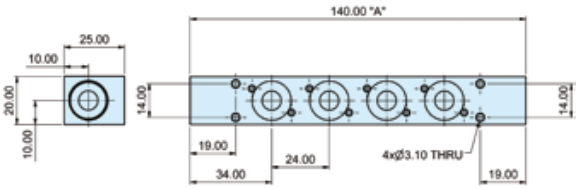

Blanking plug, P2LB

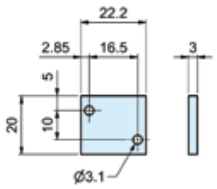

No. of valves	A mm
2	92
4	140
6	188
8	236
10	284

Tel: +45 63 12 83 00 | Email: ps@hymatik.com | www.hymatik.com | Hvidkaervej 27a, DK-5250 Odense SV, Denmark

Miniature low voltage solenoid valves, ideal for powering small cylinders in the packaging and process industries. Metal bodies with stand alone or manifold mounted versions.

- 2 sizes: M5 and 1/8"
- Compact body with large flow
- Quick response time, faster than 10ms
- Expected life time more than 50,000,000 cycles
- Low power consumption only 0.6W
- Optional multipin connector manifold
- Manual override



Operating information

Working pressure		:	1.5 to 7 bar
Working temperature		:	-5°C to +50°C
Flow (Qmax)	A05	:	260 l/min
	A12	:	850 l/min
Flow Qn	A05	:	160 l/min
	A12	:	510 L/min

For more information see www.parker.com/euro_pneumatic

Directional control valves A05R and A12R series, inline / IEM manifold - Voltage 24V DC

Description (Electrically Actuated)	Order code A05R - M5 ports	Order code A12R - G1/8 ports
5/2 single solenoid 	**A05RS251PM5MF**	**A12RS251PG1MF**
5/2 double solenoid 	**A05RD251PM5MF**	**A12RD251PG1MF**
5/3 closed centre 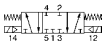	**A05RD351PM5MF**	**A12RD351PG1MF**

Directional control valves A05P/A12P series, sub-base version - Voltage 24V DC

Description (Electrically Actuated)	Order code A05P	Order code A12P
5/2 single solenoid 	**A05PS251P**	**A05PS251P**
5/2 double solenoid 	**A05PD251P**	**A05PD251P**
5/3 closed centre 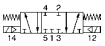	**A05PD351P**	**A05PD351P**

A05R/A12R Series Manifolds

Manifold for individual wiring threaded type



No. of stations	Port size	Size	Order Code Manifold
4	M5	A05	**MMFU4A05G**
	G1/8	A12	**MMFU4A12G**
6	M5	A05	**MMFU6A05G**
	G1/8	A12	**MMFU6A12G**
8	M5	A05	**MMFU8A05G**
	G1/8	A12	**MMFU8A12G**

A05R/A12R Series Manifolds

Manifold for individual wiring threaded type



No. of stations	Port size	Size	Order Code Manifold
4	M5	A05	**MMFS4A05GM5**
	G1/8	A12	**MMFS4A12GG1**
6	M5	A05	**MMFS6A05GM5**
	G1/8	A12	**MMFS6A12GG1**
8	M5	A05	**MMFS8A05GM5**
	G1/8	A12	**MMFS8A12GG1**

Mounting and Wiring Accessories

	Description	Order code
	Connector with lead wire black (-) red (+) 500mm	**A05PDCCL5**
	IEM blank plate kit (pack of 5)	**A05RGBP** **A12RGBP**
	Subbase blank plate kit (pack of 5)	**A05PGBP** **A12PGBP**

Tel: +45 63 12 83 00 | Email: ps@hymatik.com | www.hymatik.com | Hvidkaervej 27a, DK-5250 Odense SV, Denmark

A05R - Single and double operators - Body ported

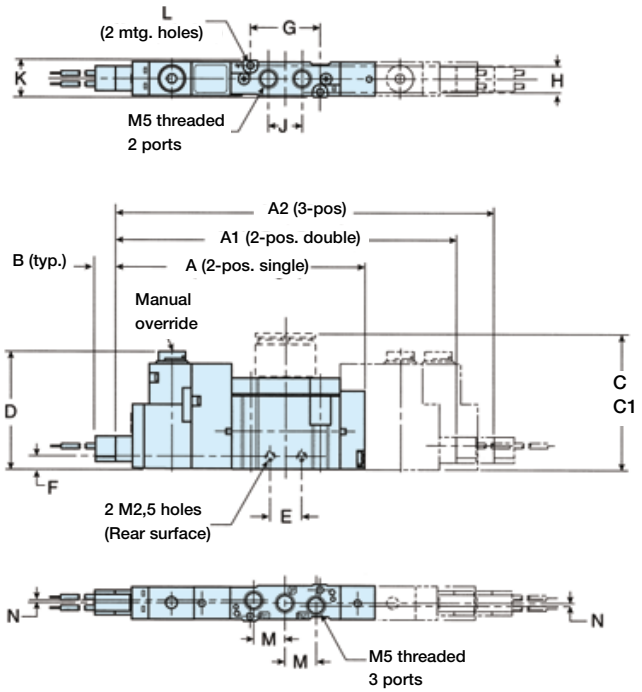

A05R - Body ported

A	A1	A2	B	C
74	100	108	6	-
C1	**D**	**E**	**F**	**G**
-	34,6	9,6	4	21
H	**J**	**K**	**L**	**M**
8,5	10,2	11,4	Ø2,1	9,5
N				
1				

Dimensions in mm

A12R - Single and double operators - Body ported

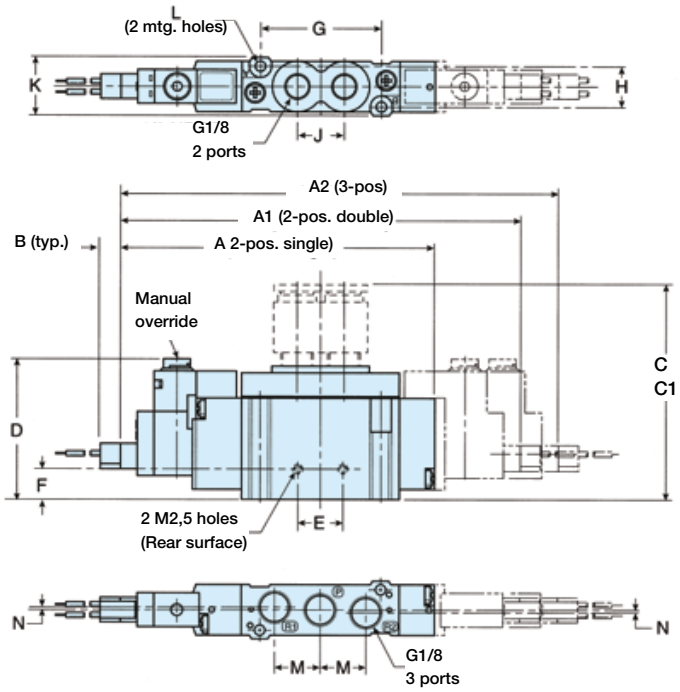

A12R - Body ported

A	A1	A2	B	C
93,5	119	130	6	-
C1	**D**	**E**	**F**	**G**
-	41,6	13,4	9	36
H	**J**	**K**	**L**	**M**
12	14	17,2	Ø3,1	13,6
N				
0,8				

Dimensions in mm

Tel: +45 63 12 83 00 | Email: ps@hymatik.com | www.hymatik.com | Hvidkaervej 27a, DK-5250 Odense SV, Denmark

A05R - Manifold - Valve body ports

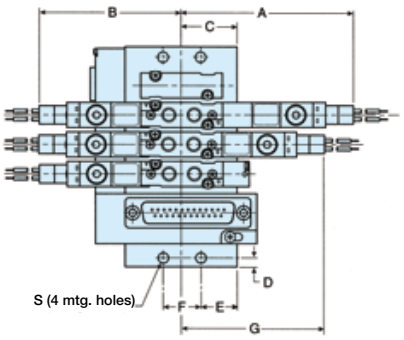

A05R - Manifold - valve body port

A	B	C	D	E
64	56	23,5	4	15,5
F	**G**	**H**	**J**	**M**
16	56	24	15,5	9,5
Q	**S**	**T**	**T1**	**U**
16	Ø4,5	34	10	12,5
U1	**V**			
10,5	63			

Dimensions in mm

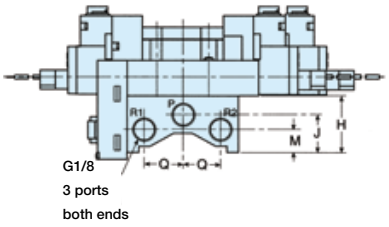

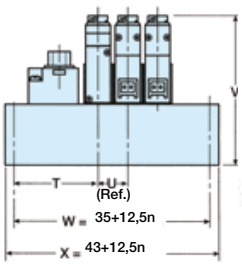

MMCU...

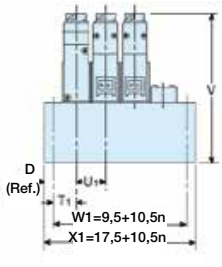

MMFU...

n = number of stations

A12R - Manifold - Valve body ports

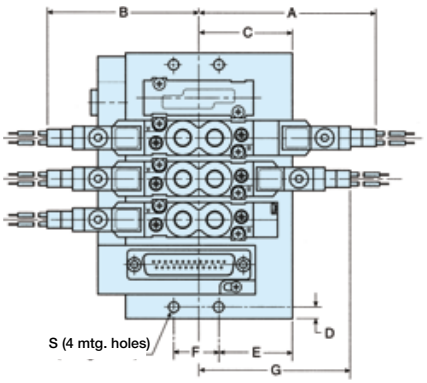

A12R - Manifold - valve body port

A	B	C	D	E
77	66	29	5	19,2
F	**G**	**H**	**J**	**M**
19,6	66	27,5	18	10,5
Q	**S**	**T**	**T1**	**U**
19,5	Ø4,5	37,5	12,2	17,5
U1	**V**			
16	70			

Dimensions in mm

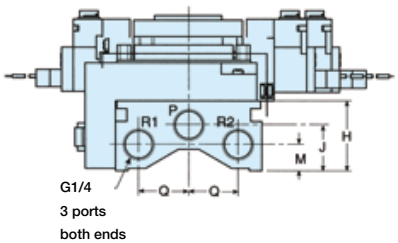

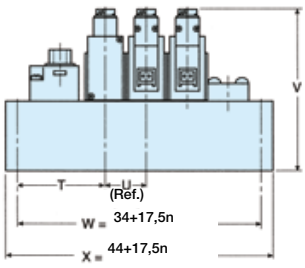

MMCU...

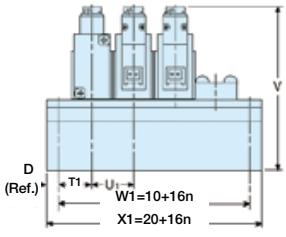

MMFU...

n = number of stations

Tel: +45 63 12 83 00 | Email: ps@hymatik.com | www.hymatik.com | Hvidkaervej 27a, DK-5250 Odense SV, Denmark

A05P - Single and double operators - Subbase

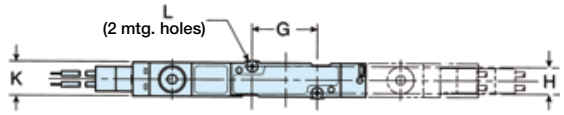

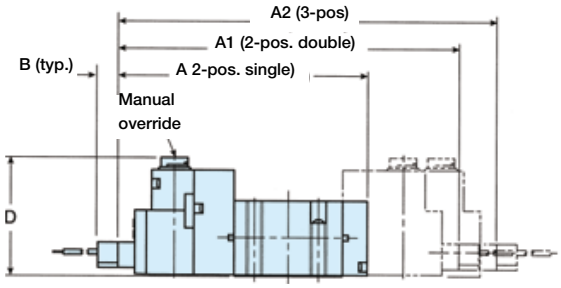

A05P - Subbase

A	A1	A2	B	D
74	100	108	6	35,1
G	**H**	**K**	**L**	
19	8,5	10	Ø2,1	

Dimensions in mm

A12P - Single and double operators - Subbase

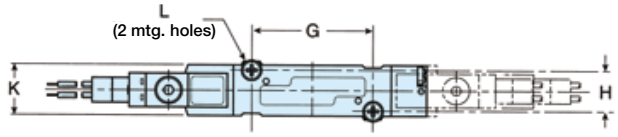

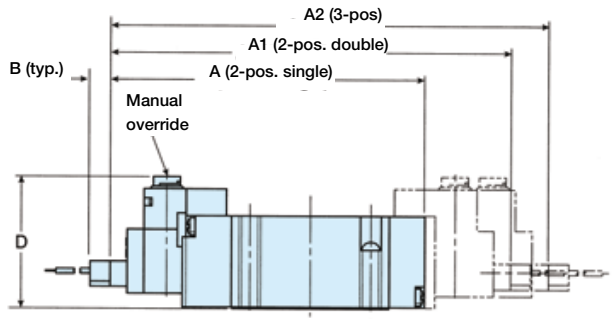

A12P - Subbase

A	A1	A2	B	D
93,5	119	130	6	39,1
G	**H**	**K**	**L**	
34	12	15	Ø3,1	

Dimensions in mm

Tel: +45 63 12 83 00 | Email: ps@hymatik.com | www.hymatik.com | Hvidkaervej 27a, DK-5250 Odense SV, Denmark

A05P - Manifold - Side ports

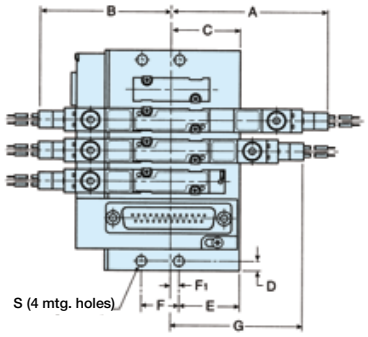

A05P - Manifold - Side ports

A	B	C	D	E
64	56	30,2	4	25,5
F	**F1**	**G**	**H**	**J**
16	4,7	56	32	28
L	**M**	**N**	**P**	**Q**
14,5	11,5	14	3	16
R	**S**	**T**	**T1**	**U**
18	Ø4,5	33,8	10	12,5
U1	**V**			
10,5	67			

Dimensions in mm

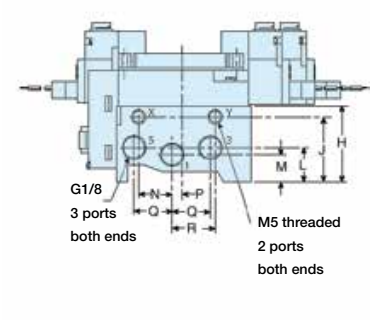

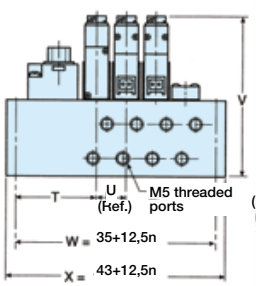

MMCS...

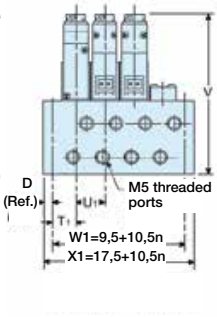

MMFS...

n = number of stations

A12P - Manifolds - Side ports

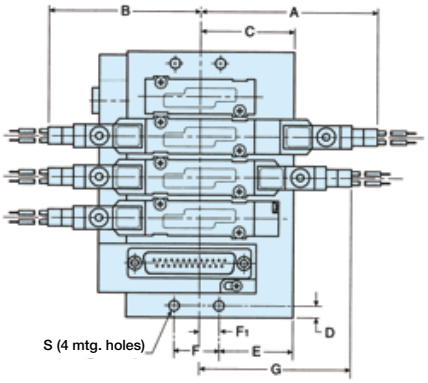

A12P - Manifold - Side ports

A	B	C	D	E
77	66	40,4	5	31,7
F	**F1**	**G**	**H**	**J**
19,6	11	66	39,5	35
K	**L**	**M**	**N**	**P**
20,5	18	14	22	1
Q	**R**	**S**	**T**	**T1**
19,5	23	Ø4,5	37,2	12,7
U	**V**			
17,5	79			

Dimensions in mm

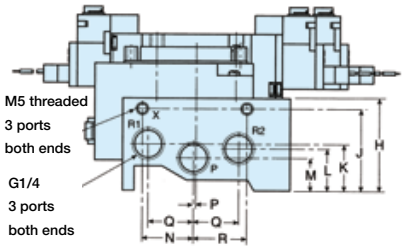

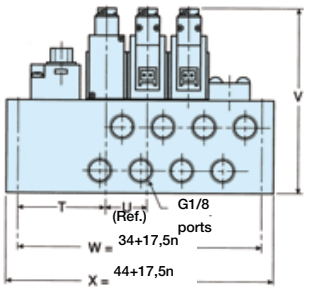

MMCS...

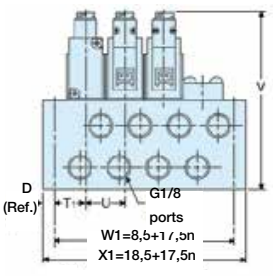

MMFS...

n = number of stations

Tel: +45 63 12 83 00 | Email: ps@hymatik.com | www.hymatik.com | Hvidkaervej 27a, DK-5250 Odense SV, Denmark

The compact design of these valves make them a popular choice for manual or mechanical operation and their modular construction permit different operators to be fitted to the actuator and return assemblies.
The Midget and Intermediate valves are designed to have balanced forces across the spool so that 3/2 valves can be piped normally open or normally closed by changing the inlet supply from port 1 to port 3.



- B 43 - 1/8" ported, B53 - 1/4 ported
- Manual and mechanical operation
- Stainless steel spools
- Viton seals
- 3/2, 5/2, 3/3 and 5/3 versions.
- Integral mounting holes

Operating information

Type	Spool valves	
Style	Body ported	
Port size	G1/8 & G1/4	
Mounting	Any plane	
Pressure range	Vacuum to 10 bar	
Temperature range	-10°C to +80°C	
Flow acc. (to ISO 6358)		
	Midget B43 series	**Intermediate B53 series**
	c = 1.13 Nl/s x bar	c = 3.69 Nl/s x bar
	b = 0.36	b = 0.33
	Qn = 5.5 l/s	Qn = 17.5 l/s
	Qmax = 9.0 l/s	Qmax = 29 l/s
	Cv = 0.24	Cv = 1.02

Material specification

Valve body	Aluminium
Spool	Stainless steel
Seal spacers	Zinc die cast
Seals	Viton
Spring housing	Nylon
Spring	Zinc plated
End covers	Zinc die cast
Actuators	Zinc die cast
End cover screws	Zinc plated

Working medium, air quality

Working medium: Dry, filtered compressed air to ISO 8573-1 class 3.4.3.

Flow characteristics

Flow capacities in accordance with ISO 6358
The flow curves shown below are typical.

Midget B43 series valves

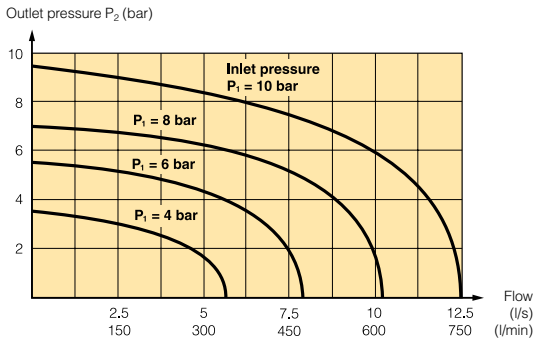

Intermediate B53 series valves

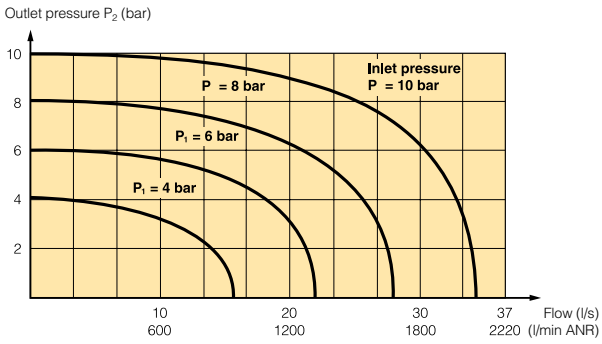

Tel: +45 63 12 83 00 | Email: ps@hymatik.com | www.hymatik.com | Hvidkaervej 27a, DK-5250 Odense SV, Denmark

Midget mechanically operated valves, B43 series - G1/8

Symbol	Type	Actuator Button	Return	Operating force at 6 bar, N	Order code
	3/2	Plunger	Spring	36	**B43003CS**
	3/2	Plunger	Air	14	**B43003CP**
	5/2	Plunger	Spring	36	**B43004CS**
	5/2	Plunger	Air	14	**B43004CP**
	3/2	Roller Lever	Spring	20	**B43003RS**
	3/2	Roller Lever	Air	7	**B43003RP**
	5/2	Roller Lever	Spring	20	**B43004RS**
	5/2	Roller Lever	Air	7	**B43004RP**
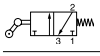	3/2	One way lever	Spring	20	**B43003RTS**
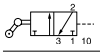	3/2	One way roller lever	Air	7	**B43003RTP**
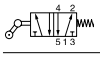	5/2	One way roller lever	Spring	20	**B43004RTS**
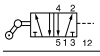	5/2	One way roller lever	Air	7	**B43004RTP**

Intermediate mechanically operated valves, B53 series - G1/4

Symbol	Type	Actuator Button	Return	Operating force at 6 bar, N	Order code
	3/2	Plunger	Spring	53	**B53003CS**
	3/2	Plunger	Air	27	**B53003CP**
	5/2	Plunger	Spring	53	**B53004CS**
	5/2	Plunger	Air	27	**B53004CP**
	3/2	Roller	Spring	53	**B53003RS**
	3/2	Roller	Air	27	**B53003RP**
	5/2	Roller	Spring	53	**B53004RS**
	5/2	Roller	Air	27	**B53004RP**

Midget manually operated valves, B43 series - G1/8

Symbol	Type	Actuator Button	Return	Operating force at 6 bar, N	Order code
	3/2	Black	Spring	36	**B43003BXS**
	3/2	Black	Button	13	**B43003HXS**
	5/2	Black	Spring	36	**B43004BXS**
	5/2	Black	Button	13	**B43004HXS**
	3/2	Black	Air	13	**B43003BXP**
	3/2	Black	Air or Button	13	**B43003HXP**
	5/2	Black	Air	13	**B43004BXP**
	5/2	Black	Air or Button	13	**B43004XHP**
	3/2	Lock down lever	Spring	9	**B43003LS**
	3/2	Lock down lever	Spring	9	**B43004LS**
	3/2	Lock down lever	Air	3	**B43003LP**
	3/2	Lock down lever	Air	3	**B43004LP**

Intermediate manually operated valves, B53 series - G1/4

Symbol	Type	Actuator Button	Return	Operating force at 6 bar, N	Order code
	3/2	Black	Spring	53	**B53003HXS**
	3/2	Black	Button	27	**B53003HX**
	3/2	Black	Air	27	**B53003HXP**
	5/2	Black	Spring	53	**B53004HXS**
	5/2	Black	Button	27	**B53004HX**
	5/2	Black	Air	27	**B53004HXP**
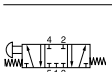	5/3	Button closed centrer position	Button self centring	13	**B53005HXX**
	5/3	Button vented centrer position	Air self centring	13	**B53004HXY**
	5/3	Button pressurised centrer position	Air self centring	13	**B53004HXZ**

Tel: +45 63 12 83 00 | Email: ps@hymatik.com | www.hymatik.com | Hvidkaervej 27a, DK-5250 Odense SV, Denmark

Intermediate lever operated valve, B53 series - G1/4

Symbol	Type	Actuator Button	Return	Operating force at 6 bar, N	Order code
	3/2	Lever	Spring	14	**B53003LS**
	3/2	Lever	Air	9	**B53003LP**
	3/2	Lever	Lever	9	**B53003LT**
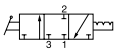	3/3	Lever closed centre position	Lever	9	**B53003L**
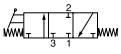	3/3	Lever closed centre position	Lever self centring	14	**B53003LX**
	5/2	Lever	Spring	14	**B53004LS**
	5/2	Lever	Air	14	**B53004LP**
	5/2	Lever	Lever	14	**B53004LT**
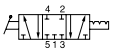	5/3	Lever closed centre position	Lever held in three positions	9	**B53004L**
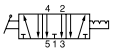	5/3	Lever vented centre position	Lever held in three positions	9	**B53004LW**
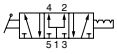	5/3	Lever pressurised centre position	Lever held in three positions	9	**B53004LN**
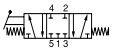	5/3	Lever closed centre position	Lever self centring	14	**B53004LX**
	5/3	Lever vented centre position	Lever self centring	14	**B53004LY**
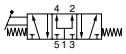	5/3	Lever pressurised centre position	Lever self centring	14	**B53004LZ**

Mounting kit

	Panel mounting kit Kit includes panel plate and M5 counter sunk head screws	**M53004L-10A**

Midget foot operated valves, B43 series - G1/8

Symbol	Type	Actuator Button	Return	Operating force at 6 bar, N	Order code
	3/2	Foot pedal	Spring	16	**B43003FS**
	5/2	Foot pedal	Spring	16	**B43004FS**

Intermediate foot operated valves, B53 series - G1/4

Symbol	Type	Actuator Button	Return	Operating force at 6 bar, N	Order code
Single pedal operated					
	3/2	Foot pedal	Spring	95	**B53003FS**
	5/2	Foot pedal	Spring	95	**B53004FS**
Rocker pedal operated					
	3/2	Foot pedal	Foot pedal	18	**B53003G**
	5/2	Foot pedal	Foot pedal	18	**B53004G**
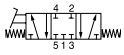	5/3	Foot pedal closed centre position	Foot pedal self centring	18	**B53004GX**
	5/3	Foot pedal vented centre position	Foot pedal self centring	18	**B53004GY**
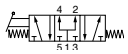	5/3	Foot pedal pressurised centre position	Foot pedal self centring	18	**B53004GZ**

Accessories

	Foot guard kit	**3117**

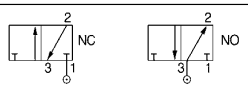

All 3/2 type B43 & B5/3 valves can be connected either as normally closed 3/2 valve (NC) or normally open 3/2 valve (NO) as required, by connecting the primary air supply to port 1 or port 3

Dimensions, G1/8 ported spool valves

All dimensions in mm unless otherwise stated

Mechanically operated valves

3/2 valves

Plunger operated spring return

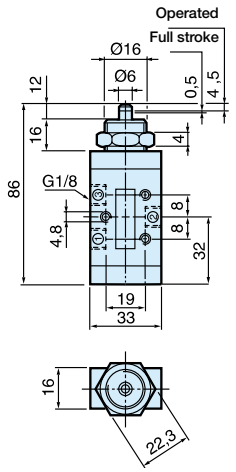

5/2 valves

Plunger operated spring return

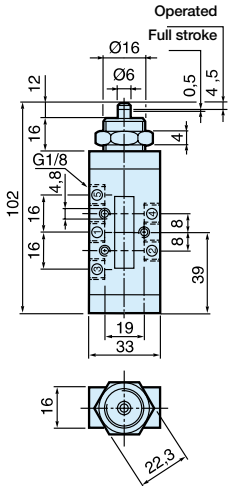

3/2 valves

Roller operated spring return

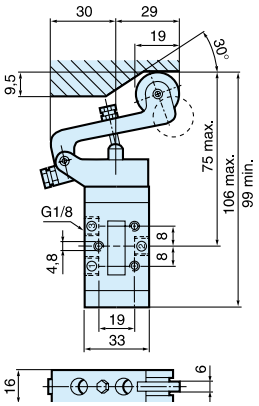

One way roller trip operate spring return

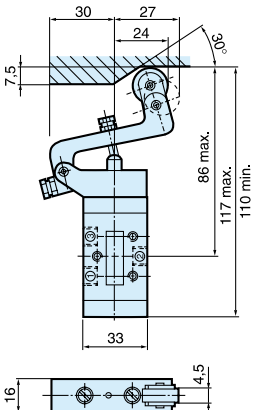

5/2 valves

Roller operated spring return

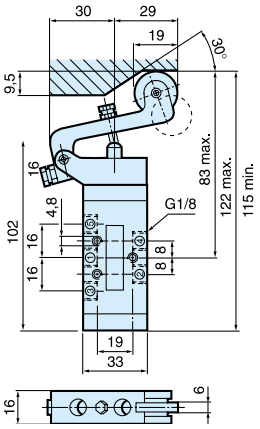

One way roller trip operate spring return

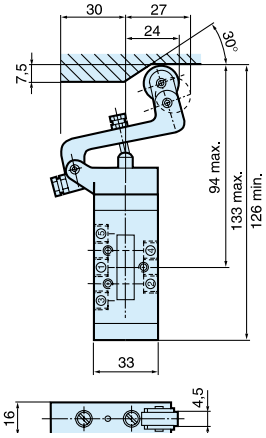

Air Pilot Return

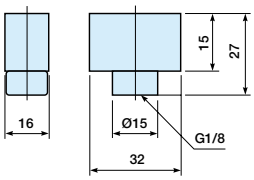

Optional foot mounted - Spring return housing

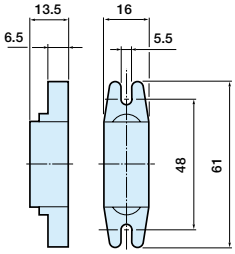

Tel: +45 63 12 83 00 | Email: ps@hymatik.com | www.hymatik.com | Hvidkaervej 27a, DK-5250 Odense SV, Denmark

Dimensions, G1/8 ported spool valves

All dimensions in mm unless otherwise stated

Manually operated valves

3/2 valves

Button operated spring return or button returned

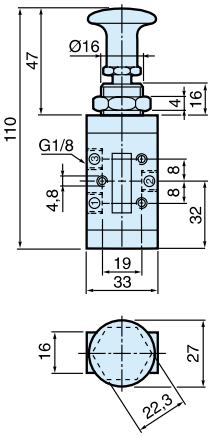

Lock down lever operated spring return

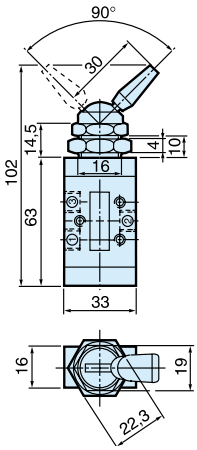

5/2 valves

Button operated spring return or button returned

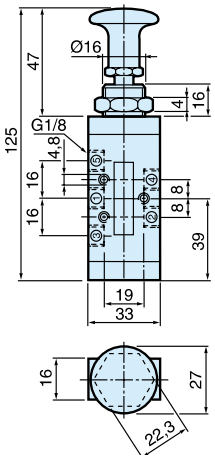

Lock down lever operated spring return

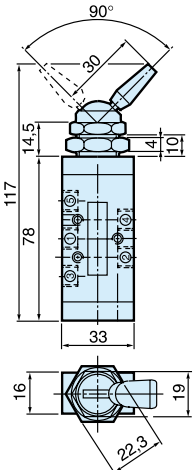

3/2 valves

Foot pedal operated spring return

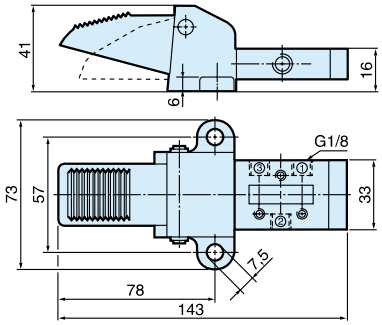

5/2 valves

Foot pedal operated spring return

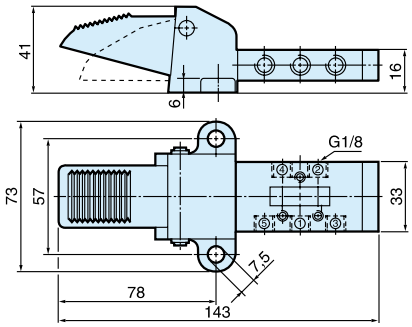

Air Pilot Return

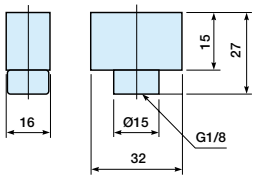

Optional foot mounted - Spring return housing

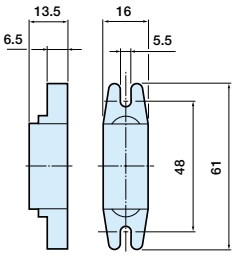

Tel: +45 63 12 83 00 | Email: ps@hymatik.com | www.hymatik.com | Hvidkaervej 27a, DK-5250 Odense SV, Denmark

Dimensions, G1/4 ported spool valves

All dimensions in mm unless otherwise stated

Mechanically operated valves

3/2 valves

Plunger operated spring return

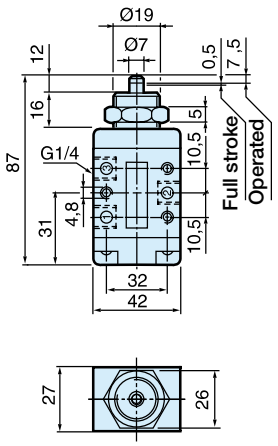

5/2 valves

Plunger operated spring return

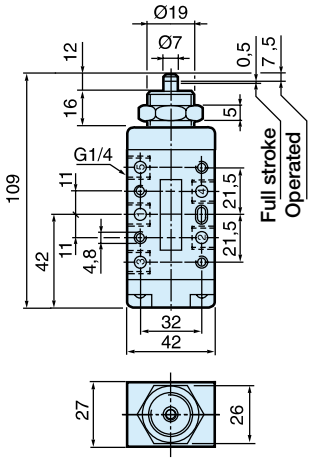

3/2 valves

Roller operated spring return

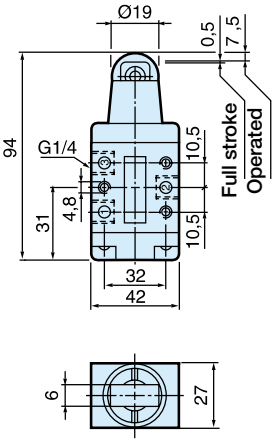

5/2 valves

Roller operated spring return

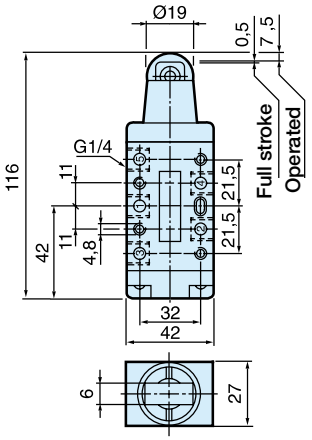

Air Pilot Return

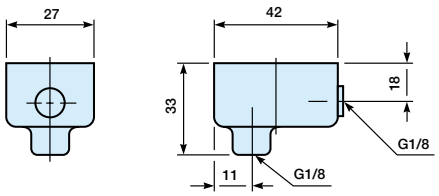

Dimensions, G1/4 ported spool valves

All dimensions in mm unless otherwise stated

Manually operated valves

3/2 valves

Button operated spring return
or button returned

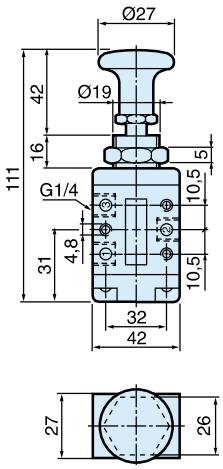

5/2 valves

Button operated spring return
or button returned

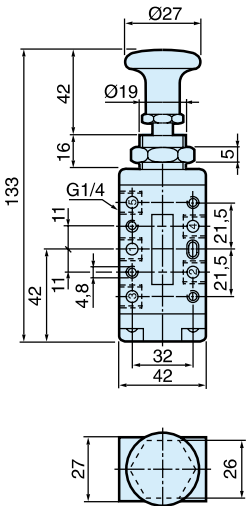

3/2 valves

Lever operated

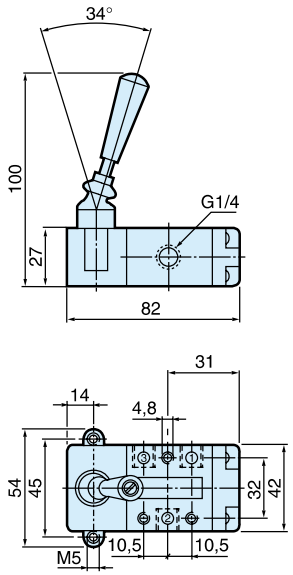

5/2 valves

Lever operated

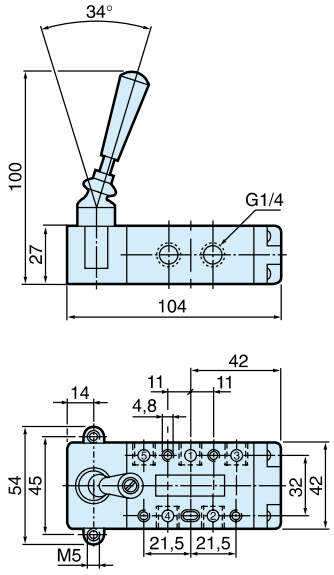

Air Pilot Return

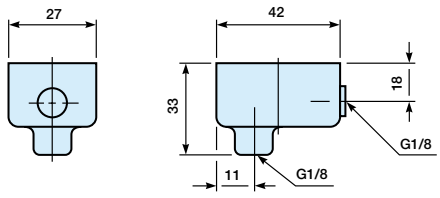

Parker Hannifin Corporation
Pneumatic Division - Europe

Tel: +45 63 12 83 00 | Email: ps@hymatik.com | www.hymatik.com | Hvidkaervej 27a, DK-5250 Odense SV, Denmark

Dimensions, G1/4 ported spool valves

All dimensions in mm unless otherwise stated

Manually operated valves

3/3 valves (Self centring)

Lever operated

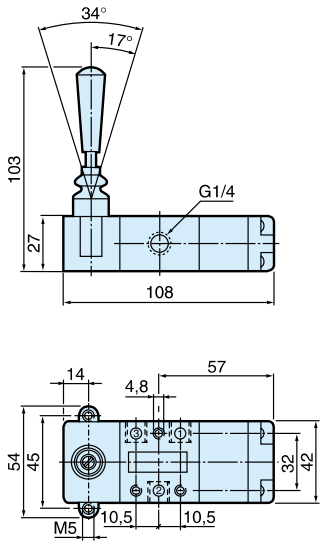

5/3 valves (Self centring)

Lever operated

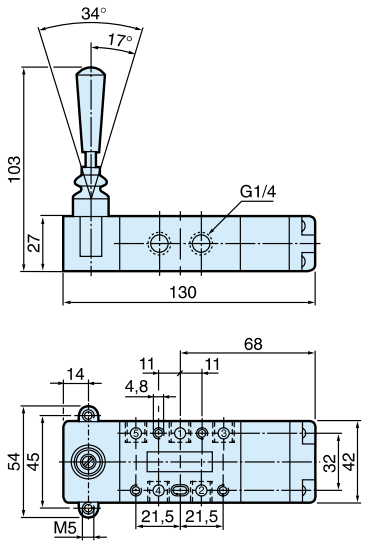

3/3 valves (3 positions)

Lever operated

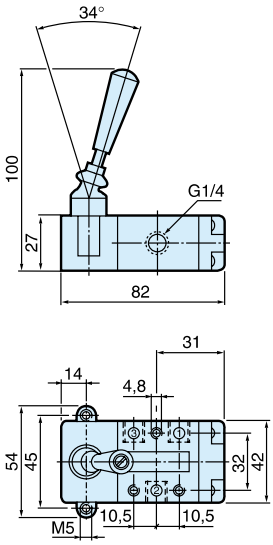

5/3 valves (3 positions)

Lever operated

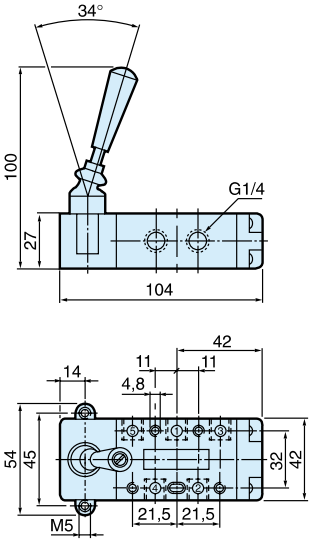

Air Pilot Return

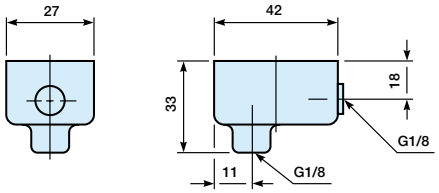

Tel: +45 63 12 83 00 | Email: ps@hymatik.com | www.hymatik.com | Hvidkaervej 27a, DK-5250 Odense SV, Denmark

Dimensions, G1/4 ported spool valves

All dimensions in mm unless otherwise stated

Manually operated valves

3/2 valves

Foot pedal operated spring return

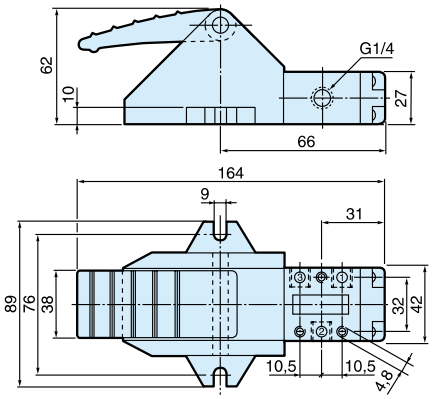

5/2 valves

Foot pedal operated spring return

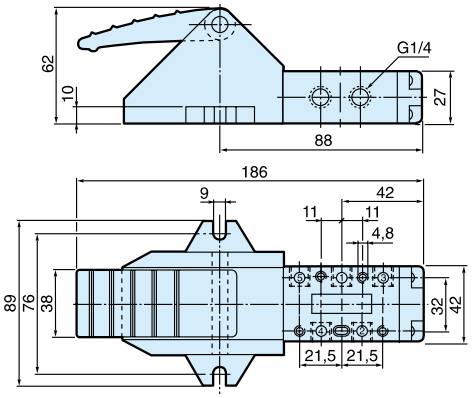

3/2 valves

Foot pedal operated

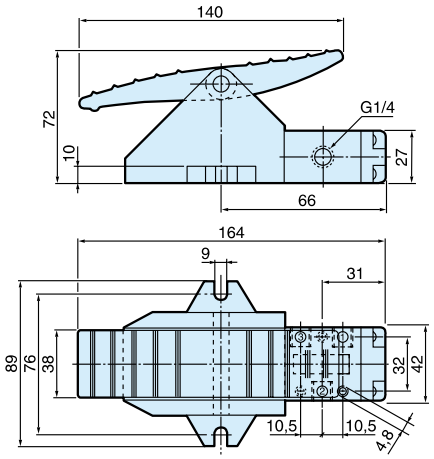

5/2 valves

Foot pedal operated

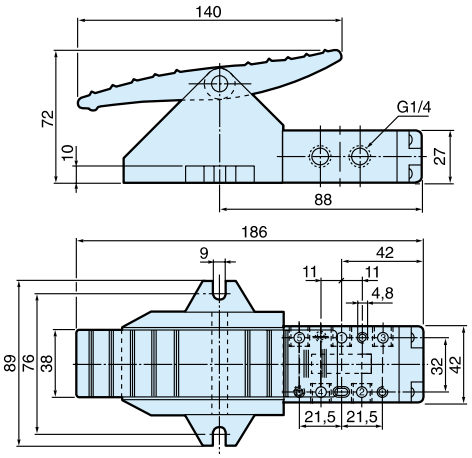

5/3 valves

Foot pedal operated

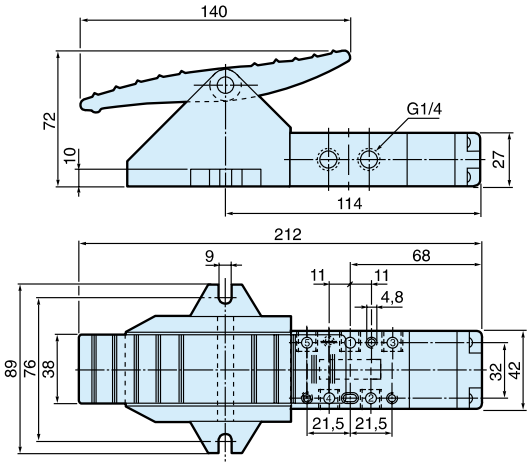

Foot guard kit

3117

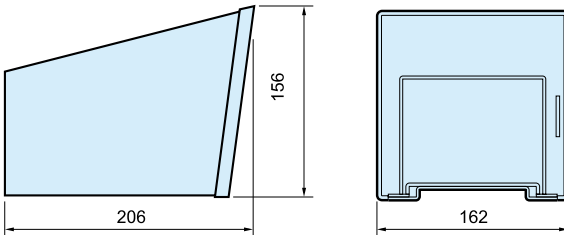

Service and Replacement Parts

B43 Series Manually Operated Valves



Order code	Actuator	Replacement actuator	Repair kit
B43003BXS	Button	43004BX-100	Body seal 43007A
B43004BXS	Button		
B43004HXS	Button, Push/Pull	43004H-100	
B43003LS	Lockdown lever	43004L-200	
B43004LS	Lockdown lever		

B53 Series Manually Operated Valves



Order code	Actuator	Replacement actuator	Repair kit
B53003HXS	Button	53004HX-100	Body seal 53007
B53004HXS	Button		
B53003HX	Button, Push/Pull		
B53004HX	Button, Push/Pull		
B53004HXX	Button, Self centring		
B53004HXY	Button, Self centring		
B53004HXZ	Button, Self centring		
B53003FS	Foot	53004F-100	
B53004FS	Foot		
B53003LS	Lever	53004L-198	Body seal 53007 Lever kit 53004L-300R
B53004LS	Lever		
B53003LT	Lever, 2 positions	53004L-196	
B53004LT	Lever, 2 positions		
B53004L	Lever, 3 positions	53004L-100	
B53004LW	Lever, 3 positions		
B53004LX	Lever, Self centring	53004L-198	
B53004LY	Lever, Self centring		

B43 Series Mechanically Operated Valves



Order code	Actuator	Replacement actuator	Repair kit
B43003CS	Plunger	43004C-100	Body seal 43007A
B43004CS	Plunger		
B43003RS	Roller Lever	43004R-200	
B43004RS	Roller Lever		

B53 Series Mechanically Operated Valves



Order code	Actuator	Replacement actuator	Repair kit
B53003CS	Plunger	53004C-100	Body seal 53007
B53004CS	Plunger		
B53003RS	Roller	53004R-100	
B53004RS	Roller		

Tel: +45 63 12 83 00 | Email: ps@hymatik.com | www.hymatik.com | Hvidkaervej 27a, DK-5250 Odense SV, Denmark

Rugged brass bodies with excellent corrosion resistance make these valves the ideal choice for arduous applications. Large and robust manual actuators are available together with air pilot actuators.

- Rugged valves for heavy duty applications
- Large and robust actuators for easy operation
- Excellent corrosion resistance
- Integral mounting holes
- Panel mounting versions



Operating information

Working temperature	-40 °C to +70 °C
Working pressure	Max 10 bar
Flow (Qmax):	380 l/min

For more information see www.parker.com/euro_pneumatic

Push button valves, VA13 Series - G1/8

Symbol	Actuator	Return	Operating force at 6 bar, N	Mounting	Order code
Hand actuated					
	Flush-Push button, red	Spring	32,5	Panel	**VA13-HIS4**
	Flush-Push button, black	Spring	32,5	Panel	**VA13-HIS4A06**
	Hand lever Held in 2 positions	Hand lever	8	Panel	**VA13-HB24**
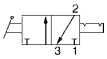	Hand lever Held in 2 positions	Hand lever	8	Side	**VA13-HB2**
	Button, red, 2 positions	Button	3	Panel	**VA13-KL24**
	Button, red	Spring	31,5	Panel	**VA13-KS4**
	Button, red, 2 positions	Button	3	Side	**VA13-KL2**
	Button, red	Spring	31,5	Side	**VA13-KS**
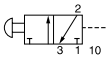	Button, red, 2 positions	Knob/ Air signal	6	Side	**VA13-KL2A**

Accessories for VA13/15HI... Series valves



Description	Order code
Diaphragm, black	**9127359331**
Diaphragm, yellow	**9127359332**
Mounting ring	**9127359334**

Push button valves, VA15 Series - G1/8 connection

Symbol	Actuator	Return	Operating force at 6 bar, N	Mounting	Order code
Hand actuated					
	Flush-Push button, red	Spring	34,5	Panel	**VA15-HIS4**
	Hand lever Held in 2 positions	Hand lever	9	Panel	**VA15-HB24**
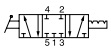	Hand lever Held in 3 positions closed centre position	Hand lever	9	Panel	**VA15-HB34**
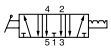	Hand lever Held in 3 positions vented centre position	Hand lever	9	Panel	**VA15-XHB34**
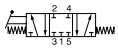	Hand lever 3 positions closed centre position	Hand lever	9	Panel	**VA15-HC4**
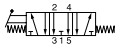	Hand lever 3 positions vented centre position	Hand lever self centring	9	Panel	**VA15-XHC4**
	Hand lever Held in 2 positions	Hand lever	9	Side	**VA15-HB2**
	Button, red red 2 positions	Button	5	Panel	**VA15-KL24**
	Button, red, 2 positions	Button	5	Side	**VA15-KL2**
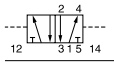	Air signal	Air signal	3/3	Side	**VA15-AA**
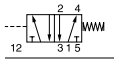	Air signal	Spring	4/-	Side	**VA15-AS**

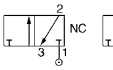

All 3/2 type VA13 valves can be connected either as normally closed 3/2 valve (NC) or normally open 3/2 valve (NO) as required, by connecting the primary air supply to port 1 or port 3

Parker Hannifin Corporation
Pneumatic Division - Europe

Tel: +45 63 12 83 00 | Email: ps@hymatik.com | www.hymatik.com | Hvidkaervej 27a, DK-5250 Odense SV, Denmark

Dimensions

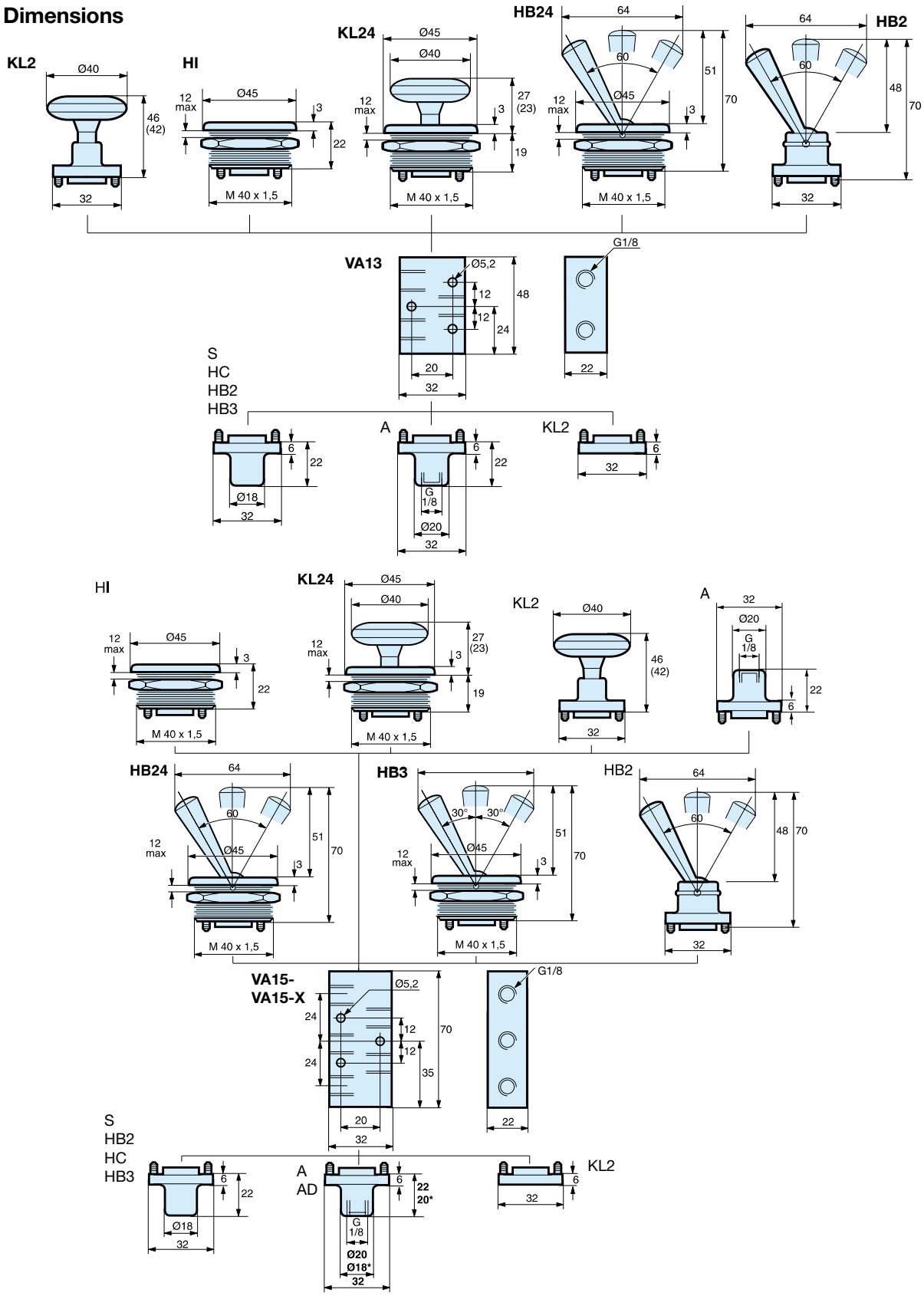

Tel: +45 63 12 83 00 | Email: ps@hymatik.com | www.hymatik.com | Hvidkaervej 27a, DK-5250 Odense SV, Denmark

Heavy duty poppet valves
2/2 & 3/2 - G3/8" & G1/2"



These valves use the well proven poppet principle to give high flow rates with short valve travel, both the 2/2 and 3/2 valves in the range are available in G3/8" and G1/2" port sizes. This means that each actuator is available in four configurations i.e. 3/8" ports 2/2 or 3/2 and G1/2" ports 2/2 or 3/2. All valves are normally closed.

The bodies are of block form construction for ease of mounting. Springs are stainless steel; internal seals being of nitrile rubber.
The 2/2 body allows air in one direction only, 3/2 versions having the facility of exhausting air through the actuator unit. This exhaust vent is unthreaded on all valves except the pilot and solenoid types which allows the piping away of exhaust air.

All mechanisms are spring returned.

Operating information

Working pressure	0 - 10 bar
Working temperature	-10°C to +80°C
Solenoid version	-10°C to +50°C
Minimum pilot pressure	1.9 bar @ 6 bar supply
Response time (solenoid energised)	14 msecs
Response time (solenoid de-energised)	75 msecs

Flow capacities in accordance with ISO6358

	B102-B103	B202-B203
Flow;	C = 7,54	C = 10,75 Nl/s x bar
	b = 0,29	b = 0,24
	Qn = 33 l/s	Qn = 43 l/s
	Qmax = 54 l/s	Qmax = 75 l/s
	Cv = 2,65	Cv = 3,20

Material specification

Body	Zinc die cast
Roller	Zinc plated steel
Mechanical arm	Zinc plated steel
Poppet	Stainless steel
Seals	Nitrile
Spring	Stainless steel
Bush	Aluminium
Piston	Aluminium

Working medium, air quality

Working medium: Dry, filtered compressed air to ISO 8573-1 class 3.4.3.

Recommended air quality for valves

For best possible service life and trouble free operation, ISO 8573-1 quality class 3.4.3 should be used. This means 5µm filter (standard filter) dew point +3°C for indoor operation (a lower dew point should be selected for outdoor operation) and oil concentration 1.0 mg oil/m³, which is what a standard compressor with a standard filter gives.

ISO 8573-1 quality classes

Quality class	Pollution particle size (µm)	Pollution max. concentration (mg/m³)	Water max. press. dew point (°C)	Oil max. concentration (mg/m³)
1	0,1	0,1	-70	0,01
2	1	1	-40	0,1
3	5	5	-20	1,0
4	15	8	+3	5,0
5	40	10	+7	25
6	-	-	+10	-

Tel: +45 63 12 83 00 | Email: ps@hymatik.com | www.hymatik.com | Hvidkaervej 27a, DK-5250 Odense SV, Denmark

Part number configurator for solenoid valves

D B 1 2 2 A 4 9

	Valve family
DB	HD poppet solenoid operated

	Thread port
1	3/8 BSP
2	1/2 BSP

	Air supply to solenoid
2	Internal

	Function
2	2/2 NC
3	3/2 NC

	Overrides
A	None
C	Flush - Locking
D	Extended - non locking

Voltage [1]	AC		DC
	60Hz	50Hz	
40	12		
42	24	22	
45			12
49			24
53	120	110	
57	240	230	
XX	valve less solenoid/coil		

[1] Shaded part numbers are standard
Unshaded part numbers are available on request but will be subject to minimum order quantities
Otherwise order XX version and order coil separately.

Part number configurator for manual & mechanical operated poppet valves

B 1 0 2 P

	Valve family
B	HD poppet manual & mechanical

	Thread port
1	3/8 BSP
2	1/2 BSP

	Function
2	2/2 NC
3	3/2 NC

	Operator
C	Ball
L	Lever
P	Pilot pressure
R	Roller lever

Flow characteristics

Flow capacities in accordance with ISO6358
Flow measured with valve on manifold
All pressures = effective pressure

B102

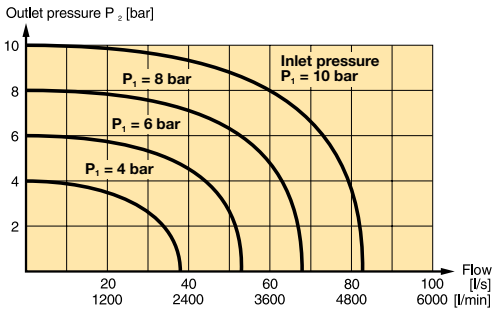

B202

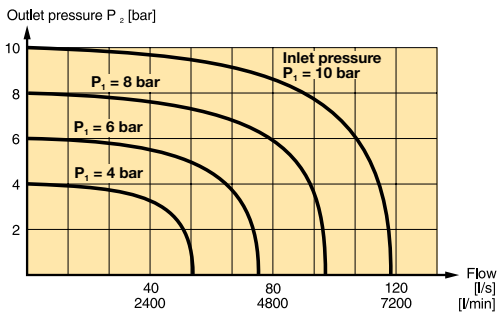

Electrical Information

Power consumption		Inrush	Hold
	AC	VA	8.5VA
	DC	4.8 Watt	
Rating		100% continuous	
Isolation class		F	
Protection class		IP 65 (P 54) DIN 40 050	
Connection		DIN 43 650 Form B	
Solenoid response		millisecs at 7 bar	

External pilot supply option

Solenoid pilot operated valves have an internal pilot air supply, but provisions for external pilot supply is provided. To use with external supply interchange 'O'-ring (Item 'A') and Plug (Item 'B') to block off the internal pilot supply. Remove hexagon socket plug (Item 'C') from the external pilot supply port, connecting an air supply as desired.

Orientation of the solenoid coil (Item 'D') can be altered through 90° increments by loosening the diffuser nut (Item 'E').

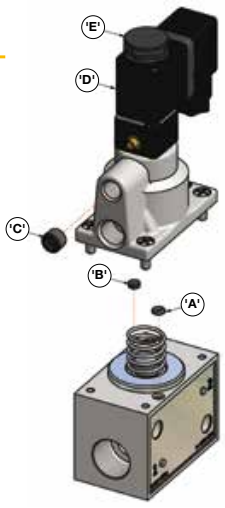

Parker Hannifin Corporation
Pneumatic Division - Europe

Tel: +45 63 12 83 00 | Email: ps@hymatik.com | www.hymatik.com | Hvidkaervej 27a, DK-5250 Odense SV, Denmark

Main data for mechanically operated valves, Heavy duty poppet series (NC only)

Symbol	Type	Connection	Actuator	Return	Operating force at 6 bar, N	Weight Kg	**Order code**
	2/2	G3/8	Solenoid pilot	Spring	24VDC Less solenoid	0.70 0.65	**DB122A49** **DB122AXX**
	3/2	G3/8	Solenoid pilot	Spring	24VDC Less solenoid	0.70 0.65	**DB123A49** **DB123AXX**
	2/2	G1/2	Solenoid pilot	Spring	24VDC Less solenoid	0.70 0.65	**DB222A49** **DB222AXX**
	3/2	G1/2	Solenoid pilot	Spring	24VDC Less solenoid	0.70 0.65	**DB223A49** **DB223AXX**
	2/2	G3/8	Air pilot	Spring		0.61	**B102P**
	3/2	G3/8	Air pilot	Spring		0.61	**B103P**
	2/2	G1/2	Air pilot	Spring		0.61	**B202P**
	3/2	G1/2	Air pilot	Spring		0.61	**B203P**

Order electrical connectors for solenoids separately.

Main data for mechanically operated valves, Heavy duty poppet series (NC only)

Symbol	Type	Connection	Actuator	Return	Operating force at 6 bar, N	Weight Kg	**Order code**
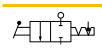	2/2	G3/8	Lever	Lever	22	0.65	**B102L**
	3/2	G3/8	Lock down	Lever lever	22	0.65	**B103L**
	2/2	G1/2	Lock down	Lever lever	22	0.65	**B202L**
	3/2	G1/2	Lock down	Lever lever	22	0.65	**B203L**
	2/2	G3/8	Roller lever	Spring	36	0.642	**B102R**
	3/2	G3/8	Roller lever	Spring	36	0.630	**B103R**
	2/2	G1/2	Roller lever	Spring	36	0.614	**B202R**
	3/2	G1/2	Roller lever	Spring	36	0.604	**B203R**
	2/2	G3/8	Ball	Spring	220	0.542	**B102C**
	3/2	G3/8	Ball	Spring	220	0.532	**B103C**
	2/2	G1/2	Ball	Spring	220	0.530	**B202C**
	3/2	G1/2	Ball	Spring	220	0.520	**B203C**

Tel: +45 63 12 83 00 | Email: ps@hymatik.com | www.hymatik.com | Hvidkaervej 27a, DK-5250 Odense SV, Denmark

Mechanically operated valves - 2/2, 3/2 valves

Basic body dimensions

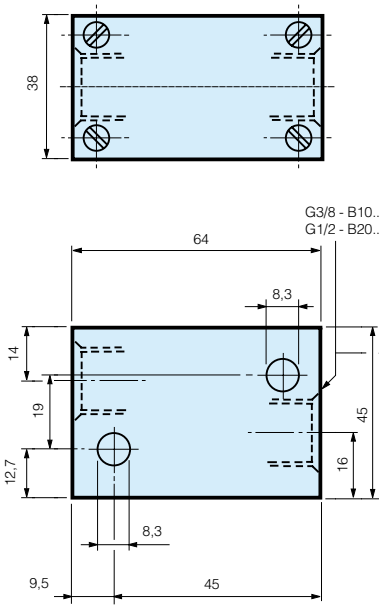

Solenoid pilot operated spring return
DB122, DB123, DB222, DB223

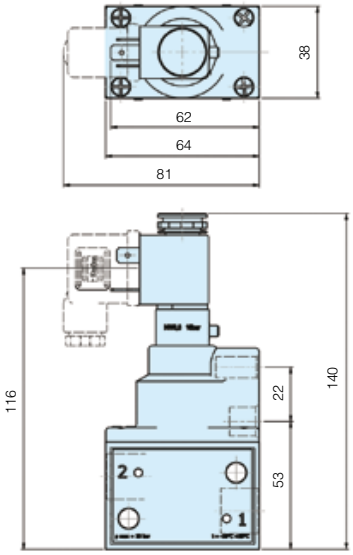

Air pilot operated spring return
B102P, B103P, B202P, B203P

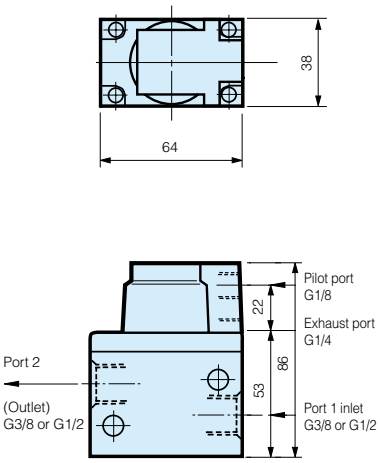

Lock down lever
B102L, B103L, B202L, B203L

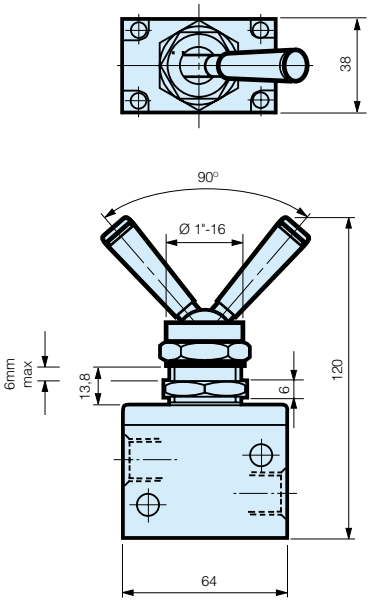

Roller lever operated spring return
B102R, B103R, B202R, B203R

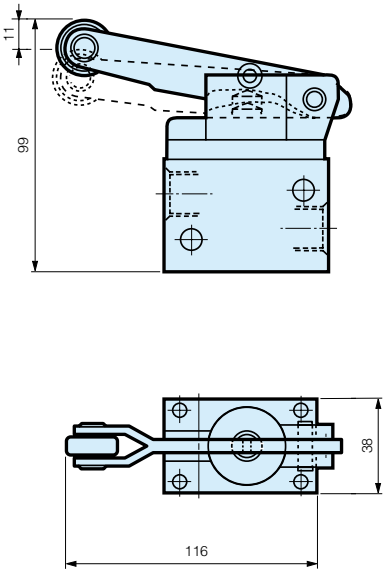

Ball operated spring return
B102C, B103C, B202C, B203C

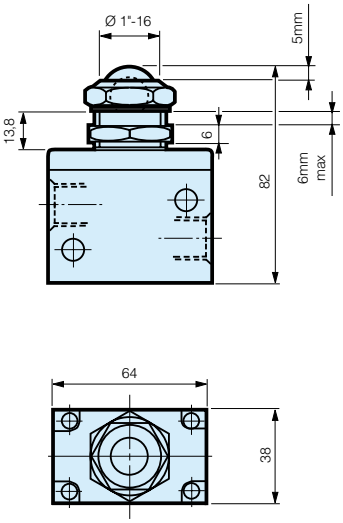

All dimensions in mm unless otherwise stated

Tel: +45 63 12 83 00 | Email: ps@hymatik.com | www.hymatik.com | Hvidkaervej 27a, DK-5250 Odense SV, Denmark

22mm solenoid operator part numbers and spares

Solenoid coils for 22mm solenoid operators

Voltage	**Order code** Form B	Weight (Kg)
12V 60Hz	**P2FCB440**	0.093
24V 50/60Hz	**P2FCB442**	0.093
12V DC	**P2FCB445**	0.093
12V DC Mobile	**P2FCB447**	0.093
24v DC Mobile	**P2FCB448**	0.093
24V DC	**P2FCB449**	0.093
48V DC	**P2FCB451**	0.093
110V/50Hz, 120V/60Hz	**P2FCB453**	0.093
230V/50Hz, 230V/60Hz	**P2FCB457**	0.093

Spare Solenoid Nuts

Valves with vented exhaust are fitted with diffuser plastic nut

Order Code
P2FND

Spare Solenoid Operators

Solenoid pilot operator 22mm NC, Normal duty (Max Operating pressure 10bar, Temp –10°C to +50°C)

Order code (with locking bi-stable m/o)	Weight Kg
P2FP13N4C	0.05
Order code (with Non-locking monostable m/o)	Weight Kg
P2FP13N4D	0.05
Order code (with no m/o)	Weight Kg
P2FP13N4A	0.05

Note.
The operators are supplied with mounting screws and interface 'O' rings.
Coils and connectors must be ordered separately.

Cable Plug Dimensions (mm)

Solenoid operators P2E-•V...

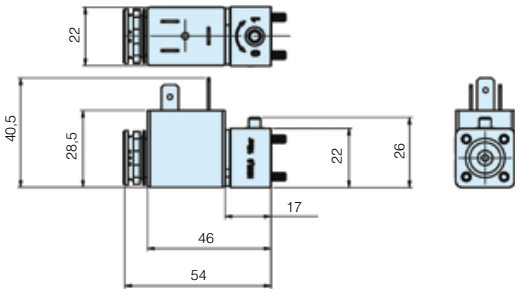

Cable plugs Form B

3EV10V10

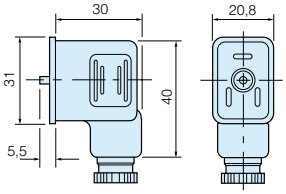

Solenoid Connectors / Cable Plugs EN175301-803

	Description	**Order code** 22mm Industrial Form B
With standard screw	Standard IP65 without flying lead	**3EV10V10**
	With LED and protection 24V AC/DC	**3EV10V20-24**
	With LED and protection 110V AC	**3EV10V20-110**
	With LED and protection 230V AC	**3EV10V20-230**
With cable	24V AC/DC, 5m cable LED and protection IP65	**3EV10V20-24L5**
	110V AC/DC, 5m cable LED and protection IP65	**3EV10V20-110L5**
	230V AC, 5m cable LED and protection IP65	**3EV10V20-230L5**

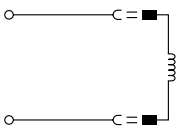

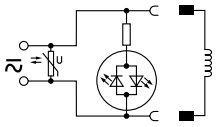

3EV10V10

3EV10V20-24	**3EV10V20-24L5**
3EV10V20-110	**3EV10V20-110L5**
3EV10V20-230	**3EV10V20-230L5**

Accessories

Sintered bronze series silencers





Port	**Order code**	**Pack Qty**
G1/4	**P6M-BAA2**	1

Male straight connectors - Parallel thread

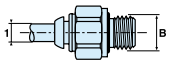

Tube Ø1	Thread B	Order code	Box Qty
4	1/8	**F4PMB4-1/8**	20
6	1/8	**F4PMB6-1/8**	30
6	1/4	**F4PMB6-1/4**	30
8	1/8	**F4PB8-1/8**	40
8	1/4	**F4PB8-1/4**	30
8	3/8	**F4PB8-3/8**	20
10	1/4	**F4PB10-1/4**	20
10	3/8	**F4PB10-3/8**	20
10	1/2	**F4PB10-1/2**	10
12	1/4	**F4PB12-1/4**	10
12	3/8	**F4PB12-3/8**	10
12	1/2	**F4PB12-1/2**	10
14	3/8	**F4PB14-3/8**	10
14	1/2	**F4PB14-1/2**	10

Tel: +45 63 12 83 00 | Email: ps@hymatik.com | www.hymatik.com | Hvidkaervej 27a, DK-5250 Odense SV, Denmark









DX Global ISO Valves

A complete range of pneumatic ISO valves



Rust and corrosion resistant body

With the valve body in polyamide reinforced fiberglass and the casting in anodised aluminium, the Isomax range presents a comprehensive modern design to suit most industrial environments.

- **ISO 15407-1 Sizes 02 & 01 and ISO 5599-1 Sizes 1, 2 & 3**
- **Ceramic technology for long life operation**
- **From vacuum up to 12 bar applications**
- **Internal or external pilot supply with same valves**
- **M12 on each coil**
- **Common M12**

Tel: +45 63 12 83 00 | Email: ps@hymatik.com | www.hymatik.com | Hvidkaervej 27a, DK-5250 Odense SV, Denmark

Ceramic slide valves for maximum operational life. Solenoid or air pilot actuation. Vacuum to 10 bar general applications.

- Size 01 and 02 (26 and 18 mm)
- Ceramic technology for long life operation
- From vacuum up to 10 bar applications
- Internal or external pilot supply with same valves
- Capture solenoid exhaust



Operation information

Working pressure :		-0,9 to 10 bar
Working temperature :		-10 to +60°C
	DX02	**DX01**
Flow (Qmax.) :	630 l/min	1000 l/min
Flow (Qn) :	385 l/min	585 l/min

Ceramic technology

All ISOMAX products use high-tech ceramic switching technology :

- **Excellent reliability :**

  Long life in excess of 100 million operations*.

  Operates with lubricated or non lubricated air.

  Low sensitivity to air quality changes switching without seal.

  Stiction free.

- **High performances :**

  Slide valve concept allows high flow / size ratio and short response time due to short slide stroke and low friction.



- **Switchable selector**

  Valves fitted with switchable selector to give internal or external pilot supply

Ceramic plate

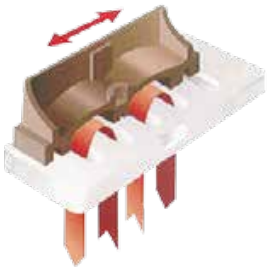

- **Size 02 & Size 01**

  Solenoid exhaust pilot

- **Stable long lasting performances**

  Low friction switching : minimum wear of the valve member/seal assembly.

Tel: +45 63 12 83 00 | Email: ps@hymatik.com | www.hymatik.com | Hvidkaervej 27a, DK-5250 Odense SV, Denmark

Isomax - ISO 15407-1 - Sizes 02 & 01
Pneumatic remote pilot operated
Without valve spool manual override



Symbol	Description	Size	Weight (g)	Order code
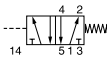	5/2 Air pilot - Spring return	02 - 18 mm	90	**DX02-421-60**
		01 - 26mm	130	**DX01-421-60**
	5/2 Air pilot - Differential	02 - 18 mm	90	**DX02-451-60**
		01 - 26mm	130	**DX01-451-60**
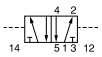	5/2 Double air pilot	02 - 18 mm	90	**DX02-406-60**
		01 - 26mm	130	**DX01-406-60**
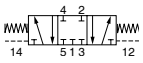	5/3 Closed Centre (APB)	02 - 18 mm	90	**DX02-416-60**
		01 - 26mm	130	**DX01-416-60**
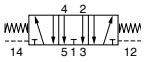	5/3 Vented Center	02 - 18 mm	90	**DX02-411-60**
		01 - 26mm	130	**DX01-411-60**

Isomax - ISO 15407-1 - Sizes 02 & 01
15 mm DIN C / 24 Vdc / 1,2 W solenoid valve operator



Symbol	Description	Size	Weight (g)	Order code
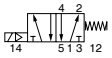	5/2 Single solenoid - Spring return	02 - 18 mm	130	**DX02-621-951M**
		01 - 26mm	170	**DX01-621-951M**
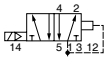	5/2 Single solenoid - Differential	02 - 18 mm	130	**DX02-651-951M**
		01 - 26mm	170	**DX01-651-951M**
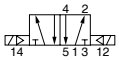	5/2 Double solenoid	02 - 18 mm	130	**DX02-606-951M**
		01 - 26mm	170	**DX01-606-951M**
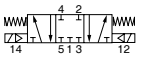	5/3 Closed Centre (APB)	02 - 18 mm	130	**DX02-616-951M**
		01 - 26mm	170	**DX01-616-951M**
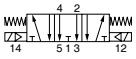	5/3 Vented Center	02 - 18 mm	160	**DX02-611-951M**
		01 - 26mm	170	**DX01-611-951M**

Solenoid connectors & cable plugs to be ordered separately. See solenoid section

Isomax - ISO 15407-1 - Sizes 02 & 01
Without 15 mm DIN C solenoid valve operator



Symbol	Description	Size	Weight (g)	Order code
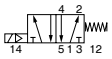	5/2 Single solenoid - Spring return	02 - 18 mm	130	**DX02-621-60**
		01 - 26mm	170	**DX01-621-60**
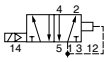	5/2 Single solenoid - Differential	02 - 18 mm	130	**DX02-651-60**
		01 - 26mm	170	**DX01-651-60**
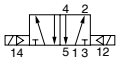	5/2 Double solenoid	02 - 18 mm	130	**DX02-606-60**
		01 - 26mm	170	**DX01-606-60**
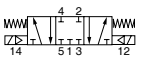	5/3 Closed Centre (APB)	02 - 18 mm	130	**DX02-616-60**
		01 - 26mm	170	**DX01-616-60**
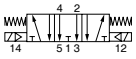	5/3 Vented Center	02 - 18 mm	160	**DX02-611-60**
		01 - 26mm	170	**DX01-611-60**

15mm solenoid valve operator, solenoid connectors & cable plug to be ordered separately. See solenoid section

Tel: +45 63 12 83 00 | Email: ps@hymatik.com | www.hymatik.com | Hvidkaervej 27a, DK-5250 Odense SV, Denmark

Ceramic slide valves for maximum operational life. Solenoid or air pilot operated with a wide choice of bases and manifolds. Vacuum to 12 bar general applications.

- Size1, 2 and 3
- Ceramic technology for long life operation
- From vacuum up to 12 bar applications
- Internal or external pilot supply with same valves
- M12 on each coil
- Common M12

For ATEX specific products contact Sales Office



Operation information

Working pressure :	-0,9 to 12 bar		
Working temperature :	-10 to +60°C		
	DX1	**DX2**	**DX3**
Flow (Qmax.) :	1680 l/min	3640 l/min	6420 l/min
Flow (Qn.) :	1150 l/min	2330 l/min	4050 l/min
ATEX approval:	CE Ex II 2 GD c 85°C		

Isomax - ISO 5599-1 - Sizes 1, 2 & 3
Pneumatic remote pilot operated
With direct valve spool manual override



Symbol	Description	Size	Weight (g)	Order code
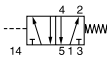	5/2 Air pilot - Spring return	1 - 43 mm	350	**DX1-421-70**
		2 - 56 mm	600	**DX2-421-70**
		3 - 71 mm	1100	**DX3-421-70**
	5/2 Air pilot - Differential	1 - 43 mm	350	**DX1-451-70**
		2 - 56 mm	600	**DX2-451-70**
		3 - 71 mm	1100	**DX3-451-70**
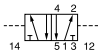	5/2 Double air pilot	1 - 43 mm	350	**DX1-406-70**
		2 - 56 mm	600	**DX2-406-70**
		3 - 71 mm	1100	**DX3-406-70**
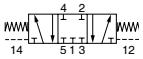	5/3 Closed Center (APB)	1 - 43 mm	350	**DX1-416-70**
		2 - 56 mm	600	**DX2-416-70**
		3 - 71 mm	1100	**DX3-416-70**
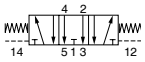	5/3 Vented Center	1 - 43 mm	350	**DX1-411-70**
		2 - 56 mm	600	**DX2-411-70**
		3 - 71 mm	1100	**DX3-411-70**
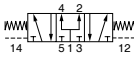	5/3 Pressurised Center	1 - 43 mm	350	**DX1-413-70**
		2 - 56 mm	600	**DX2-413-70**

Isomax - ISO 5599-1 - Sizes 1, 2 & 3
Pneumatic remote pilot operated
Without direct valve spool manual override



Symbol	Description	Size	Weight (g)	Order code
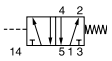	5/2 Air pilot - Spring return	1 - 43 mm	350	**DX1-421-60**
		2 - 56 mm	600	**DX2-421-60**
		3 - 71 mm	1100	**DX3-421-60**
	5/2 Air pilot - Differential	1 - 43 mm	350	**DX1-451-60**
		2 - 56 mm	600	**DX2-451-60**
		3 - 71 mm	1100	**DX3-451-60**
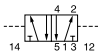	5/2 Double air pilot	1 - 43 mm	350	**DX1-406-60**
		2 - 56 mm	600	**DX2-406-60**
		3 - 71 mm	1100	**DX3-406-60**
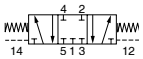	5/3 Closed Center (APB)	1 - 43 mm	350	**DX1-416-60**
		2 - 56 mm	600	**DX2-416-60**
		3 - 71 mm	1100	**DX3-416-60**
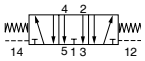	5/3 Vented Center	1 - 43 mm	350	**DX1-411-60**
		2 - 56 mm	600	**DX2-411-60**
		3 - 71 mm	1100	**DX3-411-60**
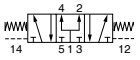	5/3 Pressurised Center	1 - 43 mm	350	**DX1-413-60**
		2 - 56 mm	600	**DX2-413-60**

Tel: +45 63 12 83 00 | Email: ps@hymatik.com | www.hymatik.com | Hvidkaervej 27a, DK-5250 Odense SV, Denmark

Isomax - ISO 5599-1 - Sizes 1, 2 & 3
CNOMO operator with 30 x 30 DIN Form A / 24 Vdc / 2,7 W solenoid

With non locking manual override on solenoid valve operator - Without direct valve spool manual override



Symbol	Description	Size	Weight (g)	Order code
	5/2 Single solenoid - Spring return	1 - 43 mm	500	**DX1-621-BL49**
		2 - 56 mm	750	**DX2-621-BL49**
		3 - 71 mm	1250	**DX3-621-BL49**
	5/2 Single solenoid - Differential	1 - 43 mm	500	**DX1-651-BL49**
		2 - 56 mm	750	**DX2-651-BL49**
		3 - 71 mm	1250	**DX3-651-BL49**
	5/2 Double solenoid	1 - 43 mm	650	**DX1-606-BL49**
		2 - 56 mm	900	**DX2-606-BL49**
		3 - 71 mm	1400	**DX3-606-BL49**
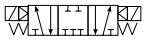	5/3 Closed Center (APB)	1 - 43 mm	560	**DX1-616-BL49**
		2 - 56 mm	900	**DX2-616-BL49**
		3 - 71 mm	1400	**DX3-616-BL49**
	5/3 Vented Center	1 - 43 mm	650	**DX1-611-BL49**
		2 - 56 mm	900	**DX2-611-BL49**
		3 - 71 mm	1400	**DX3-611-BL49**
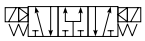	5/3 Pressurised Center	1 - 43 mm	650	**DX1-613-BL49**
		2 - 56 mm	900	**DX2-613-BL49**

Solenoid connectors & cable plug to be ordered separately. See solenoid section

Isomax - ISO 5599-1 - Sizes 1, 2 & 3
CNOMO operator without coil

With non locking manual override on solenoid valve operator - Without direct valve spool manual override



Symbol	Description	Size	Weight (g)	Order code
	5/2 Single solenoid - Spring return	1 - 43 mm	400	**DX1-621-BN**
		2 - 56 mm	650	**DX2-621-BN**
		3 - 71 mm	1150	**DX3-621-BN**
	5/2 Single solenoid - Differential	1 - 43 mm	400	**DX1-651-BN**
		2 - 56 mm	650	**DX2-651-BN**
		3 - 71 mm	1150	**DX3-651-BN**
	5/2 Double solenoid	1 - 43 mm	550	**DX1-606-BN**
		2 - 56 mm	800	**DX2-606-BN**
		3 - 71 mm	1300	**DX3-606-BN**
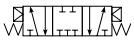	5/3 Closed Center (APB)	1 - 43 mm	550	**DX1-616-BN**
		2 - 56 mm	800	**DX2-616-BN**
		3 - 71 mm	1300	**DX3-616-BN**
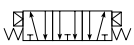	5/3 Vented Center	1 - 43 mm	550	**DX1-611-BN**
		2 - 56 mm	800	**DX2-611-BN**
		3 - 71 mm	1300	**DX3-611-BN**
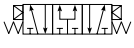	5/3 Pressurised Center	1 - 43 mm	550	**DX1-613-BN**
		2 - 56 mm	800	**DX2-613-BN**

30 x 30 DIN Form A or 22 x 30 DIN Form B coil & coil connectors to be ordered separately. See solenoid section

Parker Hannifin Corporation
Pneumatic Division - Europe

Tel: +45 63 12 83 00 | Email: ps@hymatik.com | www.hymatik.com | Hvidkaervej 27a, DK-5250 Odense SV, Denmark

Isomax - ISO 5599-1 - Sizes 1, 2 & 3
Valve alone without operator
With direct valve spool manual override

	Symbol	Description	Size	Weight (g)	Order code
		5/2 Air pilot - Spring return	1 - 43 mm	350	**DX1-621-70**
			2 - 56 mm	600	**DX2-621-70**
			3 - 71 mm	1100	**DX3-621-70**
		5/2 Air pilot - Differential	1 - 43 mm	350	**DX1-651-70**
			2 - 56 mm	600	**DX2-651-70**
			3 - 71 mm	1100	**DX3-651-70**
		5/2 Double air pilot	1 - 43 mm	350	**DX1-606-70**
			2 - 56 mm	600	**DX2-606-70**
			3 - 71 mm	1100	**DX3-606-70**
	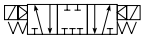	5/3 Closed Center (APB)	1 - 43 mm	350	**DX1-616-70**
			2 - 56 mm	600	**DX2-616-70**
			3 - 71 mm	1100	**DX3-616-70**
	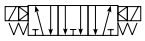	5/3 Vented Center	1 - 43 mm	350	**DX1-611-70**
			2 - 56 mm	600	**DX2-611-70**
			3 - 71 mm	1100	**DX3-611-70**
	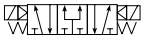	5/3 Pressurised Center	1 - 43 mm	350	**DX1-613-70**
			2 - 56 mm	600	**DX2-613-70**

Isomax - ISO 5599-1 - Sizes 1, 2 & 3
Valve alone without operator
Without direct valve spool manual override

	Symbol	Description	Size	Weight (g)	Order code
		5/2 Air pilot - Spring return	1 - 43 mm	350	**DX1-621-60**
			2 - 56 mm	600	**DX2-621-60**
			3 - 71 mm	1100	**DX3-621-60**
		5/2 Air pilot - Differential	1 - 43 mm	350	**DX1-621-60**
			2 - 56 mm	600	**DX2-621-60**
			3 - 71 mm	1100	**DX3-621-60**
		5/2 Double air pilot	1 - 43 mm	350	**DX1-606-60**
			2 - 56 mm	600	**DX2-606-60**
			3 - 71 mm	1100	**DX3-606-60**
	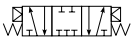	5/3 Closed Center (APB)	1 - 43 mm	350	**DX1-616-60**
			2 - 56 mm	600	**DX2-616-60**
			3 - 71 mm	1100	**DX3-616-60**
	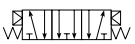	5/3 Vented Center	1 - 43 mm	350	**DX1-611-60**
			2 - 56 mm	600	**DX2-611-60**
			3 - 71 mm	1100	**DX3-611-60**
	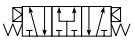	5/3 Pressurised Center	1 - 43 mm	350	**DX1-613-60**
			2 - 56 mm	600	**DX2-613-60**

Tel: +45 63 12 83 00 | Email: ps@hymatik.com | www.hymatik.com | Hvidkaervej 27a, DK-5250 Odense SV, Denmark

15 mm DIN Form C (8mm spacing) pilot solenoid valve - Standard version

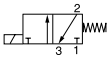

Pins/Air Opposite (Pins UP)



		Manual Overrides		Flush (Not Extended)		Extended	
			Without Manual Override	Blue Override, non locking	Yellow Override, Locking	Blue Override, non locking	Yellow Override, Locking
	Voltage	W (g)	**Order code**	**Order code**	**Order code**	**Order code**	**Order code**
	12 Vdc	38	**P2E-KV32B0**	**P2E-KV32B1**	**P2E-KV32B2**	**P2E-KV32B3**	**P2E-KV32B4**
	24 Vdc	38	**P2E-KV32C0**	**P2E-KV32C1**	**P2E-KV32C2**	**P2E-KV32C3**	**P2E-KV32C4**
	48 Vdc	38	**P2E-KV32D0**	**P2E-KV32D1**	**P2E-KV32D2**	**P2E-KV32D3**	**P2E-KV32D4**
	24 Vac 50Hz	38	**P2E-KV31C0**	**P2E-KV31C1**	**P2E-KV31C2**	**P2E-KV31C3**	**P2E-KV31C4**
	48 Vac 50/60Hz	38	**P2E-KV34D0**	**P2E-KV34D1**	**P2E-KV34D2**	**P2E-KV34D3**	**P2E-KV34D4**
	115 Vac 50Hz 120 Vac 60 Hz	38	**P2E-KV31F0**	**P2E-KV31F1**	**P2E-KV31F2**	**P2E-KV31F3**	**P2E-KV31F4**
	230 Vac 50Hz 240 Vac 60 Hz	38	**P2E-KV31J0**	**P2E-KV31J1**	**P2E-KV31J2**	**P2E-KV31J3**	**P2E-KV31J4**

Mounting screws included with the DX valve body

15mm DIN Form C (8mm spacing) pilot solenoid valve - Mobile version

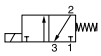



	Voltage	W (g)	Without Manual Override **Order code**	Not Extended Blue Override non locking flush **Order code**
	12 Vdc	38	**P2E-MV35B0**	**P2E-MV35B1**
	24 Vdc	38	**P2E-MV35C0**	**P2E-MV35C1**
	37,5 Vdc	38	**P2E-MV35W0**	**P2E-MV35W1**
	48 Vdc	38	**P2E-MV35D0**	**P2E-MV35D1**
	72 Vdc	38	**P2E-MV35T0**	**P2E-MV35T1**
	78 Vdc	38	**P2E-MV35Y0**	**P2E-MV35Y1**
	96 Vdc	38	**P2E-MV35V0**	**P2E-MV35V1**
	110 Vdc	38	**P2E-MV35E0**	**P2E-MV35E1**

Mounting screws included with the DX valve body

15mm DIN Form C (8mm spacing) pilot solenoid valve - Food Industry version

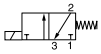



			Not Extended		Extended	
		Without Manual Override	Blue Override non locking flush	Yellow Override Locking flush	Blue Overide non locking flush	Yellow Override Locking flush
Voltage	W (g)	**Order code**	**Order code**	**Order code**	**Order code**	**Order code**
24 Vdc	38	**P2E-QV32C0**	**P2E-QV32C1**	**P2E-QV32C2**	**P2E-QV32C3**	**P2E-QV32C4**
48 Vdc	38	**P2E-QV32D0**	**P2E-QV32D1**	**P2E-QV32D2**		
24 Vac 50 Hz	38	**P2E-QV31C0**	**P2E-QV31C1**	**P2E-QV31C2**	**P2E-QV31C3**	**P2E-QV31C4**
48 Vac 50/60Hz	38	**P2E-QV34D0**	**P2E-QV34D1**	**P2E-QV34D2**		
115 Vac 50Hz/ 120 Vac 60Hz	38	**P2E-QV31F0**	**P2E-QV31F1**	**P2E-QV31F2**	**P2E-QV31F3**	**P2E-QV31F4**
230 Vac 50Hz 240 Vac 60Hz/	38	**P2E-QV31J0**	**P2E-QV31J1**	**P2E-QV31J2**	**P2E-QV31J3**	**P2E-QV31J4**

Mounting screws included with the DX valve body

Solenoid Connectors 15 mm DIN Form C / ISO15217





Connector schematic

No LED version

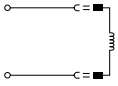

LED version

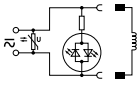

Description	Characteristic	Visualisation	Cable length	W (g)	Order code
With large headed screw suitable for mounting in inaccessible or recess position	Standard IP65	No LED	No cable	20	**P8C-C**
		24 Vdc LED	No cable	20	**P8C-C26C**
		110 Vac LED	No cable	20	**P8C-C21E**
With standard screw	Standard IP65	No LED	No cable	15	**P8C-D**
			2 meters	115	**P8L-C2**
			5 meters	240	**P8L-C5**
		24 Vdc/Vac LED	No cable	15	**P8C-D26C**
			2 meters	170	**P8L-C226C**
			5 meters	240	**P8L-C526C**
			10 meters	440	**P8L-CA26C**
		110 Vac LED	No cable	115	**P8C-D21E**
			2 meters	115	**P8L-C221E**
			5 meters	230	**P8L-C521E**

In accordance with the EU Machine Directive, EN 983, solenoid valves with manual override should have spring-return operating arms for safety.

Tel: +45 63 12 83 00 | Email: ps@hymatik.com | www.hymatik.com | Hvidkaervej 27a, DK-5250 Odense SV, Denmark

3/2 N.C. CNOMO Operator - Without Coil

	Description	Manual override	W (g)	Order code
	Solenoid operator for 30 x 30 DIN Form A Coil	No manual override	65	**P2FP23N4A**
	Dedicated to Low Power 2,5W / 3VA Coil	Pulse non locking	65	**P2FP23N4B**
		Locking	65	**P2FP23N4C**
	Solenoid operator for 30 x 30 DIN Form A Coil	No manual override	65	**EV3000100**
	Dedicated to High Power 4,5W / 5VA Coil	Pulse non locking	65	**EV3001100**
		Locking	65	**EV3003100**
	Solenoid operator for 22 x 30 DIN Form B Coil	No manual override	65	**1EV0*310**
	Dedicated to Low Power 2,5W / 4,5VA Coil	Pulse non locking	65	**1EV1*310**
		Locking	65	**1EV3*310**

30 x 30 DIN Form A and 22 x 30 DIN Form B Coils for CNOMO Operator

		30 x 30 DIN Form A			22 x 30 DIN Form B	
			Low Power (to be used with P2FP23N4x)	High Power (to be used with EV300x100)		Low Power (to be used with 1EVx*310)
	Voltage	W (g)	**Order code**	**Order code**	W (g)	**Order code**
	12 Vdc	105	**P2FCA445**	**P2FCA545**	93	**P2FCB345**
	24 Vdc	105	**P2FCA449**	**P2FCA549**	93	**P2FCB349**
	48 Vdc	105	**P2FCA451**	**P2FCA551**	93	**P2FCB351**
	12 Vac 50/60 Hz	105	**P2FCA440**	**P2FCA540**	93	**P2FCB340**
	24 Vac 50/60 Hz	105	**P2FCA445**	**P2FCA545**	93	**P2FCB345**
	48 Vac 50/60 Hz	105	**P2FCA449**	**P2FCA549**	93	**P2FCB349**
	110 Vac 50 Hz / 120 Vac 60 Hz	105	**P2FCA453**	**P2FCA553**	93	**P2FCB353**
	230 Vac 50 Hz / 240 Vac 60 Hz	105	**P2FCA457**	**P2FCA557**	93	**P2FCB357**

Spare Solenoid Nuts

	Description	Usage	W (g)	Order code
	Plastic knurled nut	For valve requiring Captured exhaust	5	**P2FNPA**
	Diffuser plastic nut	For valve requiring Vented exhaust	5	**P2FNDA**

30 x 30 DIN Form A and 22 x 30 DIN Form B Solenoid Connectors

	Description	Characteristic	Visualisation	Cable length	W (g)	Order code
	30 x 30 DIN Form A connector	Standard IP65	No LED	No cable	15	**3EV290V10**
	With standard screw		24 Vdc/Vac LED	No cable	30	**3EV290V20-24**
				5 meters	355	**3EV290V20-24L5**
			110 Vac LED	No cable	30	**3EV290V20-110**
				5 meters	470	**3EV290V20-110L5**
			230 Vac LED	No cable	30	**3EV290V20-230**
				5 meters	350	**3EV290V20-230L5**
	22 x 30 DIN Form B connector	Standard IP65	No LED	No cable	15	**3EV10V10**
	With standard screw		24 Vdc/Vac LED	No cable	20	**3EV10V20-24**
				5 meters	350	**3EV10V20-24L5**
			110 Vac LED	No cable	25	**3EV10V20-110**
				5 meters	355	**3EV10V20-110L5**
			230 Vac LED	No cable	25	**3EV10V20-230**
				5 meters	360	**3EV10V20-230L5**

Connector schematic

No LED version

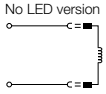

LED version

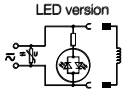

M12 Adaptor for 30 x 30 DIN Form A Coil

	Description	Characteristics	Visualisation	Cable	W (g)	Order code
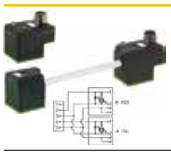	M12 Connector for one coil	24 V AC/DC - 4A	LED	No cable	30	**P8C-A626C**
	M12 Connector for two coils	24 V AC/DC - 4A	LED	No cable	70	**P8C-AM26C**

Note: Solenoid pilot operators are fitted to the ISO valve range.
Order the above part numbers for spares.
The operators are supplied with mounting screws and interface 'O' rings.
Coils and connectors must be ordered separately.

Parker Hannifin Corporation
Pneumatic Division - Europe

Tel: +45 63 12 83 00 | Email: ps@hymatik.com | www.hymatik.com | Hvidkaervej 27a, DK-5250 Odense SV, Denmark









H Series ISO Valves

A complete range of pneumatic ISO valves



Flexibility, fast response, and high performance

Parker's H Series ISO valve line offers a complete ISO valve package, from ISO 15407 18mm and 26mm valves, to the larger ISO 5599 size 1, 2, and 3 valves, all available in either plug-in -2 or individual connector -1 options.

- **ISO 15407-1 & 15407-2 Sizes 02 & 01 and ISO 5599-1 & 5599-2 Sizes 1, 2 & 3**
- **From vacuum up to 10 bar applications**
- **Internal or external pilot supply with same valves**

H Series ISO Valves - Heavy Duty Applications



Market Applications

- Automotive
- Machine tools
- Mobile

- **Excellent reliability :**
  Long life in excess of 30 million operations.

- **Heavy Duty Metal Body**

- **Stable long lasting performances :**
  due to wear compensation

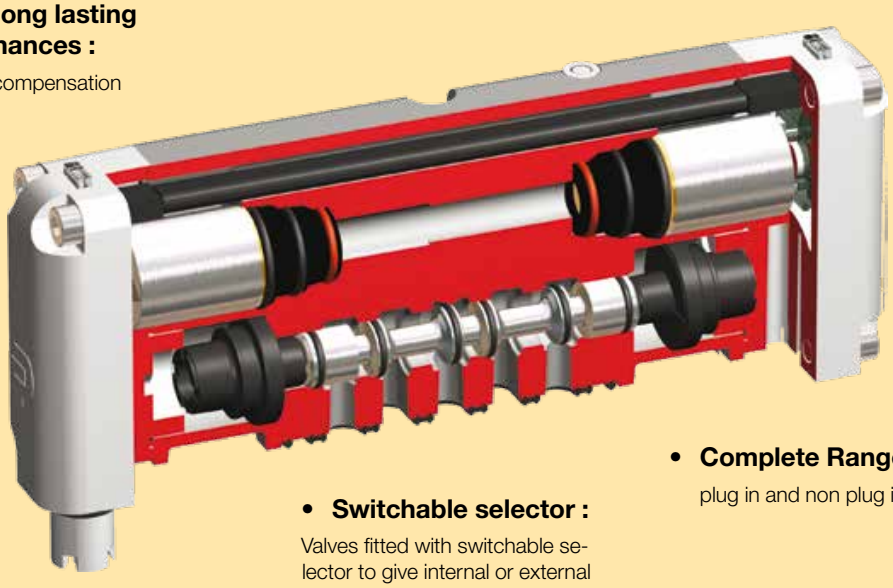

- **Complete Range :**
  plug in and non plug in

- **Switchable selector :**
  Valves fitted with switchable selector to give internal or external pilot supply

- **WCS Spool Technology**

WCS
Wear Compensating System

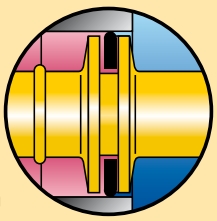

Solenoid or air pilot actuation. Vacuum to 10 bar heavy duty applications.

- Size HA and HB (26mm and 18mm)
- Heavy duty and corrosion resistant body
- Internal led & rectifier
- Internal or external pilot supply with same valve
- M12 common wiring



Operation information

Working pressure :	2,0 to 10 bar	
Working temperature :	-15 to +50°C	
	Size 02	**Size 01**
Flow (Qmax.) :	10,8 l/s	25,3 l/s
Flow (Qn) :	6,5 l/s	15,3 l/s

H Series ISO 15407-1 - Sizes 02 & 01
Pneumatic remote pilot operated

	Symbol	Description	Size	Weight (g)	Order code
 HB 18 mm	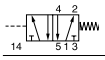	5/2 Air pilot - Spring return	02 - 18 mm	150	**HBFWX000XXA**
			01 - 26 mm	250	**HAFWX000XXA**
		5/2 Air pilot - Differential	02 - 18 mm	150	**HB3WX000XXA**
			01 - 26 mm	250	**HA3WX000XXA**
		5/2 Double air pilot	02 - 18 mm	165	**HB4WX000XXA**
			01 - 26 mm	265	**HA4WX000XXA**
	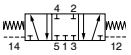	5/3 Closed Center (APB)	02 - 18 mm	165	**HB8WX000XXA**
			01 - 26 mm	265	**HA8WX000XXA**
 HA 26 mm	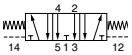	5/3 Vented Center	02 - 18 mm	165	**HB9WX000XXA**
			01 - 26 mm	265	**HA9WX000XXA**
	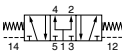	5/3 Pressurised Center	02 - 18 mm	165	**HB0WX000XXA**
			01 - 26 mm	265	**HA0WX000XXA**

H Series ISO 15407-1 - Sizes 02 & 01
With 24 Vdc / 1 W built-in coil - Integrated M12 connector
Oriented side 14, LED & Surge suppressor

	Symbol	Description	Size	Weight (g)	Order code
 HB 18 mm	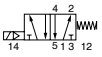	5/2 Air pilot - Spring return	02 - 18 mm	150	**HBEWXBG2G9000FA**
			01 - 26 mm	250	**HAEWXBG2G9000FA**
		5/2 Air pilot - Differential	02 - 18 mm	150	**HB1WXBG2G9000FA**
			01 - 26 mm	250	**HA1WXBG2G9000FA**
	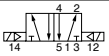	5/2 Double air pilot	02 - 18 mm	165	**HB2WXBG2G9000FA**
			01 - 26 mm	265	**HA2WXBG2G9000FA**
	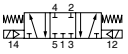	5/3 Closed Center (APB)	02 - 18 mm	165	**HB5WXBG2G9000FA**
			01 - 26 mm	265	**HA5WXBG2G9000FA**
 HA 26 mm	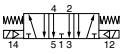	5/3 Vented Center	02 - 18 mm	165	**HB6WXBG2G9000FA**
			01 - 26 mm	265	**HA6WXBG2G9000FA**
	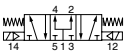	5/3 Pressurised Center	02 - 18 mm	165	**HB7WXBG2G9000FA**
			01 - 26 mm	265	**HA7WXBG2G9000FA**

ISO 20401
4-Pin Male / Single Solenoid

4-PIN Micro
(Top Cover)

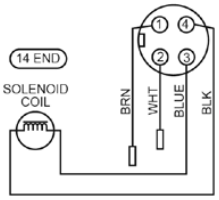

ISO 20401
4-Pin Male / Double Solenoid

4-PIN Micro
(Top Cover)

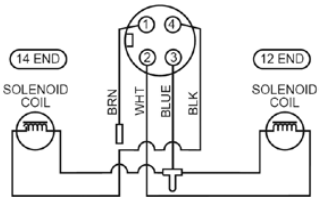

Tel: +45 63 12 83 00 | Email: ps@hymatik.com | www.hymatik.com | Hvidkaervej 27a, DK-5250 Odense SV, Denmark

Heavy duty valve. Solenoid or air pilot. Vacuum to 10 bar. Wide choice of electrical connections.

- Size 1, 2, 3
- Heavy duty and corrosion resistant body
- Vacuum to 10 bar
- Internal or external pilot supply with same valve
- Din A, M12, M23 connections



Operation information

Working pressure :	2,0 to 10 bar		
Working temperature :	-15 to +50°C		
	Size 1	**Size 2**	**Size 3**
Flow (Qmax.) :	34,5 l/s	69,0 l/s	130,8 l/s
Flow (Qn) :	20,8 l/s	42,0 l/s	83,7 l/s

H Series ISO 5599-1 - Sizes 1, 2 & 3
Pneumatic Remote Pilot operated valve



Symbol	Description	Size	Weight (g)	Order code
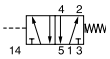	5/2 Single solenoid - Spring return	1 - 43 mm	600	**H1FWX000XXD**
		2 - 56 mm	1020	**H2FWX000XXD**
		3 - 71 mm	1300	**H3FWX000XXD**
	5/2 Single solenoid - Differential	1 - 43 mm	600	**H13WX000XXD**
		2 - 56 mm	1020	**H23WX000XXD**
		3 - 71 mm	1300	**H33WX000XXD**
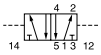	5/2 Double solenoid	1 - 43 mm	600	**H14WX000XXD**
		2 - 56 mm	1020	**H24WX000XXD**
		3 - 71 mm	1300	**H34WX000XXD**
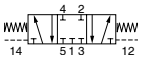	5/3 Closed Center (APB)	1 - 43 mm	600	**H18WX000XXD**
		2 - 56 mm	1020	**H28WX000XXD**
		3 - 71 mm	1300	**H38WX000XXD**
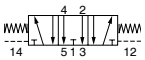	5/3 Vented Center	1 - 43 mm	600	**H19WX000XXD**
		2 - 56 mm	1020	**H29WX000XXD**
		3 - 71 mm	1300	**H39WX000XXD**
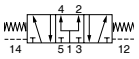	5/3 Pressurised Center	1 - 43 mm	600	**H10WX000XXD**
		2 - 56 mm	1020	**H20WX000XXD**
		3 - 71 mm	1300	**H30WX000XXD**

H Series ISO 5599-1 - Sizes 1, 2 & 3
CNOMO operator with Central M12 connector / 24 Vdc / 2,7 W solenoid



Symbol	Description	Size	Weight (g)	Order code
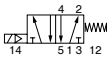	5/2 Single solenoid - Spring return	1 - 43 mm	770	**H1EWXBG2B9000FD**
		2 - 56 mm	1290	**H2EWXBG2B9000FD**
		3 - 71 mm	1570	**H3EWXBG2B9000FD**
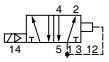	5/2 Single solenoid - Differential	1 - 43 mm	770	**H11WXBG2B9000FD**
		2 - 56 mm	1290	**H21WXBG2B9000FD**
		3 - 71 mm	1570	**H31WXBG2B9000FD**
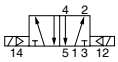	5/2 Double solenoid	1 - 43 mm	1040	**H12WXBG2B9000FD**
		2 - 56 mm	1460	**H22WXBG2B9000FD**
		3 - 71 mm	1740	**H32WXBG2B9000FD**
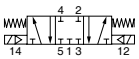	5/3 Closed Center (APB)	1 - 43 mm	1040	**H15WXBG2B9000FD**
		2 - 56 mm	1460	**H25WXBG2B9000FD**
		3 - 71 mm	1740	**H35WXBG2B9000FD**
	5/3 Vented Center	1 - 43 mm	1040	**H16WXBG2B9000FD**
		2 - 56 mm	1460	**H26WXBG2B9000FD**
		3 - 71 mm	1740	**H36WXBG2B9000FD**
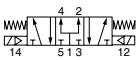	5/3 Pressurised Center	1 - 43 mm	1040	**H17WXBG2B9000FD**
		2 - 56 mm	1460	**H27WXBG2B9000FD**
		3 - 71 mm	1740	**H37WXBG2B9000FD**

ISO 20401
4-Pin Male / Single Solenoid

4-PIN Micro
(Top Cover)

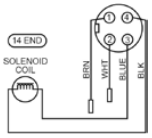

ISO 20401
4-Pin Male / Double Solenoid

4-PIN Micro
(Top Cover)

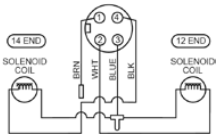

H Series ISO 5599-1 - Sizes 1, 2 & 3
CNOMO operator with 30 x 30 DIN Form A / 24 Vdc / 2,7 W solenoid

	Symbol	Description	Size	Weight (g)	Order code
	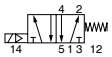	5/2 Single solenoid - Spring return	1 - 43 mm	770	**H1EWXBBL49D**
			2 - 56 mm	1190	**H2EWXBBL49D**
			3 - 71 mm	1470	**H3EWXBBL49D**
	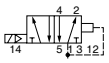	5/2 Single solenoid - Differential	1 - 43 mm	770	**H11WXBBL49D**
			2 - 56 mm	1190	**H21WXBBL49D**
			3 - 71 mm	1470	**H31WXBBL49D**
	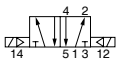	5/2 Double solenoid	1 - 43 mm	940	**H12WXBBL49D**
			2 - 56 mm	1360	**H22WXBBL49D**
			3 - 71 mm	1640	**H32WXBBL49D**
	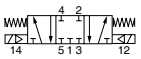	5/3 Closed Center (APB)	1 - 43 mm	940	**H15WXBBL49D**
			2 - 56 mm	1360	**H25WXBBL49D**
			3 - 71 mm	1640	**H35WXBBL49D**
	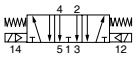	5/3 Vented Center	1 - 43 mm	940	**H16WXBBL49D**
			2 - 56 mm	1360	**H26WXBBL49D**
			3 - 71 mm	1640	**H36WXBBL49D**
	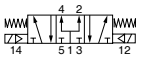	5/3 Pressurised Center	1 - 43 mm	940	**H17WXBBL49D**
			2 - 56 mm	1360	**H27WXBBL49D**
			3 - 71 mm	1640	**H37WXBBL49D**

Solenoid connectors & cable plug to be ordered separately. See solenoid section

H Series ISO 5599-1 - Sizes 1, 2 & 3
CNOMO operator without coil

	Symbol	Description	Size	Weight (g)	Order code
	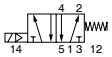	5/2 Single solenoid - Spring return	1 - 43 mm	650	**H1EWXBBNXXD**
			2 - 56 mm	1070	**H2EWXBBNXXD**
			3 - 71 mm	1350	**H3EWXBBNXXD**
	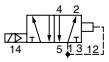	5/2 Single solenoid - Differential	1 - 43 mm	650	**H11WXBBNXXD**
			2 - 56 mm	1070	**H21WXBBNXXD**
			3 - 71 mm	1350	**H31WXBBNXXD**
	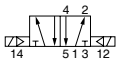	5/2 Double solenoid	1 - 43 mm	700	**H12WXBBNXXD**
			2 - 56 mm	1120	**H22WXBBNXXD**
			3 - 71 mm	1400	**H32WXBBNXXD**
	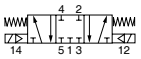	5/3 Closed Center (APB)	1 - 43 mm	700	**H15WXBBNXXD**
			2 - 56 mm	1120	**H25WXBBNXXD**
			3 - 71 mm	1400	**H35WXBBNXXD**
	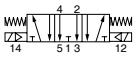	5/3 Vented Center	1 - 43 mm	700	**H16WXBBNXXD**
			2 - 56 mm	1120	**H26WXBBNXXD**
			3 - 71 mm	1400	**H36WXBBNXXD**
	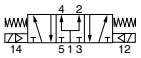	5/3 Pressurised Center	1 - 43 mm	700	**H17WXBBNXXD**
			2 - 56 mm	1120	**H27WXBBNXXD**
			3 - 71 mm	1400	**H37WXBBNXXD**

30 x 30 DIN Form A or 22 x 30 DIN Form B solenoid & solenoid connectors to be ordered separately. See solenoid section

Tel: +45 63 12 83 00 | Email: ps@hymatik.com | www.hymatik.com | Hvidkaervej 27a, DK-5250 Odense SV, Denmark

Bottom ported manifold & End plate - ISO 15407-1 - Sizes 02 & 01

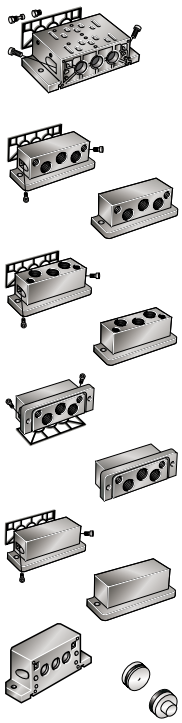

Description			Size	Port Size	Weight (g)	Order code
Two valve position manifold Including seal, fitting screws and plugs.		Int. pilot supply	02 - 18 mm	1/8 BSPP	200	**P2V-AM511PB**
			01 - 26 mm	1/4 BSPP	400	**P2V-BM512PB**
		Ext. pilot supply	02 - 18 mm	1/8 BSPP	200	**P2V-AM511NB**
			01 - 26 mm	1/4 BSPP	400	**P2V-BM512NB**
Side ported		Left end plate Including seal and fitting screws	02 - 18 mm	1/4 BSPP	180	**P2V-AM512GS**
			01 - 26 mm	3/8 BSPP	210	**P2V-BM513GS**
		Right end plate	02 - 18 mm	1/4 BSPP	180	**P2V-AM512HS**
			01 - 26 mm	3/8 BSPP	210	**P2V-BM513HS**
Top ported		Left end plate Including seal and fitting screws	02 - 18 mm	1/4 BSPP	180	**P2V-AM512GT**
			01 - 26 mm	3/8 BSPP	210	**P2V-BM513GT**
		Right end plate	02 - 18 mm	1/4 BSPP	180	**P2V-AM512HT**
			01 - 26 mm	3/8 BSPP	210	**P2V-BM513HT**
Bottom ported		Left end plate Including seal and fitting screws	02 - 18 mm	1/4 BSPP	180	**P2V-AM512GB**
			01 - 26 mm	3/8 BSPP	220	**P2V-BM513GB**
		Right end plate	02 - 18 mm	1/4 BSPP	180	**P2V-AM512HB**
			01 - 26 mm	3/8 BSPP	220	**P2V-BM513HB**
End cover		Left end plate Including seal and fitting screws	02 - 18 mm		190	**P2V-AM500G0**
			01 - 26 mm		240	**P2V-BM500G0**
		Right end plate	02 - 18 mm		190	**P2V-AM500H0**
			01 - 26 mm		240	**P2V-BM500H0**
Size manifolds adaptor plate			02 to 01		330	**P2V-AM500BE**
Plug		Left end plate	02 - 18 mm		4	**P2V-AK0P**
			01 - 26 mm		10	**P2V-BK0P**

Side ported individual subbase - ISO 15407-1 - Sizes 02 & 01



Description	Size	Port Size	Weight (g)	Order code
Invidual Subbase Can be used for External pilot supply or Single or Double pneumatic remote pilot	02 - 18 mm	1/8 BSPP	70	**PL02-01-70**
		1/8 NPT	70	**PL02-01-80**
	01 - 26 mm	1/4 BSPP	120	**PL01-02-70**
		1/4 NPT	120	**PL01-02-80**

Front ported manifold & End plate - ISO 15407-1 - Sizes 02 & 01



Description	Size	Port Size	Weight (g)	Order code
Two position manifold base Can be used for External pilot supply Cannot be used for remote pilot	02 - 18 mm	1/8 BSPP	140	**PJLP02-201-70**
		1/8 NPT	140	**PJLP02-201-80**
	01 - 26 mm	1/4 BSPP	700	**PJLP01-202-70**
		1/4 NPT	700	**PJLP01-202-80**
Two position manifold base Can be used for External pilot supply using #14 or Single or Double pneumatic remote pilot	01 - 26 mm	1/4 BSPP	730	**PJL01-202-70**
		1/4 NPT	730	**PJL01-202-80**
End plate kit	02 - 18 mm	1/4 BSPP	150	**PEJ02-02-70**
		1/4 NPT	150	**PEJ02-02-80**
	01 - 26 mm	3/8 BSPP	520	**PEJ01-03-70**
		3/8 NPT	520	**PEJ01-03-80**

Accessories



Description	Size	Weight (g)	Order code
Blanking plate	02 - 18 mm	40	**DX02BLK**
	01 - 26 mm	50	**DX01BLK**
Blanking plug	02 - 18 mm	10	**D02BD0**
	01 - 26 mm	20	**D01BD0**
Bolt, Washer and Nut	02 - 18 mm & 01 - 26 mm	120	**DX02M2MB**

Tel: +45 63 12 83 00 | Email: ps@hymatik.com | www.hymatik.com | Hvidkaervej 27a, DK-5250 Odense SV, Denmark

VDMA Side Ported Subbases

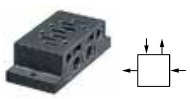

Description	Size	Port size	Weight (g)	Order code
Subbases VDMA Side port according to VDMA	1 - 43mm	G1/4	160	**P2N-VS512SD**
	2 - 56mm	G3/8	280	**P2N-WS513SD**
	3 - 71mm	G1/2	350	**P2N-YS514SD**

VDMA Bottom Ported Manifold





Description	Size	Port size	Weight (g)	Order code
VDMA Form C Bottom port according to VDMA	1 - 43mm	G1/4	240	**P2N-VM512MB**
	2 - 56mm	G3/8	360	**P2N-WM513MB**
	3 - 71mm	G1/2	700	**P2N-YM514MB**
VDMA Transition plate Size 1 to Size 3 **Kit includes:** Transition plate only	1 to 3	G1/4		**P2N-VM500AK**
VDMA Form D - End plate According to VDMA	1 - 43mm	G3/8	210	**P2N-VM513ES**
	2 - 56mm	G1/2	360	**P2N-WM514ES**
	3 - 71mm	G1	680	**P2N-YM518ES**
VDMA Isolation - Main galley According to VDMA **Kit includes:** (1) Isolator plug.	1 - 43mm			**P2N-VK0P**
	2 - 56mm			**P2N-WK0P**
	3 - 71mm			**P2N-YK0P**

Accessories



Description	Size	Port size	Weight (g)	Order code
Blanking plate **Kit includes:** (1) Blanking plate, (1) Gasket and (4) Mounting bolts	1 - 43mm	G1/4	100	**P2N-AA5B**
	2 - 56mm	G3/8	150	**P2N-BA5B**
	3 - 71mm	G1/2	200	**P2N-CA5B**

Side ported subbases



Description	Size	Port size	Weight	Order code BSP	Order code NPT
Single subbase with side ports 1 3 5 2 4 ports & 12 14	1 - 43mm	G1/4	0.16	**PL1-1/4-70**	**PL1-1/4-80**
	1 - 43mm	G3/8	0.16	**PL1-3/8-70**	
	2 - 56mm	G3/8	0.28	**PL2-3/8-70**	**PL2-3/8-80**
	2 - 56mm	G1/2		**P2N-HS514SS**	
	3 - 71mm	G1/2		**PL3-1/2-70**	**PL3-1/2-80**
	3 - 71mm	G3/4		**P2N-JS516SD**	

Bottom ported subbases



Description	Size	Port size	Weight	Order code BSP	Order code NPT
Single subbase with bottom ports 1 3 5 2 4 ports & 12 14	1 - 43mm	G1/4	0.37	**PD1-1/4-70**	**PD1-1/4-80**
	2 - 56mm	G3/8	0.59	**PD2-3/8-70**	**PD2-3/8-80**
	3 - 71mm	G1/2	0.59	**PD3-1/2-70**	

Size 1 bottom ported manifold

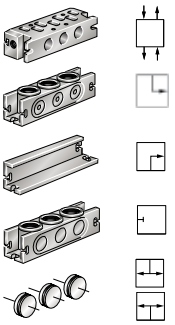

Description	Size	Port size	Weight	Order code
Manifold with bottom ports low profile	1 - 43mm	G1/4	0.2	**P2N-AM512MB**
Connecting block Top or bottom ported connecting block for above manifold "low profile"	1 - 43mm	G3/8	0.15	**P2N-AM513GT**
End End piece for above manifold "low profile"	1 - 43mm	no	0.06	**P2N-AM500J**
Intermediate supply Top or bottom ported intermediate supply for above manifold "low profile"	1 - 43mm	G3/8	0.14	**P2N-AM513BT**
Isolation plugs isolating seal for above manifold "low profile"	1 - 43mm		0.07	**P2N-AK0P**

Sizes 1 & 2 side ported manifold

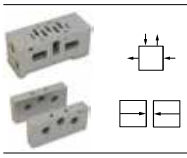

Description	Size	Port size	Weight	Order code
Manifold Manifold with side port	1 - 43mm	G1/4	0.24	**P2N-EM512MD**
	2 - 56mm	G3/8	0.21	**P2N-FM513MD**
End Side ported connecting kit for above manifold with side ports	1 - 43mm	G3/8	0.36	**P2N-EM513ES**
	2 - 56mm	G1/2	0.29	**P2N-FM514ES**

Tel: +45 63 12 83 00 | Email: ps@hymatik.com | www.hymatik.com | Hvidkaervej 27a, DK-5250 Odense SV, Denmark

Plug-in 15407-2, Size 02 (18mm - HB) & 01 (26mm - HA) End Plate Kits

Left and Right end plates, with pressure exhaust and auxilliary ports

Individual connection

	Description	ISO Size	Port size	Weight (g)	Order code
	No connector To be used with individually wired base	02 & 01	G3/8"	-	**PS5631011P**

Multiwiring connection

	Description	ISO Size	Port size	Weight (g)	Order code
	16-Points Terminal Strip	02 & 01	G3/8"	-	**PS5620L51P**
	25-Pin, D-Sub	02 & 01	G3/8"	-	**PS5620L21P**
	19-Pin, Round, Brad Harrison	02 & 01	G3/8"	-	**PS5620L31P**
	M23, 12-Pin	02 & 01	G3/8"	-	**PS5620L41P**
	M23, 19-Pin	02 & 01	G3/8"	-	**PS5620M21P**

Accessories

	Description	Protection	Length	Weight (g)	Order code
	25-Pin - D-Sub cable	IP40	3 meters	380	**P8LMH25M3A**
			9 meters	780	**P8LMH25M9A**
		IP65	9 meters	790	**P8LMH25B9A**

Adaptors for Industrial Communication

	Description	ISO Size	Port size	Weight (g)	Order code
	Turck BL76 Valve Driver Module Without 16 DO module 16 outputs and blank module to be ordered seaparely (See Turck BL67 section)	02 & 01	G3/8"	-	**PS5620T01P**
	Turck BL76 Valve Driver Module For configuration up to 16 solenoids Including 1 x 16 DO & 1 blank module	02 & 01	G3/8"	-	**PS5620T11P**
	Turck BL76 Valve Driver Module For configuration up to 32 solenoids Including 2 x 16 DO modules	02 & 01	G3/8"	-	**PS5620T21P**
	Industrial Communication Valve Driver Module For configuration up to 32 solenoids	02 & 01	G3/8"	-	**PS5620L61P**
	Moduflex Fieldbus module adaptor	02 & 01	G3/8"	-	**PS5620M41P**

For Turck BL67, Moduflex communication gateways and I/O modules, refer to respective sections in following pages.

Tel: +45 63 12 83 00 | Email: ps@hymatik.com | www.hymatik.com | Hvidkaervej 27a, DK-5250 Odense SV, Denmark

Plug-in 15407-2, Size 02 (18mm - HB) & 01 (26mm - HA) Manifold Kits

2 Position Front Ported Manifold



Description		ISO Size	Port size	Weight (g)	Order code
Non collective wiring	Terminal strip For single or double solenoid valves	01	G1/4"	520	**PS551154CP**
Collective wiring	Single address board For single solenoid valves	02	G1/8"	450	**PS561152JP**
		01	G1/4"	520	**PS551154JP**
	Double address board For double solenoid valves	02	G1/8"	450	**PS561152MP**
		01	G1/4"	520	**PS551154MP**
Extension Manifold Including ribbon cable	Single address board For single solenoid valves	02	G1/8"	450	**PS561152NP**
		01	G1/4"	520	**PS551154NP**
	Double address board For double solenoid valves	02	G1/8"	450	**PS561152PP**
		01	G1/4"	520	**PS551154PP**

2 Position Front and Bottom Ported Manifold



Description		ISO Size	Port size	Weight (g)	Order code
Non collective wiring	Terminal strip For single or double solenoid valves	01	G1/4"	520	**PS551164CP**
Collective wiring	Single address board For single solenoid valves	02	G1/8"	450	**PS561162JP**
		01	G1/4"	520	**PS551164JP**
	Double address board For double solenoid valves	02	G1/8"	450	**PS561162MP**
		01	G1/4"	520	**PS551164MP**
Extension Manifold Including ribbon cable	Single address board For single solenoid valves	02	G1/8"	450	**PS561162NP**
		01	G1/4"	520	**PS551164NP**
	Double address board For double solenoid valves	02	G1/8"	450	**PS561162PP**
		01	G1/4"	520	**PS551164PP**

Accessories



Description	Blocked ports	ISO Size	Port size	Weight (g)	Order code
Blanking Plate		02	G1/8"	-	**PS5634P**
		01	G1/4"	-	**PS5534P**
Manifold to Manifold gasket kit	No port plugged	02 & 01		-	**PS561AP**
	#1	02 & 01		-	**PS561BP**
	#1, 3 & 5	02 & 01		-	**PS561CP**
	#3 & 5	02 & 01		-	**PS561DP**

Parker Hannifin Corporation
Pneumatic Division - Europe

Tel: +45 63 12 83 00 | Email: ps@hymatik.com | www.hymatik.com | Hvidkaervej 27a, DK-5250 Odense SV, Denmark

Solenoid actuated Iso valve for multiple and centralised field bus (Plug-in)



- Size HA and HB (26mm and 18mm)
- Heavy duty and corrosion resistant body
- Internal led & rectifier
- Internal or external pilot supply with same valve
- Multiple connection, Sub D25, M23, Terminal block
- Communication with Turck BL67 Remote I/O System or Moduflex Bus

Operation information

Working pressure :	2,0 to 10 bar	
Working temperature :	-15 to +50°C	
	Size 02	**Size 01**
Flow (Qmax.) :	10,8 l/s	25,3 l/s
Flow (Qn) :	6,5 l/s	15,3 l/s

H Series ISO Plug-in 15407-2 - Sizes 02 & 01
With 24 Vdc / 1 W built-in coil
Manual override non locking, LED & surge suppressor

	Symbol	Description	Size	Weight (g)	Order code
 HB 18 mm	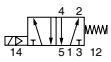	5/2 single solenoid - Spring return	02 - 18mm	130	**HBEVXBG0G9A**
			01 - 26mm	230	**HAEVXBG0G9A**
	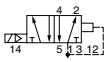	5/2 single solenoid - Differential	02 - 18mm	130	**HB1VXBG0G9A**
			01 - 26mm	230	**HA1VXBG0G9A**
	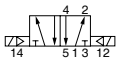	5/2 double solenoid	02 - 18mm	145	**HB2VXBG0G9A**
			01 - 26mm	245	**HA2VXBG0G9A**
 HA 26 mm	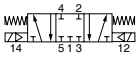	5/3 Closed center (APB)	02 - 18mm	145	**HB5VXBG0G9A**
			01 - 26mm	245	**HA5VXBG0G9A**
	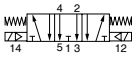	5/3 Vented center	02 - 18mm	145	**HB6VXBG0G9A**
			01 - 26mm	245	**HA6VXBG0G9A**
	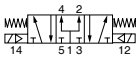	5/3 Pressurised center	02 - 18mm	145	**HB7VXBG0G9A**
			01 - 26mm	245	**HA7VXBG0G9A**

Tel: +45 63 12 83 00 | Email: ps@hymatik.com | www.hymatik.com | Hvidkaervej 27a, DK-5250 Odense SV, Denmark

Plug-in 5599-2, Sizes 1, 2 & 3 End Plate Kits

Left and Right end plates, with pressure exhaust and auxilliary ports

Individual connection

	Description	ISO Size	Port size	Weight (g)	Order code
	No connector To be used with individually wired base	Size 1	G1/2"	1360	**PS4031011CP**
		Size 2	G3/4"	1600	**PS4131011CP**
		Size 3	G3/4"	2800	**PS4231011CP**

Multiwiring connection

	Description	ISO Size	Port size	Weight (g)	Order code
	25-Pin, D-Sub	Size 1	G1/2"	1360	**PS4020L21CP**
		Size 2	G3/4"	1600	**PS4120L21CP**
		Size 3	G3/4"	2800	**PS4220L21CP**
	19-Pin, Round, Brad Harrison	Size 1	G1/2"	1360	**PS4020L31CP**
		Size 2	G3/4"	1600	**PS4120L31CP**
		Size 3	G3/4"	2800	**PS4220L31CP**
	19-Pin, M23	Size 1	G1/2"	1360	**PS4020M21CP**
		Size 2	G3/4"	1600	**PS4120M21CP**
		Size 3	G3/4"	2800	**PS4220M21CP**
	12-Pin, M23	Size 1	G1/2"	1360	**PS4020L41CP**
		Size 2	G3/4"	1600	**PS4120L41CP**
		Size 3	G3/4"	2800	**PS4220L41CP**

Accessories

	Description	Protection	Length	Weight (g)	Order code
	25-Pin - D-Sub cable	IP40	3 meters	380	**P8LMH25M3A**
			9 meters	780	**P8LMH25M9A**
		IP65	9 meters	790	**P8LMH25B9A**

Adaptors for Industrial Communication

	Description	ISO Size	Port size	Weight (g)	Order code
	Turck BL76 Valve Driver Module Without 16 DO module 16 outputs and blank module to be ordered seaparely (See Turck BL67 section)	Size 1	G1/2"	1400	**PS4020T01CP**
		Size 2	G3/4"	1600	**PS4120T01CP**
		Size 3	G3/4"	2800	**PS4220T01CP**
	Turck BL76 Valve Driver Module For configuration up to 16 solenoids Including 1 x 16 DO & 1 blank module	Size 1	G1/2"	1520	**PS4020T11CP**
		Size 2	G3/4"	1720	**PS4120T11CP**
		Size 3	G3/4"	2920	**PS4220T11CP**
	Turck BL76 Valve Driver Module For configuration up to 32 solenoids Including 2 x 16 DO modules	Size 1	G1/2"	1520	**PS4020T21CP**
		Size 2	G3/4"	1720	**PS4120T21CP**
		Size 3	G3/4"	2920	**PS4220T21CP**
	Industrial Communication Valve Driver Module For configuration up to 32 solenoids	Size 1	G1/2"	1580	**PS4020L61CP**
		Size 2	G3/4"	1800	**PS4120L61CP**
		Size 3	G3/4"	3000	**PS4220L61CP**
	Moduflex Fieldbus module adaptor	Size 1	G1/2"	1300	**PS4020M41CP**
		Size 2	G3/4"	1500	**PS4120M41CP**
		Size 3	G3/4"	2700	**PS4220M41CP**

For Turck BL67, Moduflex communication gateways and I/O modules, refer to respective sections in following pages.

Tel: +45 63 12 83 00 | Email: ps@hymatik.com | www.hymatik.com | Hvidkaervej 27a, DK-5250 Odense SV, Denmark

Plug-in 5599-2, Sizes 1, 2 & 3 Manifold Kits

Single Position Front Ported Manifold



Description		ISO Size	Port size	Weight (g)	Order code
Non collective wiring	Terminal strip For single or double solenoid valves	2 - 56 mm	G1/2"	-	**PS411158CCP**
		3 - 71 mm	G3/4"	-	**PS421150CCP**
Collective wiring	Single address board For single solenoid valves	2 - 56 mm	G1/2"	-	**PS411158JCP**
		3 - 71 mm	G3/4"	-	**PS421150JCP**
	Double address board For double solenoid valves	2 - 56 mm	G1/2"	-	**PS411158MCP**
		3 - 71 mm	G3/4"	-	**PS421150MCP**

Single Position Front & Bottom Ported Manifold



Description		ISO Size	Port size	Weight (g)	Order code
Non collective wiring	Terminal strip For single or double solenoid valves	1 - 43 mm	G3/8"	-	**PS401166CCP**
		2 - 56 mm	G1/2"	-	**PS411168CCP**
		3 - 71 mm	G3/4"	-	**PS421160CCP**
Collective wiring	Single address board For single solenoid valves	1 - 43 mm	G3/8"	-	**PS401166JCP**
		2 - 56 mm	G1/2"	-	**PS411168JCP**
		3 - 71 mm	G3/4"	-	**PS421160JCP**
	Double address board For double solenoid valves	1 - 43 mm	G3/8"	-	**PS401166MCP**
		2 - 56 mm	G1/2"	-	**PS411168MCP**
		3 - 71 mm	G3/4"	-	**PS421160MCP**

Accessories

	Description	ISO Size	Port size	Weight (g)	Order code
	Blanking Plate	1 - 43 mm	G3/8"	-	**PS4034CP**
		2 - 56 mm	G1/2"	-	**PS4134CP**
		3 - 71 mm	G3/4"	-	**PS4234CP**
	Insulating Plugs	1 - 43 mm	G3/8"	-	**PS4032CP**
		2 - 56 mm	G1/2"	-	**PS4132CP**
		3 - 71 mm	G3/4"	-	**PS4232CP**
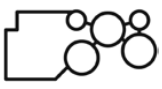	Manifold to Manifold Gasket Kit	1 - 43 mm	G3/8"	-	**PS4013P**
		2 - 56 mm	G1/2"	-	**PS4113P**
		3 - 71 mm	G3/4"	-	**PS4213P**

Tel: +45 63 12 83 00 | Email: ps@hymatik.com | www.hymatik.com | Hvidkaervej 27a, DK-5250 Odense SV, Denmark

Solenoid actuator Iso valve for multiple and centralised field bus

- Size 1, 2, 3
- Heavy duty and corrosion resistant body
- Internal led rectifier
- Internal or external pilot supply with same valve
- Multiple connection, SubD25, M23, Terminal block
- Communication with Turck BL67 Remote I/O System or Moduflex Bus



Operation information

Working pressure :	2,0 to 10 bar		
Working temperature :	-15 to +50°C		
	Size 1	**Size 2**	**Size 3**
Flow (Qmax.) :	34,5 l/s	69,0 l/s	130,8 l/s
Flow (Qn) :	20,8 l/s	42,0 l/s	83,7 l/s

H Series ISO 5599-2 - Sizes 1, 2 & 3
Solenoid operated ISO valve with operator and 24 Vdc / 2,7 W Plug-in coil



Symbol	Description	Size	Weight (g)	Order code
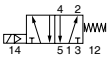	5/2 single solenoid - Spring return	1 - 43 mmmm	770	**H1EVXBG0B9D**
		2 - 56 mm	1190	**H2EVXBG0B9D**
		3 - 71 mm	1470	**H3EVXBG0B9D**
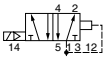	5/2 single solenoid - Differential	1 - 43 mmmm	770	**H11VXBG0B9D**
		2 - 56 mm	1190	**H21VXBG0B9D**
		3 - 71 mm	1470	**H31VXBG0B9D**
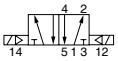	5/2 double solenoid	1 - 43 mmmm	940	**H12VXBG0B9D**
		2 - 56 mm	1360	**H22VXBG0B9D**
		3 - 71 mm	1640	**H32VXBG0B9D**
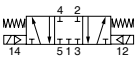	5/3 Closed center (APB)	1 - 43 mmmm	940	**H15VXBG0B9D**
		2 - 56 mm	1360	**H25VXBG0B9D**
		3 - 71 mm	1640	**H35VXBG0B9D**
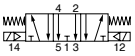	5/3 Vented center	1 - 43 mmmm	940	**H16VXBG0B9D**
		2 - 56 mm	1360	**H26VXBG0B9D**
		3 - 71 mm	1640	**H36VXBG0B9D**
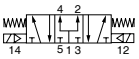	5/3 Pressurised center	1 - 43 mmmm	940	**H17VXBG0B9D**
		2 - 56 mm	1360	**H27VXBG0B9D**
		3 - 71 mm	1640	**H37VXBG0B9D**

H Series ISO 5599-2 - Sizes 1, 2 & 3
Solenoid operated ISO valve with operator without Plug-in coil



Symbol	Description	Size	Weight (g)	Order code
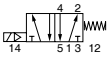	5/2 single solenoid - Spring return	1 - 43 mmmm	650	**H1EVXBGNXXD**
		2 - 56 mm	1070	**H2EVXBGNXXD**
		3 - 71 mm	1350	**H3EVXBGNXXD**
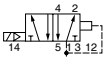	5/2 single solenoid - Differential	1 - 43 mmmm	650	**H11VXBGNXXD**
		2 - 56 mm	1070	**H21VXBGNXXD**
		3 - 71 mm	1350	**H31VXBGNXXD**
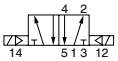	5/2 double solenoid	1 - 43 mmmm	700	**H12VXBGNXXD**
		2 - 56 mm	1120	**H22VXBGNXXD**
		3 - 71 mm	1400	**H32VXBGNXXD**
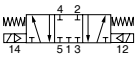	5/3 Closed center (APB)	1 - 43 mmmm	700	**H15VXBGNXXD**
		2 - 56 mm	1120	**H25VXBGNXXD**
		3 - 71 mm	1400	**H35VXBGNXXD**
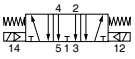	5/3 Vented center	1 - 43 mmmm	700	**H16VXBGNXXD**
		2 - 56 mm	1120	**H26VXBGNXXD**
		3 - 71 mm	1400	**H36VXBGNXXD**
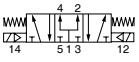	5/3 Pressurised center	1 - 43 mmmm	700	**H17VXBGNXXD**
		2 - 56 mm	1120	**H27VXBGNXXD**
		3 - 71 mm	1400	**H37VXBGNXXD**

Plug-in Coil for 5599-2 ISO Valve - Sizes 1, 2 &3



Description	Voltage	Weight (g)	Order code
Plug-in coil	12 Vdc	-	**PS404145P**
	24 Vdc	-	**PS4041B9P**
	24 Vac	-	**PS404142P**
	120 Vac	-	**PS404123P**
	240 Vac	-	**PS404157P**

Tel: +45 63 12 83 00 | Email: ps@hymatik.com | www.hymatik.com | Hvidkaervej 27a, DK-5250 Odense SV, Denmark

Sandwich regulator for Plug-in or not Plug-in ISO 15407 (Sizes 02 & 01) and 5599 (Sizes 1, 2 & 3)

Order chart



Function Description see below

PS40	37	1	6	6	CP

ISO Size	
ISO 15407	
PS56	Size 02 (HB - 18 mm)
PS55	Size 01 (HA - 26 mm)
ISO 5599	
PS40	Size 1 (H1 - 43 mm)
PS41	Size 2 (H2 - 56 mm)
PS42	Size 3 (H3 - 71 mm)

Connecting version	
37	ISO-1 : For Non Plug-in Valve
38	ISO-2 : For Plug-in Valve

Regulator function	
1	Common Pressure Regulator
2	Independent Pressure Regulator

ISO Version	
P	For ISO 15407
CP	For ISO 5599

Port Regulator / Gauge*	
0	Line By-Pass Plate**
1	0-2 Bar - without gauge
2	0-4 Bar - without gauge
3	0-8 Bar - without gauge
4	0-2 Bar - with gauge
5	0-4 Bar - with gauge
6	0-8 Bar - with gauge

* For Common Pressure Regulator Option, Regulator Gauge callout must be the same number for both port #4 and Port #2 (Example: 166)

** For H1, H2 & H3 only. Pressure Line By-Pass Option can only be used with Independent Pressure Regulators

Pressure Regulators functions

Common port regulation

Provides adjustable regulated air pressure to the valves #1 port which gives the same regulated pressure to both the #2 and #4 port of the manifold or subbase. The regulator is always on the 14 end of the valve.



For HB & HA



For H1, H2 & H3

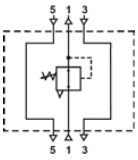

Part number code 1 X X

Independent port regulation

Single Port Regulator

Provides regulated pressure to both ports. Pressure regulation can occur out of the #2 or #4 port of the valve. Full line pressure would be provided with a pass plate.



For H1, H2 & H3

Regulation on port #4

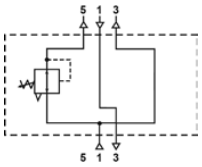

Part number code 2 X 0

Regulation on port #2

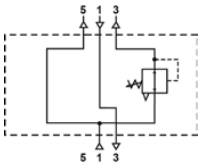

Part number code 2 0 Y

Dual Port Regulator

When using an independent Pressure Sandwich Regulator, the cylinder outlet ports are reversed. The 12 end energizes the #2 port.
The 3-position CE and PC functions are also reversed.



For HB & HA



For H1, H2 & H3

Regulation on both ports #4 & #2

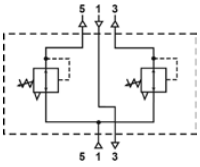

Part number code 2 X Y

Tel: +45 63 12 83 00 | Email: ps@hymatik.com | www.hymatik.com | Hvidkaervej 27a, DK-5250 Odense SV, Denmark

Sandwich regulator with Gauge

	ISO Size	Regulator function	Pressure On port 4 and / or port 2	Order code ISO-1 Non Plug-in	Order code ISO-2 Plug-in
	02 - 18 mm	Common	0 to 4 bar	**PS5637155P**	**PS5638155P**
			0 to 8 bar	**PS5637166P**	**PS5638166P**
		Independent	0 to 4 bar	**PS5637255P**	**PS5638255P**
			0 to 8 bar	**PS5637266P**	**PS5638266P**
	01 - 26 mm	Common	0 to 4 bar	**PS5537155P**	**PS5538155P**
			0 to 8 bar	**PS5537166P**	**PS5538166P**
		Independent	0 to 4 bar	**PS5537255P**	**PS5538255P**
			0 to 8 bar	**PS5537266P**	**PS5538266P**
	1 - 43 mm	Common	0 to 4 bar	**PS4037155CP**	**PS4038155CP**
			0 to 8 bar	**PS4037166CP**	**PS4038166CP**
		Independent	0 to 4 bar	**PS4037255CP**	**PS4038255CP**
			0 to 8 bar	**PS4037266CP**	**PS4038266CP**
	2 - 56 mm	Common	0 to 4 bar	**PS4137155CP**	**PS4138155CP**
			0 to 8 bar	**PS4137166CP**	**PS4138166CP**
		Independent	0 to 4 bar	**PS4137255CP**	**PS4138255CP**
			0 to 8 bar	**PS4137266CP**	**PS4138266CP**
	3 - 71 mm	Common	0 to 4 bar	**PS4237155CP**	**PS4238155CP**
			0 to 8 bar	**PS4237166CP**	**PS4238166CP**
		Independent	0 to 4 bar	**PS4237255CP**	**PS4238255CP**
			0 to 8 bar	**PS4237266CP**	**PS4238266CP**

How to Configure Sandwich Regulator / Valve Combinations

Ordering Components

- Manifold or Subbase Kit required.
- Sandwich Regulator Kit configured for Internal Pilot as standard.
- Order valve as External Pilot.

Internal Pilot Configuration

Pressure in Base Port 1 feeds regulator configured for Internal Pilot which feeds valve configured for External Pilot.

External Pilot Configuration - H1, H2, H3

An External Pilot pressure in port 12 or 14 of the base feeds threw the Sandwich Regulator 12 or 14 galley directly to the 12/14 pilot of the valve. This configuration takes an External Pilot from the 12 port of the base and passes it threw the regulator to feed the 12 galley of the valve.

Sandwich Regulator Accessories

	Description	Pressure range	w (g)	Order code
	Gauge kit Including: Gauge 1/8" female to 1/8" female coupling 1/8" male to 1/8" male long nipple	0 to 8 bar	80	**PS5651160P**

Sandwich Flow Control

	ISO Size	w (g)	Order code ISO-1 Non Plug-in	Order code ISO-2 Plug-in
	02 - 18 mm	180	**PS5635P**	**PS5642P**
	01 - 26 mm	240	**PS5535P**	**PS5542P**
	1 - 43 mm	340	**PS4035CP**	**PS4042CP**
	2 - 56 mm	520	**PS4135CP**	**PS4142CP**
	3 - 71 mm	1180	**PS4235CP**	**PS4242CP**

Note:

- Both adjustment screws are located on the same 12 end of the unit
- Sandwich Flow Control mounts with its own studs, which means the valve uses standard bolts for mounting
- Sandwich Flow Control is not to be used as a shut off device and is not bubble tight when needles are fully turned down

ISOMAX - ISO 15407-1 - Sizes 02 & 01

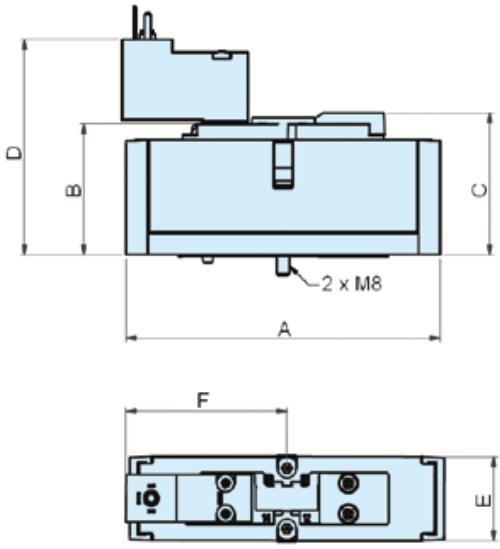

	A	B	C	D	E	F
ISOMAX 02	80	41	44,5	67,8	18	51,2
ISOMAX 01	100	42	45,5	68,8	26	51,2

ISOMAX - ISO 5599-1 - Sizes 1, 2 & 3

With P2F operator **With EV30 operator**

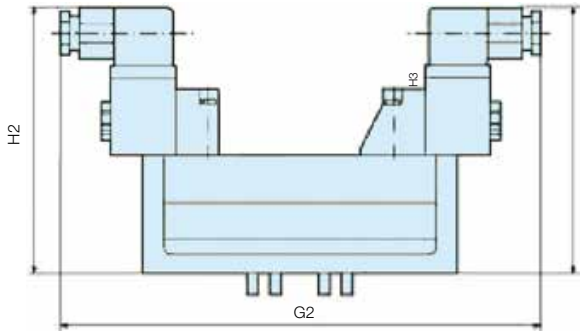

With EV310 operator

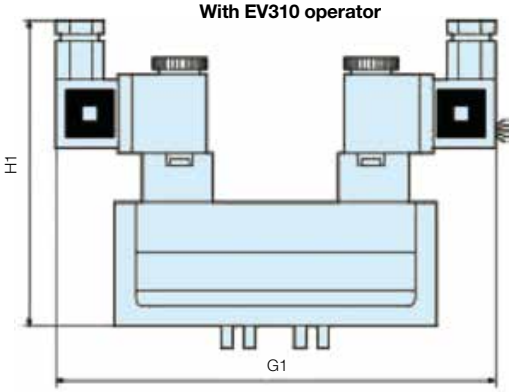

Pneumatically actuated

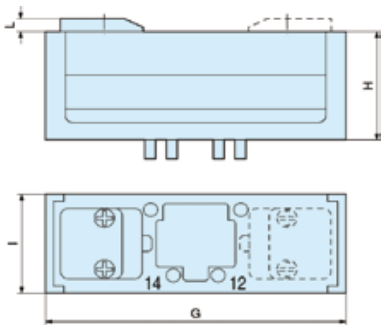

	G	G1	G2	H	H1	H2	I	L
Size 1	120	164	202,5	47	115	119	42	5
Size 2	140	179,5	218	58,5	126,5	130	54	5
Size 3	170	198	235,5	71	139	142,5	68	5

Tel: +45 63 12 83 00 | Email: ps@hymatik.com | www.hymatik.com | Hvidkaervej 27a, DK-5250 Odense SV, Denmark

15 mm DIN Form C solenoid operators and connectors

P2E Operator

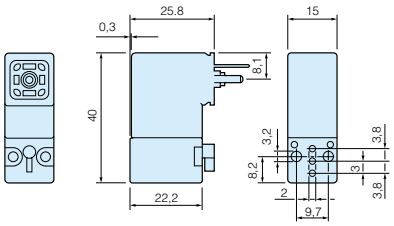

Connector with standard screw

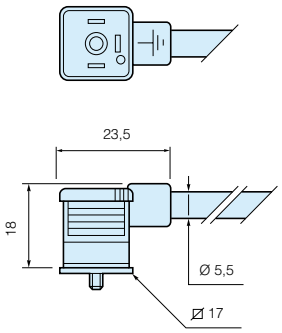

Connector with large headed screw

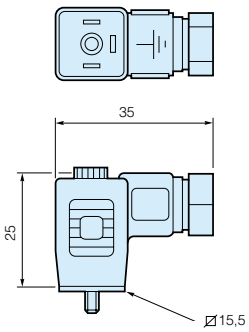

CNOMO 22 x 30 solenoid operators and connectors

P2F Operator with 30 x 30 DIN form A coil

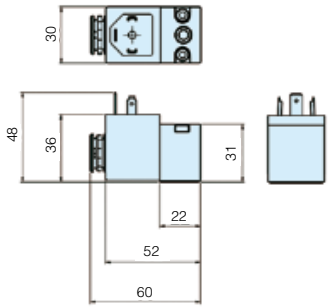

EV30 Operator with 30 x 30 DIN form A coil

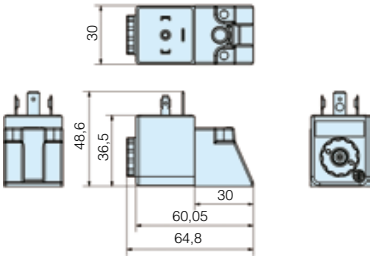

30 x 30 DIN form A connector

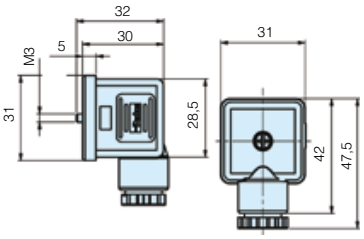

EV310 Operator with 22 x 30 DIN form B coil

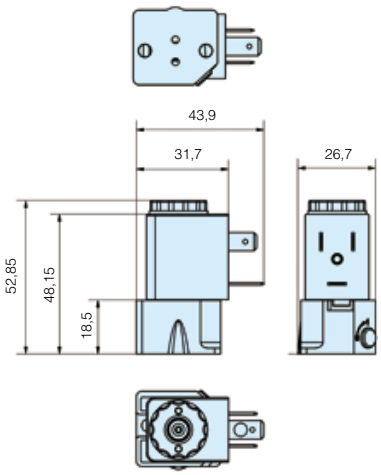

22 x 30 DIN form B connector

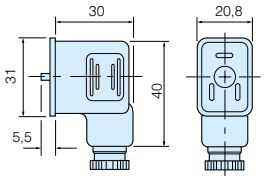

Side ported individual subbase - ISO 15407-1 - Sizes 02 & 01

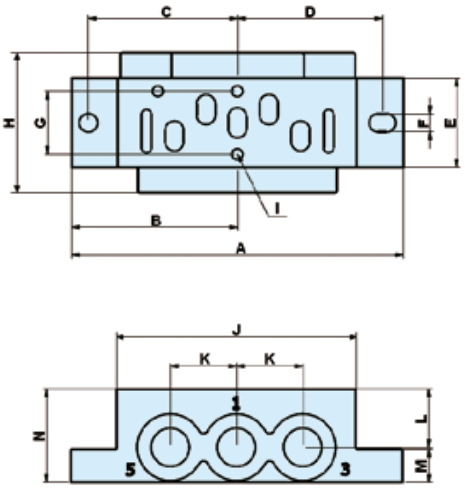

		Size	A	B	C	D	E	F	G	H	I	J	K	L	M	N	O	P
PL02-01-70	**BSPP**	02	80	40	35	33.75	19	5.5	12.5	27	M8	50	16	14	8	22.5	1/8	1/8
PL02-01-80	**NPT**	02	80	40	35	33.75	19	5.5	12.5	27	M8	50	16	14	8	22.5	1/8	1/8
PL01-02-70	**BSPP**	01	100	50	45	43.75	27	5.5	19	42,5	M8	72	20	17,5	10	28	1/4	1/8
PL01-02-80	**NPT**	01	100	50	45	43.75	27	5.5	19	42,5	M8	72	20	17,5	10	28	1/4	1/8

Front ported manifold & End plate - ISO 15407-1 - Sizes 02 & 01

		Size	A	B	C	D	E	F	G	H
PJLP02-201-70	**BSPP**	02	38,5	80	-	-	38	-	-	-
PJLP02-201-80	**NPT**	02	38,5	80	-	-	38	-	-	-
PJLP01-202-70	**BSPP**	01	55	100	-	-	54	-	-	-
PJLP01-202-80	**NPT**	01	55	100	-	-	54	-	-	-
PJL01-202-70	**BSPP**	01	55	100	-	-	54	-	-	-
PJL01-202-80	**NPT**	01	55	100	-	-	54	-	-	-
PEJ02-02-70	**BSPP**	02	38,5	80	12	Ø4,2	-	14	18	70
PEJ02-02-80	**NPT**	02	38,5	80	12	Ø4,2	-	14	18	70
PEJ01-03-70	**BSPP**	01	55	100	24	Ø5,5	-	17	22	90
PEJ01-03-80	**NPT**	01	55	100	24	Ø5,5	-	17	22	90

PJLP01-201-70
PJLP01-202-70

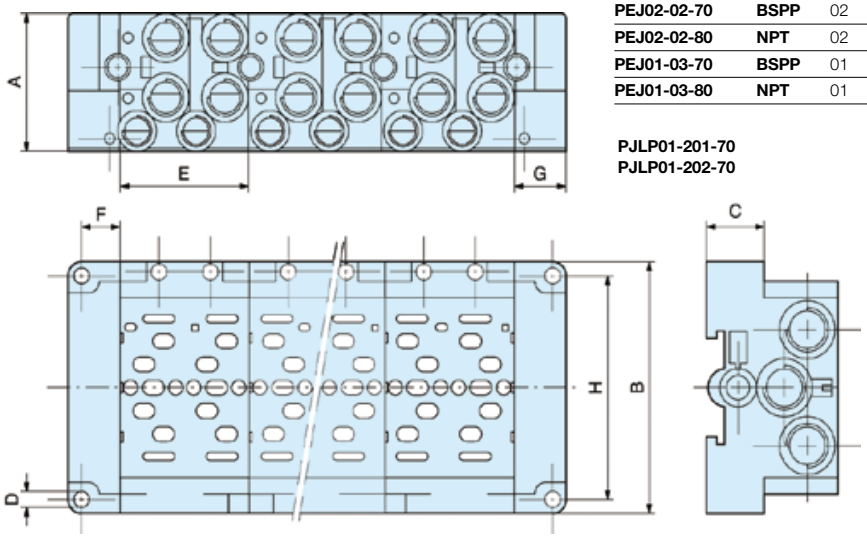

Bottom ported manifold - ISO 15407-1 - Sizes 02 & 01

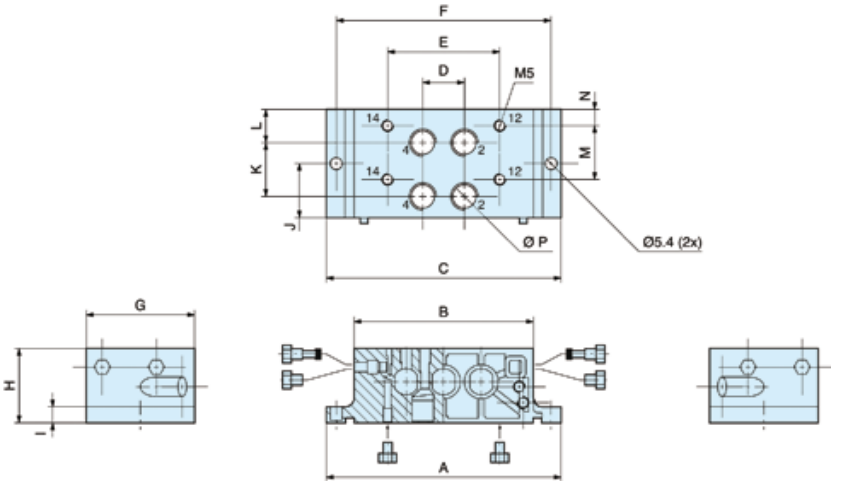

	Size	A	B	C	D	E	F	G	H	I	J	K	L	M	N	P
P2V-AM511PB	02	102	74	74,6	16	43	92	38	26	7	19	19	11	19	5	G1/8
P2V-BM512PB	01	118	90	90,6	21	56,5	108	54	37	8	27	27	16,5	27	8	G1/4

Bottom ported End plate - ISO 15407-1 - Sizes 02 & 01

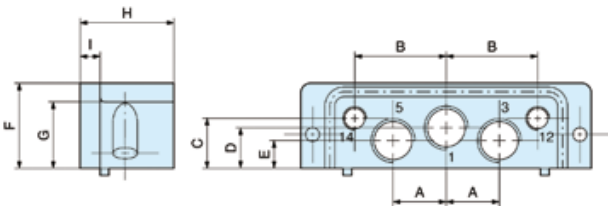

	Size	Port size 1,2,3	Port size 12, 14	A	B	C	D	E	F	G	H	I
P2V-AM512XX and P2V-AM512XX	02	G1/4	G1/8	17	29	21	18,5	9,5	35,5	28	33	7
P2V-BM513XX and P2V-BM513XX	01	G3/8	G1/8	21,5	37	20	16	11	34,5	28	38	8

Transfer plate size 01 to size 02 for above bottom ported manifold

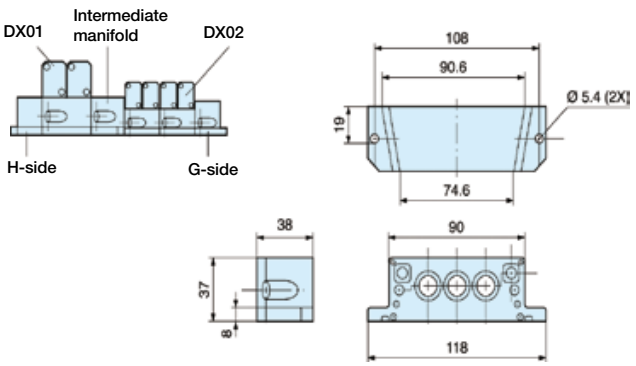

Tel: +45 63 12 83 00 | Email: ps@hymatik.com | www.hymatik.com | Hvidkaervej 27a, DK-5250 Odense SV, Denmark

ISO 5599-1 Subbase & Manifolds

VDMA Side Ported Subbases

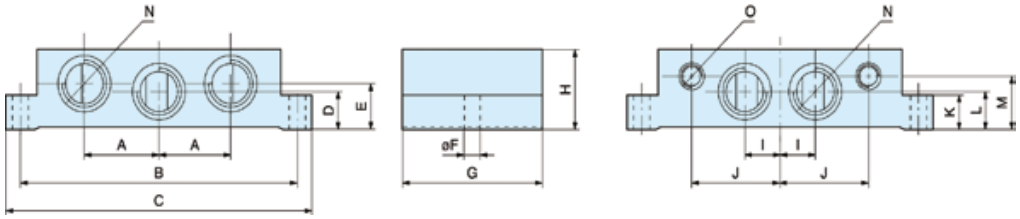

Order code	ISO Size	Port Size	A	B	C	D	E	F	G	H	I	J	K	L	M	N	O
P2N-VS512SD	1	G1/4	21,5	98	110	11	20	5,5	48	32	12	29	10	11	23	G1/4	G1/8
P2N-WS513SD	2	G3/8	28	112	124	14	26	6,6	56	40	15	37	13	14	30	G3/8	G1/8
P2N-YS514SD	3	G1/2	34	136	149	17	17	6,6	71	32	16	45	18	17	22	G1/2	G1/8

VDMA Bottom Ported Manifold

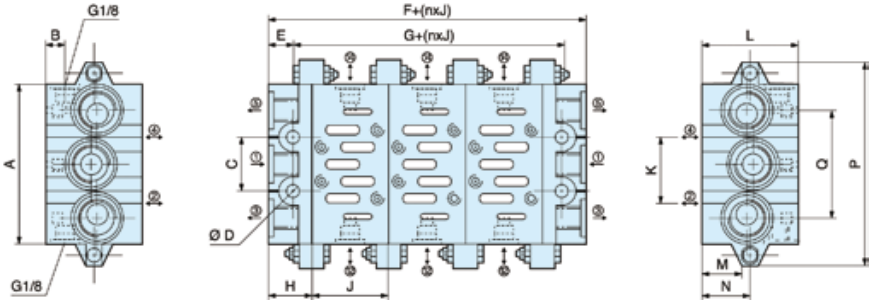

Order code	ISO Size	Port 1, 3, 5	Port 2, 4	A	B	C	D	E	F	G	H	J	K	L	M	N	O	P
P2N-VM512MB	1	G3/8	G1/4	85	8,5	28	7	11	44	22	22	43	26	46	21	24	56	110
P2N-WM513MB	2	G1/2	G3/8	100	9	35	9	13	52	26	26	56	30	47	22	24	68	135
P2N-YM514MB	3	G1	G1/2	140	10	52	12	15	60	30	30	71	38	56	31	34	104	190

Side ported subbases

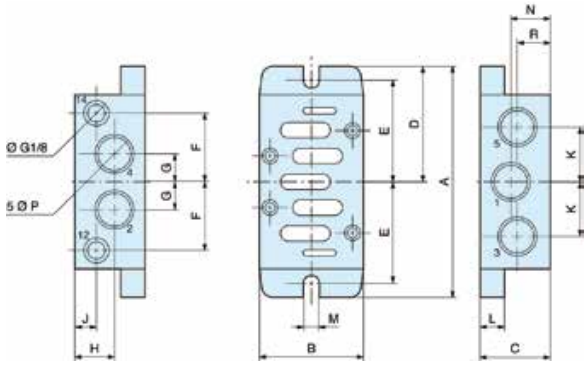

Order code	ISO Size	ØP	A	B	C	D	E	F	G	H	J	K	L	M	N	R
PL1-1/4-70	1	G1/4	110	46	29	55	49	30	11	17,75	17,75	22	6	5,5	17,75	17,75
PL2-3/8-70	2	G3/8	124	56	37	62	55	37	14,5	22,5	14	28	6	5,5	22,5	14,5
P2N-JS516SD	3	G3/4	149	71	60	74,5	68	45	21	33	10	40	18	6,6	37,5	22,5

Tel: +45 63 12 83 00 | Email: ps@hymatik.com | www.hymatik.com | Hvidkaervej 27a, DK-5250 Odense SV, Denmark

Bottom ported subbases

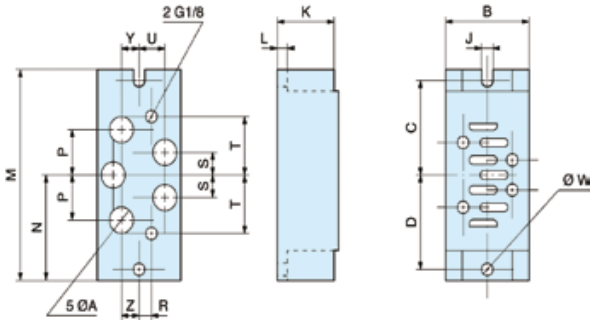

Order code	ISO Size	A	B	C	D	J	K	L	M	N	P	R	S	T	U	W	Y	Z
PD1-1/4-70	1	G1/4	46	49	49	5,5	29	6	110	55	22	10	11	30	10	5,5	10	10
PD2-3/8-70	2	G3/8	56	55	55	5,5	37	6	124	62	29	10	14,5	37	12,5	5,5	12,5	12,5
PD3-1/2-70	3	G1/2	77	68	68	6,6	32	18	149	74,5	34	10	17	45	17	6,5	17	17

Size 1 bottom ported manifold

Manifold P2N-AM512MB

Connecting block P2N-AM513GT

End piece P2N-AM500J

Intermediate supply P2N-AM513BT

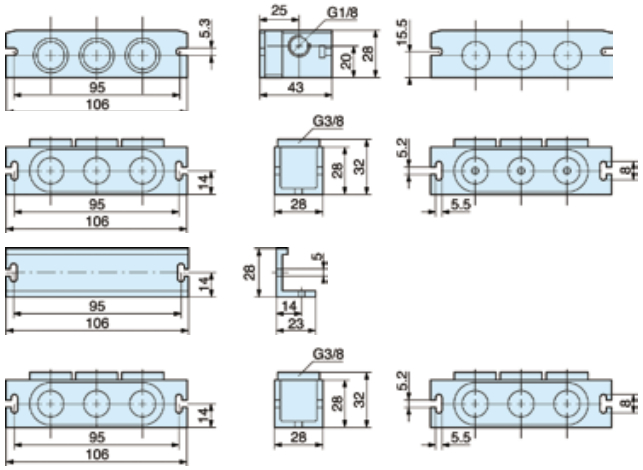

Sizes 1 & 2 side ported manifold

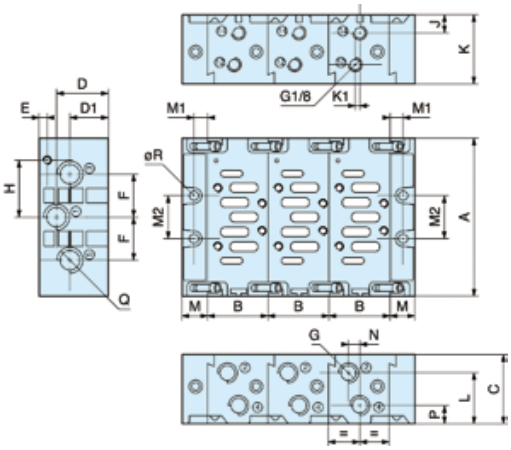

Order code	A	B	C	D	D1	E	F	G	H	J	K	K1	L	M	M1	M2	N	P	Q	R
P2N-EM . . .	110	43	48	35,5	26,5	5,5	28	G1/4	36	15,5	35	3	32	20	11	28	12	12,5	G3/8	6
P2N-FM . . .	129	56	60	44,5	35,5	6	34,5	G3/8	45	16	41,5	3	41	24	13	35	12,5	16	G1/2	8

Tel: +45 63 12 83 00 | Email: ps@hymatik.com | www.hymatik.com | Hvidkaervej 27a, DK-5250 Odense SV, Denmark

H Series ISO Valves

HA / HB Series - ISO 15407-1

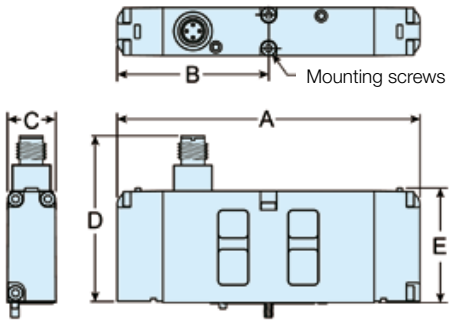

	A	B	C	D	E
HB	113	56	18	61	43
HA	130	65	26	61	42

HA / HB Series - ISO 15407-2

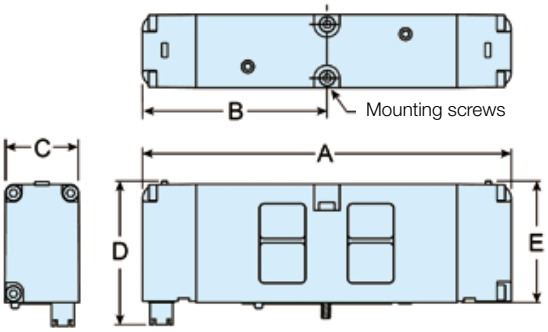

	A	B	C	D	E
HB	113	56	18	50	43
HA	130	65	26	50	42

H1 / H2 / H3 Series - ISO 5599-1

CNOMO Operator or Remote Pilot

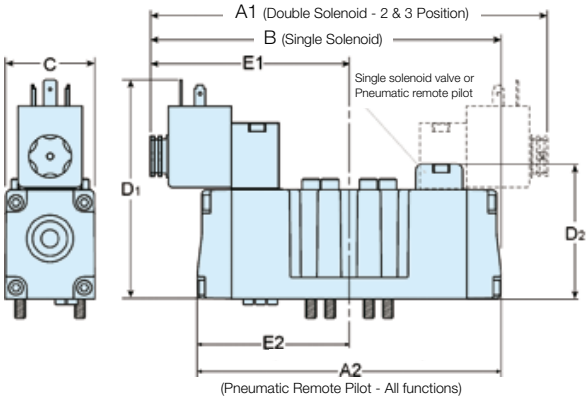

	A1	A2	B	C	D1	D2	E1	E2
H1	186	142	164	42	109	63,5	93	71
H2	212	168	190	55	122	76	106	84
H3	241	177	209	55	122	76	121	89

H1 / H2 / H3 Series - ISO 5599-2

Plug-in and M12 Connector Versions

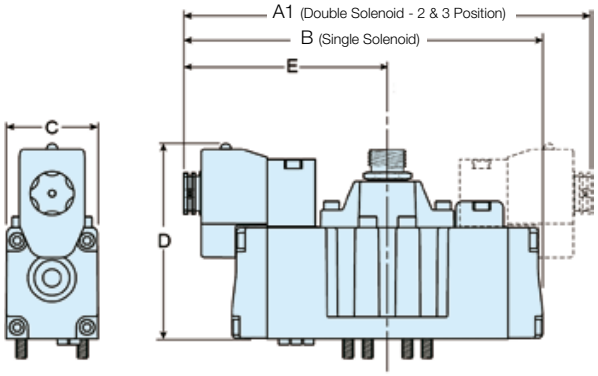

	A	B	C	D	E
H1	186	164	42	90	93
H2	212	190	55	103	106
H3	241	209	55	103	121

Tel: +45 63 12 83 00 | Email: ps@hymatik.com | www.hymatik.com | Hvidkaervej 27a, DK-5250 Odense SV, Denmark

H Series ISO Valves Subbases

HA Series - ISO 15407-1 & -2

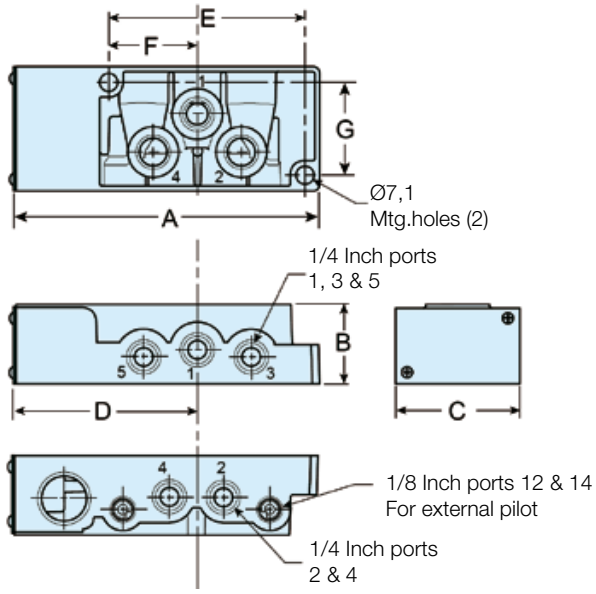

	A	B	C	D	E	F	G
HA	124	32,5	50,8	74	36,2	80,2	37,9

H1 / H2 / H3 Series - ISO 5599-1 & -2

Side Ported Subbase

Bottom Ported Subbase

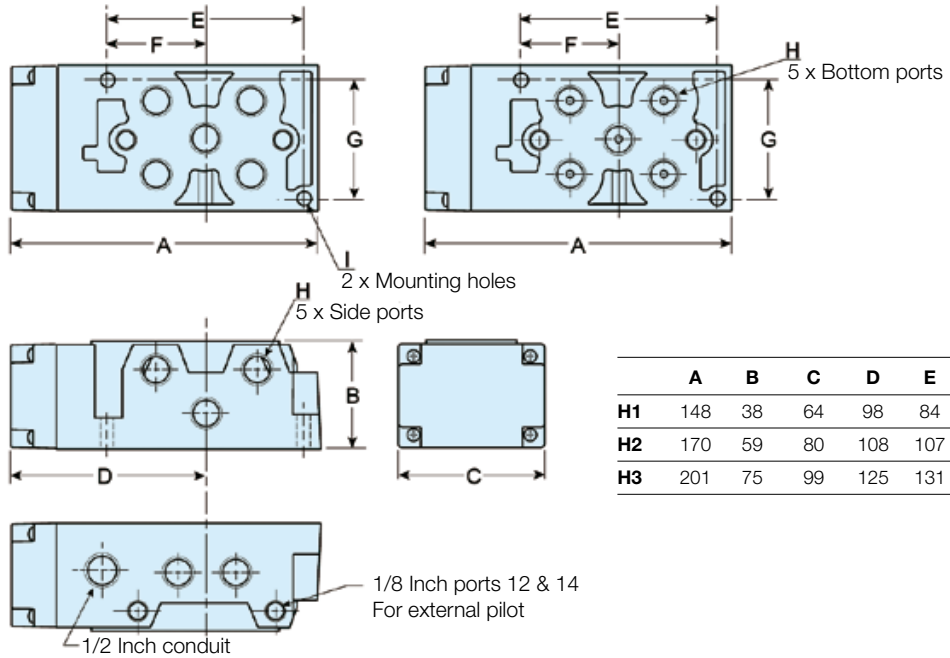

	A	B	C	D	E	F	G	H	I
H1	148	38	64	98	84	40	51	3/8"	5,5
H2	170	59	80	108	107	52	65	1/2"	7,1
H3	201	75	99	125	131	64	82	3/4"	9

Tel: +45 63 12 83 00 | Email: ps@hymatik.com | www.hymatik.com | Hvidkaervej 27a, DK-5250 Odense SV, Denmark

H Series ISO Valve Manifolds

HA/HB Series - ISO 15407-2

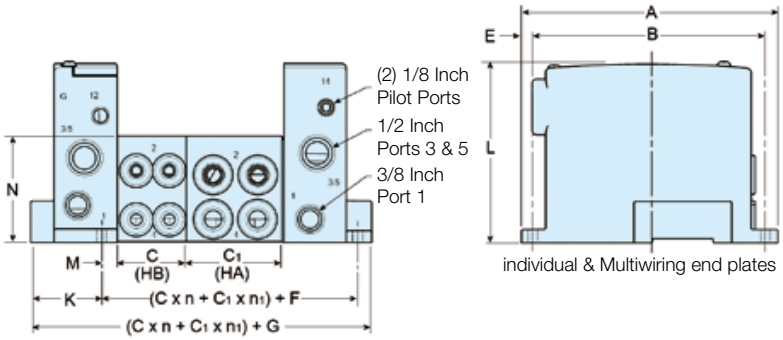

n = Number of HB bases C = HB Series
n1 = Number of HA bases C1 = HA Series

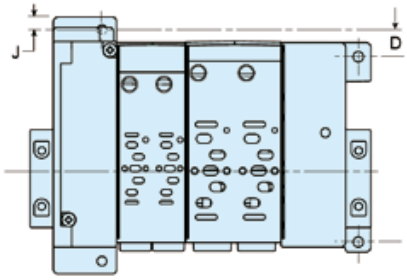

	A	B	C	C1	D	E	F
HA/HB	152	137	40,8	56,8	16	7,5	54,4

	G	H	J	K	L	M	N
HA/HB	104,6	109,8	4	42,7	106	8,4	63

H1 / H2 / H3 Series - ISO 5599-2

H1

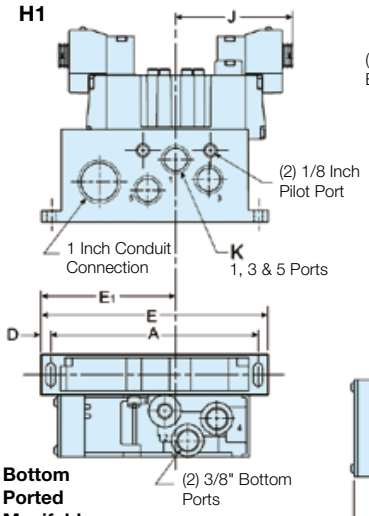

Bottom Ported Manifold

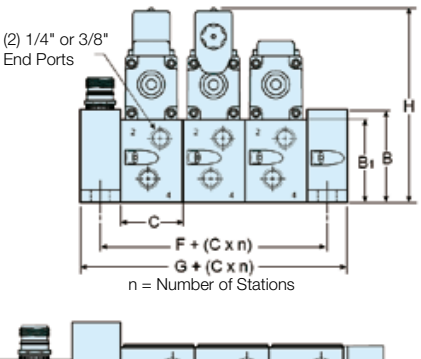

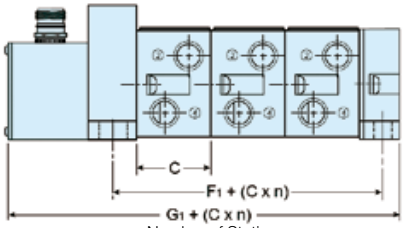

H2 / H3

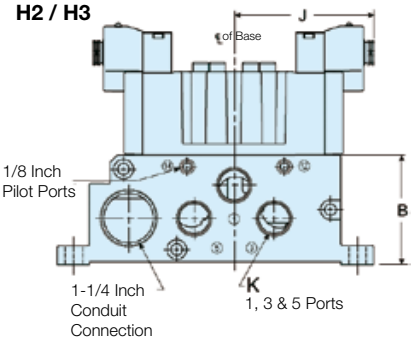

	A	B	B1	C	D	E	E1	F	F1	G	G1	H	J	K
H1	165	73	67	50	8	182	108	32	-	63,5	86	157	93	1/2"
H2	215	85	-	56	12	239	134	30	33	60	96	188	106	3/4"
H2	265	105	-	71	15	295	159	33	41	63	111	208	-	1"

Tel: +45 63 12 83 00 | Email: ps@hymatik.com | www.hymatik.com | Hvidkaervej 27a, DK-5250 Odense SV, Denmark

Sandwich Regulator with Gauge

HA / HB Series

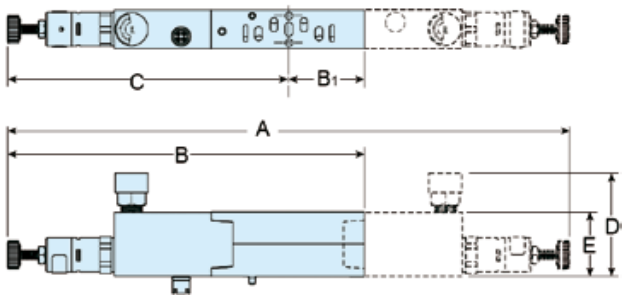

	A	B	B1	C	D	E
HB	261	156	26	130	66	30
HA	254	163	36	127	69	30

H1 Series

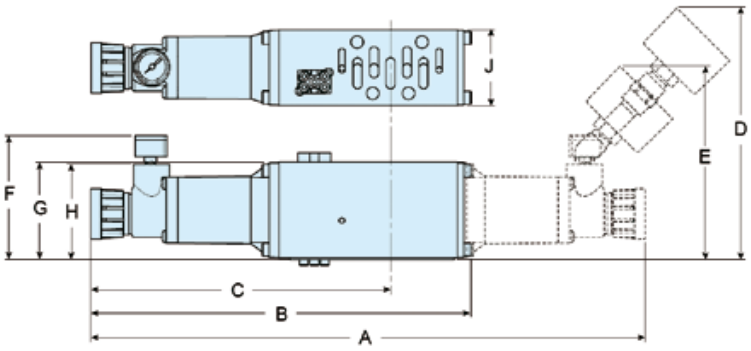

Liquid Gauge & Large Air Gauge Dimensions

	A	B	C	D	E	F	G	H	J
H1	301	207	163	138	108	72	53	52	41

H2 / H3 Series

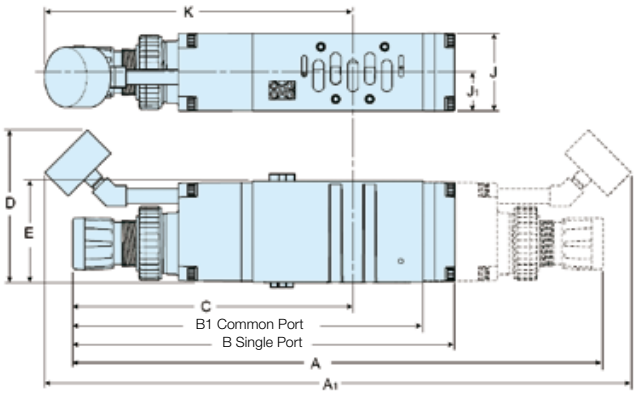

	A	A1	B	B1	C	D	E	J	J1	K
H2	372	411	268	250	196	107	71	55	27	216
H3	398	436	293	271	213	107	75	64	32	231

Tel: +45 63 12 83 00 | Email: ps@hymatik.com | www.hymatik.com | Hvidkaervej 27a, DK-5250 Odense SV, Denmark

Sandwich Flow Control

HA Series

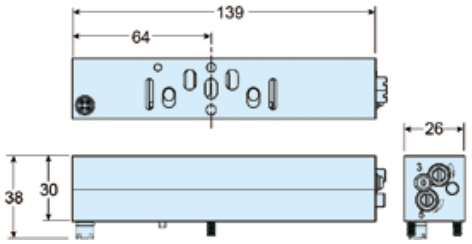

HB Series

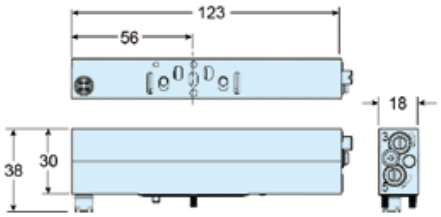

H1 Series

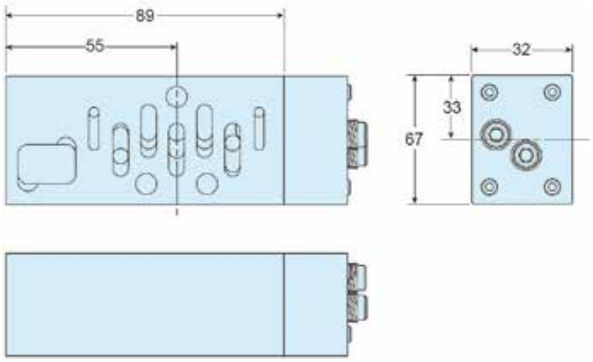

H2 Series

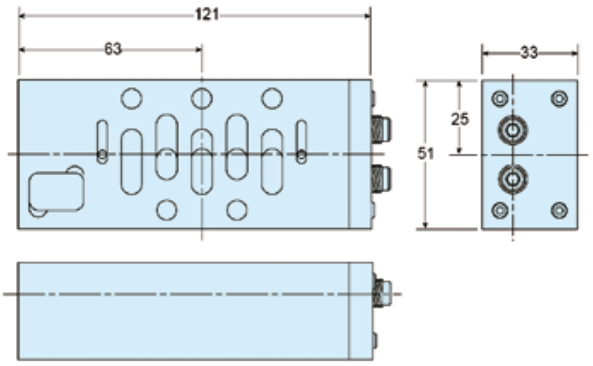

H3 Series

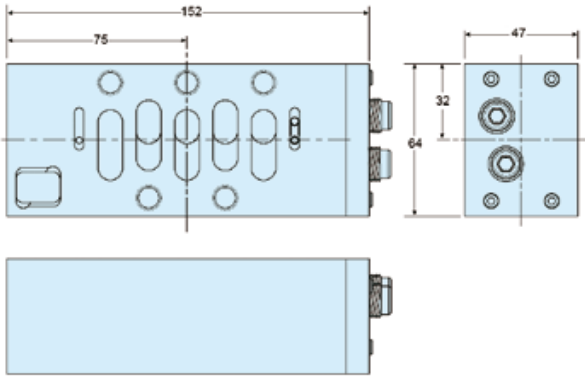

Tel: +45 63 12 83 00 | Email: ps@hymatik.com | www.hymatik.com | Hvidkaervej 27a, DK-5250 Odense SV, Denmark

Maximum Solenoids Energized Simultaneously

HA HB code	Voltage D-Sub	25-pin round	19-pin M23	Single 12-pin		
24 V DC	B9 / G9	24	16	8	32	
120 V AC*	23	24	16	8	32	
H1 H2 H3	Voltage code	25-pin D-Sub	19-pin round	Single 12-pin M23	Industrial Commu- nication	SAM 3.0
12 V DC	45	13	13	8	N/A	N/A
24 V AC*	42	24	16	8	N/A	N/A
24 V DC	B9	20	16	8	21	4
120 V AC*	23	24	16	8	N/A	N/A

* Not CSA certified for 25-pin, D-Sub option.

19-Pin Round Brad Harrison

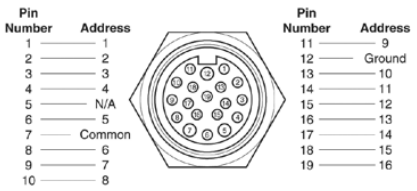

Face View - Male 19-Pin Connector

19-Pin Round Cable Specifications

Common Pin "7" is rated for 8 amps. Cable common wire must be greater than total amperage of solenoids on Add-A-Fold assembly.

Example:- 8 station manifold, 16 solenoids,
120VAC - 16 x .039 amps = .63 total amp rating.
NEMA 4 rated with properly assembled NEMA 4 rated cable.

Brad Harrison #333030P80M050	16.40 ft. (Female to Male Cable)
Brad Harrison #333030P80M0100	32.80 ft. (Female to Male Cable)

25-Pin, D-Sub Connector (Male)

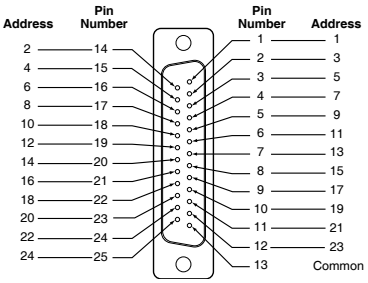

Face View - Male D-Sub, 25-Pin Connector

25-Pin, D-Sub Cable (Female)

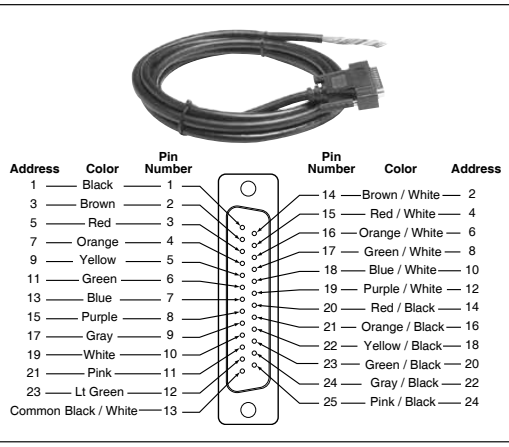

25-Pin, D-Sub Cable Specifications

Common Pin "13" is rated for 3 amps. Common wire rating must be greater than total amperage of all solenoids on a Add-A-Fold assembly.

IP65 rated with properly assembled IP65 rated cable.

M23, 12-Pin Round Connector (Male)

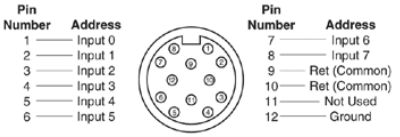

Face View - Male M23, 12-Pin Connector

M23, 12-Pin Round Connector (Female)

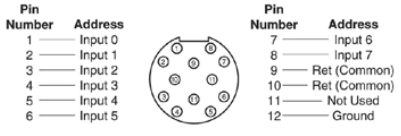

Face View - Female M23, 12-Pin Connector

Tel: +45 63 12 83 00 | Email: ps@hymatik.com | www.hymatik.com | Hvidkaervej 27a, DK-5250 Odense SV, Denmark









H Series Micro

Plug-in valve island

*Parker's newest and most innovative valve design offers functionality for **every** machine configuration.*

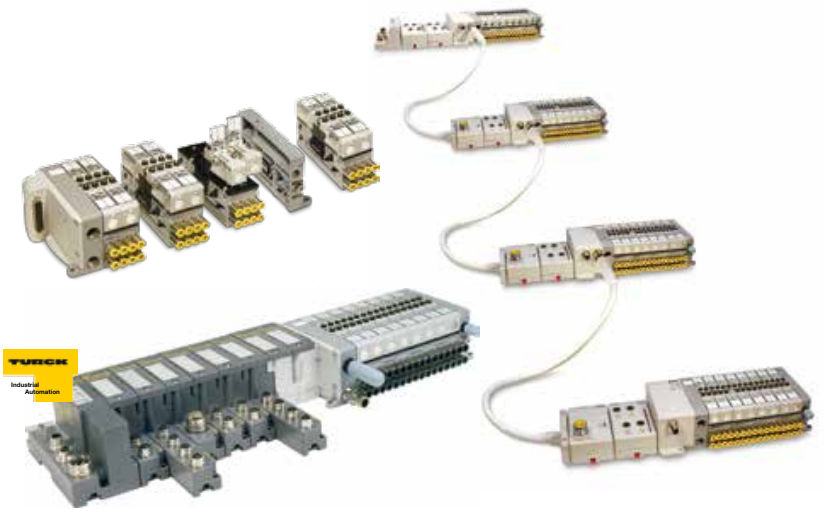

The H Series Micro valve redefines flexibility for pneumatic users. When either configured from basic components or ordered as pre-assembled and tested valve islands, H Series Micro valves are the answer to all your needs.

Flexible in use

The H Series Micro range is fully dedicated to centralized applications where a high quantity of valves have to be concentrated in a single location.

Solenoid valve island can also be implemented with digital or analogical electrical I/O.

From a centralized application high complexity level to a basic configuration, with H Series Industrial Communication or traditional multi-connection, an H Series Micro valve island can be designed.

Tel: +45 63 12 83 00 | Email: ps@hymatik.com | www.hymatik.com | Hvidkaervej 27a, DK-5250 Odense SV, Denmark

One communication module for 256 Inputs and 256 Outputs

The combination of 32 output drivers and electrical I/O modules linked to the main communication module allows H Series Micro valve islands to drive up to 512 I/O, including up to 128 solenoids splited between 4 interconnected devices.

Both electrical inputs and outputs modules can also be assembled either on the main or extended islands.

Expansion power supply may be used to provide additional Pointbus backplane current.

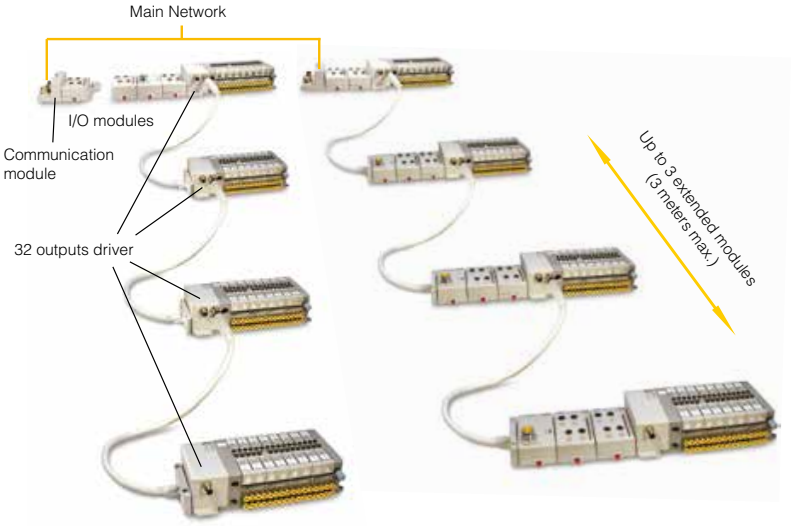

Up to 128 solenoid valves configuration

If a high quantity of valves is required in a centralized application, up to 3 extended islands can be connected to the main device communication module.

All extended islands are connected through a bus extension cable PSSVEXT1 (including 1 m cable and head plate).

In this configuration, the 32 outputs driver module, on the main island and the extended island, have to be equiped with a "bus extention" M12 connector, excepted for the last extended island.

All 32 outputs driver modules need to be equiped with a M12 solenoids power supply connector.

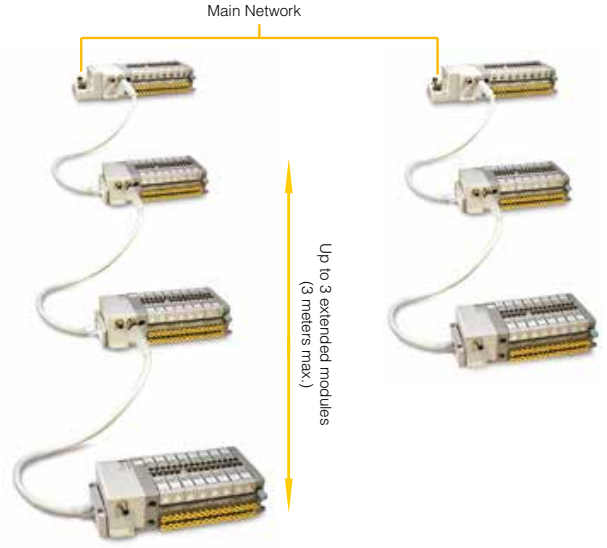

Tel: +45 63 12 83 00 | Email: ps@hymatik.com | www.hymatik.com | Hvidkaervej 27a, DK-5250 Odense SV, Denmark

Up to 256 electrical outputs including 32 solenoid valves

Communication modules include a main 24 VDC power supply for the Bus and up to 10 digital or analogical output modules. Additional power supply is only requested if there are more than 11 output modules.

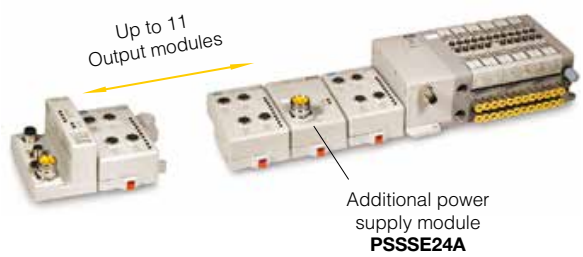

Up to 32 solenoid valves

Communication modules include a main 24 VDC power supply for the bus and the 32 output driver modules. All solenoids can be energized at the same time.



Island up to 16 or 32 solenoid valves linked to the Turck BL67 remote I/O device series

This electro-mechanical interface allows, with its modularity up to 16 or 32 solenoid valves, an inter-connection to the TURCK BL67 Series, offering a wide choice of H Series Industrial Communication with Field bus and Industrial Ethernet protocols and a complete range of electrical I/O modules.



Island for fieldbus communication in decentralized application

In a decentralized application where a serial communication is required and only a few valves are necessary, different fieldbus protocol modules are also available.

In that case, the valve island has to be equiped with a bus communication head module adaptor.

Depending on the protocol, the head module can pilot up to 16 solenoid valves.



Island with multi-pole connection

In a decentralized application, when a multi-pole connection is required, the valve island head module can be equiped with a standard Sub-D25 connector.

With this Sub-D25 connection, up to 24 solenoid valves can be piloted.



Flow Characteristics

Dual 3/2

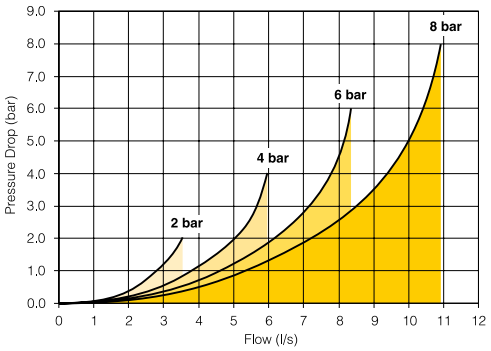

Operating pressure :	2,7 to 8,3 bar
Change-over time (side 14)	Actua. 15 ms Return 20 ms P = 6b
Change-over time (side 12)	15 ms / 25 ms P = 6b
Flow (acc. to ISO 6358) :	c = 1,2 Nl/s x bar b = 0,13 Qn = 4,6 Nl/s Qmax = 8,4 Nl/s

5/2 single and double solenoid

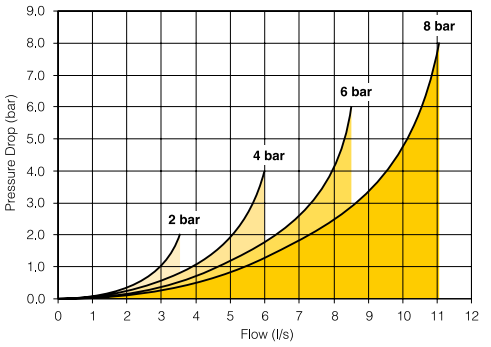

Operating pressure single solenoid:	2,7 to 8,3 bar
Operating pressure double solenoid:	1,7 to 8,3 bar
Change-over time single solenoid:	Actua. 15 ms Return 25 ms P = 6b
Change-over time double solenoid:	13 ms / 13 ms P = 6b
Flow (acc. to ISO 6358) :	c = 1,2 Nl/s x bar b = 0,13 Qn = 4,7 Nl/s Qmax = 8,5 Nl/s

5/3 all ports blocked

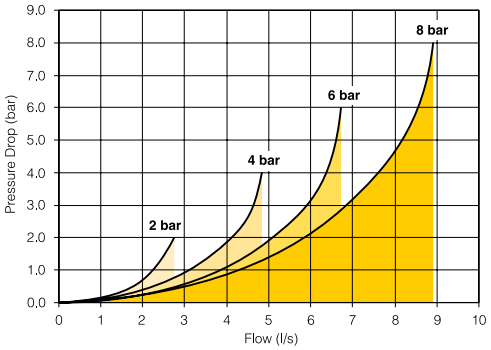

Operating pressure :	2,7 to 8,3 bar
Change-over time	Actua. 20 ms Return 20 ms P = 6b
Flow (acc. to ISO 6358) :	c = 1 Nl/s x bar b = 0,14 Qn = 3,8 Nl/s Qmax = 6,7 Nl/s

Characteristics

Fluid :	Air or inert gas Filtered 40 µ Class 5 (according to ISO 8573-1) Dry class 4 (according to ISO 8573-1) Non-lubricated or lubricated
Storage temperature :	-40 °C to + 70 °C
Working temperature	-15 °C to + 50°C
Vibration :	according to IEC 68-2-6 2G to 150 Hz
Shock :	according to IEC 68-2-27 15G 11 ms

Operating pressure :	-0.9 to 8,3 bar with external pressure 6 bar
Piloting pressure :	2.7 to 8.3 bar
Exhaust collection :	Independant exhaust collection
Rated coil voltage :	24 VDC -15 % / +10 %
Electrical connection:	Not polarised
Coil insulation :	Class B
Power consumption :	1 W (42 mA) with LED
Duty factor :	100 % at 20°C

Tel: +45 63 12 83 00 | Email: ps@hymatik.com | www.hymatik.com | Hvidkaervej 27a, DK-5250 Odense SV, Denmark

Solenoid operated valve fitted with 24 VDC solenoid

	Symbol	Description	Weight (g)	Order code
		Double 3/2 NC + NC	60	**HMNVX2049A**
		Double 3/2 NO + NO	60	**HMPVX2049A**
		Double 3/2 NC + NO	60	**HMQVX2049A**
		5/2 single solenoid - Spring return	49	**HMEVX2049A**
		5/2 double solenoid	60	**HM2VX2049A**
		5/3 all ports blocked (APB)	65	**HM5VX2049A**
		Blanking module kit (including two M7 plugs for manifold)	30	**HMBVX00XXA**
		Additional pressure module	30	**HMCVX00XXA**

Metal manifold for 4 valves (M7 threaded)

	Description	Weight (g)	Order code
Side ported 	4 position manifold single electrical address	332	**PSM21JAP**
	4 position manifold double electrical address	332	**PSM21MAP**
Bottom ported 	4 position manifold single electrical address	310	**PSM22JAP**
	4 position manifold double electrical address	310	**PSM22MAP**

Complete manifold without fitting (M7 threaded)

	Symbol	Description	Weight (g)	Order code
Side ported 		4 x Double 3/2 NC + NC	572	**PSM31MAPN0N0N0N0**
		4 x 5/2 single solenoid - Spring return	528	**PSM31JAPE0E0E0E0**
		4 x 5/2 double solenoid	572	**PSM31MAP20202020**
		4 x 5/3 all ports blocked (APB)	592	**PSM31MAP50505050**
Bottom ported 		4 x Double 3/2 NC + NC	550	**PSM32MAPN0N0N0N0**
		4 x 5/2 single solenoid - Spring return	506	**PSM32JAPE0E0E0E0**
		4 x 5/2 double solenoid	550	**PSM32MAP20202020**
		4 x 5/3 all ports blocked (APB)	570	**PSM32MAP50505050**

Tel: +45 63 12 83 00 | Email: ps@hymatik.com | www.hymatik.com | Hvidkaervej 27a, DK-5250 Odense SV, Denmark

Pneumatic accessories

	Description	Size	Tube OD	Material	Order code
	Straight pneumatic connector for sub-base and **Px**	M7	4 mm	Metal	**F28PMB4M7MD**
		M7	6 mm	Metal	**F28PMB6M7MD**
	Straight pneumatic connector for **Ex**	1/8"	6 mm	Metal	**F4PMB6-1/8**
	Straight pneumatic connector for Pressure and Exhaust ports	3/8"	8 mm	Metal	**F4PB8-3/8**
		3/8"	10 mm	Metal	**F4PB10-3/8**
		3/8"	12 mm	Metal	**F4PB12-3/8**
	Muffler for **Ex**	1/8"		Metal	**ESB12MC**
		1/8"		Plastic	**P6M-PAB1**
	Muffler for exhaust port	3/8"		Metal	**ESB37MC**

Multi-pressure inter-manifold seal plate

	Description	Pressure port	Exhaust port	Weight (g)	Order code
	Inter-manifold seal plate	Passing / Passing	Passing	16	**PSM0001**
		Passing / Block	Passing	20	**PSM0002**
		Passing / Block	Block	30	**PSM0003**
		Block / Block	Block	40	**PSM0004**

Spare parts

	Description	Weight (g)	Order code
	24 VDC Pilot solenoid with screws	11	**PSM0010**
	Set of 10 multifunction manual override caps	15	**PSM0011**
	Set of 5 valve manifold gaskets and 10 screws	25	**PSM0012**
	Set of 10 M7 plugs for auxiliary pressure selection	30	**PSM0013**
	Set of 10 labels (in the P/N, **x** has to be replaced with the valve function letter)	5	**PSM002x**
	Set of 10 manifold to manifold M3 screws	20	**PSM0014**

Tel: +45 63 12 83 00 | Email: ps@hymatik.com | www.hymatik.com | Hvidkaervej 27a, DK-5250 Odense SV, Denmark

32 output driver end modules ordering chart

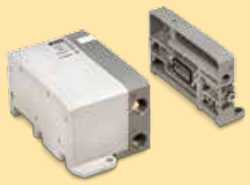

P S M L 6 1 A P

32 Output driver end modules		
	24 VDC power supply connector	Extender bus connector
L6	NO	NO
M5	NO	YES
M6	YES	NO
M7	YES	YES

	Ported design	Thread type
1	Side ported	3/8" BSPP
2	Bottom ported	3/8" BSPP
5	Side ported	3/8" NPT
6	Bottom ported	3/8" NPT

32 outputs driver selection guide :

L6 type

- 32 outputs driver with internal solenoids power supply from the communication head module
- Extended valve island not possible



Up to 32 solenoid valves per island

M6 type

- 32 outputs driver with external solenoids power supply by M12 male connector
- Extended valve island not possible



Up to 32 solenoid valves per island

M7 type

- 32 outputs driver with external solenoids power supply by separated M12 male connector
- Extended Bus link connection for additional valve islands by separate M12 female connector



Up to 32 solenoid valves per island

M5 type

- 32 outputs driver with internal solenoids power supply from the communication head module
- Extended Bus link connection for additional valve islands by separate M12 female connector



Up to 32 solenoid valves per island

Bus extender

Bus extender communication 1 meter cable for instant valve island plug-in by M12 male connector and direct head connection plate on device

Every extended island has to be separately power supplied



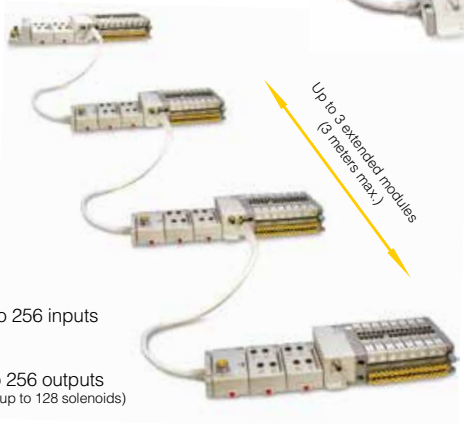

Technical data

32 Outputs driver modules

Number of Outputs :	32
Operating Voltage Range :	20,4 to 26.4 VDC
Output current rating Nom. :	50 mA per chanel (100 mA Max)
	3.2A per module
Pointbus current :	200 mA
Working temperature :	-15°C to 50°C
Dust and water protection :	IP65

Tel: +45 63 12 83 00 | Email: ps@hymatik.com | www.hymatik.com | Hvidkaervej 27a, DK-5250 Odense SV, Denmark

32 outputs driver modules

	Sub-base design	Thread type	24 VDC power supply	Extender bus	Weight (g)	Order code
	Side ported	3/8" BSPP	NO	NO	400	**PSML61AP**
	Bottom ported	3/8" BSPP	NO	NO	400	**PSML62AP**
	Side ported	3/8" BSPP	YES	NO	400	**PSMM61AP**
	Bottom ported	3/8" BSPP	YES	NO	400	**PSMM62AP**
	Side ported	3/8" BSPP	NO	YES	400	**PSMM51AP**
	Bottom ported	3/8" BSPP	NO	YES	400	**PSMM52AP**
	Side ported	3/8" BSPP	YES	YES	400	**PSMM71AP**
	Bottom ported	3/8" BSPP	YES	YES	400	**PSMM72AP**

Bus extender

	Description	Weight (g)	Order code
	Head plate 1 meter cable / M12 male connector for extended island inter-connection	380	**PSSVEXT1**

Tel: +45 63 12 83 00 | Email: ps@hymatik.com | www.hymatik.com | Hvidkaervej 27a, DK-5250 Odense SV, Denmark

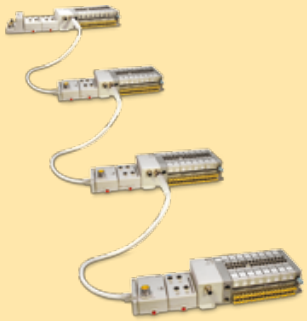

Communication modules :
- Fieldbus
- Industrial Ethernet

Digital and Analogical I/O modules
Extended power supply module
IP67 modules

H Series Industrial Communication and I/O modules

H Series Industrial Communication modules

H Series Industrial Communication modules are available in :

- DeviceNet
- Profibus DP
- Ethernet I/P
- ControlNet



Digital or Analogical electrical I/O modules



Some modules have diagnostic features, electronic fusing, or individually isolated inputs/ outputs. The H Series Industrial Communication family provides a wide range of input and output modules to span many applications, from highspeed discrete to process control. H Series Industrial Communication supports producer/consumer technology, which allows input information and output status to be shared among multiple Logix controllers.

Extension Power Unit

The auxiliary power supports up to 10 I/O modules and 32 output driver with a maximum of 10 A field power.
The 24 VDC extension power unit (PSSSE24A) extends the backplane bus power to support up to 10 more I/O modules. Connect additional extension power units to expand the I/O assembly up to 63 I/O modules

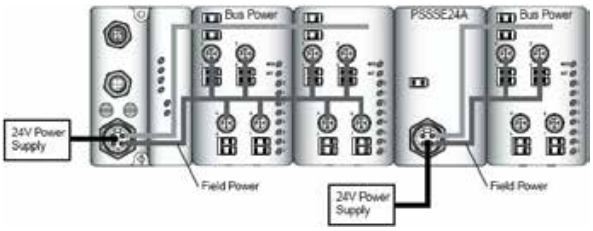

Technical data

Industrial Communication modules & Extension power unit

Bus power supply :	24 VDC at 400 mA
Power supply input voltage :	24 VDC
Operative voltage range :	10 to 28.8 VDC
Input overvoltage protection :	Reverse polarity protected

Analogue Input modules

Number of Outputs :	2
Input signal Range :	4 to 20 mA / 0 to 10 VDC
Pointbus current :	75 mA

Analogue Output modules

Number of Outputs :	2
Input signal Range :	4 to 20 mA / 0 to 10 VDC
Pointbus current :	75 mA

Digital Input modules

Number of Outputs :	8 – PNP or NPN
Operating Voltage Range :	10 to 28.8 VDC
Input current on-state :	2 to 5 mA
Input current off-state :	1,5 mA
Pointbus current :	75 mA

Digital Ouput modules

Number of Outputs :	8
Operating Voltage Range :	10 to 28.8 VDC
Output current rating Max. :	1 A per channel 3 A per module
Pointbus current :	75 mA

Relay Output modules

Number of Outputs :	4 – NO contacts
Operating Voltage Range :	5 to 28.8 VDC
Output current rating Max. :	2 A per channel 8 A per module
Pointbus current :	90 mA

H Series Industrial Communication modules

	Description	Fieldbus connection	Power supply connector	Weight (g)	Order code
 PSSCENA PSSCCNA	DeviceNet	M18	7/8" - 4 pins	400	**PSSCDM18PA**
		M12 - A coding	7/8" - 4 pins	400	**PSSCDM12A**
	Profibus DP	M12 - B coding	7/8" - 5 pins	380	**PSSCPBA**
	Ethernet I/P	M12 - D coding	7/8" - 4 pins	380	**PSSCENA**
	ControlNet	M12 - D coding	7/8" - 4 pins	380	**PSSCCNA**

Electrical I/O modules

	Description	Polarity	Connector type	Weight (g)	Order code
 PSSN8M8A	8 Digital Inputs	PNP	8 x M8	400	**PSSN8M8A**
			4 x M12	380	**PSSN8M12A**
		NPN	4 x M12	380	**PSSP8M12A**
 PSST8M12A	8 Digital Ouputs	PNP	8 x M8	400	**PSST8M8A**
			4 x M12	380	**PSST8M12A**
 PSST8M23A			1 x M23	400	**PSST8M23A**
	4 Digital Ouputs	Relay	4 x M12	410	**PSSTR4M12A**
 PSSNACM12A	2 Analogue Inputs	0 - 10 V	2 x M12	400	**PSSNAVM12A**
		4 - 20 mA	2 x M12	400	**PSSNACM12A**
	2 Analogue Outputs	0 - 10 V	2x M12	400	**PSSTAVM12A**
 PSSTACM12A		4 - 20 mA	2 x M12	400	**PSSTACM12A**

Auxiliary electrical modules

	Description	Connector type	Weight (g)	Order code
 PSSSE24A	24 VDC expansion power unit	7/8" - 4 pins	420	**PSSSE24A**

Bus extender

	Description	Length	Weight (g)	Order code
 PSSVEXT1	Bus extender cable for module interconnection	1 meter	380	**PSSVEXT1**
		3 meters	760	**PSSVEXT3**
 PSSTERM	Termination module		200	**PSSTERM**

Accessories

	Description	Bus protocol	Connector type	Weight (g)	Order code
P8CS0803J 	Power supply connector	DeviceNet, ControlNet & Ethernet	7/8" - 4 pins	40	**P8CS7804AA**
		Profibus DP	7/8" - 5 pins	40	**P8CS7805AA**
	Line termination	DeviceNet	M12 - A coding	25	**P8BPA00MA**
		Profibus DP	M12 - B coding	25	**P8BPA00MB**
	Bus IN female connector	DeviceNet	M12 - A coding	25	**P8CS1205AA**
		Profibus DP	M12 - B coding	25	**P8CS1205AB**
	Bus OUT male connector	DeviceNet	M12 - A coding	25	**P8CS1205BA**
P8CSY1212A 		Profibus DP	M12 - B coding	25	**P8CS1205BB**
	Cable quick connect connector		M8	25	**P8CS0803J**
			M12 - A coding	25	**P8CS1204J**
	"Y" shape, thread to thread		M12 - 2 x M12	25	**P8CSY1212A**

Tel: +45 63 12 83 00 | Email: ps@hymatik.com | www.hymatik.com | Hvidkaervej 27a, DK-5250 Odense SV, Denmark

16 Outputs Moduflex Bus ends module adaptator

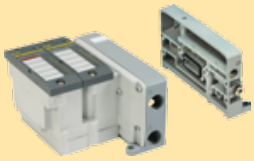

P S M T 2 1 A P

TURCK BL67 Series adaptor	
T0	Valve Driver Module without output module
T1	Valve Driver Module for 16 Outputs
T2	Valve Driver Module for 32 Outputs

For T0 version, 16 output module and blank module can be ordered separately from the next page or directly from TURCK under the same part number.

	Ported design	Thread type
1	Side ported	3/8" BSPP
2	Bottom ported	3/8" BSPP
5	Side ported	3/8" NPT
6	Bottom ported	3/8" NPT

Valve driver Module for 16 or 32 Outputs

Modularity up to 16 or 32 Outputs :

- Populated with 1 or 2 standard TURCK 16 Output modules BL67-16DO-0. 1A-P, the Valve Driver Module can handle up to 16 or 32 solenoid valves.
- For a 16 Outputs configuration, the second slot has to be populated with 1 standard TURCK blank module BL67-E.



TURCK BL67 communication gateway

H Series Industrial Communication :

- Linked to a TURCK BL67 communication module (programmable or not programmable), the device can be connected to a wide choice of Field Bus or Industrial Ethernet protocols.

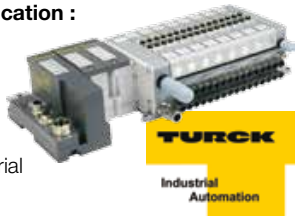

PROFIBUS DeviceNet CANopen
PROFINET EtherNet/IP MODBUS TCP

TURCK BL67 I/O and Base modules

The 2 piece design allows to complete the device with a choice through a full digital or analogue **I/O modules** range populating the **base module** existing with a multiple choice of electrical connection (M8, M12, M23, 7/8")
The complete resulting configuration can handle :

- Up to 32 electrical modules (up to 2 in the Valve Driver Module)
- Up to 256 digital I/O (up to 32 outputs in the Valve Driver Module)
- Up to 64 analog I/O



Full description or TURCK BL67 Series on http://www.turck.com

Tel: +45 63 12 83 00 | Email: ps@hymatik.com | www.hymatik.com | Hvidkaervej 27a, DK-5250 Odense SV, Denmark

Valve Driver Module - TURCK BL67 adaptor

	Description	Solenoid Valves	Sub-base design	Thread type	Weight (g)	Order code
	Valve Driver Module	0	Side ported	3/8" BSPP	200	**PSMT01AP**
		Without 16 O module	Bottom ported	3/8" BSPP	200	**PSMT02AP**
		16 Outputs or blank module to be ordered separately (see below)				
		16 Including : - 1 x 16 O module - 1 blank module	Side ported	3/8" BSPP	270	**PSMT11AP**
			Bottom ported	3/8" BSPP	270	**PSMT12AP**
		32 Including : - 2 x 16 O modules	Side ported	3/8" BSPP	310	**PSMT21AP**
			Bottom ported	3/8" BSPP	310	**PSMT22AP**

Standard TURCK BL67 module

	Description	Weight (g)	Order code
	16 Outputs module for 16 or 32 solenoid valves configuration	55	**BL67-16DO-0.1A-P**
	Blank module for 16 solenoid valves configuration	15	**BL67-E**

Both standard TURCK BL67 Outputs module and Blank module can be ordered directly from TURCK under the same part number.

16 Outputs module BL67-16DO-0.1A-P technical specifications

Number of channels	16
Nominal voltage V_O	24 VDC
Rated current from field supply	≤ 100 mA
Rated current from module bus	≤ 30 mA
Power loss, typical	≤ 1.5 W
Output type	PNP
Output voltage	24 VDC
Output current per channel	140 mA rated current (with VN 01-05 or higher)
Output delay	3 ms
Load type	resistive, inductive
Short-circuit protection	yes
Simultaneity factor	1
Electrical isolation	electronics for the field level

Dimensions (W x L x H)	32 x 91 x 59 mm
Approvals	CE, cULus
Operating temperature	Refer to solenoid valve
Storage temperature	-40°C to +70°C
Vibration	According to IEC68-2-6 : 2g to 150 Hz
Shock test	According to IEC68-2-27 : 15g to 11 ms
Electro-magnetic compatibility	acc. to EN61131-2
Protection class	IP 65
Tightening torque fixing screws	0.9 ... 1.2 Nm

Tel: +45 63 12 83 00 | Email: ps@hymatik.com | www.hymatik.com | Hvidkaervej 27a, DK-5250 Odense SV, Denmark

16 Outputs Moduflex Bus ends module adaptator



P S M M C 1 A P

Moduflex 16 Outputs adaptator	
M4	Adaptor without bus module
MC	Adaptor with CANopen module
MD	Adaptor with DeviceNet module
MP	Adaptor with Profibus DP module

For AS-i communication, use M4 and see Moduflex Valve catalogue for AS-i module part number.

	Ported design	Thread type
1	Side ported	3/8" BSPP
2	Bottom ported	3/8" BSPP
5	Side ported	3/8" NPT
6	Bottom ported	3/8" NPT

Moduflex Bus 16 Outputs

16 solenoids fieldbus modules available in DeviceNet, CANopen, and Profibus DP protocols.



Closer to the cylinder

Decentralized application when solenoid valves have to be closer to the pneumatic actuators.

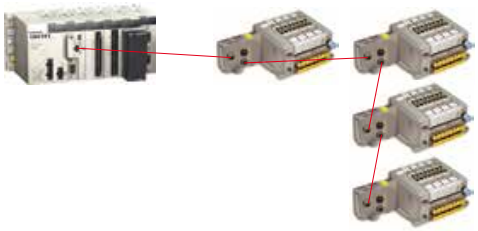

Technical data

Moduflex Bus communication modules

Bus power supply : 20 to 30 VDC
Power supply output voltage : 24 VDC
Module consumption :
- DeviceNet : 1,5 W
- CANopen : 1,5 W
- Profibus DP : 1,5 W

Water and dust Protection : IP65
Output protection : overload protected

Moduflex Bus modules



Description	Bus protocol	Sub-base design	Thread type	Weight (g)	Order code
Moduflex Bus module	CANopen	Side ported	3/8" BSPP	250	**PSMMC1AP**
		Bottom ported	3/8" BSPP	250	**PSMMC2AP**
	DeviceNet	Side ported	3/8" BSPP	250	**PSMMD1AP**
		Bottom ported	3/8" BSPP	250	**PSMMD2AP**
	Profibus DP	Side ported	3/8" BSPP	250	**PSMMP1AP**
		Bottom ported	3/8" BSPP	250	**PSMMP2AP**

Also available, AS-i interface protocol, standard version or extended version (A - B coded). See Moduflex Valve catalogue.



End modules adaptator without Moduflex Bus module	All	Side ported	3/8" BSPP	200	**PSMM41AP**
		Bottom ported	3/8" BSPP	200	**PSMM42AP**

For configuration files, go to : http://www.parker.com/pneu/moduflex.

Decentralized Device bus accessories



P8CS0803J

P8CSY1212A



Description	Bus protocol	Connector type	Weight (g)	Order code
Power supply female straight connector	All	M12 - A coding	25	**P8CS1205AA**
Line termination	DeviceNet CANopen	M12 - A coding	25	**P8BPA00MA**
	Profibus DP	M12 - B coding	25	**P8BPA00MB**
Bus IN female connector	DeviceNet CANopen	M12 - A coding	25	**P8CS1205AA**
	Profibus DP	M12 - B coding	25	**P8CS1205AB**
Bus OUT male connector	DeviceNet CANopen	M12 - A coding	25	**P8CS1205BA**
	Profibus DP	M12 - B coding	25	**P8CS1205BB**
Cable quick connect connector		M8	25	**P8CS0803J**
		M12 - A coding	25	**P8CS1204J**
"Y" shape, thread to thread		M12 - 2 x M12 - A coding	25	**P8CSY1212A**

Tel: +45 63 12 83 00 | Email: ps@hymatik.com | www.hymatik.com | Hvidkaervej 27a, DK-5250 Odense SV, Denmark

Multi-connection head module

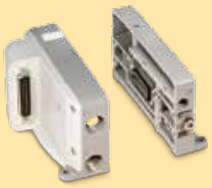

P S M L 2 1 A P

Multi-wire connection	
L2	Sub-D25 connector

	Ported design	Thread type
1	Side ported	3/8" BSPP
2	Bottom ported	3/8" BSPP
5	Side ported	3/8" NPT
6	Bottom ported	3/8" NPT

Sub-D25 connection

Up to 24 solenoids on standard Sub-D25 connector.



Technical data



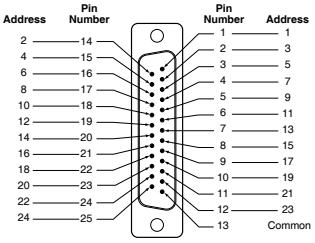



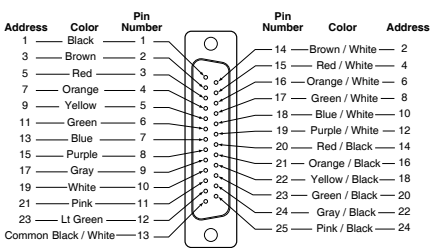

Rated voltage :	24 VDC
Maximum addresses :	24
Maximum energised simultaneously :	24
Electrical connection :	Sub-D25 pin DIN 41652, MIL-C-24308, NFC93425 type HE5
Polarity :	PNP and NPN compatible (solenoids not polarized)
Dust and water protection :	IP65 rated with properly assembled IP65 rated cable

Electrical multi-pole end modules

	Description	Sub-base design	Thread type	Weight (g)	Order code
	Sub-D25 ends module	Side ported	3/8" BSPP	250	**PSML21AP**
		Bottom ported	3/8" BSPP	250	**PSML22AP**

Electrical accessories

	Description	Cable length	Weight (g)	Order code
 **P8LMH25M3A**	Sub-D25 connector IP40 with flying leads multi-cable	3 m	380	**P8LMH25M3A**
		9 m	780	**P8LMH25M9A**
	Sub-D25 connector IP65 with flying leads multi-cable	9 m	790	**P8LMH25B9A**

Tel: +45 63 12 83 00 | Email: ps@hymatik.com | www.hymatik.com | Hvidkaervej 27a, DK-5250 Odense SV, Denmark

H Series Micro Valve with TURCK BL67 adaptor - Side ported

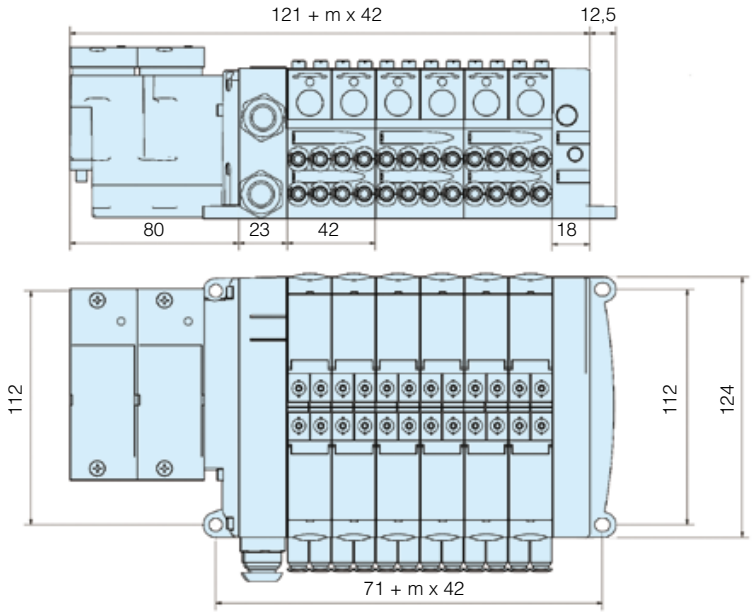

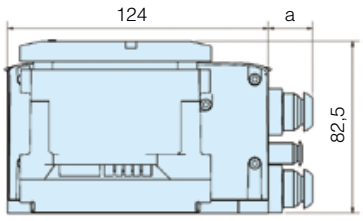

M7 fittings	a
Ø 4 mm	11
Ø 6 mm	16

H Series Micro Valve with TURCK BL67 adaptor - Bottom ported

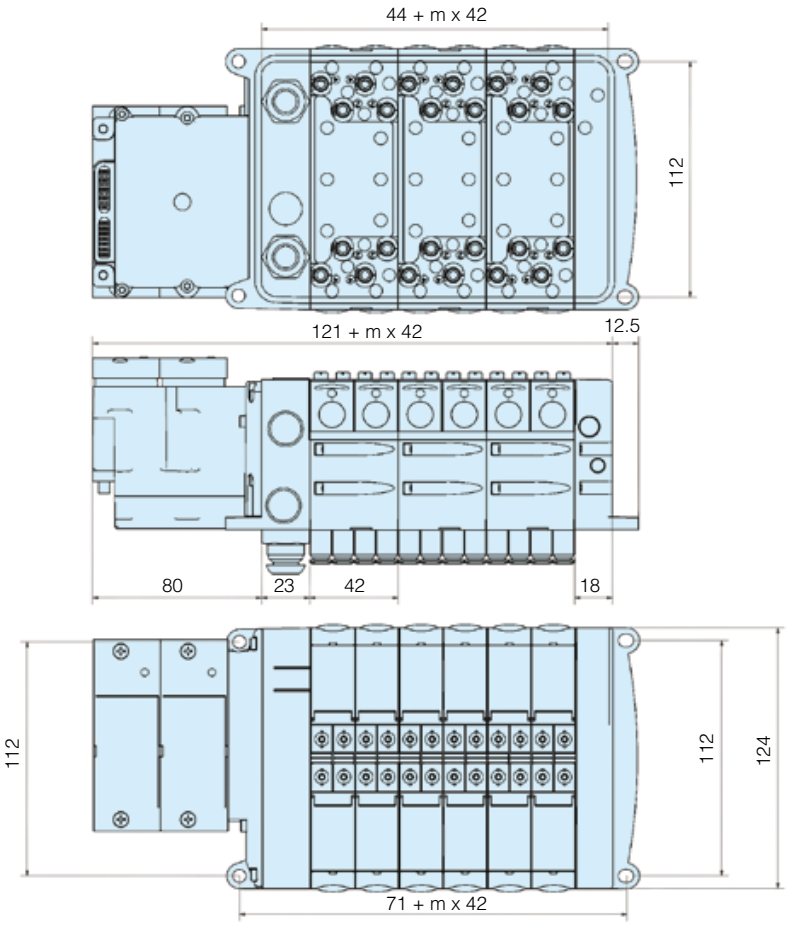

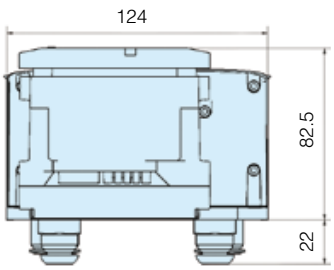

Note:
m = number of manifolds (one manifold for 4 valves modules)

Tel: +45 63 12 83 00 | Email: ps@hymatik.com | www.hymatik.com | Hvidkaervej 27a, DK-5250 Odense SV, Denmark

Fieldbus - Side ported

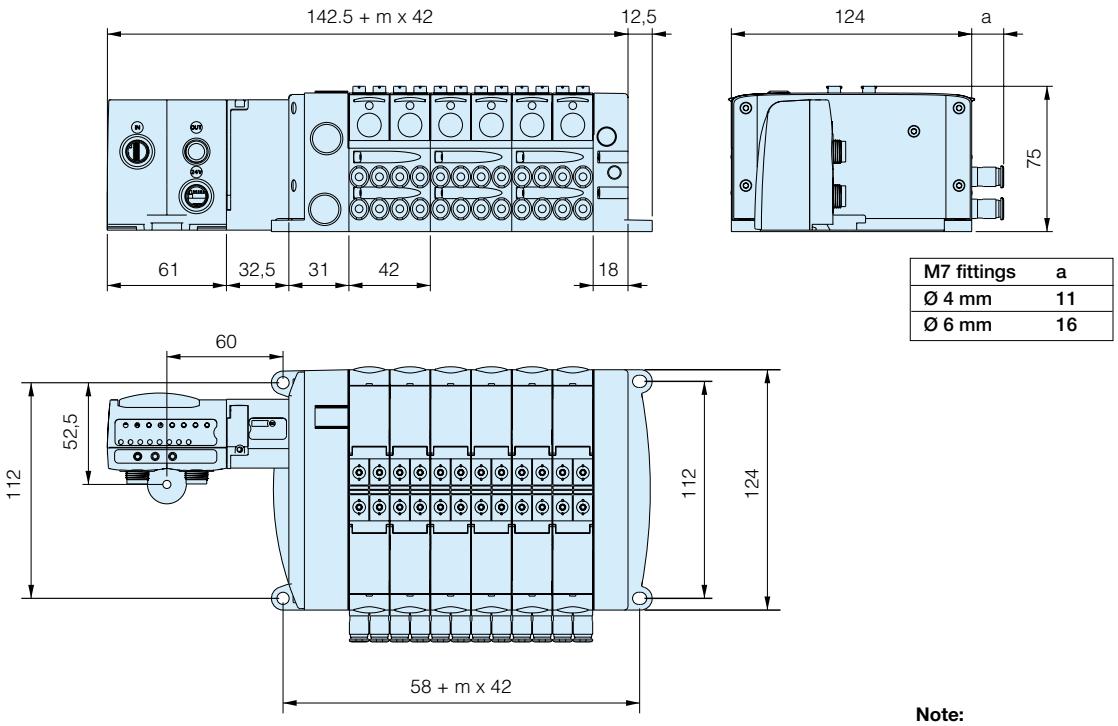

M7 fittings	a
Ø 4 mm	11
Ø 6 mm	16

Note:
m = number of manifolds (one manifold for 4 valves modules)

Fieldbus - Bottom ported

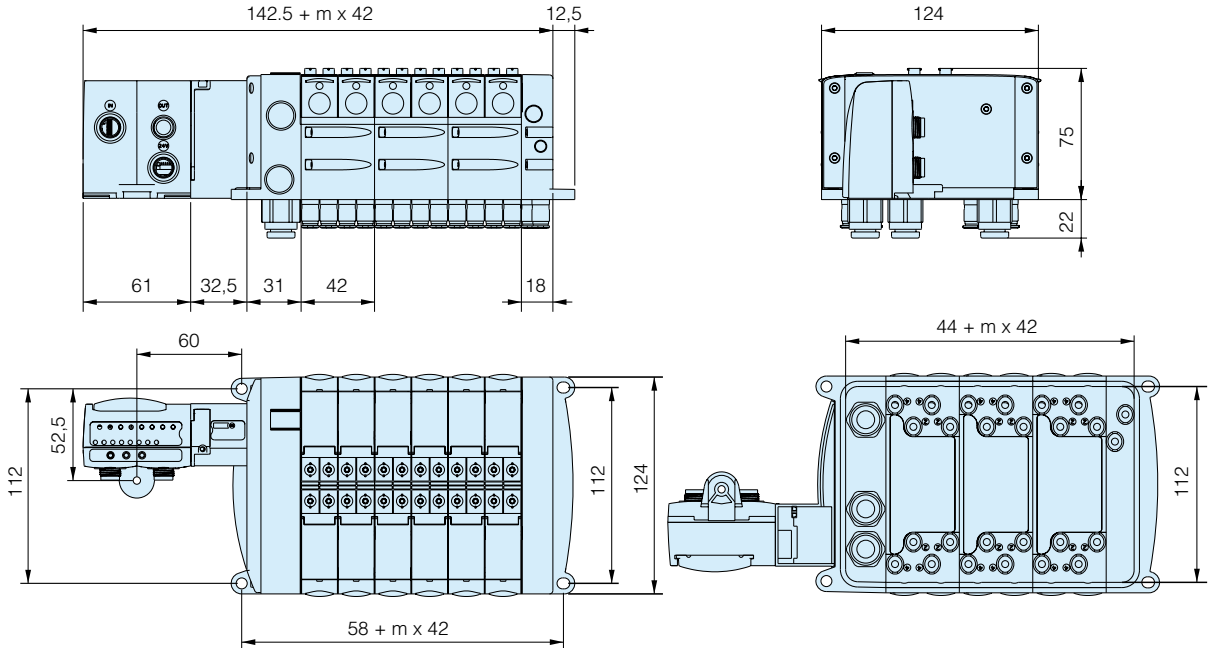

Tel: +45 63 12 83 00 | Email: ps@hymatik.com | www.hymatik.com | Hvidkaervej 27a, DK-5250 Odense SV, Denmark

SubD25 - Side ported

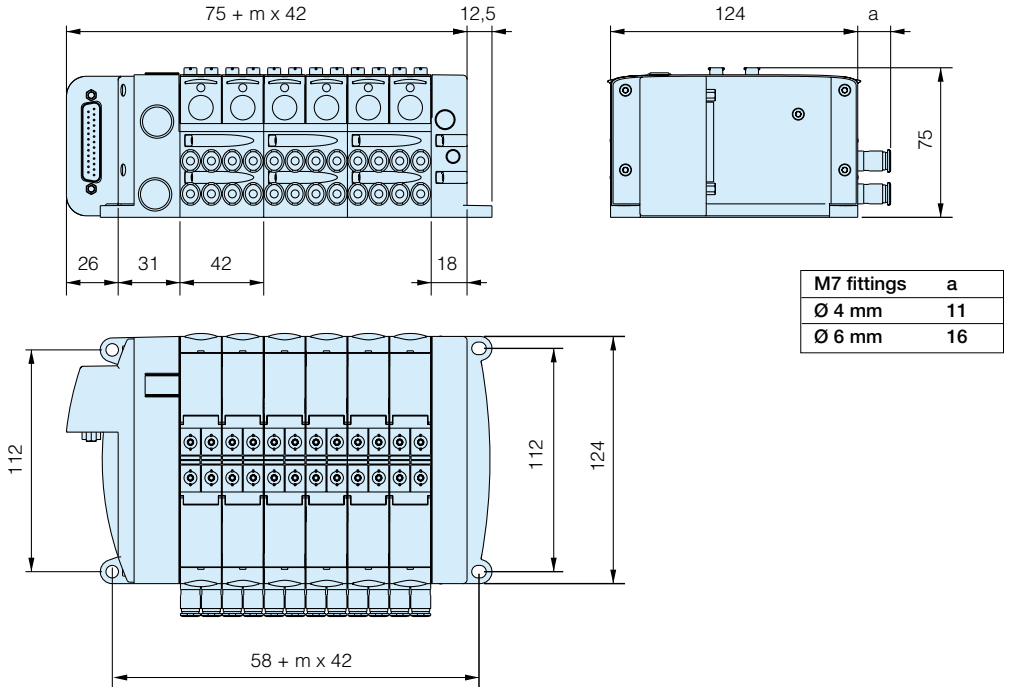

M7 fittings	a
Ø 4 mm	11
Ø 6 mm	16

Note:
m = number of manifolds (one manifold for 4 valves modules)

SubD25 - Bottom ported

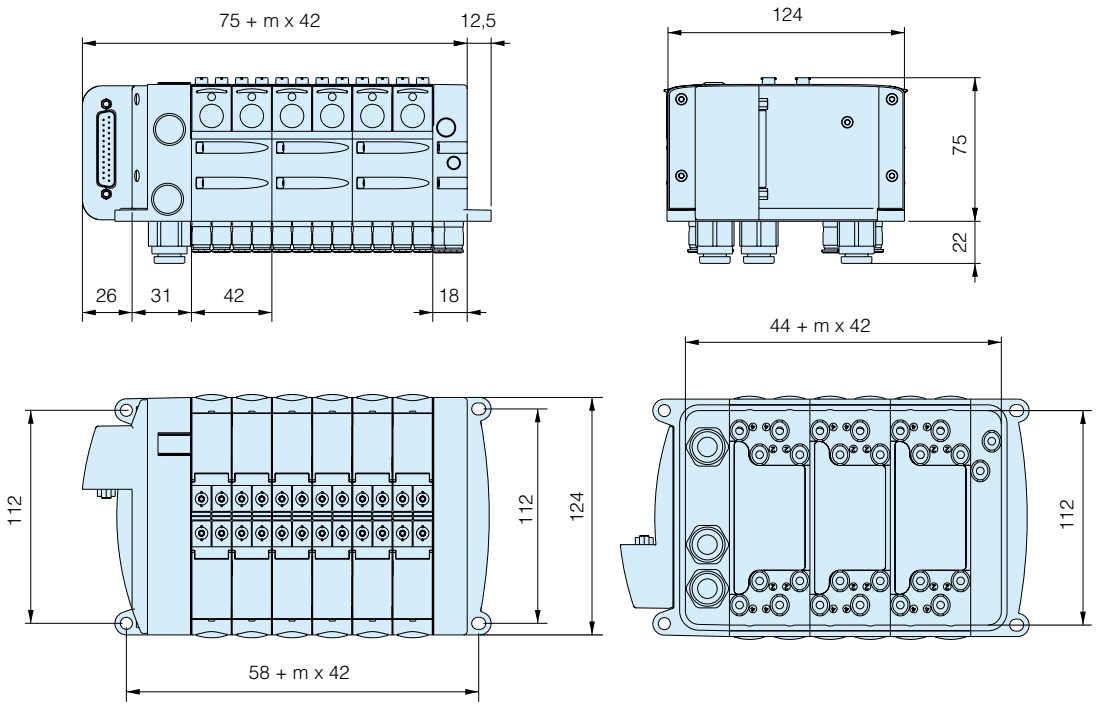









Moduflex Valve System®

Flexibility for pneumatic users

*Whether configured from basic components or ordered as a pre-assembled and tested valve island, **Moduflex flexibility** is unmatched in the market place.*

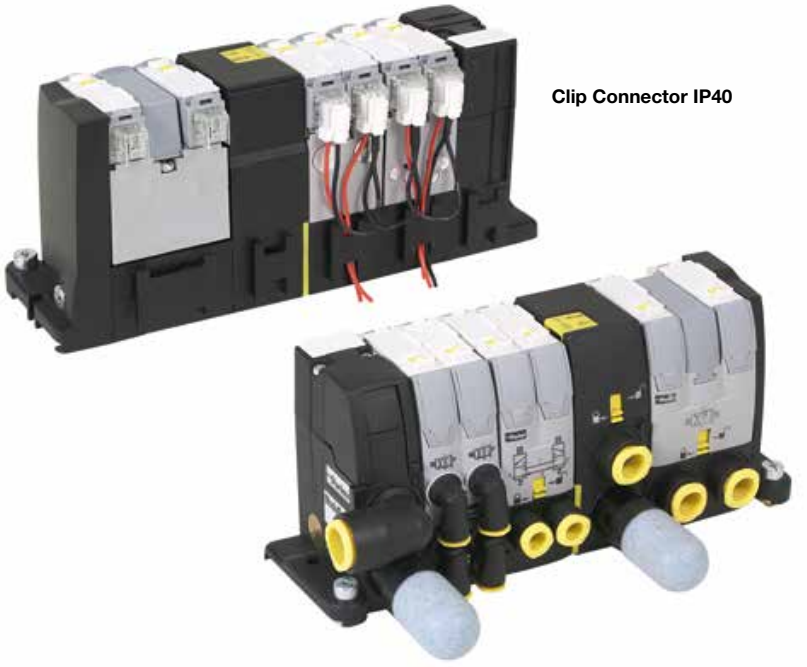

Clip Connector IP40

Innovative

The 6 patents awarded to the Moduflex Valve System reflect that innovation is core to the Parker design process. Maintaining a clear understanding of our customer's expectations has defined the individuality of the Moduflex, and clearly differentiated it as a leading automation solution.

Adaptive

No other system can be adapted so simply once specified. Unique, captive fitting release system, quick release electrical connectors and single mechanical screw connection between manifolds offer the ultimate capability for late system design changes.

Multi-Functional

From stand-alone valves to fieldbus ready valve islands, from cylinder flow controls to vacuum generators with integrated blow-off, the Moduflex Valve System meets the requirements of the whole automation spectrum.

Moduflex Valve System

The Moduflex Valve System redefines flexibility for pneumatic users. Whether configured from basic components or ordered as a pre-assembled and tested valve island, Moduflex flexibility is unmatched in the market place.



V Series



T Series



Lockable Connector IP67

New for 2015



Clip Connector IP40

S Series



Lockable Connector IP67

New for 2015



Clip Connector IP40

P Series



Innovative

The 6 patents awarded to the Moduflex Valve System reflect that innovation is core to the Parker design process. Maintaining a clear understanding of our customer's expectations has defined the individuality of the Moduflex, and clearly differentiated it as a leading automation solution.

Adaptive

No other system can be adapted so simply once specified. Unique, captive fitting release system, quick release electrical connectors and single mechanical screw connection between manifolds offer the ultimate capability for late system design changes.

Multi-Functional

From stand-alone valves to fieldbus ready valve islands, from cylinder flow controls to vacuum generators with integrated blow-off, the Moduflex Valve System meets the requirements of the whole automation spectrum.

Light-weight

An As-i compatible valve manifold with 8 electrical inputs and 8 pneumatic outputs weighs a mere 800grams, making the Moduflex Valve System the perfect choice for end of arm tooling application.

Moduflex Valve technology

Two technology platforms enable the compact design and high performance of the Moduflex Valve System.

The compact dual 4/2 and 3/2 valves utilize well proven Parker seal technology. The standard 4/2 valves adopt the long life super durable ceramic switching technology.

Dual 4/2 valve



4/2 Valve



Moduflex Complete Control

With the introduction of the dual 4/2 size 1 valves, Moduflex now offers unrivaled ability of matching valves to exact flow requirements, ensuring cost and space are minimized.
In addition, Moduflex Valve System offers all the necessary control peripherals to provide a complete automation solution. Moduflex is the complete control package.

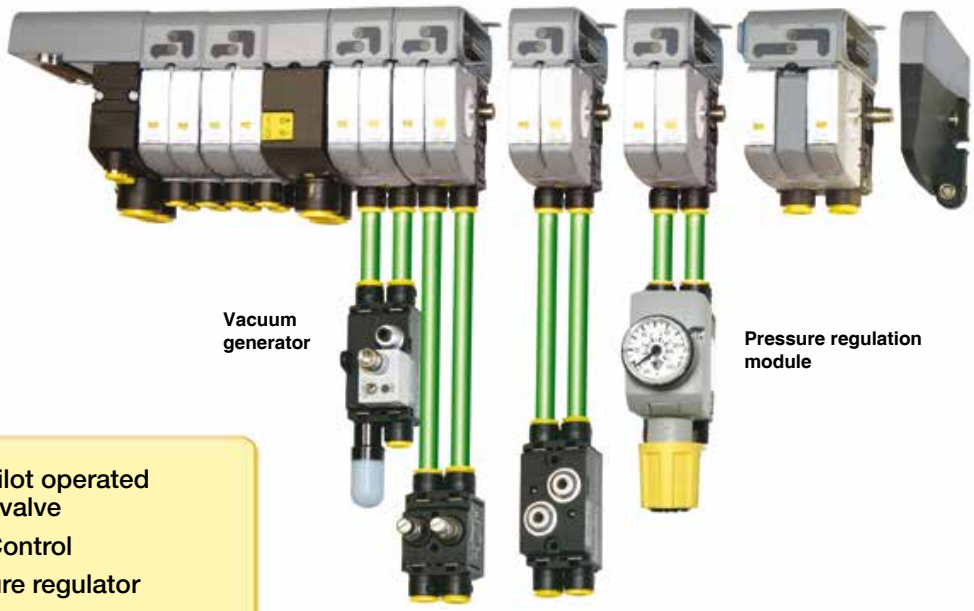

- Dual pilot operated check valve
- Flow Control
- Pressure regulator
- Vacuum / Blow off module.

With high performance technology, Moduflex opens a new era in the field of electro-pneumatic automation. Valves are easily assembled into compact islands that conform to any application requirement.

Adaptive pneumatic

With the Moduflex Valve design, pneumatic automation is now totally flexible.

- Valves may be stand-alone or assembled into short or long islands, depending on application.
- IP 65-67 water and dust protection allows valve to be installed near the cylinders for shorter response time and lower air consumption.
- The IP40 water and dust protection allows an optimized electrical connection for applications into cabinet or soft and none agressive environments.
- Valve island electrical connections may be integrated.
- Push-in pneumatic connectors may be straight or elbow, for 4, 6, 8 or 10 mm OD tubes.
- A given island may incorporate different valve sizes in order to fullfill each cylinder flow requirement. A single island will accomodate all cylinders, up to 100 mm bore size.
- Island modifications are easy : add or remove a valve, change a valve function, change tubing size, change piloting in minutes.
- Manual overrides are also adaptive : locking for set up, non-locking for production, ...



stand-alone valve

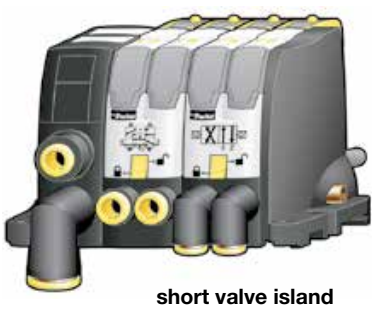

short valve island

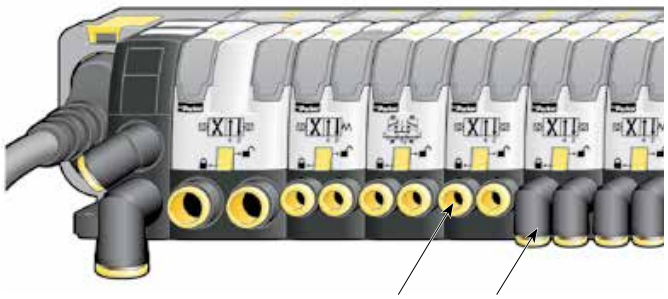

or long valve island

straight or elbow pneumatics connectors

Easy man-machine dialog

- Moduflex incorporates LED indicators, manual overrides (MAN), in conjunction with valve symbols and identification.
- As compared to traditional 5/2 valve islands, Moduflex offers a more user friendly dialog : each marking, LED and MAN are all lined up with the corresponding cylinder output.

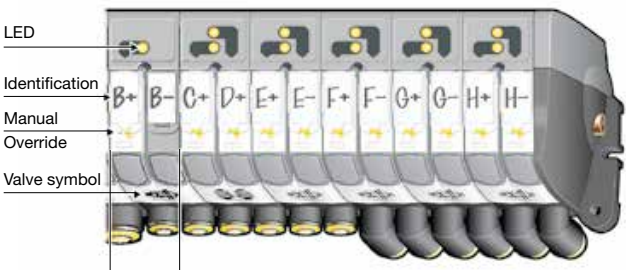

Island with traditional 5/2 spool valves : Before any action, LED and MAN have to be carefully related to the corresponding output. Man-machine dialog is difficult.

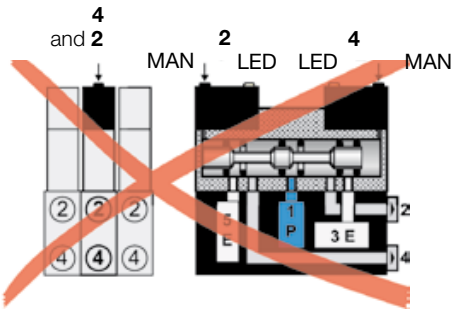

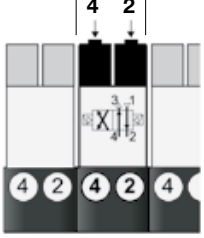

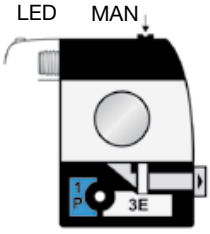

Island with Moduflex 4/2 slides valves: Each marking, LED and MAN line up with the corresponding output.

Man-machine dialog is easy.

Adaptive design

individual electrical connector
Lockable M8 Connector - IP67 **or** **Clip Connector - IP40**





or Valve Bank with integrated IP65 electrical connections

3 valves sizes in the same valve bank

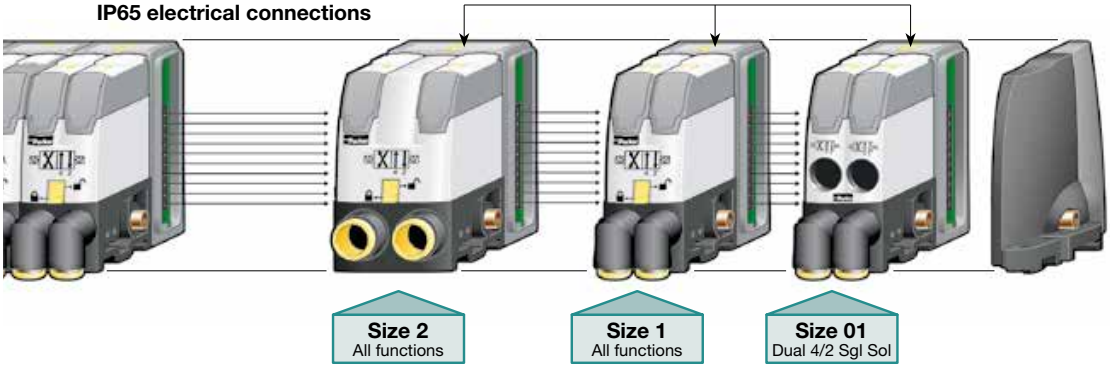

Flows and tube connections



Optimal nominal section for a full flow with appropriate fitting

3 valve sizes lead to a global choice of tube sizes, thus covering all usual applications

	Size 2 Nominal section 40 mm²	Size 1 Nominal section 12 mm²	Size 01 Nominal section 4 mm²
	Qn 800 Nl/mn* Qmax 1340 Nl/mn* *) For 3/2 functions Qn 450 Nl/mn Qmax 805 Nl/mn	Qn 310 Nl/mn* Qmax 510 Nl/mn* *) For 3/2 functions Qn 235 Nl/mn Qmax 415 Nl/mn	Qn 165 Nl/mn* Qmax 275 Nl/mn*
Tube size to cylinder	**Ø Ext. 10 mm** / Ø Ext. 8 mm	**Ø Ext. 6 mm** / Ø Ext. 4 mm	**Ø Ext. 4 mm**
Cylinder bore size	Ø 63 to Ø 100 mm / Ø 40 to Ø 63 mm	Ø 25 to Ø 40 mm / Ø 6 to Ø 25 mm	Ø 6 to Ø 25 mm

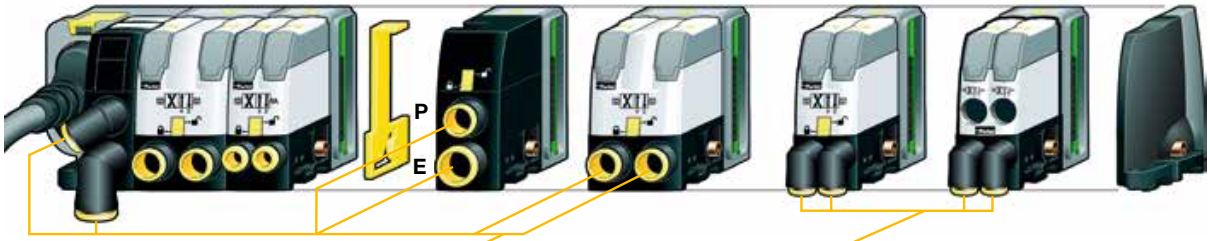

Adaptive pneumatic connection

Valve outputs are equipped with clip-on push-in tube connectors with a choice of straight or elbow in different sizes

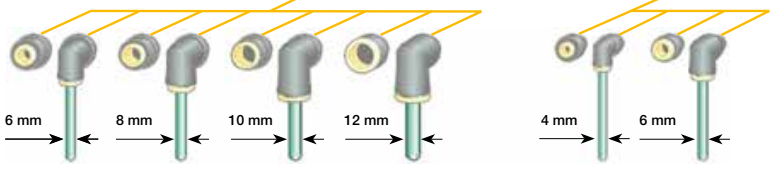

Typical cylinder speeds are shown on next pages. Module size, tube diameter and length, cylinder size, load and exhaust collection are taken into account.

Tel: +45 63 12 83 00 | Email: ps@hymatik.com | www.hymatik.com | Hvidkaervej 27a, DK-5250 Odense SV, Denmark

Operating information

Working pressure	-0,9 to 8 bar
Pilot pressure	3 to 8 bar *
Working temperature	-15 °C to 60 °C
Protection individual connectors	IP 67 NEMA4
Protection integrated connectors	IP 65
Voltage	24 V DC
* Single and double 3/2	3,5 to 8 bar

		Dual 4/2	Dual 3/2	3/2	4/2
Size 1	Qmax.	275 l/min	415 l/min	415 l/min	510 l/min
	Qn	165 l/min	235 l/min	235 l/min	310 l/min
Size 2	Qmax.	-	805 l/min	805 l/min	1340 l/min
	Qn	-	450 l/min	440 l/min	800 l/min

Total ordering flexibillity

Additionally to the complete product adaptability, the Moduflex Valve range offers for V, T, S and P series an ordering flexibility with 3 different designs; from all components separately ordered (basic module) to pre-assembled and tested valve island.

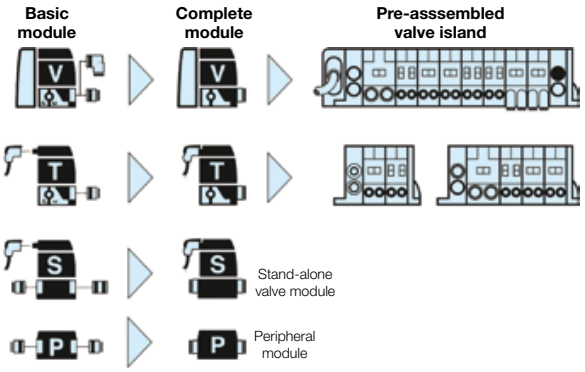

The Moduflex Valve Island in-line e-Configurator software is the easy way to, step by step, configure and order the required valve island for the application.

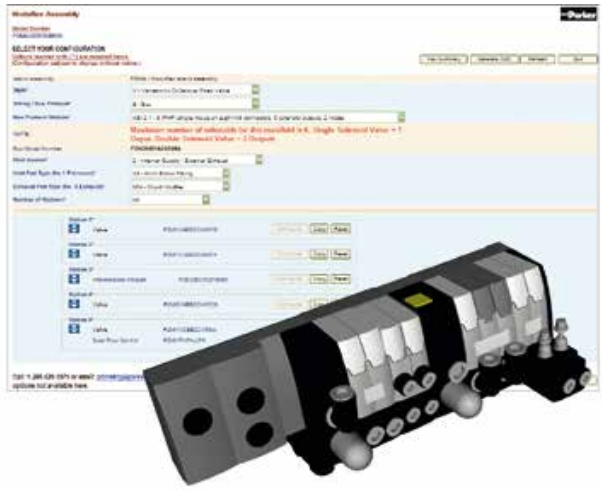

Ordering options

1 - Basic modules ordering

Using this option, all basic components are separately ordered :

- Head and Tail set
- Valve modules
- Intermediate module kit
- Peripheral modules
- Pneumatic connectors, mufflers and plugs
- Electrical connection or fieldbus module

The complete bill of material needed for the valve island assembly can be easily details using page 1 of the Moduflex Valve Configurator software report.

2 - Complete modules ordering

Using this option, modules are defined, ordered and supplied, pneumatic connectors and electrical connection equiped. One part number defines :

- Function module
- Pneumatic connectors, muffler and plugs
- Electrical connection and cable

For an entire valve island configuration, the list of complete modules can be easily details using page 3 of the Moduflex Valve Configurator software report.

3 - Pre-assembled valve islands ordering

Using this option, the complete valves island configuration has to be defined, and may be ordered, delivered fully assembly and tested under one part number.

The Moduflex Valve in-line e-Configurator software is an easy way for a clear definition of the requested valve island configuration.

Parker Hannifin Corporation
Pneumatic Division - Europe

Tel: +45 63 12 83 00 | Email: ps@hymatik.com | www.hymatik.com | Hvidkaervej 27a, DK-5250 Odense SV, Denmark

V series

Integrated connection field bus or multi-connector valve island





T series

Individual connector valve islands
Solenoid clip or lockable connector or remote air pilot





S series

Stand alone valves
Solenoid clip or lockable connector or remote air pilot





P series

Peripheral modules
Flow control, check valves, pressure regulator, vacuum













Moduflex Valve in-line e-Configurator

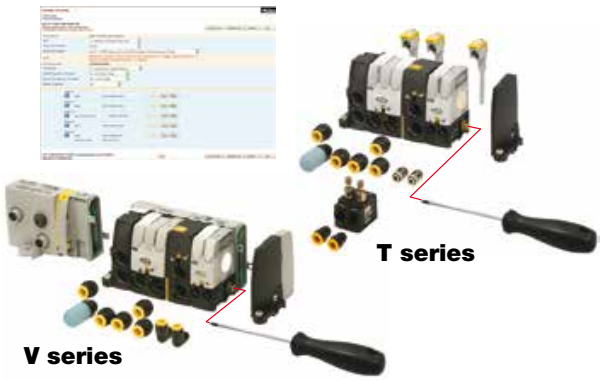



Integrated connections valve islands : V series

In a V series Moduflex valve island, electrical controls are all received by the head module and transmitted to the concerned valve modules through the modular integrated circuit.

The head module may either be a cable multi-connector or a Fieldbus communication module : the next pages show multi-connector cable and a complete choice of bus protocoles.



Valve island electrical head module :
multi-connector or field bus connection

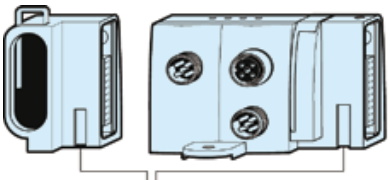

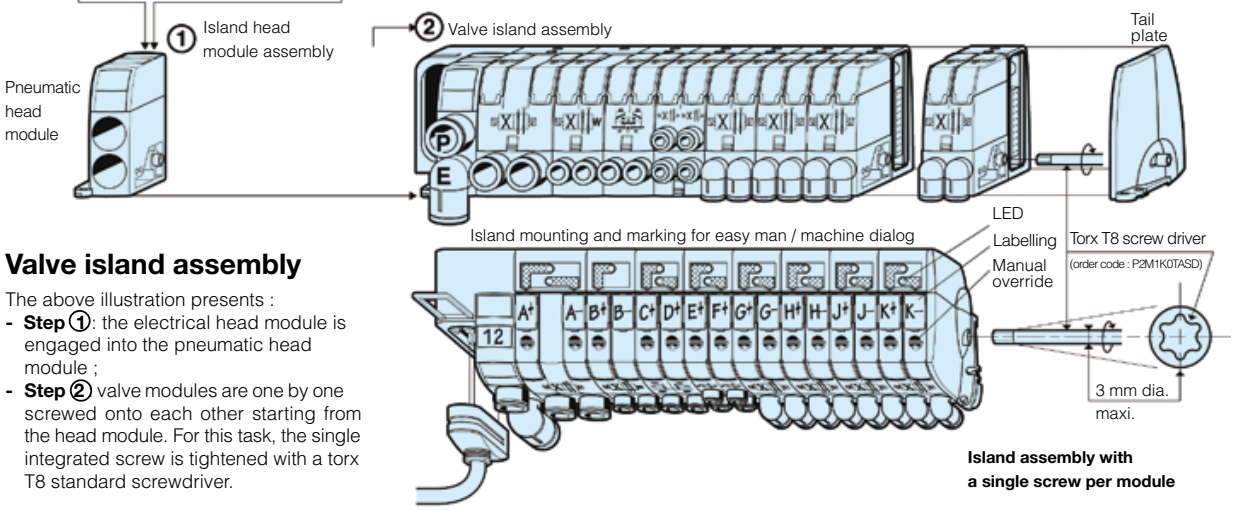

Island assembly with a single screw per module

Valve island configuration

The following page shows all valve sizes and functions that may enter into a V series valve island and, for each valve size, a choice of clip-on pneumatic connectors : tubing size, straight, elbow...
To receive its pressure supply and collect its exhaust, the island also requires a pneumatic head and tail module set and sometimes an intermediate module set with 4 configuration plates for different functions. To receive its electrical controls, the island is completed by an electrical head module, either a multi-connector or by a bus module to be chosen from the next pages.

Valve island assembly

The above illustration presents :
- **Step** ①: the electrical head module is engaged into the pneumatic head module ;
- **Step** ② valve modules are one by one screwed onto each other starting from the head module. For this task, the single integrated screw is tightened with a torx T8 standard screwdriver.

The pneumatic connectors may be clipped or unclipped at any stage.

With a LED, a manual override and a labelling for each valve pilot (see illustration), the island front face eases the "man / machine" dialog.

The resulting valve island length is expressed by the drawing below, while further size details and mountings are presented on dimensions pages.

Modules and island ordering

Choice between 3 approaches :
1 - Basic modules ordering :
The following page shows these modules supplied without connector, together with the choice of clip-on connectors separately supplied (10 units packs). This approach gives the maximum flexibility.

2 - Complete modules ordering :
Page 265 shows the ordering chart for modules supplied with their connectors.
3 - Assembled island ordering :
Page 268 shows the valve island configurator CD-Rom to specify a valve island that may be delivered assembled.

Field bus head module :
▪ width : 94 mm

Multi-connector head module :
▪ guillotine, width : 47 mm
▪ sub-D 25, width : 56 mm

Valve modules size 1 :
▪ width : 25 mm

Valve module size 2 :
▪ width : 37.5 mm

Intermediate module :
▪ width : 25 mm

Tail plate :
▪ width : 16 mm

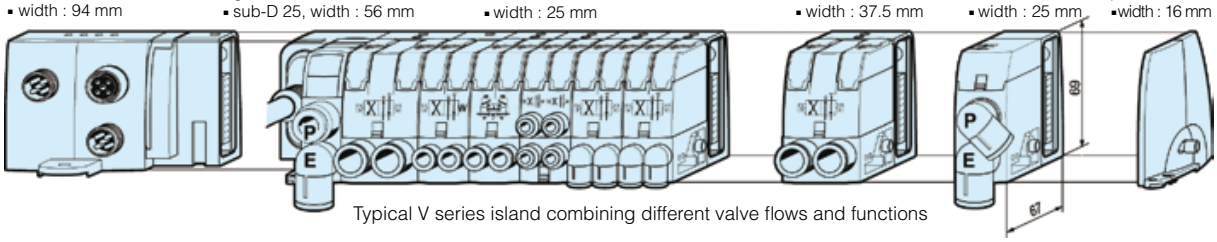

Typical V series island combining different valve flows and functions

Tel: +45 63 12 83 00 | Email: ps@hymatik.com | www.hymatik.com | Hvidkaervej 27a, DK-5250 Odense SV, Denmark

Basic modules (without connector)

Valve Modules			Size 1		Size 2	
	Symbol	Description	Weight (g)	**Order code**	Weight (g)	**Order code**
Size 1 		4/2 Solenoid spring	94	**P2M1V4ES2CV**	100	**P2M2V4ES2CV**
		4/2 Double solenoid	103	**P2M1V4EE2CV**	110	**P2M2V4EE2CV**
		2 x 3/2 NC + NC with exhaust check valves	106	**P2M1VDEE2CV**	115	**P2M2VDEE2CV**
		2 x 3/2 NO + NO with exhaust check valves	106	**P2M1VCEE2CV**	115	**P2M2VCEE2CV**
Size 2 		2 x 3/2 NC + NO with exhaust check valves	106	**P2M1VEEE2CV**	115	**P2M2VEEE2CV**
		2 x 4/2 Solenoid spring with exhaust check valves	114	**P2M1VJEE2CV**		
		3/2 NC with exhaust check valves	102	**P2M1V3ES2CV**	110	**P2M2V3ES2CV**
		4/3 Centre exhaust 2 x 3/2 NC + NC without exhaust check valves	106	**P2M1VGEE2CV**	115	**P2M2VGEE2CV**

Island head and intermediate module sets

Valve Modules			Size 2	
	Description		Weight (g)	**Order code**
 **P2M2HXT01**	Valve island pneumatic head and tail module set		64	**P2M2HXT01**
 **P2M2BXV0A**	Valve island intermediate supply module with a set of 4 configuration plates		68	**P2M2BXV0A**

Clip-On pneumatic connectors *

Valve Modules			Size 1		Size 2	
	Description	Tube OD	Weight (g)	**Order code**	Weight (g)	**Order code**
	Straight connector	G1/8"	2	**FMDG1-1**		
		4 mm	2	**FMD04-1**		
		6 mm	3	**FMD06-1**	3	**FMD06-2**
		8 mm			4	**FMD08-2**
		10 mm			5	**FMD10-2**
		12 mm			6	**FMD12-2**
	Elbow connector	G1/8"	3	**CMDG1-1**		
		4 mm	3	**CMD04-1**		
		6 mm	5	**CMD06-1**	5	**CMD06-2**
		8 mm			6	**CMD08-2**
		10 mm			7	**CMD10-2**
		12 mm			8	**CMD12-2**
	Silencer				5	**MMDVA2**
	Plug		3	**PMDXX1**	5	**PMDXX2**

* Fittings and plugs pack quantity : 10

Electrical multi-connection and field bus head modules

Multiconnector or field bus head module to be chosen from next pages.

Tel: +45 63 12 83 00 | Email: ps@hymatik.com | www.hymatik.com | Hvidkaervej 27a, DK-5250 Odense SV, Denmark

V series valve island : Electrical multi-connector head module





Description		Protection	Cable length	Weight (g)	Order code
Guillotine type	Multi-connection head module			38	**P2M2HEV0A**
	Guillotine connector with flying leads multi-cable	IP65	2 m	335	**P8LMH20M2A**
			5 m	802	**P8LMH20M5A**
			9 m	1425	**P8LMH20M9A**
Standard Sub-D 25 type	Multi-connection head module			60	**P2M2HEV0D**
	Sub-D 25 connector with flying leads multi-cable	IP40	3 m	435	**P8LMH25M3A**
			9 m	1425	**P8LMH25M9A**
		IP65	9 m	1425	**P8LMH25B9A**

V series valve island : Electrical field bus head modules for AS-i protocol

Standard AS-i protocol (up to 31 nodes) electrical head modules



Electrical module for **8 outputs** max.

- V series islands may have up to 8 solenoid pilots
- 2 nodes per module, 4 I / 4 O per node

Input connections	Weight(g)	Order code
no input	150	**P2M2HBVA10800**
8 M8 inputs	200	**P2M2HBVA10808A**
8 inputs on 4 M12	200	**P2M2HBVA10808B**



Electrical module for **4 outputs** max.

- V series islands may have up to 4 solenoid pilots
- 1 node per module, 4 I / 4 O

No inputs	150	**P2M2HBVA10400**
4 inputs on 4 M12	200	**P2M2HBVA10404B**

AS-i version 2-1 protocol (up to 62 nodes) electrical head modules



Electrical module for **6 outputs** max.

- V series islands may have up to 6 solenoid pilots
- 2 nodes per module, 4 I / 3 O per node

none	150	**P2M2HBVA20600**
8 M8 Inputs	200	**P2M2HBVA20608A**
8 inputs on 4 M12	200	**P2M2HBVA20608B**

AS-i head module accessories



P8CS0803J



P8CSY1212A

Description	Connector type	Weight (g)	Order code
Cable quick connect connector	M8 Male	25	**P8CS0803J**
	M12 Male - A coding	25	**P8CS1204J**
« Y » shape	M12 Male - 2 x M12 Female	25	**P8CSY1212A**

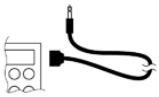

Addressing cable 1 meter	M12 Male - Jack	100	**P8LS12JACK**

V series valve island : Electrical field bus head modules for device bus

Electrical modules for 16 outputs
(The V series modules may have up to 16 solenoid pilot valves)





Description	Bus Protocol	Bus In / Bus Out	Power supply	Weight (g)	Order code
Moduflex Bus Communication module	**Profibus DP**	M12 - B coding	M12 - A coding	250	**P2M2HBVP21600**
	For GSD file, go to http://www.parker.com/pneu/moduflex				
	DeviceNet	M12 - A coding	M12 - A coding	250	**P2M2HBVD21600**
			M12 - B coding	250	**P2M2HBVD11600**
	For EDS file, go to http://www.parker.com/pneu/moduflex				
	CANopen	M12 - A coding	M12 - A coding	250	**P2M2HBVC21600**
			M12 - B coding	250	**P2M2HBVC11600**
	For EDS file, go to http://www.parker.com/pneu/moduflex				
	InterBus-S	M23 - 9 Pins	M12 - A coding	300	**P2M2HBVS11600**

Device Bus connection accessories

P2M2HBVP21600



P8CS1205AA

Description	Bus Protocol	Connector type	Weight (g)	Order code
Power supply female straight connector	All	M12 - A coding	25	**P8CS1205AA**
	DeviceNet CANopen	M12 - B coding	25	**P8CS1205AB**
Bus IN female connector	DeviceNet CANopen	M12 - A coding	25	**P8CS1205AA**
	Profibus DP	M12 - B coding	25	**P8CS1205AB**
Bus OUT male connector	DeviceNet CANopen	M12 - A coding	25	**P8CS1205BA**
	Profibus DP	M12 - B coding	25	**P8CS1205BB**
Line termination	DeviceNet CANopen	M12 - A coding	25	**P8BPA00MA**
	Profibus DP	M12 - B coding	25	**P8BPA00MB**

M12 - A coding connector

M12 - B coding connector

Tel: +45 63 12 83 00 | Email: ps@hymatik.com | www.hymatik.com | Hvidkaervej 27a, DK-5250 Odense SV, Denmark

Individual connection valve islands : T series

In a T series valve island, electrical controls are individually connected to each valve module, onto its solenoid pilot.

As an alternative, air pilot valve modules are also available, to be controlled by individual pneumatic signals.



Valve island assembly

As shown by the above illustration, the valve modules are one by one screwed onto each other, starting from the head module. For this task, the single integrated screw is tightened with a torx T8 standard screwdriver.
The pneumatic connectors may be clipped or unclipped at any stage.
With a LED, a manual override and a labelling for each valve pilot (see above illustration), the island front face eases the "man / machine" dialog.
The resulting valve island length is expressed by the drawing below, while further size details and mountings are presented on dimensions pages.

Valve pilot connections

1 - Solenoid valve modules

Electrical connectors



In its IP40 version, each solenoid shows Clip connection integrating LED and voltage surge protection. The clip connector with flying leads may be ordered separately with independent or interconnected common.
In its IP67 version, each solenoid shows a M8 connection. Lockable connectors, IP67 protected, with LED voltage surge protection and flying lead cable may be ordered for the required length.

2 - Air pilot valve modules

4 mm OD tube



No connector has to be ordered : each pneumatic pilot port includes its integrated swivable elbow 4 mm OD tube push-in connector.

Valve island configuration

The following page presents all valve sizes and functions that may enter into a T series valve island and, for each valve size, a choice of clip-on pneumatic connectors : tubing size, straight, elbow...
To receive its pressure supply and collect its exhaust, the island also requires a pneumatic head and tail module set and sometimes an intermediate module set including 4 configuration plates for different functions.
Valve modules may either be solenoid versions or air pilot versions. Mixing both versions into the same valve island is possible.

Valve island assembly

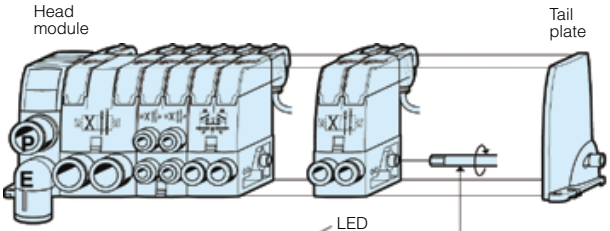

Island mounting and marking for easy man / machine dialog

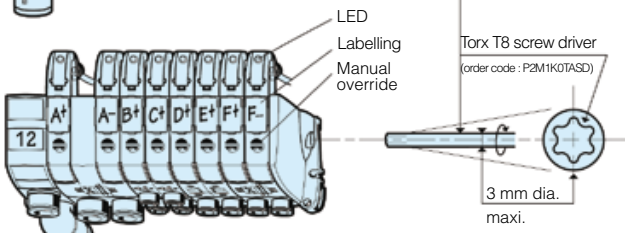

Island assembly with a single screw per module

Modules and island ordering

Choice between 3 approaches :

1 - Basic modules ordering :
The following page shows these modules supplied without connector, together with the choice of clip-on connectors separately supplied (10 units packs). This approach gives the maximum flexibility.

2 - Complete modules ordering :
Page 265 shows the ordering chart for modules supplied with their connectors.

3 - Assembled island ordering :
Page 268 shows the valve island configurator CD-Rom to specify a valve island that may be delivered assembled.

Typical T series short island for single or double acting small cylinders.

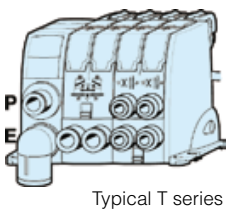

Typical T series hight flow island for both small and large cylinders.

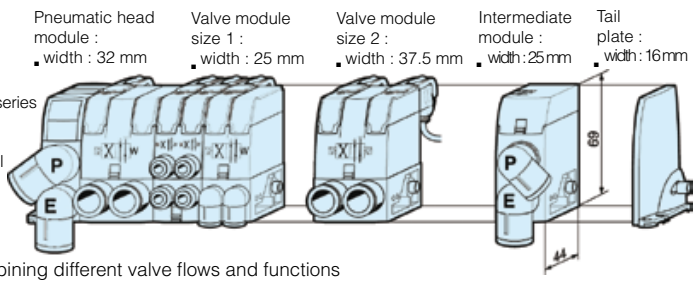

Typical T series islands combining different valve flows and functions

Tel: +45 63 12 83 00 | Email: ps@hymatik.com | www.hymatik.com | Hvidkaervej 27a, DK-5250 Odense SV, Denmark

Basic modules (without connector)

Valve Modules


Size 1
Dual 4/2


Size 1


Size 2

Symbol	Description	Actuator	Pilot connector	W (g)	Size 1 Order code	W (g)	Size 2 Order code
	4/2 Spring return	Solenoid	M8 Lockable	68	**P2M1T4ES2C**	74	**P2M2T4ES2C**
			Clip	68	**P2M1T4ES2CW**	74	**P2M2T4ES2CW**
		Air pilot		63	**P2M1T4PS**	69	**P2M2T4PS**
	4/2 Double pilot	Solenoid	M8 Lockable	77	**P2M1T4EE2C**	83	**P2M2T4EE2C**
			Clip	77	**P2M1T4EE2CW**	83	**P2M2T4EE2CW**
		Air pilot		67	**P2M1T4PP**	73	**P2M2T4PP**
	2 x 3/2 NC + NC with exhaust check valves	Solenoid	M8 Lockable	80	**P2M1TDEE2C**	94	**P2M2TDEE2C**
			Clip	80	**P2M1TDEE2CW**	94	**P2M2TDEE2CW**
		Air pilot		70	**P2M1TDPP**	84	**P2M2TDPP**
	2 x 3/2 NO + NO with exhaust check valves	Solenoid	M8 Lockable	80	**P2M1TCEE2C**	94	**P2M2TCEE2C**
			Clip	80	**P2M1TCEE2CW**	94	**P2M2TCEE2CW**
		Air pilot		70	**P2M1TCPP**	84	**P2M2TCPP**
	2 x 3/2 NC + NO with exhaust check valves	Solenoid	M8 Lockable	80	**P2M1TEEE2C**	94	**P2M2TEEE2C**
			Clip	80	**P2M1TEEE2CW**	94	**P2M2TEEE2CW**
		Air pilot		70	**P2M1TEPP**	84	**P2M2TEPP**
	2 x 4/2 Spring return with exhaust check valves	Solenoid	M8 Lockable	88	**P2M1TJEE2C**		
			Clip	88	**P2M1TJEE2CW**		
		Air pilot		78	**P2M1TJPP**		
	3/2 NC with exhaust check valves	Solenoid	M8 Lockable	76	**P2M1T3ES2C**	90	**P2M2T3ES2C**
			Clip	76	**P2M1T3ES2CW**	90	**P2M2T3ES2CW**
		Air pilot		71	**P2M1T3PS**	70	**P2M2T3PS**
	4/3 Centre exhaust 2 x 3/2 NC + NC without exhaust check valves	Solenoid	M8 Lockable	80	**P2M1TGEE2C**	94	**P2M2TGEE2C**
			Clip	80	**P2M1TGEE2CW**	94	**P2M2TGEE2CW**
		Air pilot		70	**P2M1TGPP**	84	**P2M2TGPP**

Island head and intermediate module sets

Valve Modules


P2M2HXT01


P2M2BXT0A

Description	W (g)	Size 2 Order code
Valve island pneumatic head and tail module set	64	**P2M2HXT01**
Valve island intermediate supply module with a set of 4 configuration plates	64	**P2M2BXT0A**

Clip-On pneumatic connectors *

Valve Modules





* Fittings and plugs pack quantity : 10

Description	Tube OD	W (g)	Size 1 Order code	W (g)	Size 2 Order code
Straight connector	G1/8"	2	**FMDG1-1**		
	4 mm	2	**FMD04-1**		
	6 mm	3	**FMD06-1**	3	**FMD06-2**
	8 mm			4	**FMD08-2**
	10 mm			5	**FMD10-2**
	12 mm			6	**FMD12-2**
Elbow connector	G1/8"	3	**CMDG1-1**		
	4 mm	3	**CMD04-1**		
	6 mm	5	**CMD06-1**	5	**CMD06-2**
	8 mm			6	**CMD08-2**
	10 mm			7	**CMD10-2**
	12 mm			8	**CMD12-2**
Silencer				5	**MMDVA2**
Plug		3	**PMDXX1**	5	**PMDXX2**

Electrical connectors

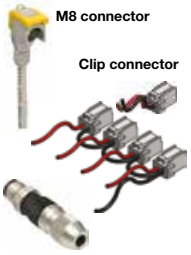
M8 connector
Clip connector

Description	Connector type	Cable length	W (g)	Order code
Individual Clip-on connector – IP67	M8 / 2 x Flying leads	2 meters	62	**P8LS08L226C**
Including LED and surge protection		5 meters	155	**P8LS08L526C**
2 Flying leads		9 meters	180	**P8LS08L926C**
Clip-on connector – IP40	1 x Clip connector	1 meter	8	**P8LW021C**
Individual : Including 2 flying leads	2 x Clip connectors	1 meter	12	**P8LW021C02**
Multiple : Including 1 common (0 Vdc)	4 x Clip connectors	1 meter	20	**P8LW021C04**
and 1 flying lead per connector	8 x Clip connectors	1 meter	36	**P8LW021C08**
Straight cable quick connect to thread	M8		12	**P8CS0803J**
connector, IP67 protected	M12		15	**P8CS1204J**

Stand-Alone Valve Modules : S series

Very useful to control isolated cylinders, these stand-alone valves module are compact and easy to mount on the machines with neat electrical and pneumatic connections.

As an alternative to electrical controls, valves with air pilots are also available, to be controlled by individual pneumatic signals.



Valve functions

The following page shows all valve sizes and functions and, for each valve size, a choice of clip-on pneumatic connectors : tubing size, straight, elbow, ...

Valve main connections

- Outlets to cylinders (ports 2 and 4) on one side.
- Supply P (port 1) and exhaust E (port 3) on the other side. At port 3, exhaust may be collected or receive a clip-on muffler.



Valve mounting

All valves may be mounted either with side screws or with their integrated retractable brackets.

Side screw mounting

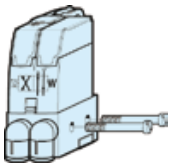

The brackets are then retracted.

Optional foot mounting

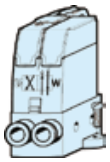

The brackets are then extended.

Valve pilot connections

1- Solenoid valve modules

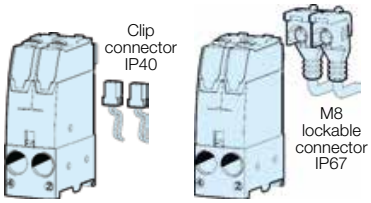

In its IP40 version, each solenoid shows Clip connection integrating LED and voltage surge protection. The clip connector with flying leads may be ordered separately with independent or interconnected common. In its IP67 version, each solenoid shows a M8 connection. Lockable connectors, IP67 protected, with LED voltage surge protection and flying lead cable may be ordered for the required length.

2- Air pilot valve modules

No connector has to be ordered : each pneumatic pilot port includes its integrated swivable elbow 4 mm OD tube push-in connector.

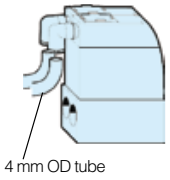

Modules and island ordering

Choice between 2 approaches :

1 - Basic modules ordering :
The following page shows these modules supplied without connector, together with the choice of clip-on connectors separately supplied (10 units packs). This approach gives the maximum flexibility.

2 - Complete modules ordering :
Ordering chart for modules supplied with their pneumatic and electrical connectors and muffler.

Valve module size 1

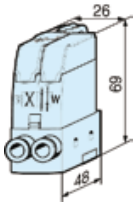

Valve module size 2

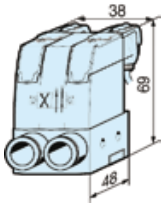

Tel: +45 63 12 83 00 | Email: ps@hymatik.com | www.hymatik.com | Hvidkaervej 27a, DK-5250 Odense SV, Denmark

Valve Modules







Symbol	Description	Actuator	Pilot connector	W (g)	Size 1 Order code	W (g)	Size 2 Order code
	4/2 Spring return	Solenoid	M8 Lockable	72	**P2M1S4ES2C**	78	**P2M2S4ES2C**
			Clip	72	**P2M1S4ES2CW**	78	**P2M2S4ES2CW**
		Air pilot		67	**P2M1S4PS**	73	**P2M2S4PS**
	4/2 Double pilot	Solenoid	M8 Lockable	87	**P2M1S4EE2C**	93	**P2M2S4EE2C**
			Clip	87	**P2M1S4EE2CW**	93	**P2M2S4EE2CW**
		Air pilot		77	**P2M1S4PP**	73	**P2M2S4PP**
	2 x 3/2 NC + NC with exhaust check valves	Solenoid	M8 Lockable	85	**P2M1SDEE2C**	91	**P2M2SDEE2C**
			Clip	85	**P2M1SDEE2CW**	91	**P2M2SDEE2CW**
		Air pilot		75	**P2M1SDPP**	81	**P2M2SDPP**
	2 x 3/2 NO + NO with exhaust check valves	Solenoid	M8 Lockable	85	**P2M1SCEE2C**	91	**P2M2SCEE2C**
			Clip	85	**P2M1SCEE2CW**	91	**P2M2SCEE2CW**
		Air pilot		75	**P2M1SCPP**	81	**P2M2SCPP**
	2 x 3/2 NC + NO with exhaust check valves	Solenoid	M8 Lockable	85	**P2M1SEEE2C**	91	**P2M2SEEE2C**
			Clip	85	**P2M1SEEE2CW**	91	**P2M2SEEE2CW**
		Air pilot		75	**P2M1SEPP**	81	**P2M2SEPP**
	3/2 NC with exhaust check valves	Solenoid	M8 Lockable	80	**P2M1S3ES2C**	86	**P2M2S3ES2C**
			Clip	80	**P2M1S3ES2CW**	86	**P2M2S3ES2CW**
		Air pilot		70	**P2M1S3PS**	76	**P2M2S3PS**
	4/3 Centre exhaust	Solenoid	M8 Lockable	85	**P2M1SGEE2C**	91	**P2M2SGEE2C**
	2 x 3/2 NC + NC without exhaust check valves		Clip	85	**P2M1SGEE2CW**	91	**P2M2SGEE2CW**
		Air pilot		75	**P2M1SGPP**	81	**P2M2SGPP**

Clip-On pneumatic connectors *

Valve Modules







Description	Tube OD	W (g)	Size 1 Order code	W (g)	Size 2 Order code
Straight connector	G1/8"	2	**FMDG1-1**		
	4 mm	2	**FMD04-1**		
	6 mm	3	**FMD06-1**	3	**FMD06-2**
	8 mm			4	**FMD08-2**
	10 mm			5	**FMD10-2**
	12 mm			6	**FMD12-2**
Elbow connector	G1/8"	3	**CMDG1-1**		
	4 mm	3	**CMD04-1**		
	6 mm	5	**CMD06-1**	5	**CMD06-2**
	8 mm			6	**CMD08-2**
	10 mm			7	**CMD10-2**
	12 mm			8	**CMD12-2**
Silencer		3	**MMDVA1**	5	**MMDVA2**
Plug		3	**PMDXX1**	5	**PMDXX2**

* Fittings and plugs pack quantity : 10

Electrical connectors



Description	Connector type	Cable length	W (g)	Order code
Individual Clip-on connector – IP67	M8 / 2 x Flying leads	2 meters	62	**P8LS08L226C**
Including LED and surge protection		5 meters	155	**P8LS08L526C**
2 Flying leads		9 meters	180	**P8LS08L926C**
Clip-on connector – IP40	1 x Clip connector	1 meter	8	**P8LW021C**
Individual : Including 2 flying leads	2 x Clip connectors	1 meter	12	**P8LW021C02**
Multiple : Including 1 common (0 Vdc)	4 x Clip connectors	1 meter	20	**P8LW021C04**
and 1 flying lead per connector	8 x Clip connectors	1 meter	36	**P8LW021C08**
Straight cable quick connect to thread	M8		12	**P8CS0803J**
connector, IP67 protected	M12		15	**P8CS1204J**

Peripheral Valve Modules : P series

Four additional peripheral modules complete the valve system in order to facilitate the installation of specific cylinder controls :
- Dual flow control, for cylinder speed adjusting;
- Dual pilot operated check valve, for cylinder positionning;
- Pressure regulator, for cylinder thrust adjusting;
- Vacuum generator, for vacuum pad controls.



Module function selection

Dual flow control

By controlling the exhaust flows of a double acting cylinder, this module can adjust both speeds : forward and backward.

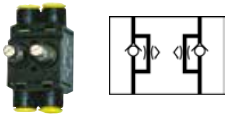

Dual pilot operated check valve

Combined with a double 3/2 NC + NC valve, this module will block flows and stop cylinder movement as soon as the valve outputs are both exhausted. Better than a 3 position closed centre valve, it provides accurate positionning when mounted close to the cylinder.

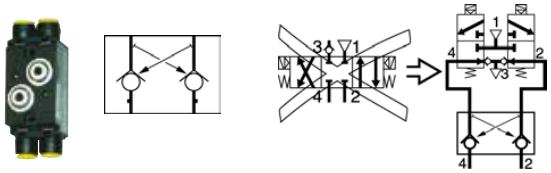

Pressure regulator

The thrust developped by a cylinder often requires adjustment by controlling the pressure to the front or back of the piston. This pressure regulator module enables manual adjustment of pressure on one side of the piston, with visual indication provided by the pressure gauge.

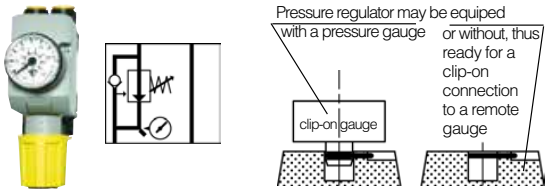

Vacuum generator

This multi-purpose module controls vacuum pads with a choice between two basics schematics :
- Controlled with only one 3/2 NC valve, the vacuum generator provides vacuum to the pads during valve actuation and then blow-off supplied from an integrated chamber.
- Controlled with a double 3/2 NC + NC, the vacuum generator provides vacuum during the first valve actuation, and then strong blow-off from the second valve.

Integrated blow-off flow controller. Optional plug-in vacuum sensor.

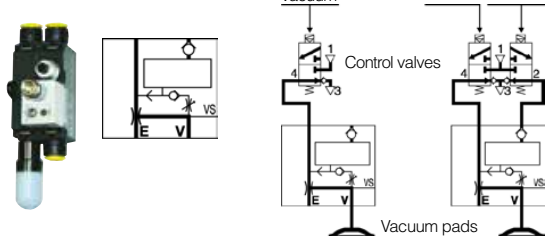

Module installation selection

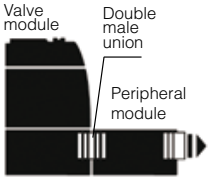

Stand alone valve complete with a plug-in peripheral module



Peripheral modules may either be mounted :
- Plugged into the valve module through double male unions;
- Or in line, close to the cylinder to control it better.



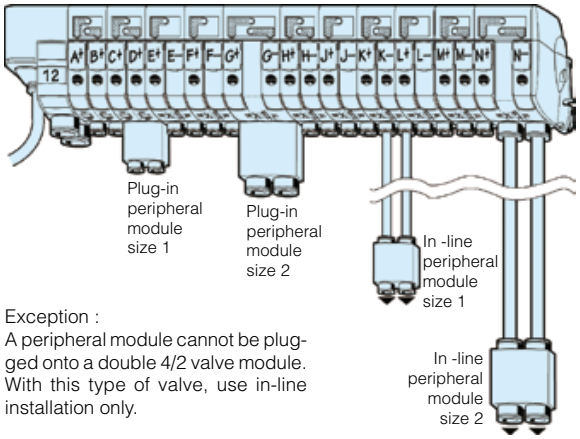

Exception :
A peripheral module cannot be plugged onto a double 4/2 valve module. With this type of valve, use in-line installation only.

Tel: +45 63 12 83 00 | Email: ps@hymatik.com | www.hymatik.com | Hvidkaervej 27a, DK-5250 Odense SV, Denmark

Basic peripheral modules (without connector)

Peripheral Modules					Size 1		Size 2
Symbol	Description			Weight (g)	Order code	Weight (g)	Order code
	Dual flow control			50	**P2M1PXFA**	50	**P2M2PXFA**
	Dual P.O. check valve			50	**P2M1PXCA**	50	**P2M2PXCA**
	Pressure regulator	Pressure range	Gauge				
		0 - 2 bar	0 - 4 bar	135	**P2M1PXSR**	135	**P2M2PXSR**
			Without	105	**P2M1PXST**	165	**P2M2PXST**
		0 - 4 bar	0 - 7 bar	135	**P2M1PXSM**	135	**P2M2PXSM**
			Without	105	**P2M1PXSL**	165	**P2M2PXSL**
		0 - 8 bar	0 - 11 bar	135	**P2M1PXSG**	135	**P2M2PXSG**
			Without	105	**P2M1PXSN**	165	**P2M2PXSN**
	90% Vacuum generator			30	**P2M1PXVA**		

Clip-On pneumatic connectors *

Valve Modules				Size 1		Size 2
	Description	Tube OD	Weight (g)	Order code	Weight (g)	Order code
	Straight connector	G1/8"	2	**FMDG1-1**		
		4 mm	2	**FMD04-1**		
		6 mm	3	**FMD06-1**	3	**FMD06-2**
		8 mm			4	**FMD08-2**
		10 mm			5	**FMD10-2**
		12 mm			6	**FMD12-2**
	Elbow connector	G1/8"	3	**CMDG1-1**		
		4 mm	3	**CMD04-1**		
		6 mm	5	**CMD06-1**	5	**CMD06-2**
		8 mm			6	**CMD08-2**
		10 mm			7	**CMD10-2**
		12 mm			8	**CMD12-2**
	Double male union		5	**HMDXX1**	8	**HMDXX2**
	Silencer		3	**MMDVA1**		
	Plug		3	**PMDXX1**	5	**PMDXX2**

* Fittings and plugs pack quantity : 10

Clip-on accessories

	Description	Connection	Pressure range	Weight (g)	Order code
	Clip-on pressure gauge	Clip-on	0 to 4 bar	30	**P2M1K0GT**
	for pressure regulator modules,		0 to 7 bar	30	**P2M1K0GL**
	size 1 or size 2		0 to 11 bar	30	**P2M1K0GN**
	Analog (1 - 5 Vdc) Vacuum Sensor	Diam. 4 mm tube	0 to -1 bar	25	**MPS-V8T4-AG**
	Flying lead 2 meter cable	Diam. 6 mm tube	0 to -1 bar	25	**MPS-V8T-AG**
	Dig. PNP / Ana (4 - 20 mA) Vacuum Sensor 15 cm cable - M8 4 pin's connector	G 1/8" male	0 to -1 bar	45	**MPS-V34G-PCI**

Parker Hannifin Corporation
Pneumatic Division - Europe

Tel: +45 63 12 83 00 | Email: ps@hymatik.com | www.hymatik.com | Hvidkaervej 27a, DK-5250 Odense SV, Denmark

Moduflex Valve Island e-Configurator

The comprehensive **Moduflex Valve CAD e-Configurator** enable online Moduflex Valve Island configuration giving Bill of Material and 3D or 2D CAD downoad

Go to http://www.parker.com/pde/cad to start

Stacking Air Valve
Moduflex P2M Series

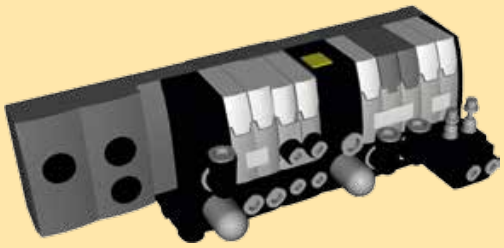

Valve island configuration practice :



Get the bill of material

By clicking on View Summary button :

1. View the bill of material :
   - Head and Tail Set
   - Valves detail
2. Click to Print

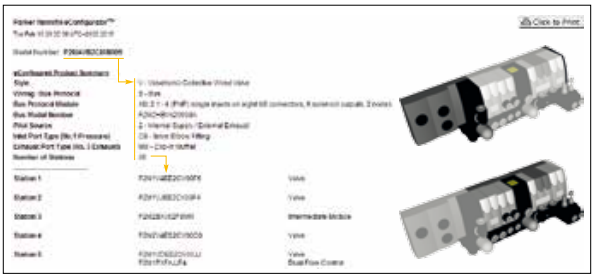

Download 2D or 3D CAD

By clicking on Generate CAD button :

1. Select to view, download or e-mail your CAD file
2. Select your best file format
3. Submit Request



1 - Multi-connector or sub-D 25 valve island

Multi-connector or sub-D 25 electrical head module width : 15 mm

Head and tail pneumatic module set width : 48 mm

Modules size 1 width : 25 mm

Modules size 2 width : 37.5 mm

Intermediate module width : 25 mm

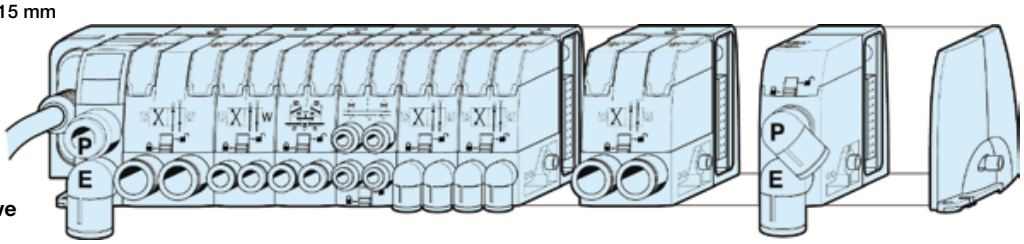

Island total width depending on valve composition

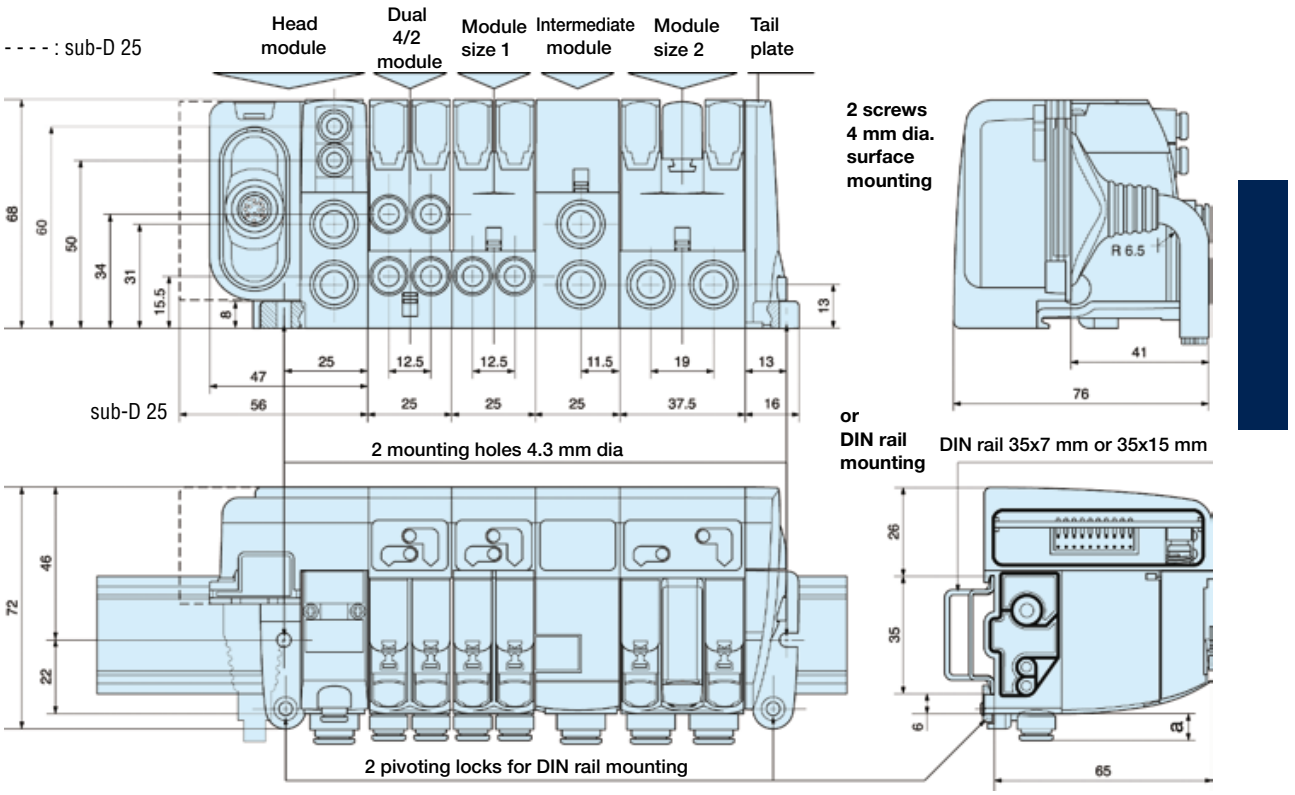

Special case : 4/3 closed centre function within island version : Add the dimensions of the dual P.O. check valve module plugged into the island.

Island head and intermediate modules

	a	b	c
6 mm tube OD	8	13	16
8 mm tube OD	9	16	19
10 mm tube OD	13	18	22
12 mm tube OD	13	19	25
muffler		40	

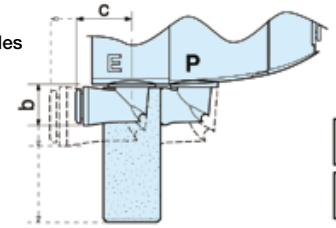

Island valves modules

	OD tube	a	b	c
Size 1 modules	4 mm	8	10	12
	6 mm	8	13	16
Size 2 modules	8 mm	9	16	19
	10 mm	13	18	22

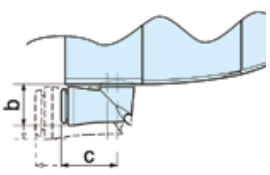

Tel: +45 63 12 83 00 | Email: ps@hymatik.com | www.hymatik.com | Hvidkaervej 27a, DK-5250 Odense SV, Denmark

2 - Field bus connected islands

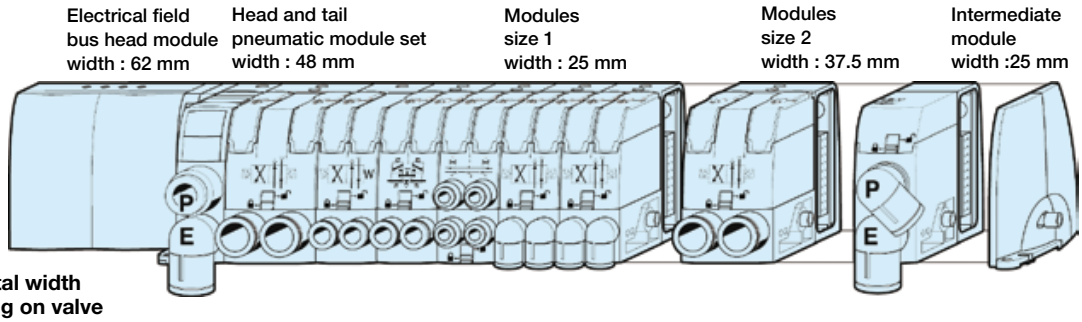

Island total width depending on valve composition

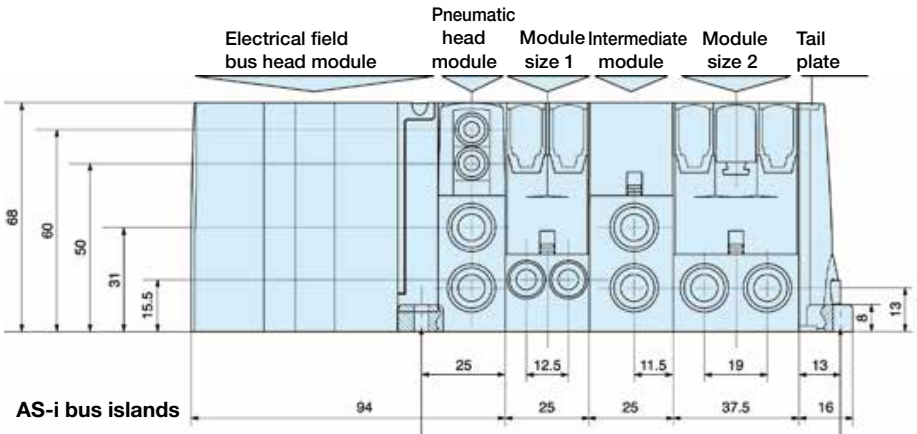

2 screws 4 mm dia. surface mounting

or DIN rail mounting

DIN rail 35x7 mm or 35x15 mm

AS-i bus islands

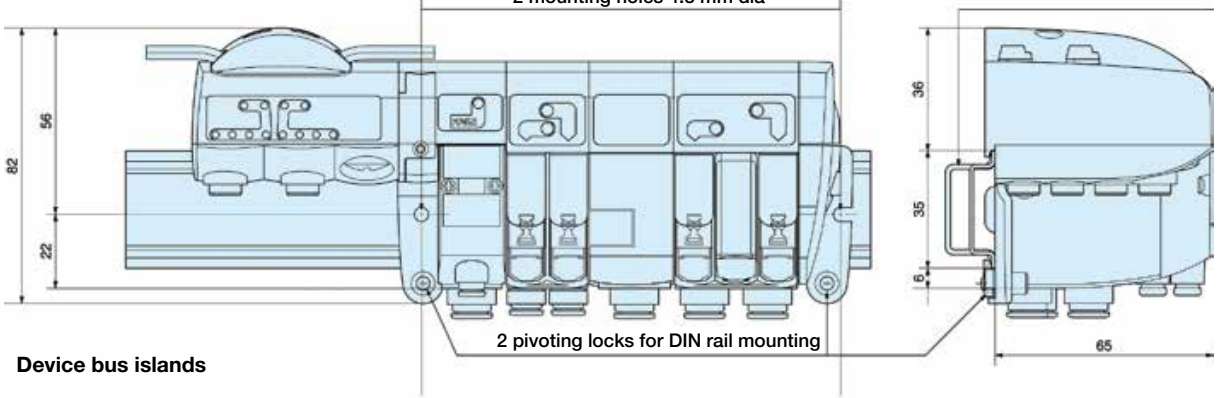

Device bus islands

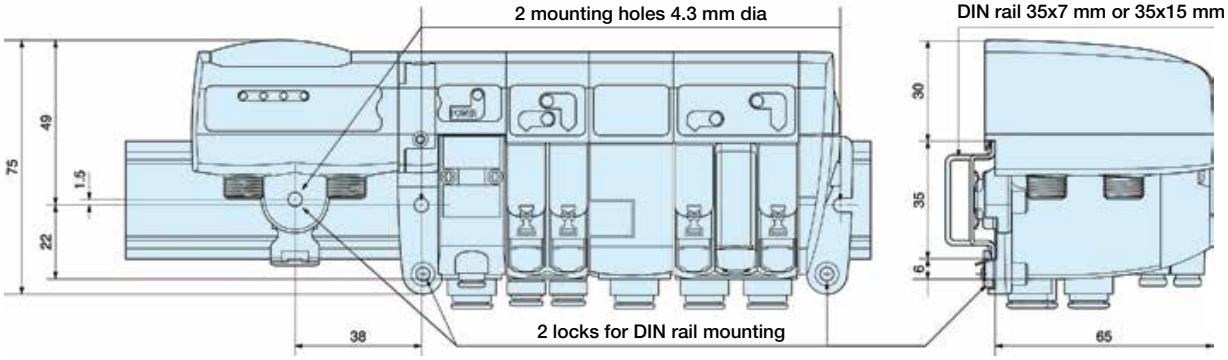

Island total width depending on valve composition

With IP67 Lockable connector

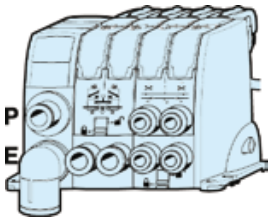

With IP40 Clip connector

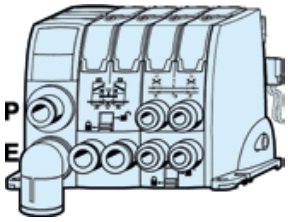

width ⇒

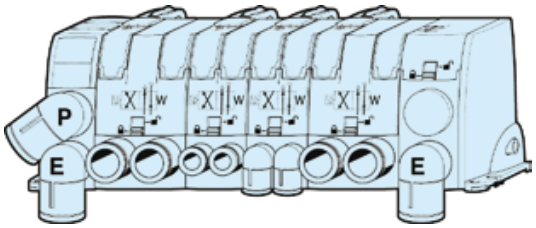

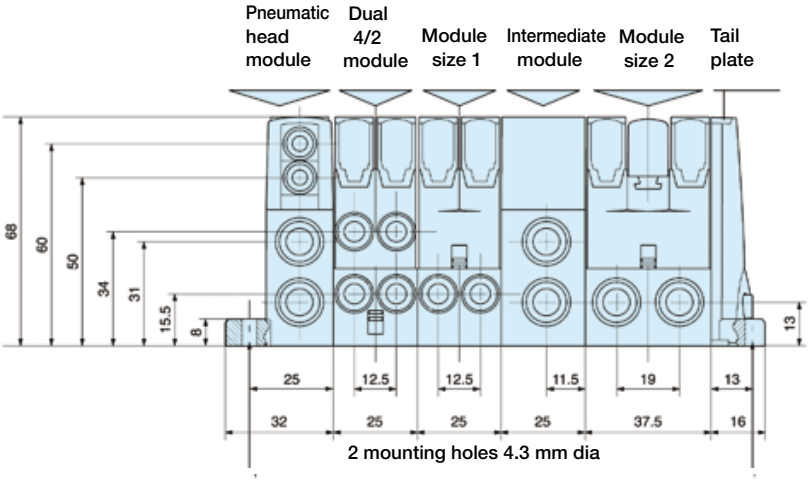

2 screws 4 mm dia. surface mounting

or DIN rail mounting

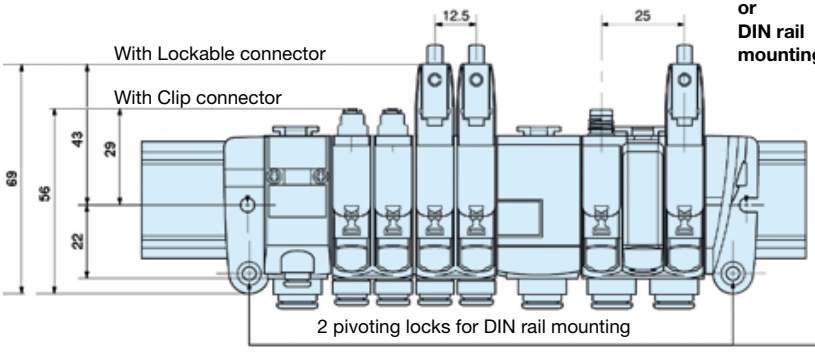

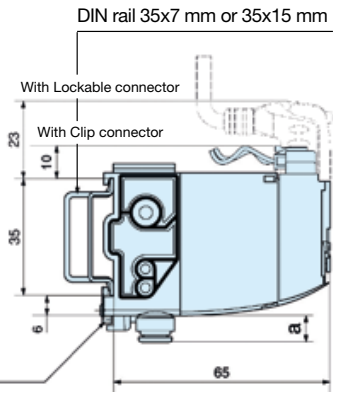

Special case : 4/3 closed centre function within island version :
Add the dimensions of the dual P.O. check valve module plugged into the island.

Island head and intermediate modules

	a	b	c
6 mm tube OD	8	13	16
8 mm tube OD	9	16	19
10 mm tube OD	13	18	22
12 mm tube OD	13	19	25
muffler		40	

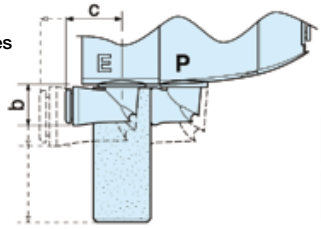

Island valves modules

	OD tube	a	b	c
Size 1 modules	4 mm	8	10	12
	6 mm	8	13	16
Size 2 modules	8 mm	9	16	19
	10 mm	13	18	22

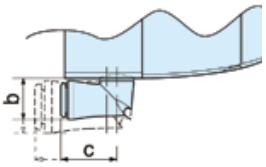

Tel: +45 63 12 83 00 | Email: ps@hymatik.com | www.hymatik.com | Hvidkaervej 27a, DK-5250 Odense SV, Denmark

Stand-alone valve size 1

surface mounting with screws
4 mm dia. into retractable brackets 3 mm thick



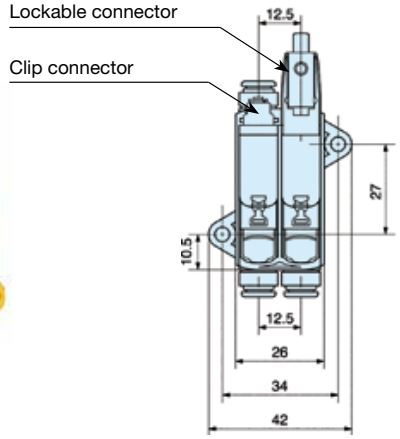

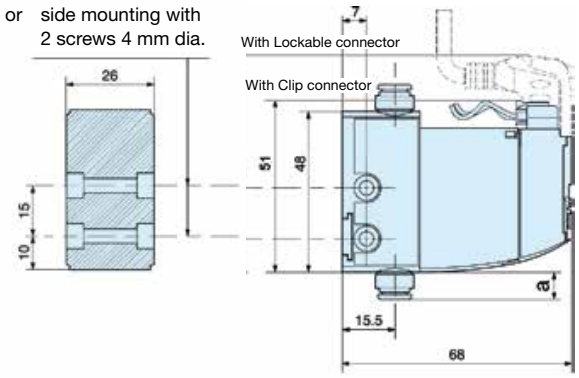

Stand-alone valve size 2



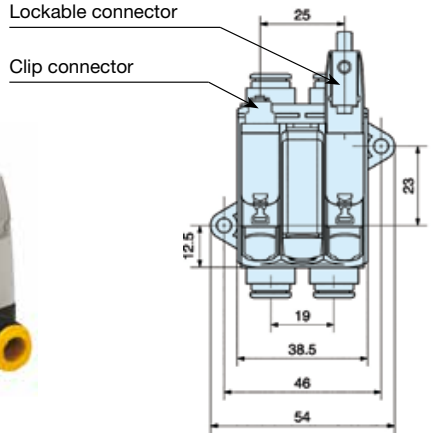

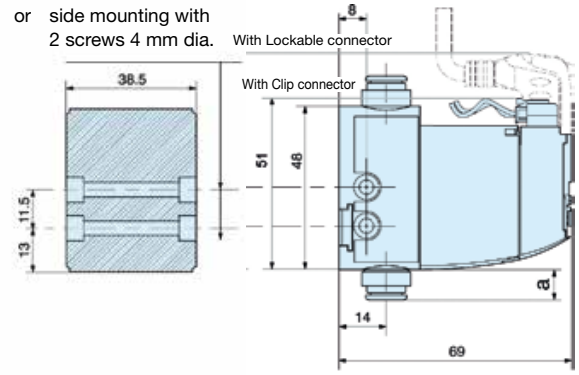

Dimensions and mountings of the stand-alone valves 4/2, double and single 3/2, 4/3 vented centre and 4/3 pressure centre.

Special case : 4/3 closed centre. Add the dual P.O. check valve module that has been plugged in the basic valve.

		a	b	c
Size 1 modules	4 mm tube OD	8	10	12
	6 mm tube OD	8	13	16
	muffler		31	
Size 2 modules	8 mm tube OD	9	16	19
	10 mm tube OD	13	18	22
	muffler		40	

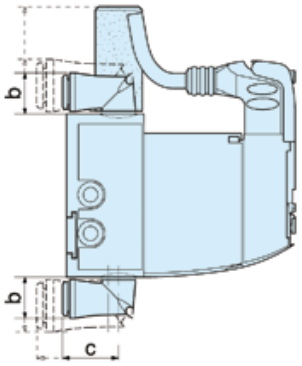

Tel: +45 63 12 83 00 | Email: ps@hymatik.com | www.hymatik.com | Hvidkaervej 27a, DK-5250 Odense SV, Denmark

Reminder : peripheral modules may either be plugged in the valve output ports or mounted in line separate from the valve



Dual flow control module size 1

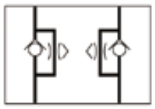



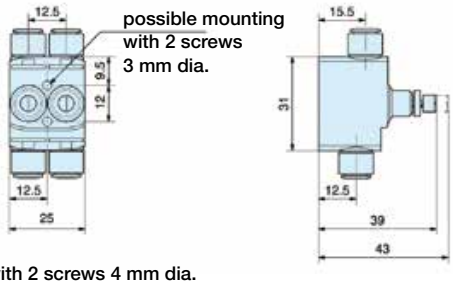

Pressure regulation module size 1

mounting with 2 screws 4 mm dia.
on retractable brackets

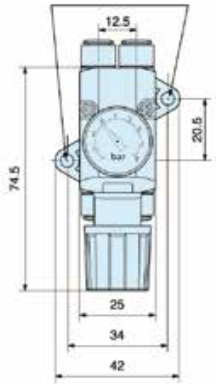

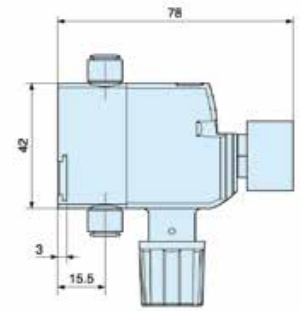

- with gauge

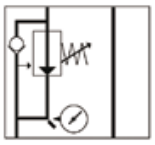



- without gauge

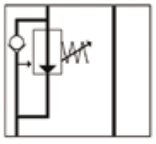



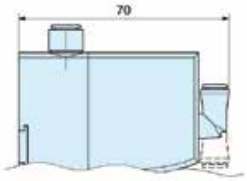

swivel elbow push-in
connector 4 mm OD tube

Dual P.O. check valve module size 1

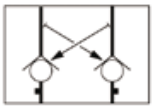



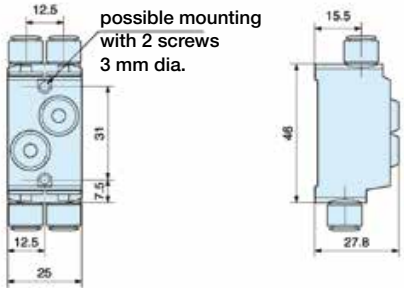

Dual flow control module size 2

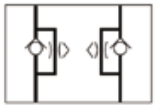



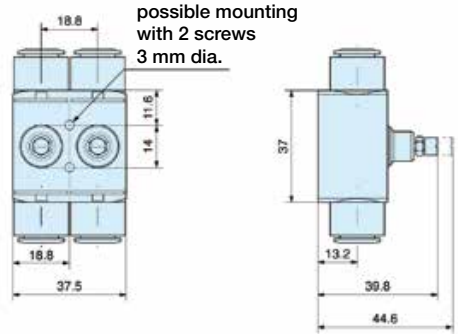

Tel: +45 63 12 83 00 | Email: ps@hymatik.com | www.hymatik.com | Hvidkaervej 27a, DK-5250 Odense SV, Denmark

Pressure regulation module size 2

- with gauge

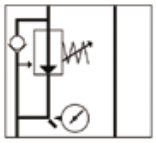



- without gauge

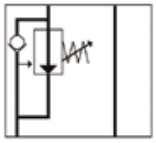



mounting with 2 screws 4 mm dia.
on retractable brackets

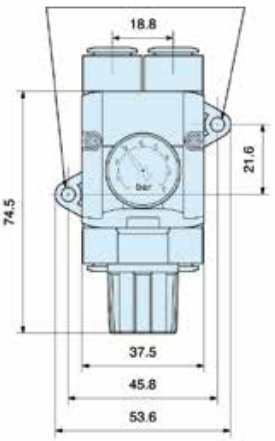

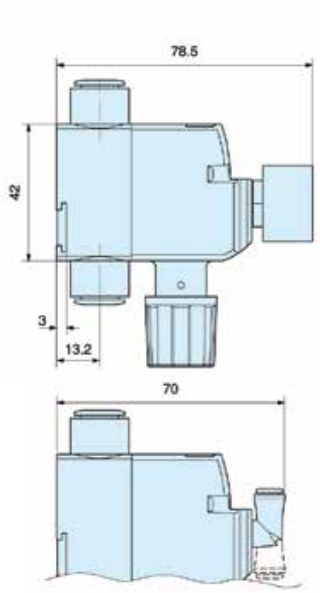

swivel elbow push-in
connector 4 mm OD tube

Dual P.O. check valve module size 2

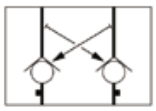



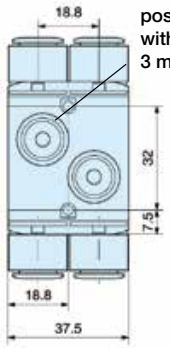

possible mounting
with 2 screws
3 mm dia.

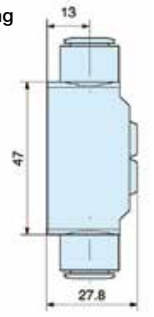

Vacuum generator module

In-line

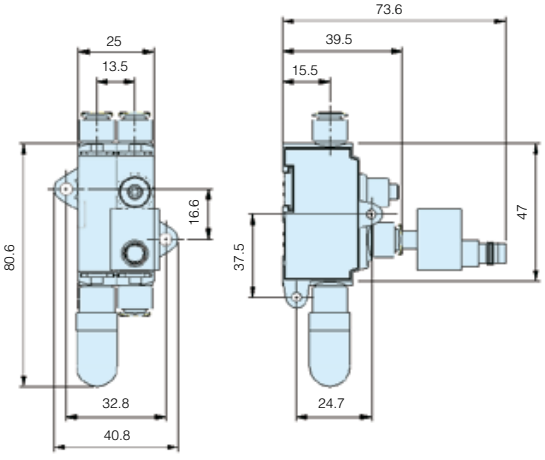

With Moduflex valve

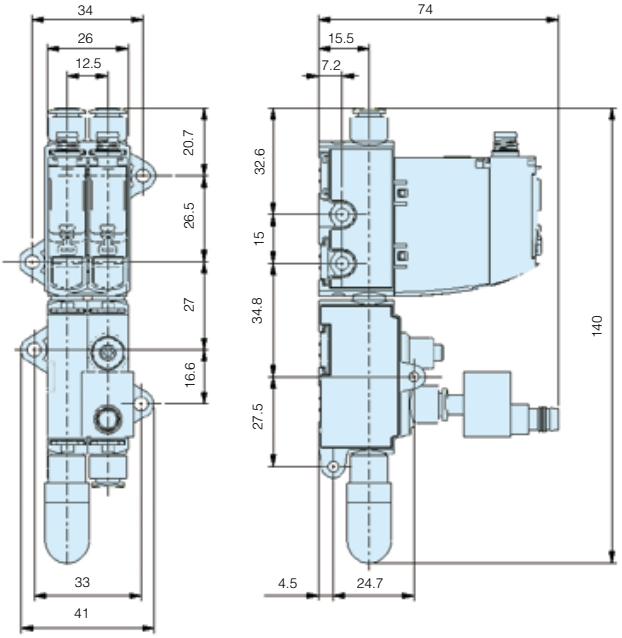

Tel: +45 63 12 83 00 | Email: ps@hymatik.com | www.hymatik.com | Hvidkaervej 27a, DK-5250 Odense SV, Denmark









H Series Industrial Communication System

Moduflex Bus / TURCK BL67

*H Series Industrial Communication System for **centralised** and **decentralised** applications*



H Series Industrial Communication System for Centralised applications

H Series Industrial Communication System has 4 major components :

- **Communication interface modules** provide the network-interface circuitry
- **I/O modules** provide the field interface, system-interface circuitry, and bases for mounting
- **Power distribution module** provide the solution to expandability of the H Series Industrial Communication System or multiple power supply

Moduflex Bus System for Decentralised applications

The Moduflex communication module is directly attach the either, a Moduflex, H Series Micro or H Series ISO manifold in a compact valve island directly connectable to the industrial network.

Tel: +45 63 12 83 00 | Email: ps@hymatik.com | www.hymatik.com | Hvidkaervej 27a, DK-5250 Odense SV, Denmark

Pneumatic variants using H Series Industrial Communication system for Centralised applications

Device with electric modules only



H Series Industrial Communication with H Series Micro Valves extended device



H Series Industrial Communication with H Series Micro Valves island



H Series Industrial Communication with H Series ISO valves island

ISO 15407-2 – HA & HB
ISO 5599-2 – H1 to H3



Pneumatic variants using Moduflex Fieldbus modules for Decentralised applications

Moduflex Bus with Moduflex Valve System



Moduflex Bus with H Series Micro Valves island



Moduflex Bus With H Series ISO 15407-2 or 5599-2 valves island

ISO 15407-2 – HA & HB
ISO 5599-2 – H1 to H3



Pneumatic variants using TURCK BL67 H Series Industrial Communication system for Centralised applications

TURCK BL67 with H Series Micro Valves Island



TURCK BL67 with H Series ISO Valves Island

ISO 15407-2 – HA & HB
ISO 5599-2 – H1 to H3

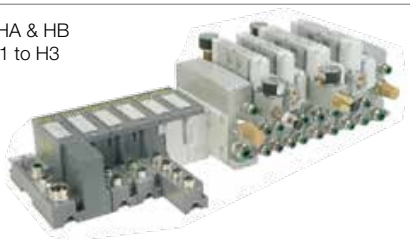

H Series Industrial Communication Device constitution overview for a Centralised application

For main device

For both main and extended devices

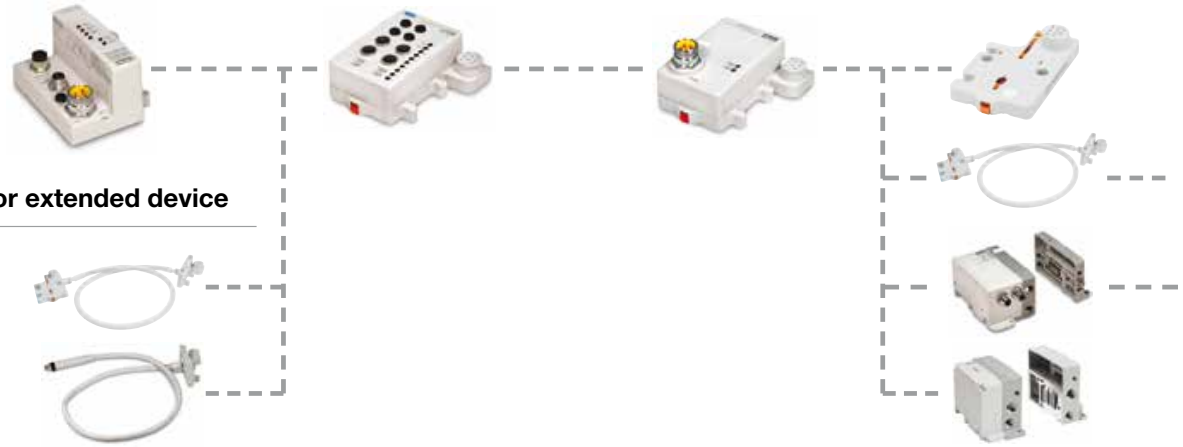

For extended device

Communication modules :
- Fieldbus or Industrial Ethernet protocol
- Network connection
- Separated 24VDC for logic and user power supply
- Configuration with codding wells and bus status display by LED

Bus extender cable :
- Cable linking extended device through the Sub-network
- Sub-network connection from H Series Industrial Communication module or H Series Micro Valve driver
- Transfering both sub-network communication and 5VDC for bus power supply

I/O modules :
- Choice of Digital or Analogic I/O modules offering multiple industrial connection types
- Connection to the Sub-network and the separated 24VDC for both logic and user through the socket
- I/O and sub-network status display by LEDs

Power extender module :
- Additional separated 24VDC power supply for logic and user allowing multiple permanant or safety power supply recommandations
- Both Logic and User electrical power supply display by separated LEDs

End section :
- Specific socket or valve driver without extender bus connector for end section

Prologation section :
- Specific socket with sub-network extender cable and extended device head plate
- Valve driver including extender bus connector for sub-network continuity

Moduflex constitution overview for a Decentralised application

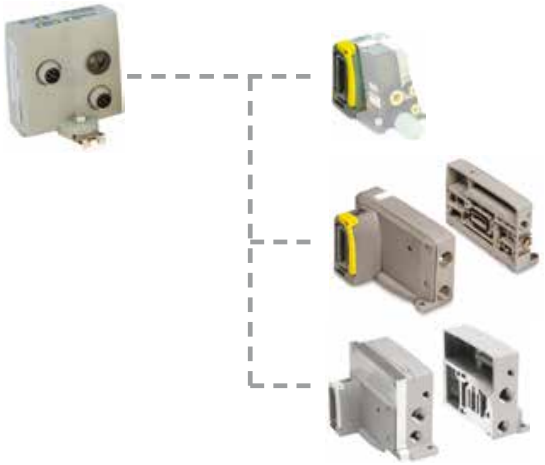

Communication module :
- Fieldbus protocols
- Network connection
- Separated power supply for commmunication and solenoid valves
- Addressing and speed communication configuration by codding wells
- Bus status display by LED

Bus module adaptor :
Using the appropriate adaptor, the Moduflex Bus module can be assembled to :
- Moduflex Valve System
- H Series Micro Valves
- H Series ISO 15407-2 – HA & HB
- H Series ISO 5599-2 – H1

Tel: +45 63 12 83 00 | Email: ps@hymatik.com | www.hymatik.com | Hvidkaervej 27a, DK-5250 Odense SV, Denmark

TURCK BL67 Device constitution overview for a Centralised application

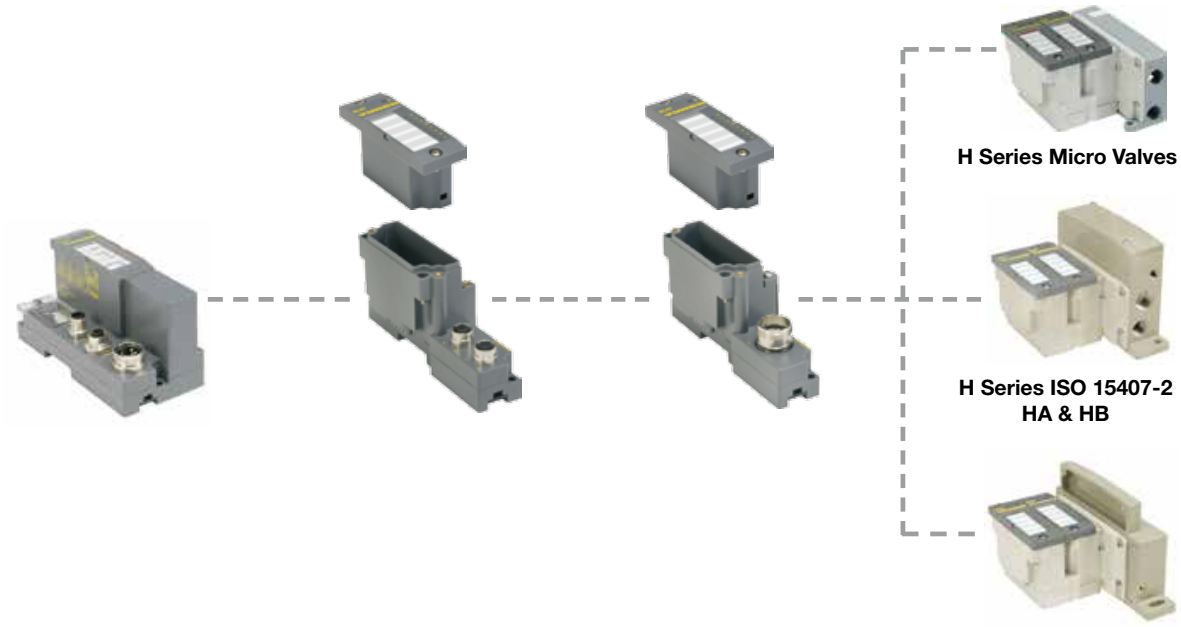

TURCK BL67 communication gateway

H Series Industrial Communication :

- Linked to a TURCK BL67 communication module (programmable or not programmable), the device can be connected to a wide choice of Fieldbus or Industrial Ethernet protocols.

TURCK BL67 I/O and Base modules

The separation between electronic and base module for connectivity allows to complete the device with a choice through a full digital or analogue **I/O modules** range populating the **base module** existing with a multiple choice of electrical connection (M8, M12, M23)

The complete resulting configuration can handle :

- Up to 32 electrical modules (up to 2 in the Valve Driver Module)
- Up to 512 digital I/O (up to 32 outputs in the Valve Driver Module)
- Up to 128 analog I/O

Other TURCK BL67 Electronic modules

Other electronic modules, as CANopen gateway alowing a sub-network connectivity with other CANopen slaves, RFID System or counting modules complet the full TURCK BL67 Remote I/O System.

Valve driver Module for 16 or 32 Outputs

Modularity up to 16 or 32 Outputs :
Thanks to its modularity, the H Series Micro Valve Driver Module to Turck BL67 Remote I/O System adaptor can be configure up to either a 16 or 32 solenoid valves configuration :

For a light configuration up to 16 solenoid valves (2 double address or 4 single address manifolds), the Valve Driver Module can be optimized being populated with:

- 1 Standard Turck 16 DO module BL67-16DO-0.1A-P in slot 1
- 1 blank module BL67-E in slot 2

For a full configuration up to 32 solenoid valves (4 double address or 8 single address manifolds), the Valve Driver Module must be fully populated with 1 Standard Turck 16 DO module BL67-16DO-0.1A-P in each slot.

Tel: +45 63 12 83 00 | Email: ps@hymatik.com | www.hymatik.com | Hvidkaervej 27a, DK-5250 Odense SV, Denmark

H Series Industrial Communication modules



A choice of different protocols to connect the Isysnet device to the requested industrial network :

- DeviceNet
- Profibus DP
- ControlNet
- Ethernet I/P

Digital and Analogue I/O modules :



Application always needs a wide sensor quantity, diversity and additional electric actuators as well, with an appropirate electrical connection.
With a modularity from 2 to 16 chanels, the wide range of digital or analogue inputs and outputs modules offers a choice of industrial connection :

- M8 -3 PINs
- M12 -5 PINs
- M23 - 12 PINs

Extension power supply module :



The auxiliary power from the communication module supports up to 10 I/O modules. For applications requiring a larger I/O module quantity, this 24VDC extension power module extends the backplane bus power to support up to 10 more I/O modules.

Also, when safety recommendations require multiple permanent and safety power supplies, this 24VDC extension power module avoids the need for a separate power supply section in the H Series Industrial Communication device.

H Series Industrial Communication and H Series Micro Valve bus extender cable



An H Series Industrial Communication device can be split into the H Series Industrial Communication section or, from an H Series Micro valve manifold to an extended section.
Both cables avoide the backplane Bus power and communication.

The H Series Industrial Communication device has to be closed with a 32 output driver (internally ending the backplane bus) or using the terminating base module

Tel: +45 63 12 83 00 | Email: ps@hymatik.com | www.hymatik.com | Hvidkaervej 27a, DK-5250 Odense SV, Denmark

32 Outputs driver for valve islands in centralised applications

32 Outputs driver for H Series Micro Valve Islands



- H Series Micro valve nominal flow up to 280 Nl/mn
- 32 outputs per module to handle up to 32 solenoids per valve island
- Up to 4 valve islands linked through the internal sub-network for a total of 128 solenoids per device
- With or without additional user power supply
- With or without bus extender

32 Outputs driver for H Series ISO Valve Islands



ISO 15407-2



ISO 5599-2

- ISO 15407-2 Size 02 (HB) 18 mm 380 Nl/mn
- ISO 15407-2 Size 01 (HA) 26 mm 590 Nl/mn
- ISO 5599-2 Size 1 (H1) 42 mm 1030 Nl/mn
- 32 outputs per module to handle up to 32 solenoids per valve island.

Moduflex fieldbus modules for valve islands in decentralised applications

Moduflex fieldbus adaptor for H Series Micro and H Series ISO valve islands



Moduflex valve system



H Series Micro Valves



ISO 15407-2
HA - HB



ISO 5599-2
H1

- Compatible with all Moduflex fieldbus protocol modules handling up to 16 solenoids:
  - DeviceNet
  - CANopen
  - Profibus DP
  - InterBus-S
  - AS-i standard and extended a-b coding versions.

Tel: +45 63 12 83 00 | Email: ps@hymatik.com | www.hymatik.com | Hvidkaervej 27a, DK-5250 Odense SV, Denmark

TURCK BL67 H Series Industrial Communication modules





- A choice of different protocols to connect the TURCK BL67 device to the requested industrial network:
  - CANopen
  - DeviceNet
  - Profibus DP
  - Ethernet Modbus TCP, EtherNet/IP™ and PROFINET

Programmable versions CODESYS

TURCK BL67 Electronic and Base Modules





The separation between electronic and base module for connectivity allows to complete the device with a choice through a full digital or analogue **I/O modules** range populating the **base module** existing with a multiple choice of electrical connection (M8, M12, M23)

The complete resulting configuration can handle :

- Up to 32 electrical modules (up to 2 in the Valve Driver Module)
- Up to 512 digital I/O (up to 32 outputs in the Valve Driver Module)
- Up to 128 analog I/O

32 Outputs Driver for H Series Micro and H Series ISO Valve Islands



H Series Micro Valves



ISO 15407-2
HA & HB



ISO 15407-2
H1 to H3

- H Series Micro 4 valve function in 42 mm 280 Nl/mn
- ISO 15407-2 Size 02 (HB) 18 mm 390 Nl/mn
- ISO 15407-2 Size 01 (HA) 26 mm 920 Nl/mn
- ISO 5599-2 Size 1 (H1) 42 mm 1200 Nl/mn
- ISO 5599-2 Size 2 (H2) 56 mm 2500 Nl/mn
- ISO 5599-2 Size 3 (H3) 71 mm 5000 Nl/mn
- Modularity of 16 or 32 outputs per module to handle up to 32 solenoids per valve island.

Tel: +45 63 12 83 00 | Email: ps@hymatik.com | www.hymatik.com | Hvidkaervej 27a, DK-5250 Odense SV, Denmark

DeviceNet communication module

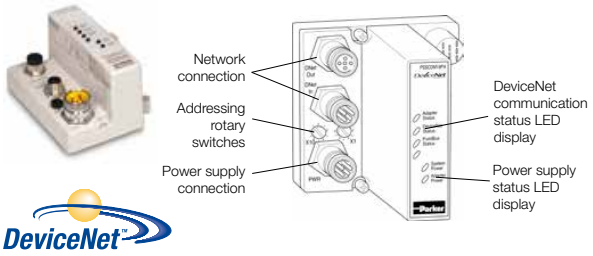

DeviceNet Adapters	
DeviceNet module order code	
PSSCDM12A	**PSSCDM18PA**
Adapters connection	
Power supply connection 7/8" - 4 PINs - Male : 	- PIN 1 : User power + - PIN 2 : Adapter power + - PIN 3 : Adapter power - - PIN 4 : User power -
Bus IN connection	
M12 - 5 PINs - Male - A coding 	M18 - 5 PINs - Male : 
- PIN 1 : Drain - PIN 2 : DeviceNet V+ - PIN 3 : DeviceNet V- - PIN 4 : CAN High - PIN 5 : CAN Low	
Bus OUT connection	
M12 - 5 PINs - Female - A coding 	M18 - 5 PINs - Female : 
- PIN 1 : Drain - PIN 2 : V+ - PIN 3 : V- - PIN 4 : CAN High - PIN 5 : CAN Low	
LED display 1 - Adapter status : green/red 2 - DeviceNet status : green/red 3 - Status : green/red 4 - System power (5V power) : green 5 - Adapter power (24V from field supply) : green	

Profibus DP communication module

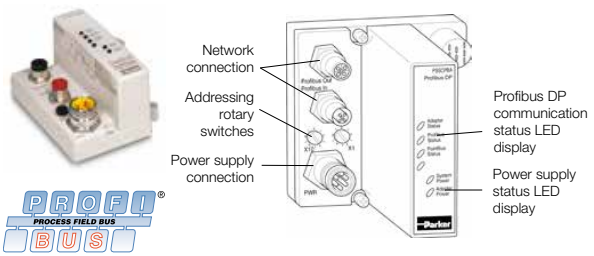

Profibus DP Adapters	
Profibus DP module order code	
PSSCPBA	
Adapters connection	
Power supply connection 7/8" - 5 PINs - Male : 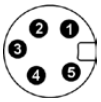	- PIN 1 : User power + - PIN 2 : Adapter power + - PIN 3 : Protective GND - PIN 4 : Adapter power - - PIN 5 : User power -
Bus IN connection	
M12 - 5 PINs - Male - B coding 	- PIN 1 : + 5 VDC Bus - PIN 2 : A - Line - PIN 3 : GND Bus - PIN 4 : B - Line - PIN 5 : Shield
Bus OUT connection	
M12 - 5 PINs - Female - B coding 	- PIN 1 : + 5 VDC Bus - PIN 2 : A - Line - PIN 3 : GND Bus - PIN 4 : B - Line - PIN 5 : Shield
LED display 1 - Adapter status : green/red 2 - Profibus DP status : green/red 3 - Bus status : green/red 4 - System power (5V power) : green 5 - Adapter power (24V from field supply) : green	

DeviceNet communication module connection accessories


P8CS1205BA

Description	Connector type	W (g)	Order code
Power supply connector	7/8" - 4 PINs	40	**P8CS7804AA**
Bus IN connector	M12 female - A coding	25	**P8CS1205AA**
Bus OUT connector	M12 male - A coding	25	**P8CS1205BA**
Line terminaiton	M12 male - A coding	25	**P8BPA00MA**

Profibus DP communication module connection accessories


P8CS1205BB

Description	Connector type	W (g)	Order code
Power supply connector	7/8" - 5 PINs	40	**P8CS7805AA**
Bus IN connector	M12 female - B coding	25	**P8CS1205AB**
Bus OUT connector	M12 male - B coding	25	**P8CS1205BB**
Line terminaiton	M12 male - B coding	25	**P8BPA00MB**

ControlNet communication module

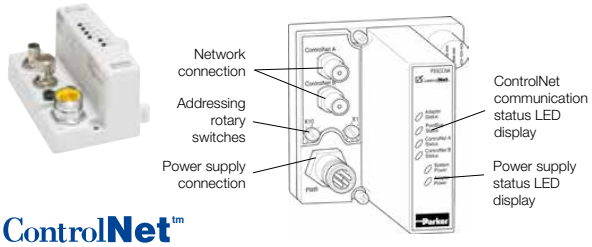

ControlNet™

ControlNet Adapters	
ControlNet module order code	
PSSCCNA	
Adapters connection	
Power supply connection 7/8" - 4 PINs - Male : 	- PIN 1 : User power + - PIN 2 : Adapter power + - PIN 3 : Adapter power - - PIN 4 : User power -
ControlNet IN connection	TNC style connector
ControlNet OUT connection	TNC style connector
LED display 1 - Adapter status : green/red 2 - Bus status : green/red 3 - ControNet A status : green/red 4 - ControNet B status : green/red 5 - System power (Bus 5V power) : green 6 - Adapter power (24V from field supply) : green	

Ethernet I/P communication module

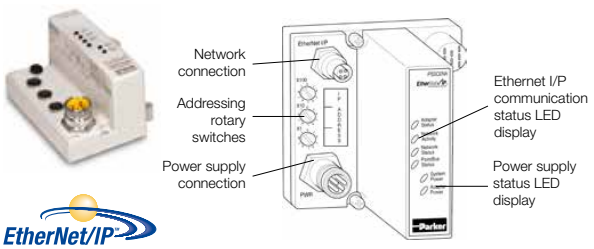

EtherNet/IP

Ethernet I/P Adapters	
Ethernet I/P module order code	
PSSCENA	
Adapters connection	
Power supply connection 7/8" - 4 PINs - Male : 	- PIN 1 : User power + - PIN 2 : Adapter power + - PIN 3 : Adapter power - - PIN 4 : User power -
Ethernet I/P connection	
M12 - 4 PINs - Female - D coding : 	- PIN 1 : Tx + - PIN 2 : Rx + - PIN 3 : Tx - - PIN 4 : Rx -
LED display 1 - Adapter status : green/red 2 - Network activity : green 3 - Network status : green/red 4 - Bus status : green/red 5 - System power (Bus 5V power) : green 6 - Adapter power (24V from field supply) : green	

ControlNet communication module connection accessories


P8CS7804AA

Description	Connector type	W (g)	**Order code**
Power supply connector	7/8" - 4 PINs	40	**P8CS7804AA**

Ethernet I/P communication module connection accessories


P8CS7804AA

Description	Connector type	W (g)	**Order code**
Power supply connector	7/8" - 4 PINs	40	**P8CS7804AA**

Tel: +45 63 12 83 00 | Email: ps@hymatik.com | www.hymatik.com | Hvidkaervej 27a, DK-5250 Odense SV, Denmark

Digital Input modules

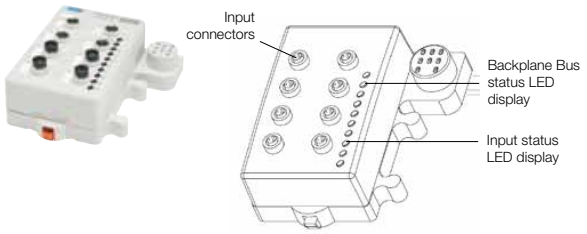

Digital DC Input modules		
Input module order code		
PSSN8M8A	**PSSN8M12A**	**PSSP8M12A**
		
Nb of Inputs		
8	8	8
Nb of Input connectors		
8 x M8	4 x M12	4 x M12
Input density/connector		
1	2	2
Sensor polarity		
PNP	PNP	NPN
Input module connection		
Input connector		
M8 - 3 PINs Female  - PIN 1 : + 24 VDC - PIN 3 : Common - PIN 4 : Input	M12 - 5 PINs Female  - PIN 1 : + 24 VDC - PIN 2 : Odd input (1, 3, 5, 7) - PIN 3 : Common - PIN 4 : Even input (0, 2, 4, 6) - PIN 5 : n/a	
Input status LED display (Logic side)		
8 x Yellow / Red		
Backplane Bus status LED display (Logic side)		
Module status : 1 x green / red Network status : 1 x green / red		

Digital Output modules

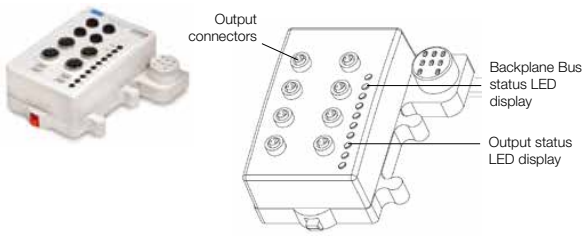

Digital DC Output modules			
Output module order code			
PSST8M8A	**PSST8M12A**	**PSST8M23A**	**PSSTR4M12A**
			
Nb of Outputs			
8	8	8	8
Nb of Output connectors			
8 x M8	4 x M12	1 x M23	4 x M12
Output density/connector			
1	2	8	1
Output module connection			
Output connector			
M8 - 3 PINs Female  - PIN 1 : + 24 VDC - PIN 3 : Common - PIN 4 : Outputs (0 to 7)	M12 - 5 PINs Female  - PIN 1 : + 24 VDC PIN 2 : Odd output (1, 3, 5, 7) - PIN 3 : Common PIN 4 : Even output (0, 2, 4, 6) - PIN 5 : n/a	M23 - 12 PINs Female  - PIN 1 : Output 0 - PIN 2 : Output 1 - PIN 3 : Output 2 - PIN 4 : Output 3 - PIN 5 : Output 4 - PIN 6 : Output 5 - PIN 7 : Output 6 - PIN 8 : Output 7 - PIN 9 : Return (common) - PIN 10 : Return (common) - PIN 11 : +24 VDC - PIN 12 : Chassis	M12 - 5 PINs Female  - PIN 1 : +24 VDC - PIN 2 : Odd outputs - PIN 3 : Common - PIN 4 : Even outputs - PIN 5 : n/a
Output status LED display (Logic side)			
8 x Yellow / Red			4 x Yellow/Red
Backplane Bus status LED display (Logic side)			
Module status : 1 x green / red Network status : 1 x green / red			

Backplane Bus accessories




Description	Cable length	W (g)	Order code
Backplane Bus extender	1 meter	380	**PSSEXT1**
	3 meter	760	**PSSEXT3**
Termination module		200	**PSSTERM**

Connectors for outputs


P8CS0803J

P8CSY1212A

Description	Connector type	W (g)	Order code
Cable quick connect connector	M8 male	25	**P8CS0803J**
	M12 male - A coding	25	**P8CS1204J**
Y shape	M12 male - 2 x M12 female	25	**P8CSY1212A**

Backplane Bus accessories




Description	Cable length	W (g)	Order code
Backplane Bus extender	1 meter	380	**PSSEXT1**
	3 meter	760	**PSSEXT3**
Termination module		200	**PSSTERM**

Connectors for outputs


P8CS0803J

P8CSY1212A

Description	Connector type	W (g)	Order code
Cable quick connect connector	M8 male	25	**P8CS0803J**
	M12 male - A coding	25	**P8CS1204J**
Y shape	M12 male - 2 x M12 female	25	**P8CSY1212A**

Analogue Input modules

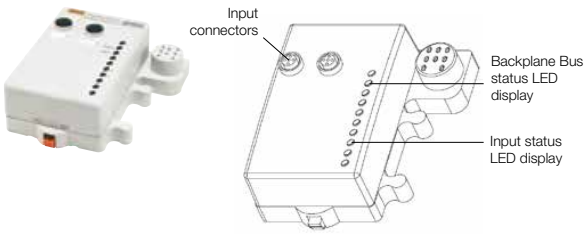

Analogue Input modules		
Input module order code	**PSSNAVM12A**	**PSSNACM12A**
		
Nb of Inputs	2	2
Nb of Input connectors	2 x M12	2 x M12
Input density/connector	1	1
Input signal	0 - 10 V	4 - 20 mA
Analogue Input module connection		
Input connector	M12 - 5 PINs - Female 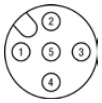 - PIN 1 : +24 VDC - PIN 2 : Inputs - PIN 3 : Common - PIN 4 : Common - PIN 5 : n/a	
Input status LED display (Logic side)	2 x green / red	
Backplane Bus status LED display (Logic side)	Module status : 1 x green / red Network status : 1 x green / red	

Backplane Bus accessories



Description	Cable length	W (g)	Order code
Backplane Bus extender	1 meter	380	**PSSEXT1**
	3 meter	760	**PSSEXT3**
Termination module		200	**PSSTERM**

Connectors for inputs



Description	Connector type	W (g)	Order code
Staight connector	M12 male - A coding	25	**P8CS1205BA**

Analogue Output modules

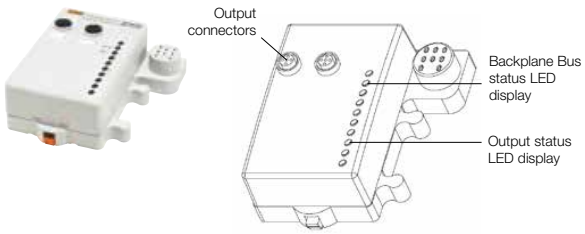

Analogue Output modules		
Output module order code	**PSSTAVM12A**	**PSSTACM12A**
		
Nb of Outputs	2	2
Nb of Output connectors	2 x M12	2 x M12
Output density/connector	1	1
Output signal	0 - 10 V	4 - 20 mA
Analogue Output module connection		
Output connector	M12 - 5 PINs - Female 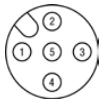 - PIN 1 : Outputs - PIN 2 : +24 VDC - PIN 3 : Common - PIN 4 : Common - PIN 5 : n/a	
Output status LED display (Logic side)	2 x green / red	
Backplane Bus status LED display (Logic side)	Module status : 1 x green / red Network status : 1 x green / red	

Backplane Bus accessories



Description	Cable length	W (g)	Order code
Backplane Bus extender	1 meter	380	**PSSEXT1**
	3 meter	760	**PSSEXT3**
Termination module		200	**PSSTERM**

Connectors for outputs



Description	Connector type	W (g)	Order code
Staight connector	M12 male - A coding	25	**P8CS1205BA**

32 Output drivers



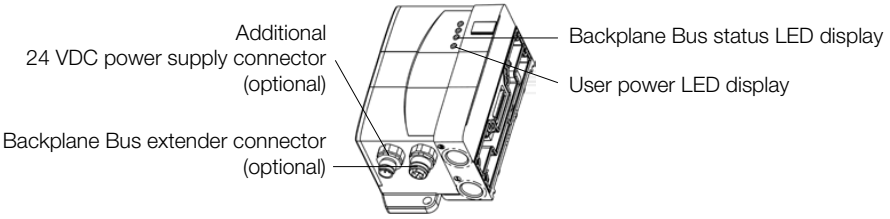

32 Output driver modules

Dedicated valve range		H Series Micro Valves				H Series ISO 15407-2	H Series ISO 5599-2
32 Output driver modules order code	Side ported	**PSML61AP**	**PSMM61AP**	**PSMM71AP**	**PSMM51AP**	**PS5620L61P**	**PS4020L61CP**
	Bottom ported	**PSML62AP**	**PSMM62AP**	**PSMM72AP**	**PSMM52AP**	-	-
							
Pneumatic port sizes	Power supply	G3/8"					
	Exhaust	G3/8"					
Pneumatic pilot port sizes	Power supply	Internal or M7				Internal	
	Exhaust	G1/8"				Internal	
32 Output driver module connection							
24 VDC power supply connector		NO	YES M12 - 5 PINs - Male - PIN 1 : +24 VDC - PIN 2 : n/a - PIN 3 : Common - PIN 4 : n/a - PIN 5 : Protective Earth	YES	NO	NO	NO
Backplane Bus Extender connector		NO	NO	YES M12 - 5 PINs - Female To use with PSSVEXT1 - PIN 1 : CAN SHLD - PIN 2 : CAN V+ - PIN 3 : CAN GND - PIN 4 : CAN High - PIN 5 : CAN Low	YES	NO	NO
Backplane Bus status LED display (Logic side)		Backplane Bus power supply : 1 x green / red Backplane Bus status : 1 x green / red Output fault : 1 x red Valve power supply : 1 x green				Module status : 1 x green / red Backplane Bus status : 1 x green/red Output fault : 1 x yellow / red	

Backplane Bus and Solenoid Valves Power Supply Sourcing :

H Series Micro 32 output driver modules

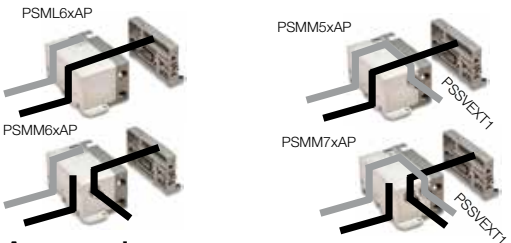

H Series ISO 32 output driver modules



Backplane Bus power supply
Solenoid Valves power supply

For further details on Multiple Power supply, see at end of this section.

Accessories

	Description	Connector type	W (g)	Order code
	Backplane Bus extension cable with 1 meter cable	M12 male - A coding Head plate	380	**PSSVEXT1**
 P8CS1205AA	Connector for 24 VDC power supply connector	M12 Female - A coding	25	**P8CS1205AA**
	Line termination	M12 Male - A coding	25	**P8BPA00MA**

Parker Hannifin Corporation
Pneumatic Division - Europe

Tel: +45 63 12 83 00 | Email: ps@hymatik.com | www.hymatik.com | Hvidkaervej 27a, DK-5250 Odense SV, Denmark

Power Extender module

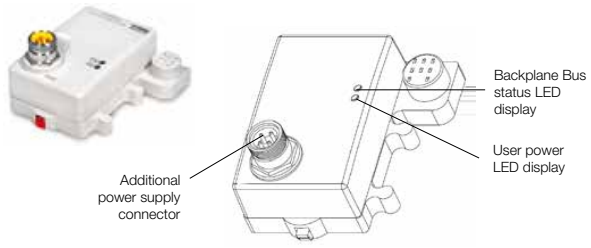

Backplane Bus Extension Power Supply module	
Power Supply Extender module order code	**PSSE24A**
	
Extender module connection	
Power supply connection	7/8" - 4 PINs - Male  - PIN 1 : User power + - PIN 2 : Backplane bus power + - PIN 3 : Backplane bus power + - PIN 4 : User power -
Status LED display (Logic side) 1 x green	Field power status : 1 x green 5 VDC system power status:

Backplane Bus connector


P8CS7804AA

Description	Connector type	W (g)	Order code
Power supply connector	7/8" - 4 PINs	40	**P8CS7804AA**

Backplane Bus accessories



Description	Cable length	W (g)	Order code
Backplane Bus extender from Industrial communication module	1 meter	380	**PSSEXT1**
	3 meter	760	**PSSEXT3**
Backplane Bus extender cable from 32 outputs driver	1 meter	380	**PSSVEXT1**

AS-interface communication module

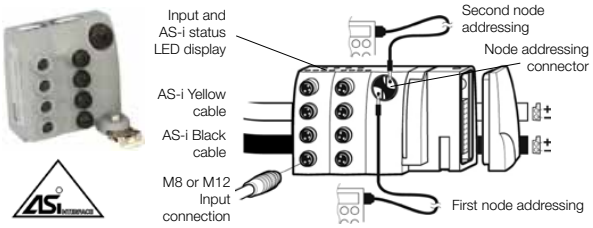

AS-i Adapters							
P2M2HBVA 10400	**P2M2HBVA 10800**	**P2M2HBVA 20600**	**P2M2HBVA 10808A**	**P2M2HBVA 20608A**	**P2M2HBVA 10404B**	**P2M2HBVA 10404B**	**P2M2HBVA 20608B**
							
AS-i Version							
V2.0	V2.0	V2.1	V2.0	V2.1	V2.0	V2.0	V2.1
Number of addresses							
1 / 31	2 / 31	2 / 31a + 31b	2 / 31	2 / 31a + 31b	1 / 31	2 / 31	2 / 31a +31b
Nb of outputs for solenoid valves							
4	8	6	8	8	4	8	6
Nb of Inputs							
-			8	8	4	8	8
Nb of Input connectors							
-			8 x M8	8 x M8	4 x M12	4 x M12	4 x M12
Input density / connector							
-			1	1	1	2	2
Adapter connection							
Yellow cable							
Bus signal Bus module and sensors power supply							
Black cable							
24 VDC outputs for solenoid valves							
INPUTS connection			M8 - 3 Pins - Female		M12 - 5 PIns Female		
							
			- PIN 1 : +24 VDC - PIN 3 : Common - PIN 4 : Input		PIN 1: +24 VDC PIN 2*: Input 2 & 3 PIN 3: Common PIN 4: Input 0 to 3 PIN 5: n/a *on left connectors only		PIN 1: +24 VDC PIN 2*: Odd Input PIN 3: Common PIN 4: Even Input PIN 5: n/a
LED Display							
Node status : 2 x green/red per node Input status : 4 x yellow per node Valve power (24V from field supply) : 1 x green / red							

Valve range adapters


PSMM41AP

Description	Valve range		W (g)	Order code
Moduflex Bus adapter without communication module	Moduflex Valve		30	**P2M2HEV0B**
	H Series	Side ported	200	**PSMM41AP**
	Micro Valve	Bottom ported	200	**PSMM42AP**
	ISO 15407-2-HA-HB		200	**PS5620M41P**
	ISO 5599-2 - H1		300	**PS4020M41CP**

Connectors for Inputs


P8CS0803J

P8CSY1212A

Description	Valve range	W (g)	Order code
Cable quick connect connector	M8 Male	25	**P8CS0803J**
	M12 Male - A coding	25	**P8CS1204J**
"Y" shape	M12 Male - 2 x M12 Female	25	**P8CSY1212A**
Addressing cable	M12 Male - Jack	100	**P8LS12JACK**

Tel: +45 63 12 83 00 | Email: ps@hymatik.com | www.hymatik.com | Hvidkaervej 27a, DK-5250 Odense SV, Denmark

DeviceNet 16 outputs communication module



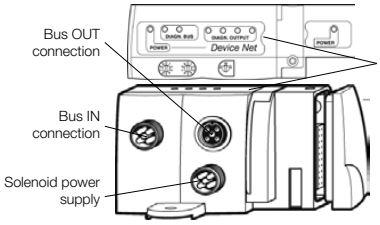

DeviceNet

DeviceNet Adapters		
Moduflex Valve System		**H Series Micro**
P2M2HBVD11600	**P2M2HBVD21600**	**Side ported : PSMMD1AP** **Bottom ported : PSMMD2AP**
		

Adapter connection

Power supply connection

M12 - 5 PINs
Male - B coding



- PIN 1 : n/a
- PIN 2 : n/a
- PIN 3 : 0 VDC Solenoid
- PIN 4 : 24 VDC Solenoid
- PIN 5 : Protected earth (PE)

M12 - 5 PINs
Male - A coding



- PIN 1 : n/a
- PIN 2 : n/a
- PIN 3 : 0 VDC Solenoid
- PIN 4 : 24 VDC Solenoid
- PIN 5 : Protected earth (PE)

Bus IN connection

M12 - 5 PINs - Male - A coding



- PIN 1 : Drain
- PIN 2 : CAN V+
- PIN 3 : CAN V-
- PIN 4 : CAN High
- PIN 5 : CAN Low)

Bus OUT connection

M12 - 5 PINs - Female - A coding



- PIN 1 : Drain
- PIN 2 : CAN V+
- PIN 3 : CAN V-
- PIN 4 : CAN High
- PIN 5 : CAN Low)

LED Display

Adapter power : 1 x green
DeviceNet status : 2 x green/red
Solenoid pilots power : 1 x green/red
Solenoid pilots diagnostic : 4 x red

Valve range adapters


PSMM41AP

Description	Valve range		W (g)	Order code
Moduflex Bus adapter without communication module	Moduflex Valve		30	**P2M2HEV0B**
	H Series	Side ported	200	**PSMM41AP**
	Micro valves	Bottom ported	200	**PSMM42AP**
	ISO 15407-2-HA-HB		200	**PS5620M41P**
	ISO 5599-2 - H1		300	**PS4020M41CP**

DeviceNet communication module connection accessories


P8CS1205BA

Description	Connector type	W (g)	Order code
Power supply connection	M12 Female - A coding	40	**P8CS1205AA**
	M12 Female - B coding	40	**P8CS1205AB**
Bus IN connector	M12 Female - A coding	25	**P8CS1205AA**
Bus OUT connector	M12 Male - A coding	25	**P8CS1205BA**
Line termination	M12 Male - A coding	25	**P8BPA00MA**

CANopen 16 outputs communication module



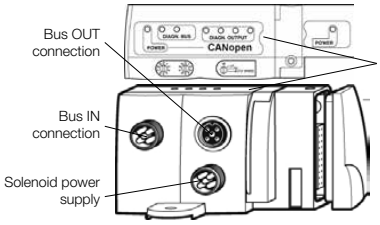

CANopen

CANopen Adapters		
Moduflex Valve System		**H Series Micro**
P2M2HBVC11600	**P2M2HBVC21600**	**Side ported : PSMMC1AP** **Bottom ported : PSMMC2AP**
		

Adapter connection

Power supply connection

M12 - 5 PINs
Male - B coding



- PIN 1 : n/a
- PIN 2 : n/a
- PIN 3 : 0 VDC Solenoid
- PIN 4 : 24 VDC Solenoid
- PIN 5 : Protected earth (PE)

M12 - 5 PINs
Male - A coding



- PIN 1 : n/a
- PIN 2 : n/a
- PIN 3 : 0 VDC Solenoid
- PIN 4 : 24 VDC Solenoid
- PIN 5 : Protected earth (PE)

Bus IN connection

M12 - 5 PINs - Male - A coding



- PIN 1 : Drain
- PIN 2 : CAN V+
- PIN 3 : CAN V-
- PIN 4 : CAN High
- PIN 5 : CAN Low)

Bus OUT connection

M12 - 5 PINs - Female - A coding



- PIN 1 : Drain
- PIN 2 : CAN V+
- PIN 3 : CAN V-
- PIN 4 : CAN High
- PIN 5 : CAN Low)

LED Display

Adapter power : 1 x green
CANopen status : 2 x green/red
Solenoid pilots power : 1 x green/red
Solenoid pilots diagnostic : 4 x red

Valve range adapters


PSMM41AP

Description	Valve range		W (g)	Order code
Moduflex Bus adapter without communication module	Moduflex Valve		30	**P2M2HEV0B**
	H Series	Side ported	200	**PSMM41AP**
	Micro valves	Bottom ported	200	**PSMM42AP**
	ISO 15407-2-HA-HB		200	**PS5620M41P**
	ISO 5599-2 - H1		300	**PS4020M41CP**

CANopen communication module connection accessories


P8CS1205BA

Description	Connector type	W (g)	Order code
Power supply connection	M12 Female - A coding	40	**P8CS1205AA**
	M12 Female - B coding	40	**P8CS1205AB**
Bus IN connector	M12 Female - A coding	25	**P8CS1205AA**
Bus OUT connector	M12 Male - A coding	25	**P8CS1205BA**
Line termination	M12 Male - A coding	25	**P8BPA00MA**

Tel: +45 63 12 83 00 | Email: ps@hymatik.com | www.hymatik.com | Hvidkaervej 27a, DK-5250 Odense SV, Denmark

Profibus DP 16 outputs communication module

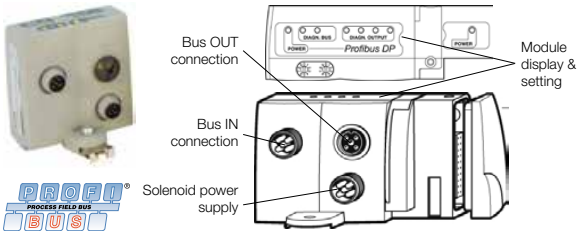

Profibus DP Adapters	
Moduflex Valve System	**H Series Micro Valves**
P2M2HBVC11600	**Side ported : PSMMC1AP** **Bottom ported : PSMMC2AP**
	
Adapter connection	
Power supply connection	
M12 - 5 PINs - Male - A coding  - PIN 1 : +24 VDC adapter - PIN 2 : n/a - PIN 3 : 0 VDC Adapter & Solenoids - PIN 4 : 24 VDC Solenoids - PIN 5 : Protected earth (PE)	
Bus IN connection	
M12 - 5 PINs - Male - B coding  - PIN 1 : +5 VDC Bus - PIN 2 : A - Line - PIN 3 : GND Bus - PIN 4 : B - Line - PIN 5 : Shield	
Bus OUT connection	
M12 - 5 PINs - Female - B coding  - PIN 1 : +5 VDC Bus - PIN 2 : A - Line - PIN 3 : GND Bus - PIN 4 : B - Line - PIN 5 : Shield	
LED Display	
Adapter power : 1 x green Profibus DP status : 2 x green/red Solenoid pilots power : 1 x green/red Solenoid pilots diagnostic : 4 x red	

Valve range adapters


PSMM41AP

Description	Valve range	W (g)	Order code
Moduflex Bus adapter without communication module	Moduflex Valve	30	**P2M2HEV0B**
	H Series Micro valves Side ported	200	**PSMM41AP**
	H Series Micro valves Bottom ported	200	**PSMM42AP**
	ISO 15407-2-HA-HB	200	**PS5620M41P**
	ISO 5599-2 - H1	300	**PS4020M41CP**

Profibus DP communication module connection accessories


P8CS1205BB

Description	Connector type	W (g)	Order code
Power supply connection	M12 Female - A coding	40	**P8CS1205AA**
Bus IN connector	M12 Female - B coding	25	**P8CS1205AB**
Bus OUT connector	M12 Male - B coding	25	**P8CS1205BB**
Line termination	M12 Male - B coding	25	**P8BPA00MB**

InterBus-S 16 outputs communication module

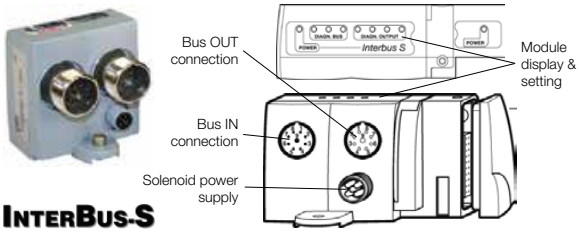

InterBus-S Adapters	
Moduflex Valve System	
P2M2HBVS11600	
	
Adapter connection	
Power supply connection	
M12 - 5 PINs - Male - A coding  - PIN 1 : +24 VDC adapter - PIN 2 : n/a - PIN 3 : 0 VDC Adapter & Solenoids - PIN 4 : 24 VDC Solenoids - PIN 5 : Protected earth (PE)	
Bus IN connection	
M23 - 9 PINs - Male  - PIN 1 : DO - PIN 2 : DO - PIN 3 : DI - PIN 4 : DI - PIN 5 : Ground - PIN 6 : n/a - PIN 7 : n/a - PIN 8 : n/a - PIN 9 : n/a	
Bus OUT connection	
M23 - 9 PINs - Female  - PIN 1 : DO - PIN 2 : DO - PIN 3 : DI - PIN 4 : DI - PIN 5 : Ground - PIN 6 : n/a - PIN 7 : n/a - PIN 8 : n/a - PIN 9 : RBST	
LED Display	
Adapter power : 1 x green InterBus S status : 2 x green/red Solenoid pilots power : 1 x green/red Solenoid pilots diagnostic : 4 x red	

Valve range adapters


PSMM41AP

Description	Valve range	W (g)	Order code
Moduflex Bus adapter without communication module	Moduflex Valve	30	**P2M2HEV0B**
	H Series Micro valves Side ported	200	**PSMM41AP**
	H Series Micro valves Bottom ported	200	**PSMM42AP**
	ISO 15407-2-HA-HB	200	**PS5620M41P**
	ISO 5599-2 - H1	300	**PS4020M41CP**

InterBus S communication module connection accessories


P8CS1205AA

Description	Connector type	W (g)	Order code
Power supply connection	M12 Female - A coding	40	**P8CS1205AA**

Tel: +45 63 12 83 00 | Email: ps@hymatik.com | www.hymatik.com | Hvidkaervej 27a, DK-5250 Odense SV, Denmark

TURCK BL67 Communication Gateway



Protocol	Network connection	Power Sup. Connection	Weight (g)	Order code
CANopen (Bus IN & OUT)	M12 - A coding	7/8" - 5 Pin's	375	**BL67-GW-CO**
DeviceNet™	7/8" - 5 Pin's	7/8" - 5 Pin's	360	**BL67-GW-DN**
Profibus-DP (DPV0/DPV1)	M12 - B coding	7/8" - 5 Pin's	370	**BL67-GW-DPV1**
Multiprotocol Ethernet: Modbus TCP, EtherNet/IP™ and PROFINET	M12 - D coding	7/8" - 5 Pin's	375	**BL67-GW-EN**

All TURCK BL67 System Modules can be ordered directly from TURCK under the same part number

TURCK BL67 Programmable CODESYS Communication Gateway



Protocol	Network connection	Power Sup. Connection	Weight (g)	Order code
Profibus-DP	M12 - B coding	7/8" - 5 Pin's	380	**BL67-PG-DP**
EtherNet/IP™	M12 - D coding	7/8" - 5 Pin's	375	**BL67-PG-EN-IP**
Modbus TCP	M12 - D coding	7/8" - 5 Pin's	375	**BL67-PG-EN**

All TURCK BL67 System Modules can be ordered directly from TURCK under the same part number

TURCK BL67 Electronic Modules



Decription	Characteristic	Polarity	Weight (g)	Order code
Blank module			15	**BL67-E**
4 Digital Inputs		PNP	55	**BL67-4DI-P**
		NPN	55	**BL67-4DI-N**
	Channel diagnostics	PNP	55	**BL67-4DI-PD**
8 Digital Inputs		PNP	55	**BL67-8DI-P**
		NPN	55	**BL67-8DI-N**
	Channel diagnostics	PNP	55	**BL67-8DI-PD**
16 Digital Inputs		PNP	55	**BL67-16DI-P**
4 Digital Ouputs	0.5 A	PNP	55	**BL67-4DO-0.5A-P**
	2.0 A	PNP	55	**BL67-4DO-2A-P**
		NPN	55	**BL67-4DO-2A-N**
	4.0 A	PNP	55	**BL67-4DO-4A-P**
8 Digital Ouputs	0.5 A	PNP	55	**BL67-8DO-0.5A-P**
		NPN	55	**BL67-8DO-0.5A-N**
16 Digital Ouputs	0.1 A	PNP	55	**BL67-16DO-0.1A-P**
4 Digital Inputs & Ouputs	0.5 A - Channel Diagnostic	PNP	55	**BL67-4DI4DO-PD**
8 Configurable Digital Channels	0.5 A	PNP	55	**BL67-8XSG-P**
	0.5 A - Channel Diagnostics	PNP	55	**BL67-8XSG-PD**
8 Isolated Relay Ouputs	Normally open		55	**BL67-8DO-R-NO**
2 analogue Inputs	16 bit resolution	Current	55	**BL67-2AI-I**
		Voltage	55	**BL67-2AI-V**
	For Pt and Ni sensors		55	**BL67-2AI-PT**
	For thermoelements		55	**BL67-2AI-TC**
4 analogue Inputs	16 bit resolution	Current / Voltage	55	**BL67-4AI-V/I**
	For thermoelements		55	**BL67-4AI-TC**
2 analogue Outputs	16 bit resolution	Current	55	**BL67-2AO-I**
		Voltage	55	**BL67-2AO-V**
4 analogue Outputs	16 bit resolution	Voltage	55	**BL67-4AO-V**

All TURCK BL67 System Modules can be ordered directly from TURCK under the same part number

The complete TURCK BL67 Remote I/O System range on http://www.turck/com and http:// www.parker,com/pneu/fieldbus

Tel: +45 63 12 83 00 | Email: ps@hymatik.com | www.hymatik.com | Hvidkaervej 27a, DK-5250 Odense SV, Denmark

TURCK BL67 Base modules for Digital and Analog I/O Modules



Description	Connector Type	Con. Number	Weight (g)	Order code
Base Modules	M8, 3-pole, female	4	160	**BL67-B-4M8**
		8	215	**BL67-B-8M8**
	M8, 4-pole, female	8	215	**BL67-B-8M8-4**
	M12, 5-pole, female, A-coded	2	185	**BL67-B-2M12**
	M12, 5-pole, female, A-coded, paired	2	185	**BL67-B-2M12-P**
	M12, 5-pole, female, A-coded	4	245	**BL67-B-4M12**
	M12, 5-pole, female, A-coded, paired	4	245	**BL67-B-4M12-P**
	M23, 12-pole, female	1	190	**BL67-B-1M23**
	M23, 19-pole, female	1	190	**BL67-B-1M23-19**

All TURCK BL67 System Modules can be ordered directly from TURCK under the same part number

Electronic and Base Module Combinations

	BL67-B-4M8	BL67-B-8M8	BL67-B-2M12	BL67-B-2M12-P	BL67-B-4M12	BL67-B-4M12-P	BL67-B-1M23	BL67-B-1M23-19	BL67-B-8M8-4
Digital Input Modules									
BL67-4DI-P	✓		✓	✓	✓		✓		
BL67-4DI-N	✓		✓	✓	✓		✓		
BL67-4DI-PD	✓		✓	✓	✓				
BL67-8DI-P		✓			✓	✓	✓		
BL67-8DI-N		✓			✓	✓	✓		
BL67-8DI-PD		✓			✓	✓			
BL67-16DI-P								✓	✓
Digital Output Modules									
BL67-4DO-0.5A-P	✓		✓	✓	✓		✓		
BL67-4DO-2A-P	✓		✓	✓	✓		✓		
BL67-4DO-2A-N	✓		✓	✓	✓		✓		
BL67-4DO-4A-P	✓		✓	✓	✓		✓		
BL67-8DO-0.5A-P		✓			✓	✓	✓		
BL67-8DO-0.5A-N		✓			✓	✓	✓		
BL67-16DO-0.1A-P								✓	✓
BL67-4DI4DO-PD		✓			✓	✓			
Configurable Digital Input/Output Modules									
BL67-8XSG-P		✓			✓	✓			
BL67-8XSG-PD		✓			✓	✓			
Relay Output Module									
BL67-8DO-R-NO						✓			
Analogue Input Module									
BL67-2AI-I			✓						
BL67-2AI-V			✓						
BL67-2AI-PT			✓						
BL67-2AI-TC			✓						
BL67-4AI-V/I					✓				
BL67-4AI-TC					✓				
Analogue Output Module									
BL67-2AO-I			✓						
BL67-2AO-V			✓						
BL67-4AO-V					✓				

The complete TURCK BL67 Remote I/O System range on http://www.turck/com

Tel: +45 63 12 83 00 | Email: ps@hymatik.com | www.hymatik.com | Hvidkaervej 27a, DK-5250 Odense SV, Denmark

TURCK BL67 Power Feeding and Base Modules



Description	Connector Type		Weight (g)	Order code
Power Feeding Module for 24 VDC additional sourcing			55	**BL67-PF-24VDC**
Base Modules	1 x 7/8", 5-pole, male	VI / VO Sourcing	55	**BL67-B-1RSM**
		VO Sourcing	55	**BL67-B-1RSM-VO**
	1 x 7/8", 4-pole, male		55	**BL67-B-1RSM-4**

All TURCK BL67 System Modules can be ordered directly from TURCK under the same part number

Power Feeding Base Modules Connection

Standard version

BL67-B-1RSM

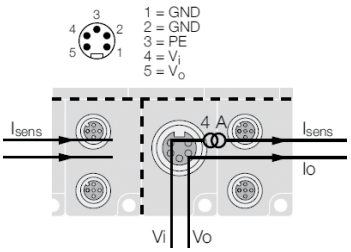

Other possible versions

BL67-B-1RSM-VO

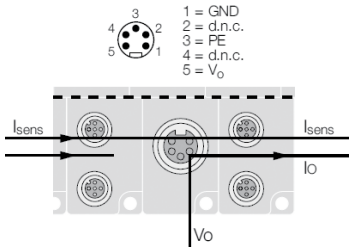

BL67-B-1RSM-4

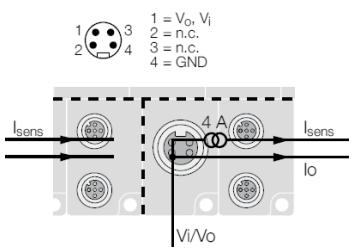

TURCK BL67 CANopen Gateway and Base Module



Description	Connector Type	Weight (g)	Order code
CANopen Gateway Module for CANopen Valve Island Interface		55	**BL67-1CVI**
Base Modules	1 x M12, 5-pole, female, A-coded	170	**BL67-B-1M12**

All TURCK BL67 System Modules can be ordered directly from TURCK under the same part number



BL67-1CVI electronic module with BL67-B-1M12

- Offering a CANopen Sub-Network connectivity up to 8 CANopen slaves

The complete TURCK BL67 Remote I/O System range on http://www.turck/com

H Series ISO 15407-2 & 5599-2 Sizes 02 to 3 with H Series Industrial Communication Fieldbus System

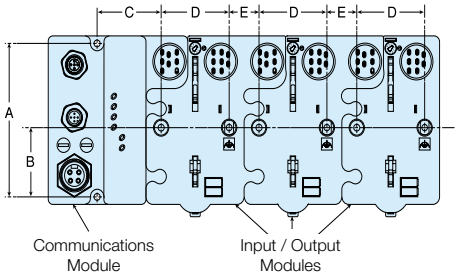

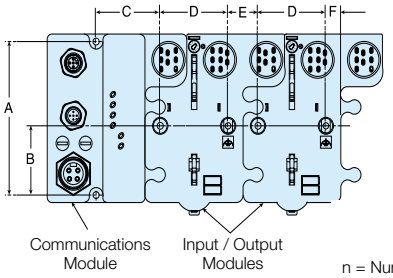

n = Number of 18mm HB bases
N1 = Number of 26mm HA bases
W = Width of 18mm HB bases
W1 - Width of 26mm HA bases

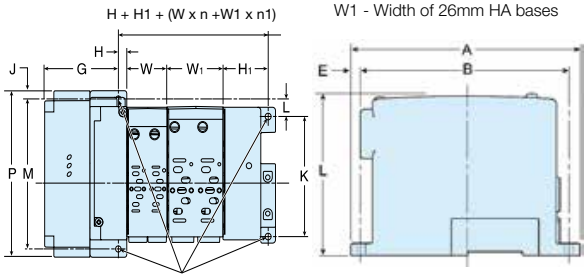

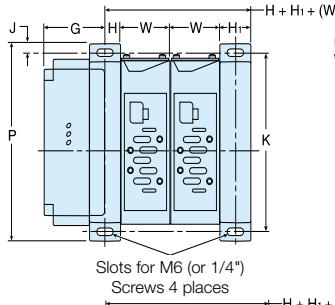

n = Number of H1 bases
W = Width of H1 bases

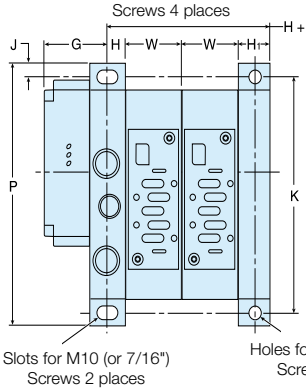

n = Number of H2 / H3 bases
W = Width of H2 / H3 bases

HA / HB Dimensions

	A	B	C	D	E	F
HA/HB	102	46	48	51	22	11

	A	B	E	L	G	H	H1
HA/HB	152	137	7,5	106	68	8,4	45,8
	J	**K**	**L**	**M**	**P**	**W**	**W1**
HA/HB	4	110	16	137	152	40,8	56,8

	G	H	H1	J	K	P	W
H1	56	15,9	15,9	8,5	165	182	49
H2	58	18	15	12	215	239	56
H3	64	24	16,5	15	265	295	71

Tel: +45 63 12 83 00 | Email: ps@hymatik.com | www.hymatik.com | Hvidkaervej 27a, DK-5250 Odense SV, Denmark

H Series Industrial Communication with H Series Micro Valves

Side ported

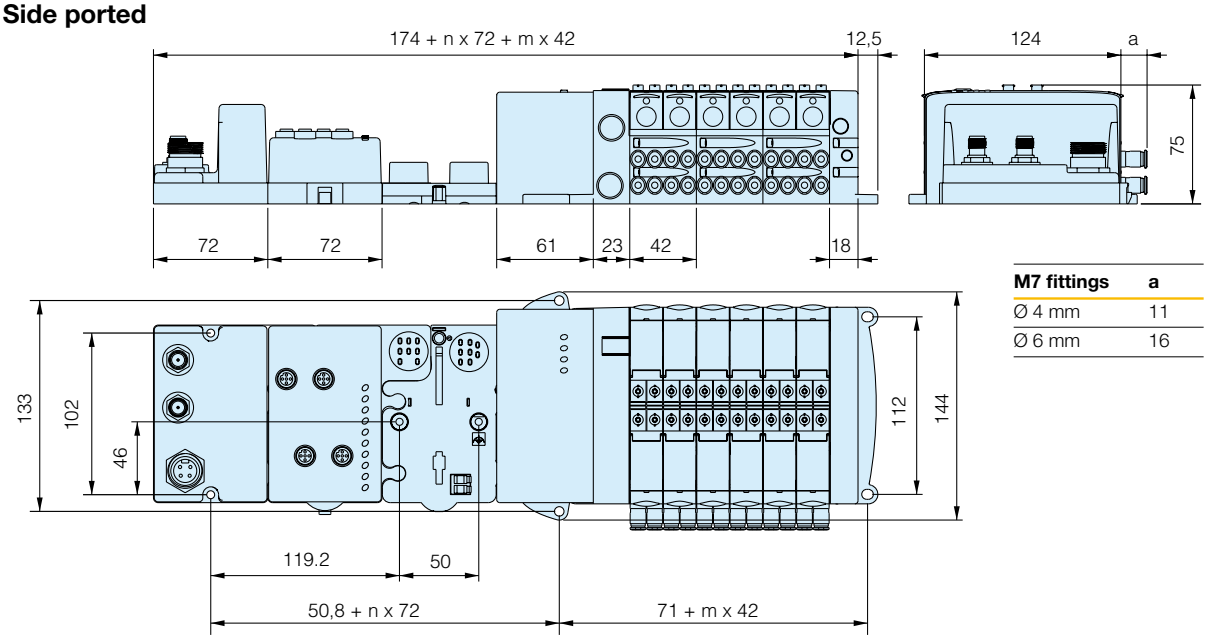

M7 fittings	a
Ø 4 mm	11
Ø 6 mm	16

Bottom ported

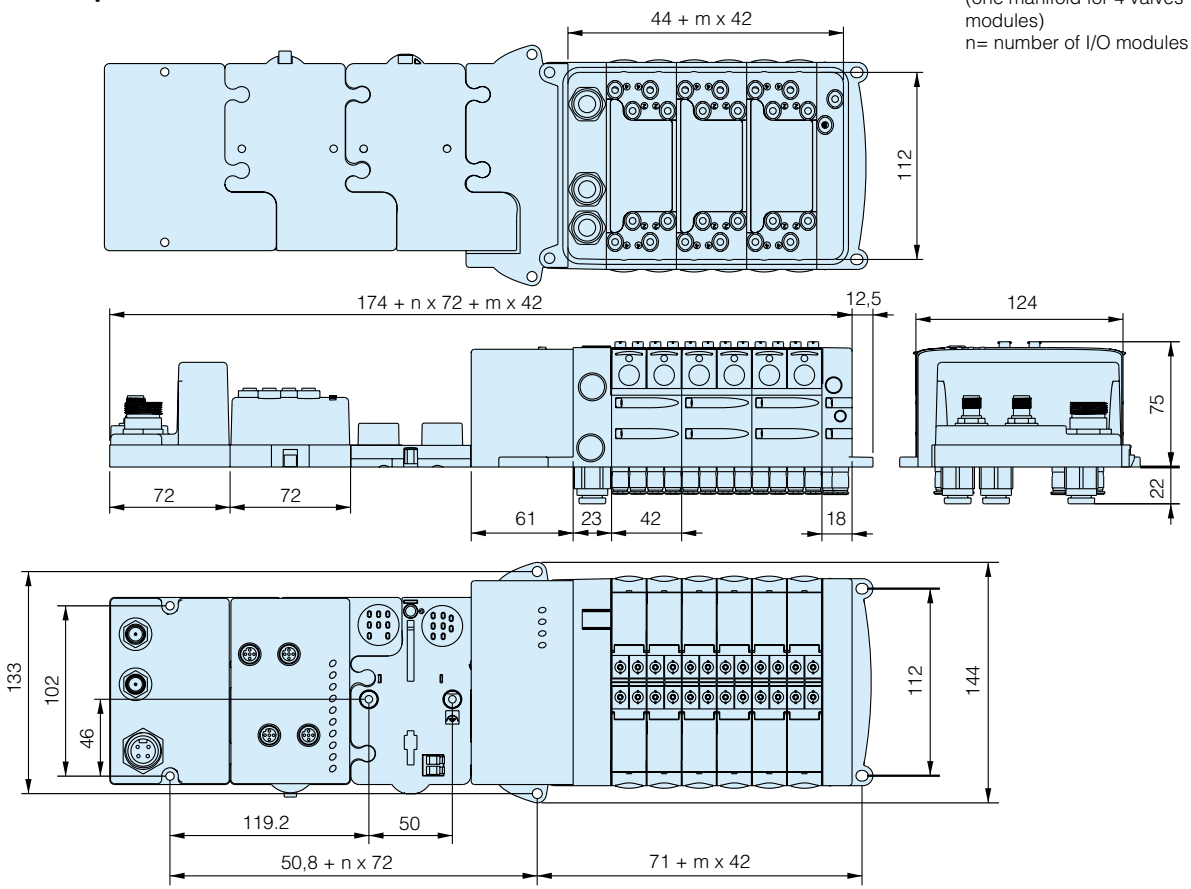

Note:
m = number of manifolds (one manifold for 4 valves modules)
n= number of I/O modules

Tel: +45 63 12 83 00 | Email: ps@hymatik.com | www.hymatik.com | Hvidkaervej 27a, DK-5250 Odense SV, Denmark

Moduflex Bus with Moduflex Valve

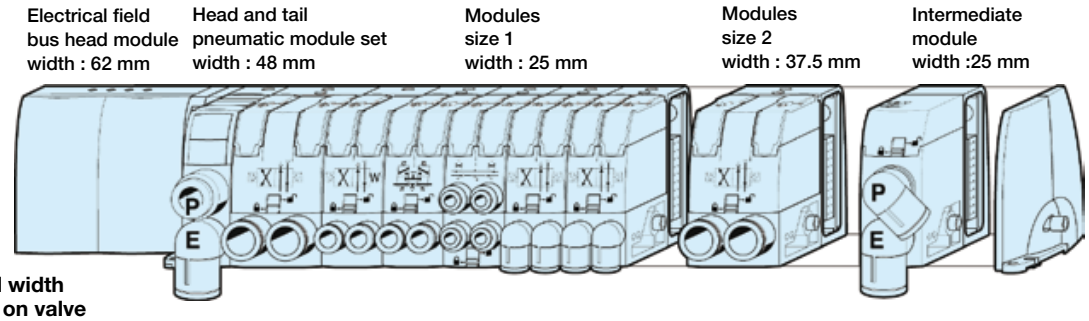

Island total width depending on valve composition

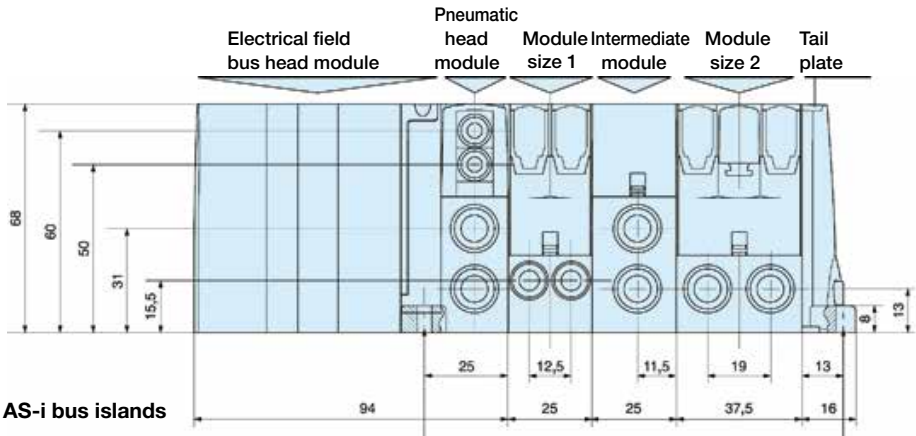

2 screws 4 mm dia. surface mounting

or DIN rail mounting

DIN rail 35x7 mm or 35x15 mm

AS-i bus islands

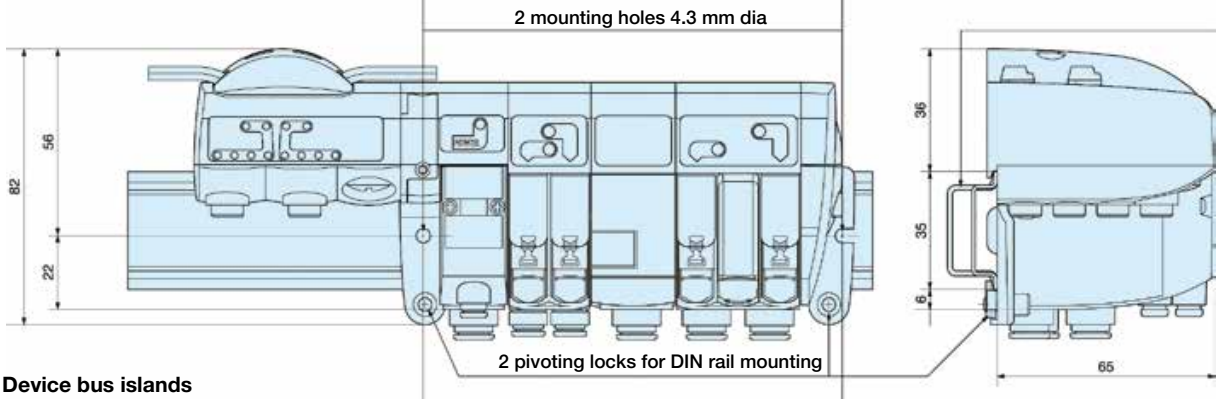

Device bus islands

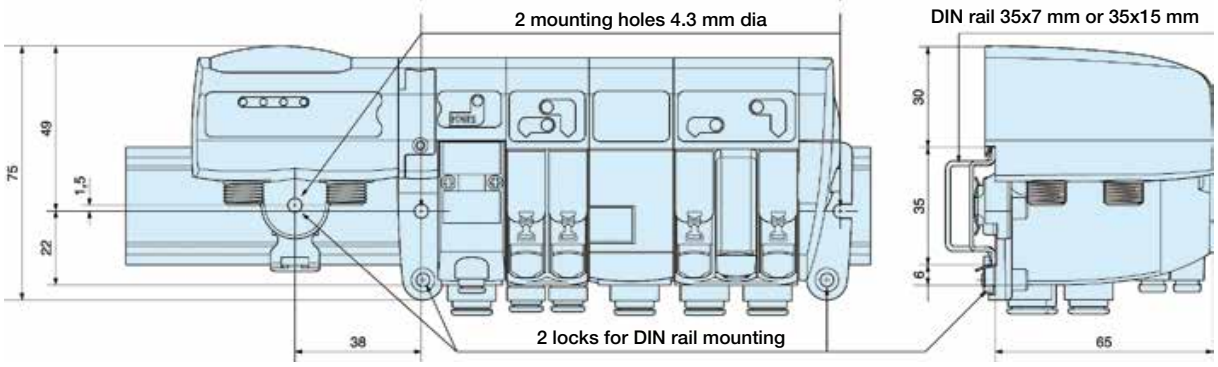

Tel: +45 63 12 83 00 | Email: ps@hymatik.com | www.hymatik.com | Hvidkaervej 27a, DK-5250 Odense SV, Denmark

H Series ISO 15407-2 & 5599-2 Sizes 02 to 3 with Moduflex Bus

HA/HB Series

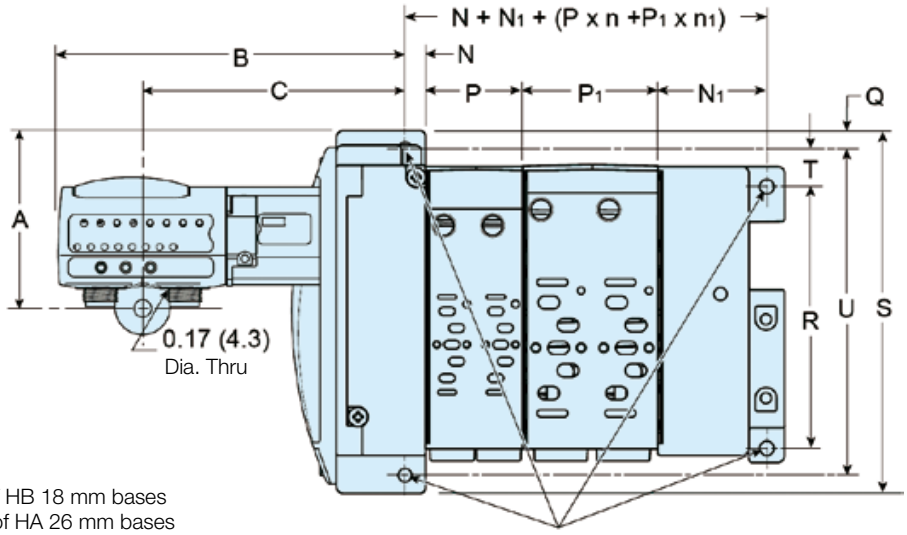

n = Number of HB 18 mm bases
n1 = Number of HA 26 mm bases

Holes for M6 (or 1/4")
Screws 4 places

H1/H2/H3 Series

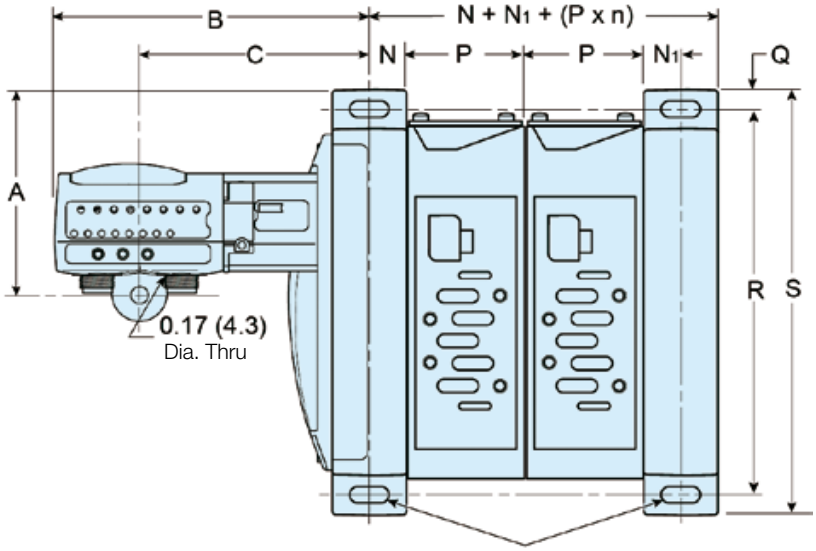

n = Number of H1/H2/H3 bases

Slots for M6 (or 1/4")
Screws 4 places

	A	B	C	N	N1	P	P1	Q	R	S	T	U
HA/HB	69,8	142,5	111,8	8,4	45,8	40,8	56,8	4	110	152	16	137
H1	82	130,2	160,9	15,9	15,9	49	-	8,5	165	182	-	-
H2	78,2	130,3	161	18	15	56	-	12	215	239	-	-
H3	84,2	138,2	168,9	24	16,5	71	-	15	265	295	-	-

Tel: +45 63 12 83 00 | Email: ps@hymatik.com | www.hymatik.com | Hvidkaervej 27a, DK-5250 Odense SV, Denmark

Moduflex Bus with H Series Micro Valves

Side ported

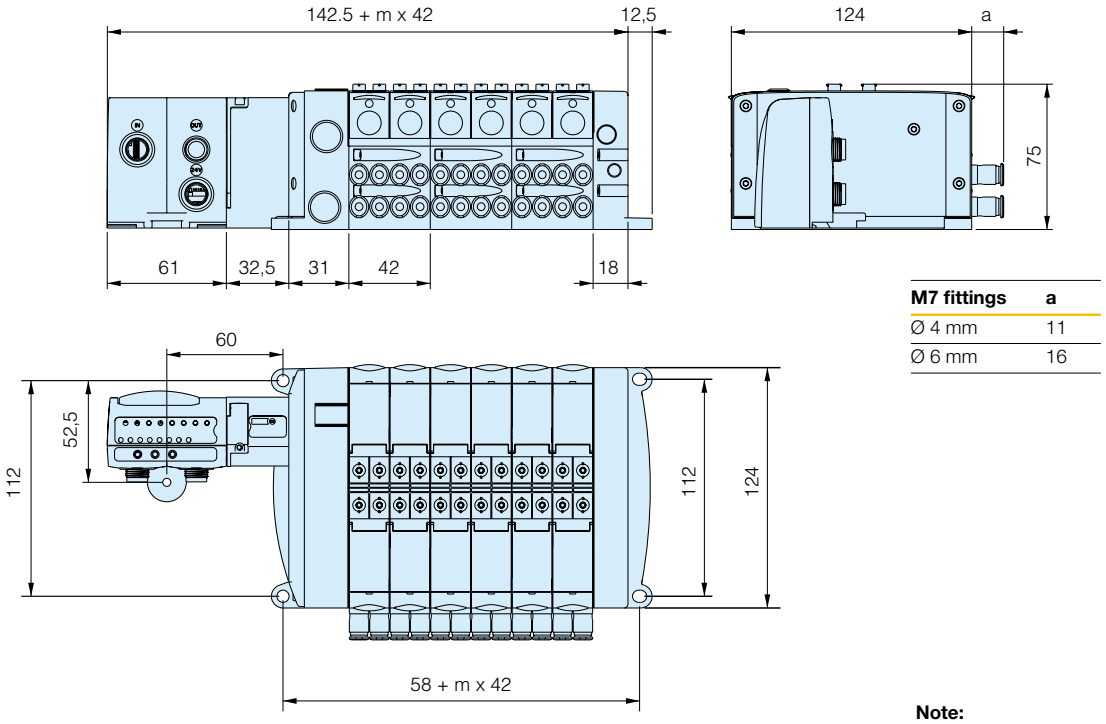

M7 fittings	a
Ø 4 mm	11
Ø 6 mm	16

Note:
m = number of manifolds (one manifold for 4 valves modules)

Bottom ported

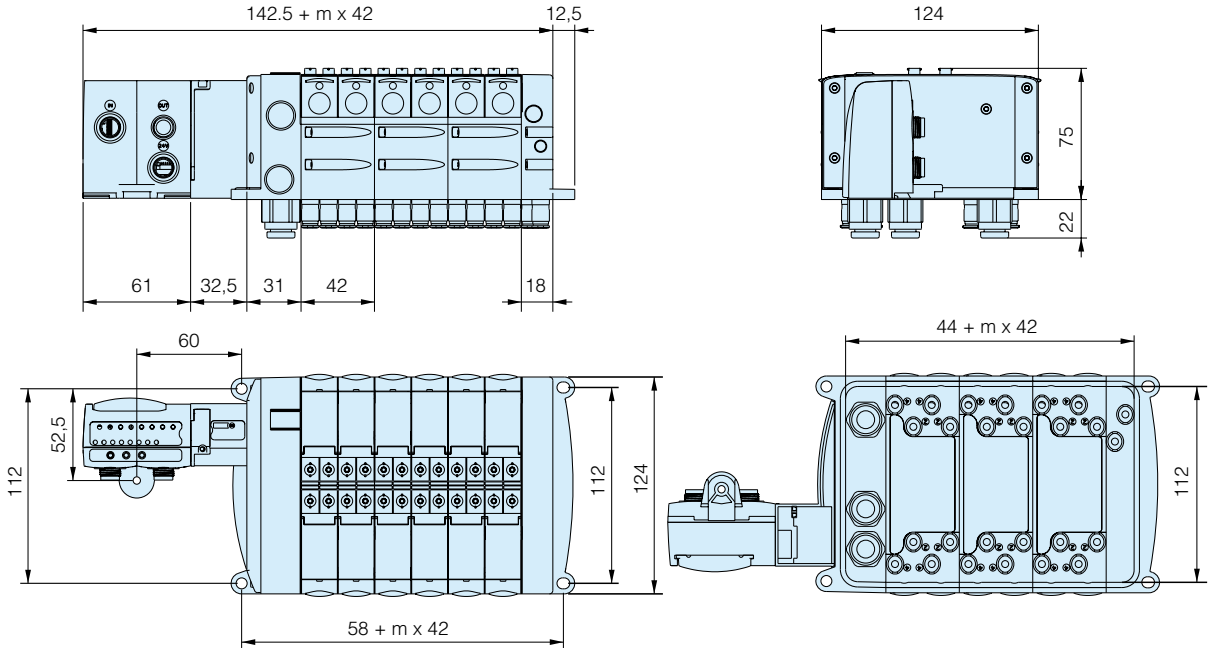

Tel: +45 63 12 83 00 | Email: ps@hymatik.com | www.hymatik.com | Hvidkaervej 27a, DK-5250 Odense SV, Denmark

H Series ISO 15407-2 & 5599-2 Sizes 02 to 3 with Turck BL67 Remote IO System

HA/HB Series

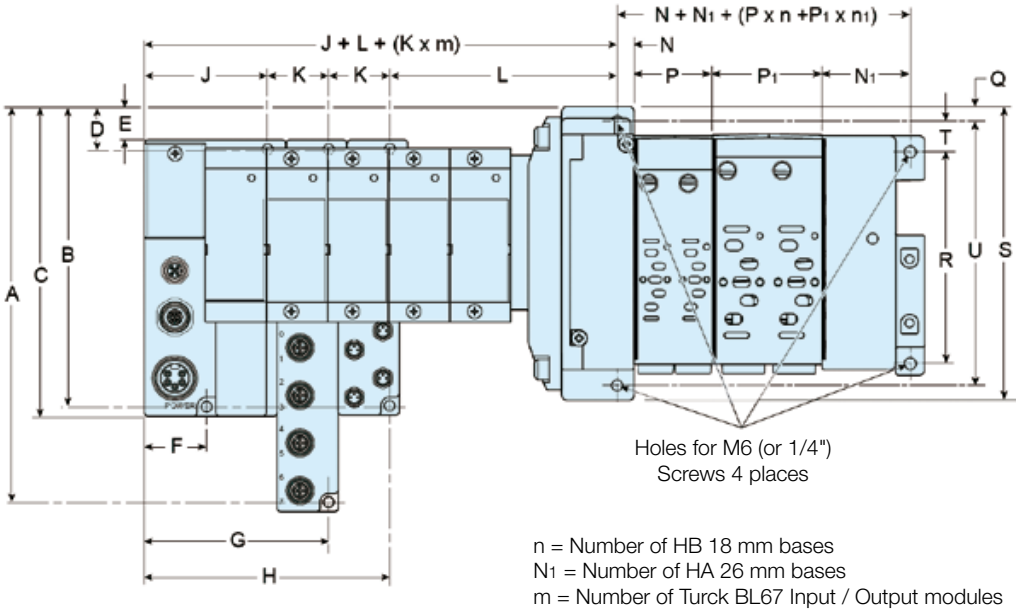

n = Number of HB 18 mm bases
N1 = Number of HA 26 mm bases
m = Number of Turck BL67 Input / Output modules

H1/H2/H3 Series

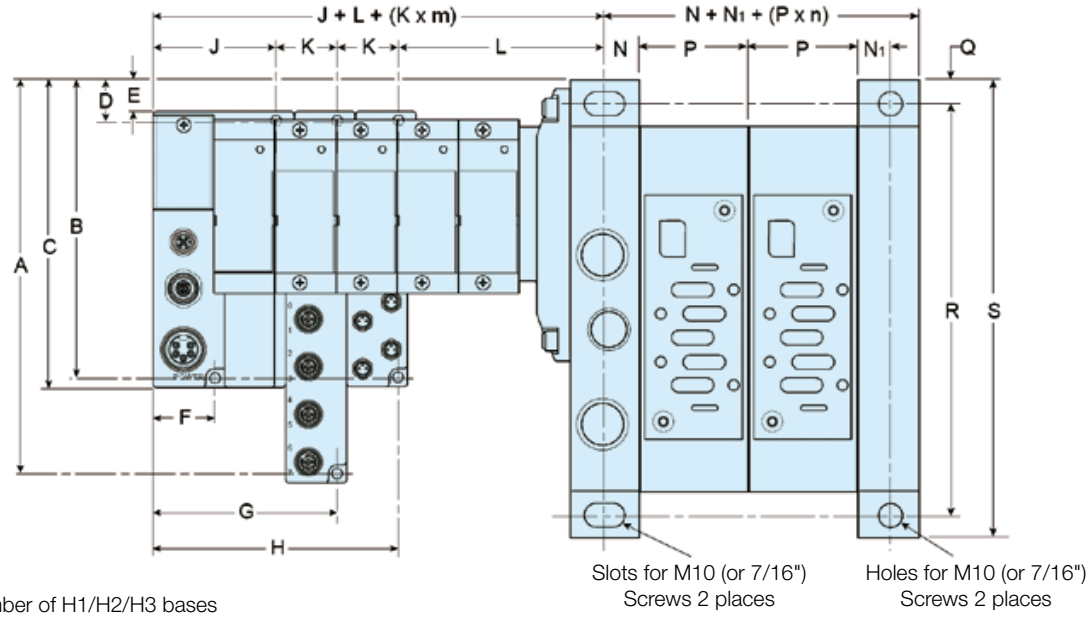

n = Number of H1/H2/H3 bases
m = Number of Turck BL67 Input / Output modules

	A	B	C	D	E	F	G	H	J	K	L	N	N1	P	P1	Q	R	S	T	U
HA/HB	204,5	154,5	159,5	19,5	14,5	32,5	96,5	128,5	64,5	32	120,8	8,4	45,8	40,8	56,8	4	110	152	16	137
H1	216,7	166,7	171,7	31,7	26,7	32,5	96,5	128,5	64,5	32	108,5	15,9	15,9	49	-	8,5	165	182	-	-
H2	212,9	162,9	167,9	27,9	22,9	32,5	96,5	128,5	64,5	32	108,6	18	15	56	-	12	215	239	-	-
H3	218,9	168,9	173,9	33,9	28,9	32,5	96,5	128,5	64,5	32	116,6	24	16,5	71	-	15	265	295	-	-

Tel: +45 63 12 83 00 | Email: ps@hymatik.com | www.hymatik.com | Hvidkaervej 27a, DK-5250 Odense SV, Denmark

H Series Micro Valves with TURCK BL67 Remote I/O System

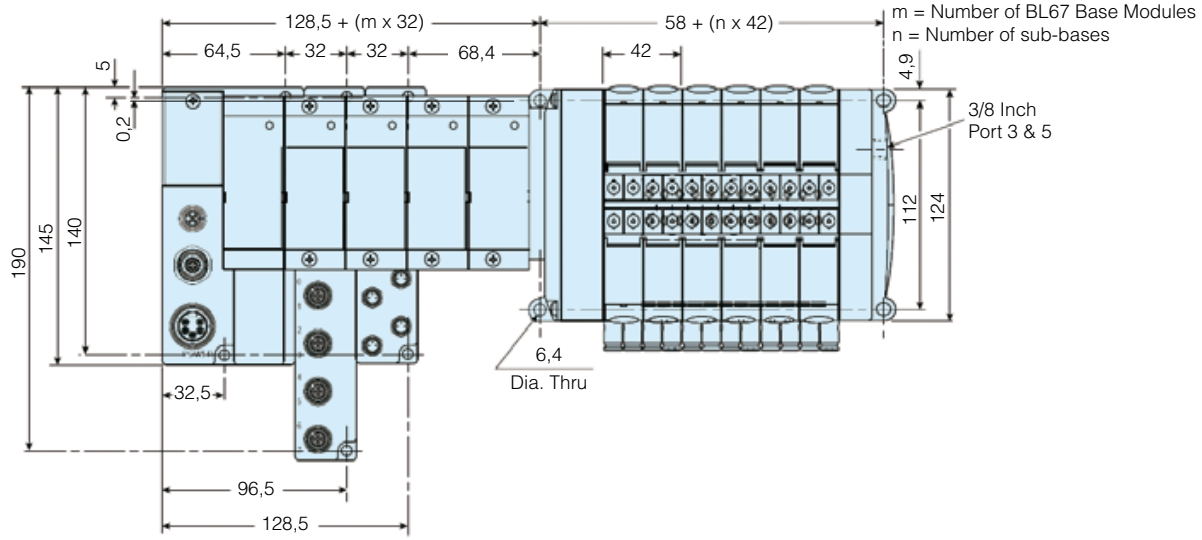

H Series Micro Valves with TURCK BL67 adaptor - Side ported

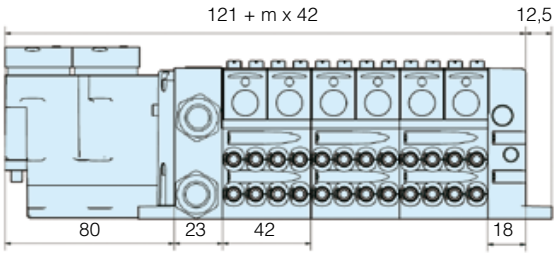

M7 fittings	a
Ø 4 mm	11
Ø 6 mm	16

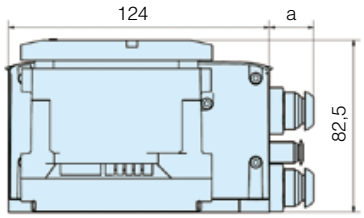

H Series Micro Valves with TURCK BL67 adaptor - Bottom ported

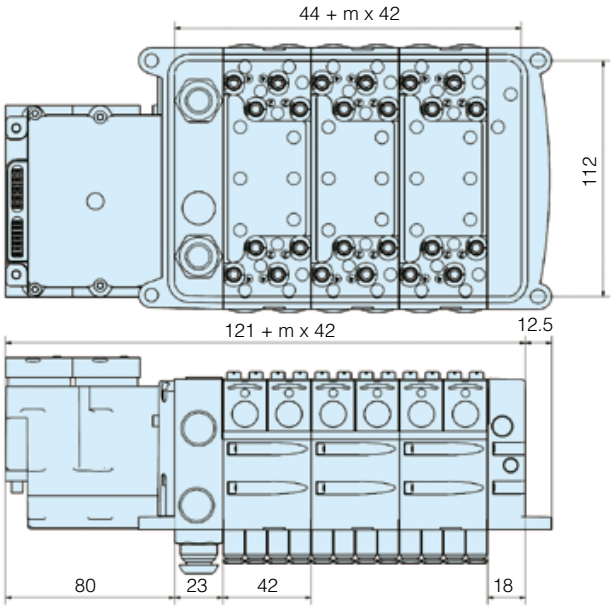

Note:
m = number of manifolds (one manifold for 4 valves modules)

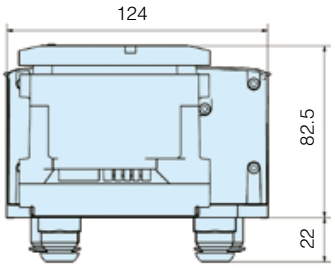

Tel: +45 63 12 83 00 | Email: ps@hymatik.com | www.hymatik.com | Hvidkaervej 27a, DK-5250 Odense SV, Denmark

High speed poppet type solenoid valves with individual electrical connections. Light weight plastic bodies with DIN rail manifold. Ideal for cabinet installations.

- High speed poppet valve
- Push-in connection
- Built-in terminal block
- Pneumatic output indicator
- DIN rail mounting

Poppet valve, not suitable for use with Soft or Slow start Valves. When pressure is applied, the double solenoid interface takes a pre-determined position (non activated). In the absence of electrical signal, output 2 (yellow indicator) is activated, output 4 (red indicator) is non activated. Double solenoid version is delivered as standard with Non locking flush override.



Operating information

Working pressure;	
3/2 and 4/2:	3-8 bar
Low pressure interface 3/2:	1-8 bar
Flow (Qmax):	200 l/min
Working temperature	-15 °C to +60 °C

For more information see www.parker.com/euro_pneumatic

Head and tail sets - intermediate supply modules

For 3/2 and 4/2 interface modules

	Description	Characteristics	Pneumatic connection	Weight (g)	Order code
	Set for single air supply connection	1 electrical common terminal 1 main air supply port 1 exhaust port	Push-in Ø 6 mm	100	**PS1-E101**
			G1/8	100	**PS1-E1018**
	Set for double air supply connection	1 electrical common terminal 2 main air supply ports 2 exhaust ports	Push-in Ø 6 mm	125	**PS1-E102**
			G1/8	125	**PS1-E1028**
	Intermediate air supply module	1 air supply port 1 exhaust port *(see description below)*	G1/8	45	**PS1-E1038**

Incorporating an intermediate air supply module into a group of electro-pneumatic modules gives the following options :

Air supply connection
- Additional G1/8 port to supplement the air supply to the manifold
- Blank the common air supply, enabling different pressures to be supplied to groups of modules within the manifold.

Exhaust connection
- Additional exhaust flow through the G1/8 port
- Blank the common exhaust, enabling seperation of exhaust from module groups

The intermediate air supply module is supplied with 4 interchangeable connectors to enable the above supply options to be achieved.

Electro-pneumatic modules

Modules without solenoid valve
Visual indication of pneumatic output status : Closed = Red Open = Yellow

	Symbol function	Description	Pneumatic connection	Weight (g)	Order code
		3/2 normally closed (NC)	Push-in Ø 4 mm	52	**PS1-E111**
			M5	55	**PS1-E115**
			Push-in Ø 6 mm	55	**PS1-E116**
		3/2 normally open (NO)	Push-in Ø 4 mm	52	**PS1-E121**
			M5	55	**PS1-E125**
			Push-in Ø 6 mm	55	**PS1-E126**
		4/2 single solenoid / spring return	Push-in Ø 4 mm	120	**PS1-E181**
			M5	120	**PS1-E185**
			Push-in Ø 6 mm	125	**PS1-E186**
		4/2 double solenoid	Push-in Ø 4 mm	120	**PS1-E191**
			M5	120	**PS1-E195**
			Push-in Ø 6 mm	125	**PS1-E196**

Tel: +45 63 12 83 00 | Email: ps@hymatik.com | www.hymatik.com | Hvidkaervej 27a, DK-5250 Odense SV, Denmark

Low pressure Electro-Pneumatic modules 3/2 (1 to 8 bar)

Modules without solenoid valve
Visual indication of pneumatic output status : Closed = Red Open = Yellow



Symbol	Description	Pneumatic connection	Weight (g	Order code
	3/2 normally closed (NC)	Push-in Ø 4 mm	52	**PS1-E311**
		M5	52	**PS1-E315**
		Push-in Ø 6 mm	52	**PS1-E316**

15mm DIN Form C (8mm spacing) pilot solenoid valve

For use with Valve module



				Flush (Not Extended)		Extended	
			Without Manual Override	Blue Override, non locking	Yellow Override, Locking	Blue Override, non locking	Yellow Override, Locking
	Voltage	W (g)	**Order code**	**Order code**	**Order code**	**Order code**	**Order code**
Pins/Air Same (Pins DOWN) 	12 Vdc	38	**P2E-KS32B0**	**P2E-KS32B1**	**P2E-KS32B2**	**P2E-KS32B3**	**P2E-KS32B4**
	24 Vdc	38	**P2E-KS32C0**	**P2E-KS32C1**	**P2E-KS32C2**	**P2E-KS32C3**	**P2E-KS32C4**
	48 Vdc	38	**P2E-KS32D0**	**P2E-KS32D1**	**P2E-KS32D2**	**P2E-KS32D3**	**P2E-KS32D4**
	24 Vac 50Hz	38	**P2E-KS31C0**	**P2E-KS31C1**	**P2E-KS31C2**	**P2E-KS31C3**	**P2E-KS31C4**
	48 Vac 50/60Hz	38	**P2E-KS34D0**	**P2E-KS34D1**	**P2E-KS34D2**	**P2E-KS34D3**	**P2E-KS34D4**
	115 Vac 50Hz 120 Vac 60 Hz	38	**P2E-KS31F0**	**P2E-KS31F1**	**P2E-KS31F2**	**P2E-KS31F3**	**P2E-KS31F4**
	230 Vac 50Hz 240 Vac 60 Hz	38	**P2E-KS31J0**	**P2E-KS31J1**	**P2E-KS31J2**	**P2E-KS31J3**	**P2E-KS31J4**

Mounting screws included with the valve module

Suppressor and LED indicators

For 8 mm solenoid pin spacing - For mounting between the valve body and the 15 mm pilot solenoid valve



Symbol	Description	Pneumatic connection	Weight (g)	Order code
	LED indicator	24 VAC/DC	3	**P8V-CR26C**
		115 VAC 50 Hz - 120 VAC 60 Hz	3	**P8V-CR24F**
		230 VAC 50 Hz - 240 VAC 60 Hz	3	**P8V-CR24J**

Electro-pneumatic modules

Modules including 24 VDC solenoid valve - Flush non locking manual override (using P2E-KS32C1 solenoid)
Visual indication of pneumatic output status : Closed = Red Open = Yellow



Symbol	Description	Manual override	Pneumatic connection	Weight (g)	Order code
	3/2 normally closed (NC) Spring return	Push-in Ø 4 mm 90	PS1-E21102B		
	3/2 normally open (NO)	Spring return	Push-in Ø 4 mm	90	**PS1-E22102B**
	 4/2 single solenoid / spring return	Spring return	Push-in Ø 4 mm	160	**PS1-E28102B**
	 4/2 double solenoid	-	Push-in Ø 4 mm	200	**PS1-E29102B**

Maintenance avertissement - Solenoid pin spacing

The electro-pneumatic interface modules have been re-designed to accept both 8 mm and 9,4 mm solenoid pin spacing. If you are purchasing a solenoid or a suppressor & LED indicator for maintenance on an electro-pneumatic interface module purchased before June 2004, above solenoid P2E-KS3xxx and P8V-CRxxx (8 mm pin spacing) will not be compatible. Please, contact your Parker customer service.

Accessories : Pressure switch

With Ø4 push in connection (pneumatic input)
With electrical terminals 1,5 mm² (electric output)

Type	Symbol	Electrical characteristics	Pneumatic characteristics	Override	Weight (g)	Order code
	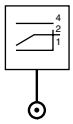	Pressure switch 1 CO contact 5 A/250 V	Fixed operating threshold < 1,3 bar	Manual override	50	**PS1-P1081**
			Adjustable operating threshold 2 to 5 bar	Manual override	50	**PS1-P1091**

Technical characteristics : Pressure switch

- Effective detection for preventing hazardous risks linked with equipments operating at to low pressure
- Manual override
- Easy clip on DIN rail mounting
- Fixed or adjustable threshold versions
- Recessed Electrical Terminals

Electrical durability

	24 VAC	48 VAC	115 VAC	24 VDC	48 VDC	115 VDC
1 million	25 VA	56 VA	115 VA	24 W	37 W	50 W
2 million	-	-	-	14 W	25 W	40 W
5 million	10 VA	14 VA	19 VA	-	-	-

Working pressure	Max 10 bar
Working temperature	-15 °C to +60 °C
Minimum actuating pressure, non adjustable	≤1,3 bar
Minimum actuating pressure, adjustable 2 to 5 bar	
Operating frequensy	Max 10 Hz
Nominal isolation voltage	660 V AC or DC
Nominal therminal current	10 A
Operating voltage	250 V
Pending current	5 A
Protection level	IP 40
According Power switches (inductive lead)	

Dimensions, PS1 valve Series

Electropneumatic interface modules 3/2 NC or NO

3/2 modules equiped with solenoid
Head and tail set for single air supply connection

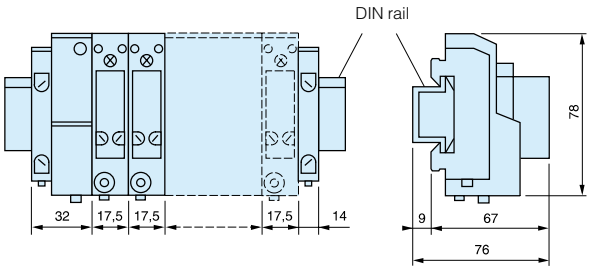

Total length (mm)
L = 46 + (n x 17,5)
n = number of modules

3/2 modules equiped with solenoid, suppressor and LED indicator Head and tail set for double air supply connection

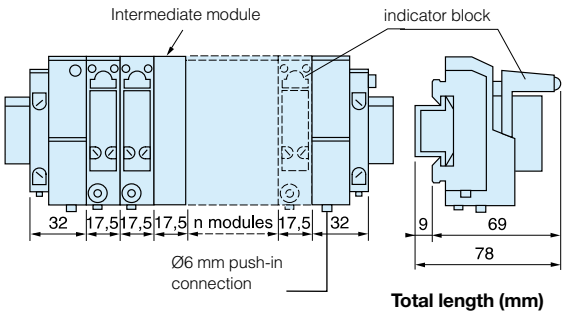

Total length (mm)
L = 64 + (n x 17,5)
n = number of modules

Electropneumatic interface modules 4/2 single or double solenoid

4/2 modules equiped with solenoid, suppressor and LED indicator
Head and tail set for double air supply connection

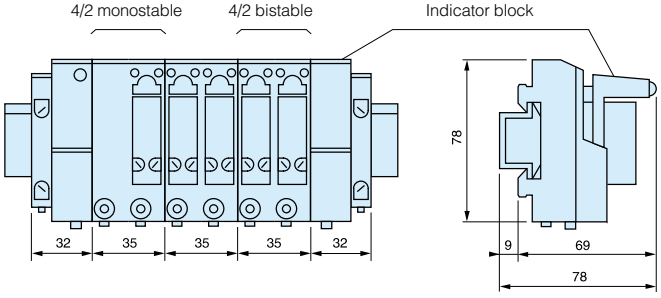

Total length (mm)
L = 64 + (n x 35)
n = number of modules

Tel: +45 63 12 83 00 | Email: ps@hymatik.com | www.hymatik.com | Hvidkaervej 27a, DK-5250 Odense SV, Denmark









PVL-B2

Stackable and Stand-alone Inline Valves



PVL-B21 - Stand-alone Series

Stand-alone high flow valves with 10 or 15mm DIN C Pilot Solenoid Valve. Light weight plastic bodies feature push-in or threaded connection.

PVL-B22 - Stackable Series

Stacking high flow valves with 10 or 15mm DIN C Pilot Solenoid Valve. Light weight plastic bodies feature push-in or threaded connection. Stacking valves feature modular inlet and exhaust facility.

- **High flow – Compact size with a 18 mm width body**
- **Push-in fitting diameter 6mm, 8mm or threaded G1/8”**
- **DIN rail or surface mounting**
- **Enonomic clip connector (IP40) or DIN Form C connection (IP65)**
- **Light weight construction**

Tel: +45 63 12 83 00 | Email: ps@hymatik.com | www.hymatik.com | Hvidkaervej 27a, DK-5250 Odense SV, Denmark

PVL-B2 Valve Range

18mm width

10mm 24 Vdc Pilot Valve
Economic electrical connection (IP40)



15mm Pilot Valve
Standard DIN form C electrical connection (IP65)



10mm Pilot Valve



Series Overview

PVL-B21 : Stand- alone Series – Traditional wiring
Very useful to control isolated cylinders, these stand-alone valve Series are compact and easy to mount on the machines close to the actuator with neat electrical pilot. Available with either 15 or 10 mm pilot solenoid valve traditional wiring, these Series can also be stacked and mixed into a stacking valve island Series

15mm Pilot Valve





PVL-B22 : Stackable Series – Traditional wiring
The PVL-B2 Series stacking system permits assembly of several valves into one stack. Supply is connected at either a single or a dual head/tail set. Two common exhaust galleries are provided. Connections to outlet ports 2 and 4 on each valve can be accomplished by G1/8" threaded pipe or instant tube fittings, 6 or 8 mm OD. Electrical connection is made to each solenoid using either a 15 mm - 3 pin - 8 mm spacing DIN Form C connector plug or Clip Connector. Each stack assembly can handle any combination of single or double solenoid valves



Compatibility with original PVL-B & PVL-C Series
Issued from the original PVL-B Series, the new PVL-B2 Series can be associated in one configuration mixing PVL-B & PVL-C Valves. For further details on the PVL-B & PVL-C Series, you can refer to the dedicated technical catalogue PDE2628TCUK



PVL-B2

3 Porting options
for an optimized flow



Push-In Fittings
- 6 mm OD Qn 490 Nl/mn (Qmax. 780 Nl/mn)
- 8 mm OD Qn 710 Nl/mn (Qmax. 1100 Nl/mn)



Threaded ports
- G1/8” Qn 640 Nl/mn (Qmax. 900 Nl/mn)

2 Electrical Pilot options
10 mm Pilot Solenoid Valve

Pins-UP option



Non locking Manual Override

24 Vdc – Low power (1W)

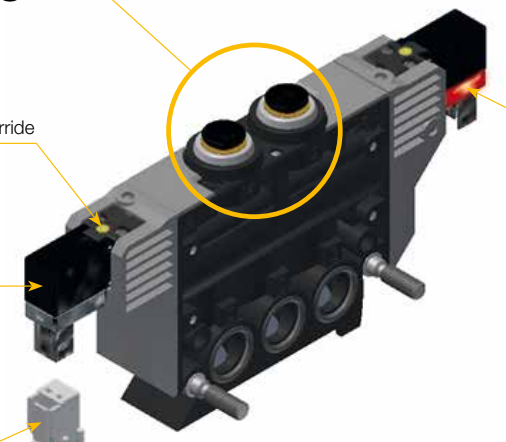

Integrated
LED Indicator



Pneumatic Symbol

Economic electrical connection
by Clip Connector – IP40



15 mm DIN For C Pilot Solenoid Valve



Standard DIN Form C connectors – IP65
8 mm spacing

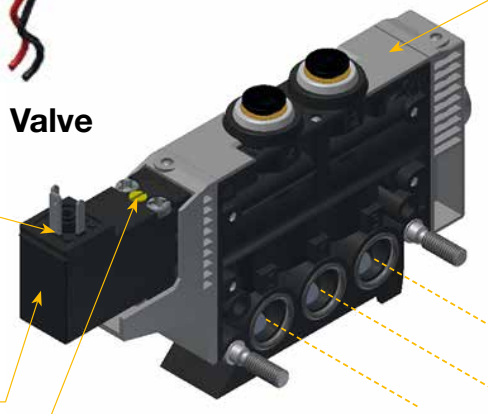



Wide range of DC and AC Voltage options

Common Supply and Exhaust Channels
for stackable design

5 manual override options



Pins-DOWN option

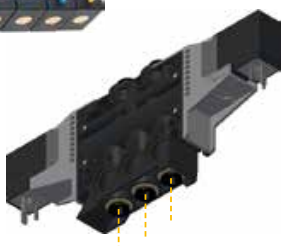

Supply and Exhaust Bottom Ported
for Stand-alone design



Tel: +45 63 12 83 00 | Email: ps@hymatik.com | www.hymatik.com | Hvidkaervej 27a, DK-5250 Odense SV, Denmark

PVL-B22 - Stackable Series

Stacking high flow valves with 10 or 15mm DIN C Pilot Solenoid Valve. Light weight plastic bodies feature push-in or threaded connection. Stacking valves feature modular inlet and exhaust facility.

- High flow – Compact size with a 18 mm width body
- Push-in fitting diameter 6mm, 8mm or threaded G1/8”
- DIN rail or surface mounting
- Economic clip connector (IP40) or DIN Form C connection (IP65)
- Light weight construction



PVL-B22 - Valve module

Equiped with 10mm - 24 Vdc - 1W pilot solenoid valve – LED Indicator – Pins Down*

	Symbol	Description	Pilot Man. Overr.	Connection	W (g)	Order code
		5/2 single acting spring return	Non-locking flush	Push-in 6mm	165	**PVL-B2213062C1**
				Push-in 8mm	165	**PVL-B2213082C1**
				G1/8"	165	**PVL-B2213182C1**
		5/2 single acting air spring return	Non-locking flush	Push-in 6mm	165	**PVL-B2233062C1**
				Push-in 8mm	165	**PVL-B2233082C1**
				G1/8"	165	**PVL-B2233182C1**
	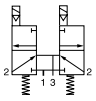	Dual 3/2 N.C. air spring return	Non-locking flush	Push-in 6mm	210	**PVL-B2253062C1**
				Push-in 8mm	210	**PVL-B2253082C1**
				G1/8"	210	**PVL-B2253182C1**
		5/2 Double acting	Non-locking flush	Push-in 6mm	200	**PVL-B2223062C1**
				Push-in 8mm	200	**PVL-B2223082C1**
				G1/8"	200	**PVL-B2223182C1**
	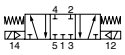	5/3 Closed center (APB)	Non-locking flush	Push-in 6mm	210	**PVL-B2273062C1**
				Push-in 8mm	210	**PVL-B2273082C1**
				G1/8"	210	**PVL-B2273182C1**
	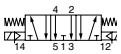	5/3 Vented center	Non-locking flush	Push-in 6mm	210	**PVL-B2283062C1**
				Push-in 8mm	210	**PVL-B2283082C1**
				G1/8"	210	**PVL-B2283182C1**
	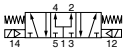	5/3 Pressurised center	Non-locking flush	Push-in 6mm	210	**PVL-B2293062C1**
				Push-in 8mm	210	**PVL-B2293082C1**
				G1/8"	210	**PVL-B2293182C1**

* Other electrical connection orientations or low voltages DC on demand (can be subject to quantity)

10 mm Pilot solenoid valve electrical clip connector

	Description	Connector type	Cable length	W (g)	Order code
	Clip-on connector – IP40 Individual : Including 2 flying leads Multiple : Including 1 common (0 Vdc) and 1 flying lead per connector	1 clip connector	1 meter	8	**P8LW021C**
		2 clip connectors	1 meter	12	**P8LW021C02**
		4 clip connectors	1 meter	20	**P8LW021C04**
		8 clip connectors	1 meter	36	**P8LW021C08**

Tel: +45 63 12 83 00 | Email: ps@hymatik.com | www.hymatik.com | Hvidkaervej 27a, DK-5250 Odense SV, Denmark

PVL-B22 - Valve module

Equiped with 15mm DIN Form C (8mm spacing) - 24 Vdc - 1,2W pilot solenoid valve – Pins Up

	Symbol	Description	Pilot Man. Overr.	Connection	W (g)	Order code
		5/2 single acting spring return	Locking flush	Push-in 6mm	165	**PVL-B2216062C2**
				Push-in 8mm	165	**PVL-B2216082C2**
				G1/8"	165	**PVL-B2216182C2**
		5/2 single acting air spring return	Locking flush	Push-in 6mm	165	**PVL-B2236062C2**
				Push-in 8mm	165	**PVL-B2236082C2**
				G1/8"	165	**PVL-B2236182C2**
	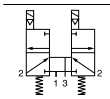	Dual 3/2 N.C. air spring return	Locking flush	Push-in 6mm	210	**PVL-B2256062C2**
				Push-in 8mm	210	**PVL-B2256082C2**
				G1/8"	210	**PVL-B2256182C2**
		5/2 Double acting	Non-locking flush	Push-in 6mm	200	**PVL-B2226062C1**
				Push-in 8mm	200	**PVL-B2226082C1**
				G1/8"	200	**PVL-B2226182C1**
	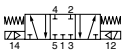	5/3 Closed center (APB)	Locking flush	Push-in 6mm	210	**PVL-B2276062C2**
				Push-in 8mm	210	**PVL-B2276082C2**
				G1/8"	210	**PVL-B2276182C2**
	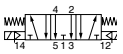	5/3 Vented center	Locking flush	Push-in 6mm	210	**PVL-B2286062C2**
				Push-in 8mm	210	**PVL-B2286082C2**
				G1/8"	210	**PVL-B2286182C2**
	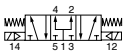	5/3 Pressurised center	Locking flush	Push-in 6mm	210	**PVL-B2296062C2**
				Push-in 8mm	210	**PVL-B2296082C2**
				G1/8"	210	**PVL-B2296182C2**

For other 15mm pilot valve options (voltage, manual override or pins orientation), valve body and 15mm pilot valve must be ordered separately (see below)

PVL-B22 - Valve module

(Without Pilot solenoid valve – including 2 mounting screws for Pilot solenoid valve)
For use with 15mm DIN Form C (8mm spacing) Pins UP or Pins DOWN pilot solenoid valve

	Symbol	Description	Connection	W (g)	Order code
		5/2 single acting spring return	Push-in 6mm	125	**PVL-B221606**
			Push-in 8mm	125	**PVL-B221608**
			G1/8"	125	**PVL-B221618**
		5/2 single acting air spring return	Push-in 6mm	125	**PVL-B223606**
			Push-in 8mm	125	**PVL-B223608**
			G1/8"	125	**PVL-B223618**
		Dual 3/2 N.C. air spring return	Push-in 6mm	130	**PVL-B225606**
			Push-in 8mm	130	**PVL-B225608**
			G1/8"	130	**PVL-B225618**
		5/2 Double acting	Push-in 6mm	120	**PVL-B222606**
			Push-in 8mm	120	**PVL-B222608**
			G1/8"	120	**PVL-B222618**
	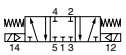	5/3 Closed center (APB)	Push-in 6mm	130	**PVL-B227606**
			Push-in 8mm	130	**PVL-B227608**
			G1/8"	130	**PVL-B227618**
	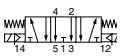	5/3 Vented center	Push-in 6mm	130	**PVL-B228606**
			Push-in 8mm	130	**PVL-B228608**
			G1/8"	130	**PVL-B228618**
	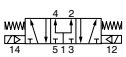	5/3 Pressurised center	Push-in 6mm	130	**PVL-B229606**
			Push-in 8mm	130	**PVL-B229608**
			G1/8"	130	**PVL-B229618**

15mm DIN Form C (8mm spacing) pilot solenoid valve – Pin's UP or Pin's DOWN – must be ordered separately (Refer to 15 mm pilot valve section)

Tel: +45 63 12 83 00 | Email: ps@hymatik.com | www.hymatik.com | Hvidkaervej 27a, DK-5250 Odense SV, Denmark

Head and Tail sets – Intermediate supply modules



Description	Mounting	Air supply	Port size	W (g)	Order code
Head and tail set	On DIN rail	Left end	G1/4"	175	**PVL-B1719**
		Both left and right ends	G1/4"	195	**PVL-B1729**
	On surface	Left end	G1/8"	175	**PVL-B1818**
		Both left and right ends	G1/8"	195	**PVL-B1828**
Internediate module	On DIN rail	Up side	G1/8"	150	**PVU-LBB118**

Pneumatic accessories









Description	Size	Orientation	Material	Tube OD	W (g)	Order code
Push-in fitting for Pressure and Exhaust ports	G1/4"	Straight	Metal	8 mm	16	**3101 08 13**
				10 mm	18	**3101 10 13**
				12 mm	27	**3101 12 13**
		Elbow	Metal/Plastic	8 mm	21	**3199 08 13**
				10 mm	28	**3199 10 13**
				12 mm	44	**3199 12 13**
Silencer	G1/4"	Straight	Plastic		10	**P6M-PAB2**
			Sintered metal		20	**P6M-BAA2**
Push-in fitting for PVL-B2 Valve	G1/8"	Straight	Metal	4 mm	6	**3101 04 10**
				6 mm	7	**3101 06 10**
				8 mm	11	**3101 08 10**
		Elbow prolongated	Plastic	4 mm	8	**3169 04 10**
				6 mm	11	**3169 06 10**
				8 mm	18	**3169 08 10**
		Elbow short	Plastic	4 mm	6	**3199 04 10**
				6 mm	6	**3199 06 10**
				8 mm	9	**3199 08 10**
	6 mm	Elbow prolongated	Plastic	4 mm	2	**3184 04 06**
				6 mm	4	**3184 06 00**
		Elbow short	Plastic	4 mm	3	**3182 04 06**
				6 mm	1	**3182 06 00**
	8 mm	Elbow prolongated	Plastic	6 mm	7	**3184 06 08**
				8 mm	10	**3184 08 00**
		Elbow short	Plastic	6 mm	7	**3182 06 08**
				8 mm	10	**3182 08 00**

Spare mounting and assembly kits



Description	W (g)	Order code
Sealing kit for supply/exhaust common channels Included : • 3 common blanking plugs • 2 drilled and threaded rods • 2 screws for extended tie rod	35	**PVL-B1901**
Pack of 10 common blanking	35	**PVL-B1902**
Pack of 10 stacking rods	35	**PPR-V21**
Pack of 20 rail clip assembly	70	**PPR-L09**
Pack of 30 O-ring seals for supply/exhaust common channels	15	**PPR-V23**

Tel: +45 63 12 83 00 | Email: ps@hymatik.com | www.hymatik.com | Hvidkaervej 27a, DK-5250 Odense SV, Denmark

Mounting on 35 mm DIN Rail

Valve stacks mount quickly and easily to 35 mm DIN rail with the use of a pneumatic head / tail set. The dual head / tail set provides input and exhaust ports at both ends and is recommended if more than 5 valves are to be operated simultaneously.

Surface mounting

For single or dual air supply
This mounting does not use DIN rail and can be directly fixed on the pannel. Particularly compact and threaded G1/8", it is recommended for combinations of only a few power valves (maximum 5 valves) since the supply and exhaust common ports 1-3-5 are not G1/4" oversized.

Removal or Replacement

Modules are removed in reverse of the order shown at right. Before removing a module for service or replacement, loosen the pneumatic tail piece.

Mounting Procedure

1 - Clip on and tighen the pneumatic head piece.

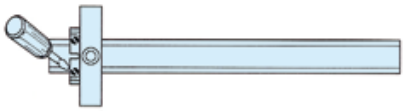

2 - Assemble the two parallel mounting rods using cross rod provided with modules.

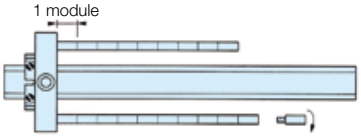

3 - Clip on the pneumatic tail piece. Start screws into mounting rod but leave loose for modules insertion.

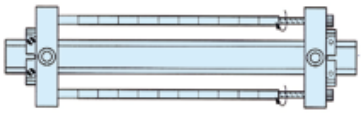

4 - To mount valves, position upper slot then push-lock lower slot. Mount modules (valves, modules, transition pieces, etc...) and press together.

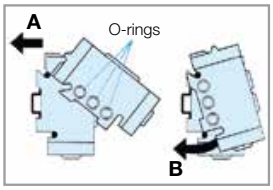

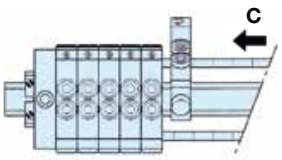

5 - Tighten the assembly.

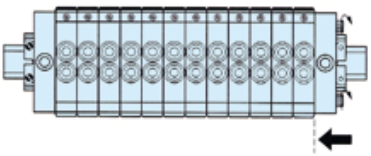

Tel: +45 63 12 83 00 | Email: ps@hymatik.com | www.hymatik.com | Hvidkaervej 27a, DK-5250 Odense SV, Denmark

PVL-B21 - Stand-alone Series

Stand-alone high flow valves with 10 or 15mm DIN C Pilot Solenoid Valve. Leight weight plastic bodies feature push-in or threaded connection.

- High flow – Compact size with a 18 mm width body
- Push-in fitting diameter 6mm, 8mm or threaded G1/8”
- Enonomic clip connector (IP40) or DIN Form C connection (IP65)
- Leight weight construction
- Compatible with stackable version

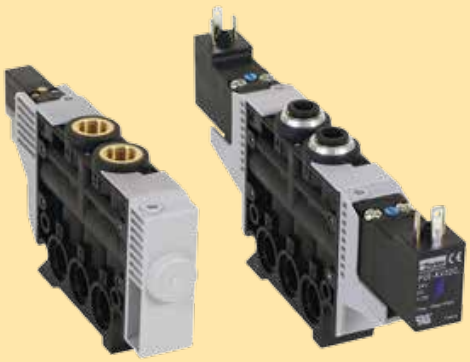

PVL-B21 - Valve module

Equiped with 10mm - 24 Vdc - 1W pilot solenoid valve – LED Indicator – Pins Down*

	Symbol	Description	Pilot Man. Overr.	Connection	W (g)	Order code
		5/2 single acting spring return	Non-locking flush	Push-in 6mm	165	**PVL-B2113062C1**
				Push-in 8mm	165	**PVL-B2113082C1**
				G1/8"	165	**PVL-B2113182C1**
		5/2 single acting air spring return	Non-locking flush	Push-in 6mm	165	**PVL-B2133062C1**
				Push-in 8mm	165	**PVL-B2133082C1**
				G1/8"	165	**PVL-B2133182C1**
		Dual 3/2 N.C. air spring return	Non-locking flush	Push-in 6mm	210	**PVL-B2153062C1**
				Push-in 8mm	210	**PVL-B2153082C1**
				G1/8"	210	**PVL-B2153182C1**
		5/2 Double acting	Non-locking flush	Push-in 6mm	200	**PVL-B2123062C1**
				Push-in 8mm	200	**PVL-B2123082C1**
				G1/8"	200	**PVL-B2123182C1**
	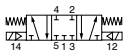	5/3 Closed center (APB)	Non-locking flush	Push-in 6mm	210	**PVL-B2173062C1**
				Push-in 8mm	210	**PVL-B2173082C1**
				G1/8"	210	**PVL-B2173182C1**
	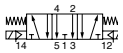	5/3 Vented center	Non-locking flush	Push-in 6mm	210	**PVL-B2183062C1**
				Push-in 8mm	210	**PVL-B2183082C1**
				G1/8"	210	**PVL-B2183182C1**
	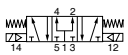	5/3 Pressurised center	Non-locking flush	Push-in 6mm	210	**PVL-B2193062C1**
				Push-in 8mm	210	**PVL-B2193082C1**
				G1/8"	210	**PVL-B2193182C1**

* Other electrical connection orientations or low voltages DC on demand (can be subject to quantity)

10 mm Pilot solenoid valve electrical clip connector

	Description	Connector type	Cable length	W (g)	Order code
	Clip-on connector – IP40 Individual : Including 2 flying leads Multiple : Including 1 common (0 Vdc) and 1 flying lead per connector	1 clip connector	1 meter	8	**P8LW021C**
		2 clip connectors	1 meter	12	**P8LW021C02**
		4 clip connectors	1 meter	20	**P8LW021C04**
		8 clip connectors	1 meter	36	**P8LW021C08**

Tel: +45 63 12 83 00 | Email: ps@hymatik.com | www.hymatik.com | Hvidkaervej 27a, DK-5250 Odense SV, Denmark

PVL-B21 - Valve module

Equiped with 15mm DIN Form C (8mm spacing) - 24 Vdc - 1,2W pilot solenoid valve – Pins Up





Symbol	Description	Pilot Man. Overr.	Connection	W (g)	Order code
	5/2 single acting spring return	Locking flush	Push-in 6mm	165	**PVL-B2116062C2**
			Push-in 8mm	165	**PVL-B2116082C2**
			G1/8"	165	**PVL-B2116182C2**
	5/2 single acting air spring return	Locking flush	Push-in 6mm	165	**PVL-B2136062C2**
			Push-in 8mm	165	**PVL-B2136082C2**
			G1/8"	165	**PVL-B2136182C2**
	Dual 3/2 N.C. air spring return	Locking flush	Push-in 6mm	210	**PVL-B2156062C2**
			Push-in 8mm	210	**PVL-B2156082C2**
			G1/8"	210	**PVL-B2156182C2**
	5/2 Double acting	Non-locking flush	Push-in 6mm	200	**PVL-B2126062C1**
			Push-in 8mm	200	**PVL-B2126082C1**
			G1/8"	200	**PVL-B2126182C1**
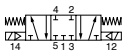	5/3 Closed center (APB)	Locking flush	Push-in 6mm	210	**PVL-B2176062C2**
			Push-in 8mm	210	**PVL-B2176082C2**
			G1/8"	210	**PVL-B2176182C2**
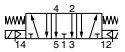	5/3 Vented center	Locking flush	Push-in 6mm	210	**PVL-B2186062C2**
			Push-in 8mm	210	**PVL-B2186082C2**
			G1/8"	210	**PVL-B2186182C2**
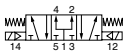	5/3 Pressurised center	Locking flush	Push-in 6mm	210	**PVL-B2196062C2**
			Push-in 8mm	210	**PVL-B2196082C2**
			G1/8"	210	**PVL-B2196182C2**

For other 15mm pilot valve options (voltage, manual override or pins orientation), valve body and 15mm pilot valve must be ordered separately (see below)

PVL-B21 - Valve module

(Without Pilot solenoid valve – including 2 mounting screws for Pilot solenoid valve)
For use with 15mm DIN Form C (8mm spacing) Pins UP or Pins DOWN pilot solenoid valve





Symbol	Description	Connection	W (g)	Order code
	Dual 3/2 N.C. air spring return	Push-in 6mm	130	**PVL-B215606**
		Push-in 8mm	130	**PVL-B215608**
		G1/8"	130	**PVL-B215618**
	5/2 single acting spring return	Push-in 6mm	125	**PVL-B211606**
		Push-in 8mm	125	**PVL-B211608**
		G1/8"	125	**PVL-B211618**
	5/2 single acting air spring return	Push-in 6mm	125	**PVL-B213606**
		Push-in 8mm	125	**PVL-B213608**
		G1/8"	125	**PVL-B213618**
	5/2 Double acting	Push-in 6mm	120	**PVL-B212606**
		Push-in 8mm	120	**PVL-B212608**
		G1/8"	120	**PVL-B212618**
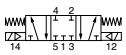	5/3 Closed center (APB)	Push-in 6mm	130	**PVL-B217606**
		Push-in 8mm	130	**PVL-B217608**
		G1/8"	130	**PVL-B217618**
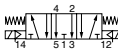	5/3 Vented center	Push-in 6mm	130	**PVL-B218606**
		Push-in 8mm	130	**PVL-B218608**
		G1/8"	130	**PVL-B218618**
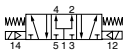	5/3 Pressurised center	Push-in 6mm	130	**PVL-B219606**
		Push-in 8mm	130	**PVL-B219608**
		G1/8"	130	**PVL-B219618**

15mm DIN Form C (8mm spacing) pilot solenoid valve – Pin's UP or Pin's DOWN – must be ordered separately (Refer to 15 mm pilot valve section)

Tel: +45 63 12 83 00 | Email: ps@hymatik.com | www.hymatik.com | Hvidkaervej 27a, DK-5250 Odense SV, Denmark

Pneumatic accessories

	Description	Size	Orientation	Material	Tube OD	W (g)	Order code
 3101 ...	Push-in fitting for PVL-B2 Valve	G1/8"	Straight	Metal	4 mm	6	**3101 04 10**
					6 mm	7	**3101 06 10**
					8 mm	11	**3101 08 10**
			Elbow prolongated	Plastic	4 mm	8	**3169 04 10**
					6 mm	11	**3169 06 10**
 3169 ... 3199 ...					8 mm	18	**3169 08 10**
			Elbow short	Plastic	4 mm	6	**3199 04 10**
					6 mm	6	**3199 06 10**
					8 mm	9	**3199 08 10**
		6 mm	Elbow prolongated	Plastic	4 mm	2	**3184 04 06**
					6 mm	4	**3184 06 00**
 3184 ... 3182 ...			Elbow short	Plastic	4 mm	3	**3182 04 06**
					6 mm	1	**3182 06 00**
		8 mm	Elbow prolongated	Plastic	6 mm	7	**3184 06 08**
					8 mm	10	**3184 08 00**
			Elbow short	Plastic	6 mm	7	**3182 06 08**
					8 mm	10	**3182 08 00**

PVL-B2 – 10 mm pilot solenoid valve options

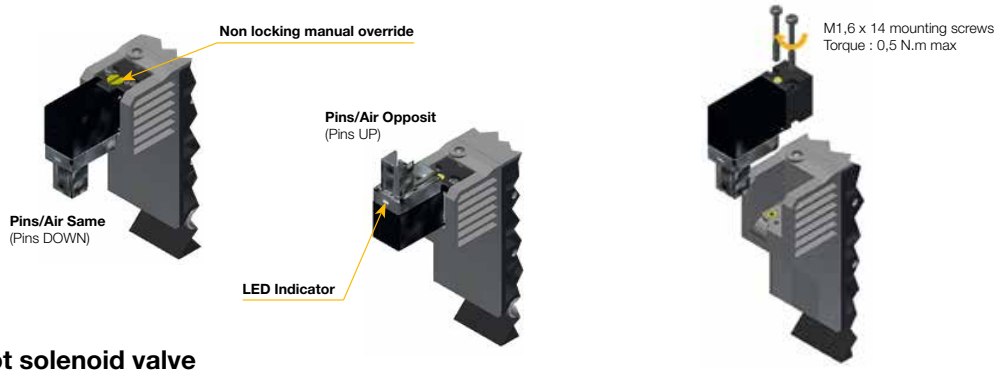

10 mm pilot solenoid valve



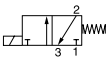

Voltage	Electrical connection orientation	Manual Override	W (g)	Order code
24 Vdc	PINs /AIR same (PINs down)	Non-locking flush	20	**P2D-KS32C1**
	PINs/AIR opposit (PINs UP)	Non-locking flush	20	**P2D-KV32C1**

Other electrical connection orientations or low voltages DC on demand (can be subject to quantity)

10 mm Pilot solenoid valve electrical clip connector

	Description	Connector type	Cable length	W (g)	Order code
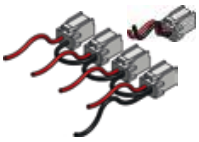	Clip-on connector – IP40 Individual : Including 2 flying leads Multiple : Including 1 common (0 Vdc) and 1 flying lead per connector	1 clip connector	1 meter	8	**P8LW021C**
		2 clip connectors	1 meter	12	**P8LW021C02**
		4 clip connectors	1 meter	20	**P8LW021C04**
		8 clip connectors	1 meter	36	**P8LW021C08**

Tel: +45 63 12 83 00 | Email: ps@hymatik.com | www.hymatik.com | Hvidkaervej 27a, DK-5250 Odense SV, Denmark

PVL-B2 – 15 mm pilot solenoid valve options

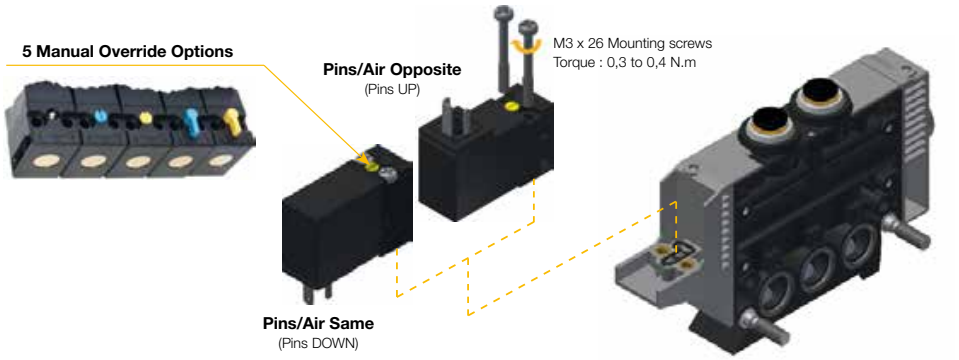

15mm DIN Form C (8mm spacing) pilot solenoid valve

For use with 15mm pilot solenoid valve PVL-B2 body

			Manual Overrides	Flush (Not Extended)		Extended	
			Without Manual Override	Blue Override, non locking	Yellow Override, Locking	Blue Override, non locking	Yellow Override, Locking
	Voltage	W (g)	**Order code**	**Order code**	**Order code**	**Order code**	**Order code**
Pins/Air Opposite (Pins UP)	12 Vdc	38	**P2E-KV32B0**	**P2E-KV32B1**	**P2E-KV32B2**	**P2E-KV32B3**	**P2E-KV32B4**
	24 Vdc	38	**P2E-KV32C0**	**P2E-KV32C1**	**P2E-KV32C2**	**P2E-KV32C3**	**P2E-KV32C4**
	48 Vdc	38	**P2E-KV32D0**	**P2E-KV32D1**	**P2E-KV32D2**	**P2E-KV32D3**	**P2E-KV32D4**
	24 Vac 50Hz	38	**P2E-KV31C0**	**P2E-KV31C1**	**P2E-KV31C2**	**P2E-KV31C3**	**P2E-KV31C4**
	48 Vac 50/60Hz	38	**P2E-KV34D0**	**P2E-KV34D1**	**P2E-KV34D2**	**P2E-KV34D3**	**P2E-KV34D4**
	115 Vac 50Hz 120 Vac 60 Hz	38	**P2E-KV31F0**	**P2E-KV31F1**	**P2E-KV31F2**	**P2E-KV31F3**	**P2E-KV31F4**
	230 Vac 50Hz 240 Vac 60 Hz	38	**P2E-KV31J0**	**P2E-KV31J1**	**P2E-KV31J2**	**P2E-KV31J3**	**P2E-KV31J4**
Pins/Air Same (Pins DOWN)	12 Vdc	38	**P2E-KS32B0**	**P2E-KS32B1**	**P2E-KS32B2**	**P2E-KS32B3**	**P2E-KS32B4**
	24 Vdc	38	**P2E-KS32C0**	**P2E-KS32C1**	**P2E-KS32C2**	**P2E-KS32C3**	**P2E-KS32C4**
	48 Vdc	38	**P2E-KS32D0**	**P2E-KS32D1**	**P2E-KS32D2**	**P2E-KS32D3**	**P2E-KS32D4**
	24 Vac 50Hz	38	**P2E-KS31C0**	**P2E-KS31C1**	**P2E-KS31C2**	**P2E-KS31C3**	**P2E-KS31C4**
	48 Vac 50/60Hz	38	**P2E-KS34D0**	**P2E-KS34D1**	**P2E-KS34D2**	**P2E-KS34D3**	**P2E-KS34D4**
	115 Vac 50Hz 120 Vac 60 Hz	38	**P2E-KS31F0**	**P2E-KS31F1**	**P2E-KS31F2**	**P2E-KS31F3**	**P2E-KS31F4**
	230 Vac 50Hz 240 Vac 60 Hz	38	**P2E-KS31J0**	**P2E-KS31J1**	**P2E-KS31J2**	**P2E-KS31J3**	**P2E-KS31J4**

Mounting screws included with the valve body

Pilot solenoid valve mounting screw

Description	Size	Material	W (g)	**Order code**
Kit of 10 mounting screws	M23 x 26	Steel	20	**P2E-KP026PM3**

Cable plugs 15 mm - IP65

(8 mm pin spacing)

Description	Electrical protection	Cable length	W (g)	**Order code**
Standard screw	No protection	No cable	11	**P8C-D**
		2 meter	97	**P8L-C2**
		5 meter	228	**P8L-C5**
	LED + Protection 24 VDC	No cable	11	**P8C-D26C**
	LED + Protection 24 VDC/AC	2 meter	97	**P8L-C226C**
		5 meter	229	**P8L-C526C**

Suppressor and LED indicators

For 8 mm solenoid pin spacing - For mounting between the solenoid valve and the cable plug

Symbol	Description	Pneumatic connection	W (g)	**Order code**
	LED indicator	24 VAC/DC	3	**P8V-CR26C**
		115 VAC 50 Hz - 120 VAC 60 Hz	3	**P8V-CR24F**
		230 VAC 50 Hz - 240 VAC 60 Hz	3	**P8V-CR24J**

Tel: +45 63 12 83 00 | Email: ps@hymatik.com | www.hymatik.com | Hvidkaervej 27a, DK-5250 Odense SV, Denmark

PVL-B21 (Stand-alone) & PVL-B22 (Stackable) – with 15 mm pilot solenoid valve – Pins UP

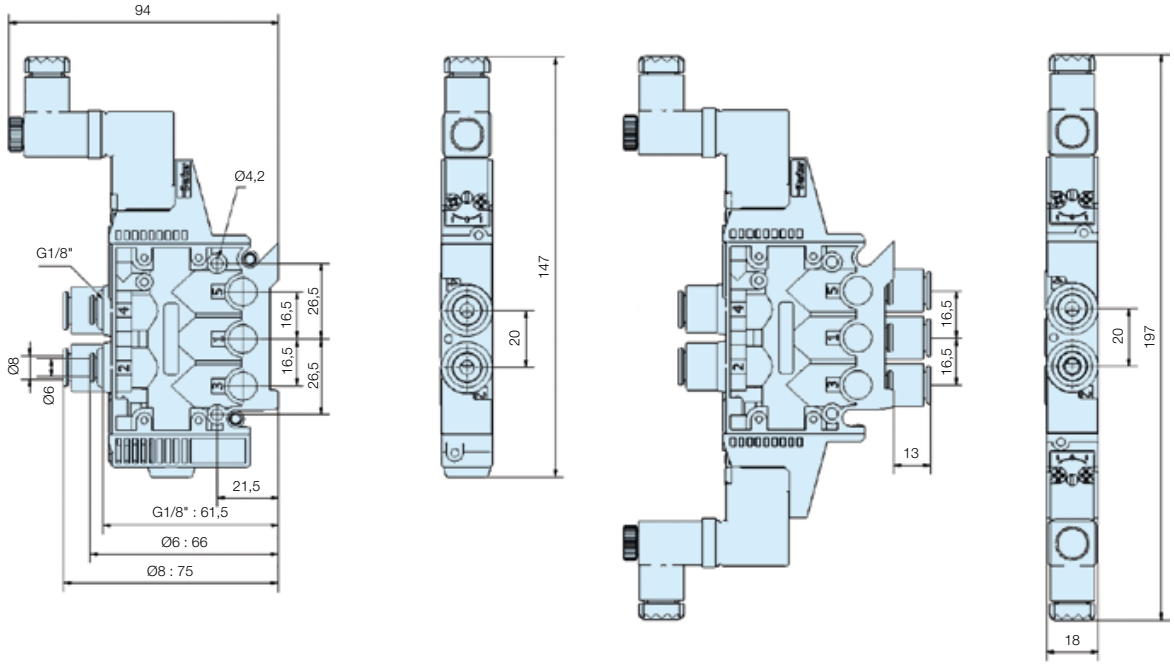

PVL-B21 (Stand-alone) & PVL-B22 (Stackable) – with 15 mm pilot solenoid valve – Pins DOWN

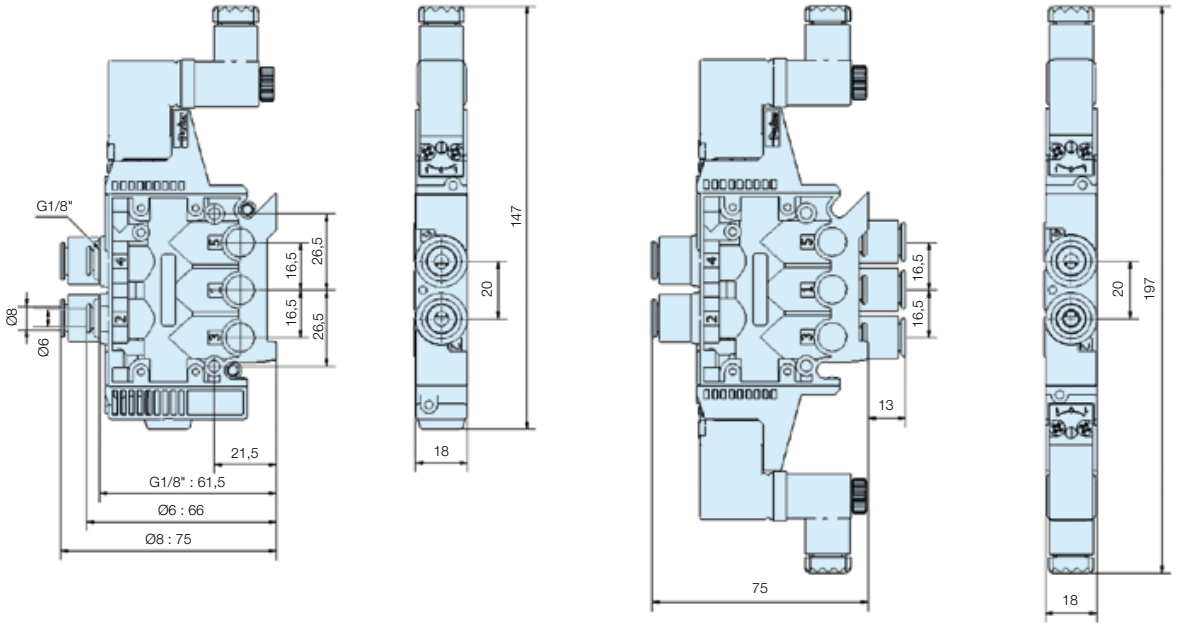

Tel: +45 63 12 83 00 | Email: ps@hymatik.com | www.hymatik.com | Hvidkaervej 27a, DK-5250 Odense SV, Denmark

PVL-B21 (Stand-alone) & PVL-B22 (Stackable) – with 10 mm pilot solenoid valve – Pins DOWN

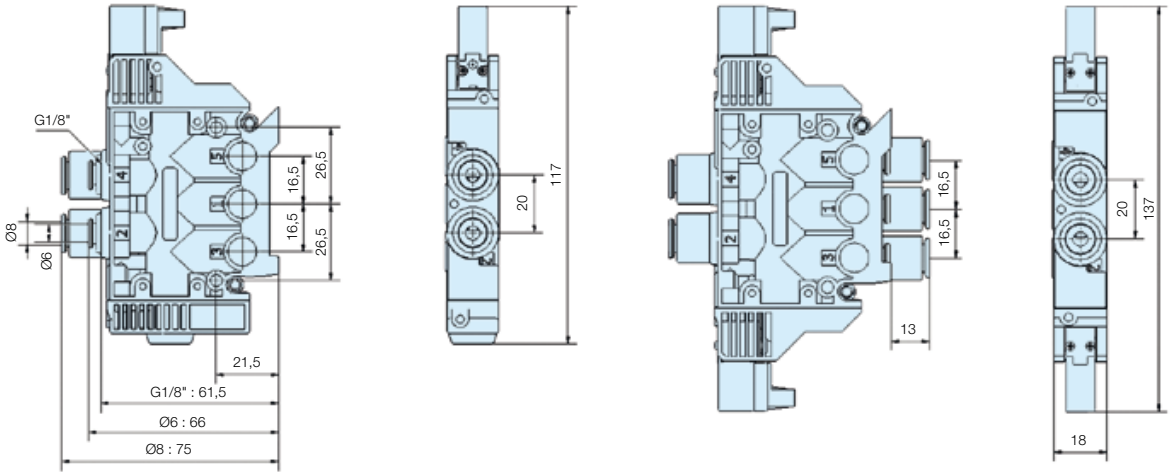

PVL-B21 (Stand-alone) & PVL-B22 (Stackable) – with 10 mm pilot solenoid valve – Pins UP

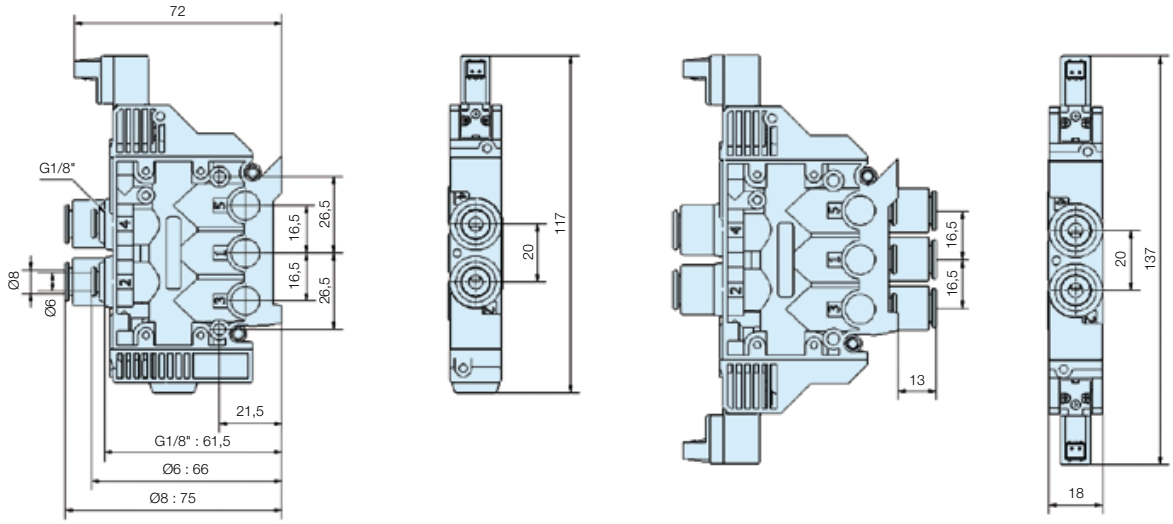

Tel: +45 63 12 83 00 | Email: ps@hymatik.com | www.hymatik.com | Hvidkaervej 27a, DK-5250 Odense SV, Denmark

PVL-B22 (Stackable) – Head and Tail sets – DIN rail mounting

Single air supply – PVL-B1719

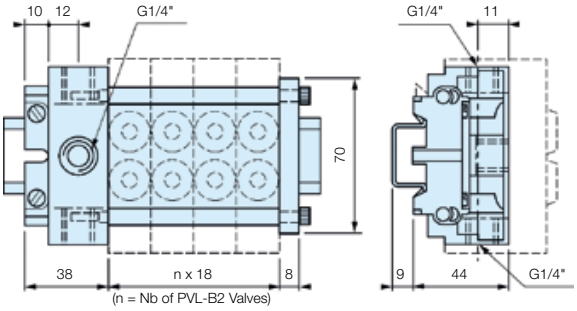

Dual air supply – PVL-B1729

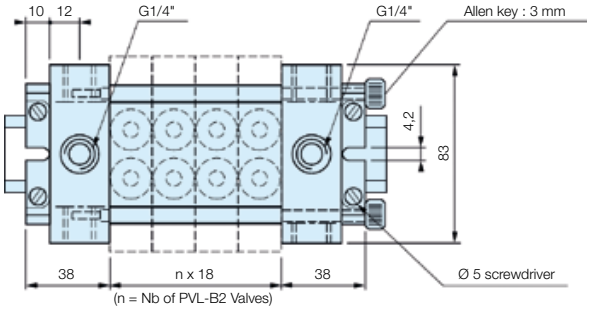

PVL-B22 (Stackable) – Head and Tail sets – Surface mounting

Single air supply – PVL-B1818

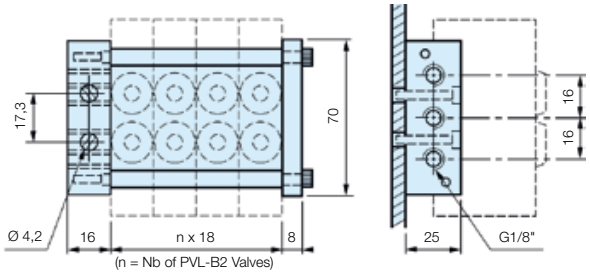

Dual air supply – PVL-B1828

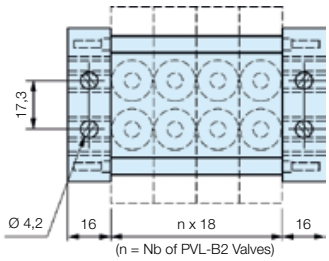

PVL-B22 (Stackable) – Intermediate supply module – PVU-LBB118

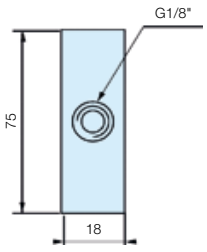

Stacking high flow valves with air pilot or solenoid actuation. Lightweight plastic bodies feature push-in or threaded connections. Stacking valves feature modular inlet and exhaust facility.



- High flow, compact size
- Push-in or threaded connection
- DIN rail or block mounting
- Light weight construction

For ATEX specific products contact Sales Office

Operating information

Working pressure;		
Pneumatically operated:	2-10 bar	
Electrically operated, bistable:	2-10 bar	
Electrically operated, monostable:	3-10 bar	
Working temperature	-15 °C to +60 °C	
	PVL-B	**PVL-C**
Flow (Qmax):	900 l/min	1800 l/min
Flow Qn:	540 l/min	1100 l/min

Flow measured with valve stacked in island.

PVL-B & PVL-C Valve body - Stand alone and stackable design - Without pilot

Pneumatic or 15 mm electric pilot must be ordered separately

	Symbol	Description	Valve size	Connection	Weight (g)	Stand Alone Order code	Stackable Order code
		5/2 single acting / Spring return	PVL-B	Push-in Ø 6 mm	125	**PVL-B111606**	**PVL-B121606**
				G 1/8	125	**PVL-B111618**	**PVL-B121618**
			PVL-C	Push-in Ø 8 mm	240	**PVL-C111608**	**PVL-C121608**
				G 1/4	240	**PVL-C111619**	**PVL-C121619**
				G 3/8	240	**PVL-C111613**	**PVL-C121613**
		5/2 single acting / Air spring return	PVL-B	Push-in Ø 6 mm	125	**PVL-B113606**	**PVL-B123606**
				G 1/8	125	**PVL-B113618**	**PVL-B123618**
			PVL-C	Push-in Ø 8 mm	240	**PVL-C113608**	**PVL-C123608**
				G 1/4	240	**PVL-C113619**	**PVL-C123619**
				G 3/8	240	**PVL-C113613**	**PVL-C123613**
		5/2 double acting	PVL-B	Push-in Ø 6 mm	120	**PVL-B112606**	**PVL-B122606**
				G 1/8	120	**PVL-B112618**	**PVL-B122618**
			PVL-C	Push-in Ø 8 mm	230	**PVL-C112608**	**PVL-C122608**
				G 1/4	230	**PVL-C112619**	**PVL-C122619**
				G 3/8	230	**PVL-C112613**	**PVL-C122613**
	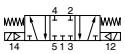	5/3 APB (All Ports Blocked)	PVL-B	Push-in Ø 6 mm	130	**PVL-B117606**	**PVL-B127606**
				G 1/8	130	**PVL-B117618**	**PVL-B127618**
			PVL-C	Push-in Ø 8 mm	250	**PVL-C117608**	**PVL-C127608**
				G 1/4	250	**PVL-C117619**	**PVL-C127619**
	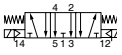	5/3 Vented centre	PVL-B	Push-in Ø 6 mm	130	**PVL-B118606**	**PVL-B128606**
				G 1/8	130	**PVL-B118618**	**PVL-B128618**
			PVL-C	Push-in Ø 8 mm	250	**PVL-C118608**	**PVL-C128608**
				G 1/4	250	**PVL-C118619**	**PVL-C128619**
		Double 3/2 Normally Closed (NC)	PVL-B	Push-in Ø 6 mm	130	**PVL-B115606**	**PVL-B125606**
				G 1/8	130	**PVL-B115618**	**PVL-B125618**

Tel: +45 63 12 83 00 | Email: ps@hymatik.com | www.hymatik.com | Hvidkaervej 27a, DK-5250 Odense SV, Denmark

Head and tail sets and intermediate supply modules

	Type of mounting	Description	Valve size	Port size	Weight (g)	Order code
	On DIN rail	Single air supply head and tail set	PVL-B	G1/4	175	**PVL-B1719**
			PVL-C	G3/8	195	**PVL-C1713**
		Dual air supply head and tail set	PVL-B	G1/4	245	**PVL-B1729**
			PVL-C	G3/8	285	**PVL-C1723**
	Surface	Single air supply head and tail set	PVL-B	G1/8	200	**PVL-B1818**
			PVL-C	G1/4	225	**PVL-C1819**
		Dual air supply head and tail set	PVL-B	G1/8	260	**PVL-B1828**
			PVL-C	G1/4	280	**PVL-C1829**
	On DIN rail	Intermediate supply module	PVL-B	G1/8	150	**PVU-LBB118**
			PVL-C	G1/4	200	**PVU-LCC119**
	On DIN rail	Kit for stacking PVL-B & PVL-C Including : - 1 transfert / take-off module - 1 PVL-C head module - 1 PVL-B end plate	PVL-C/B	G1/4-G1/8	640	**PVU-LCB119**

Air-pilot actuator for PVL-B and PVL-C valve

For use with PVL-B and PVL-C valve body

	Description	Pneumatic connection	Weight (g)	Order code
	Air-pilot actuator for PVL-B & PVL-C 15mm solenoid body	Push-in Ø 4 mm	7	**PVA-P111**
		Threaded M5	2	**PVA-P115**

15mm DIN Form C (8mm spacing) pilot solenoid valve

For use with PVL-B and PVL-C valve body

			Manual Overrides	Flush (Not Extended)		Extended	
			 Without Manual Override	Blue Override, non locking	Yellow Override, Locking	Blue Override, non locking	Yellow Override, Locking
	Voltage	W (g)	**Order code**	**Order code**	**Order code**	**Order code**	**Order code**
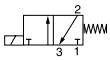 **Pins/Air Opposite (Pins UP)** 	12 Vdc	38	**P2E-KV32B0**	**P2E-KV32B1**	**P2E-KV32B2**	**P2E-KV32B3**	**P2E-KV32B4**
	24 Vdc	38	**P2E-KV32C0**	**P2E-KV32C1**	**P2E-KV32C2**	**P2E-KV32C3**	**P2E-KV32C4**
	48 Vdc	38	**P2E-KV32D0**	**P2E-KV32D1**	**P2E-KV32D2**	**P2E-KV32D3**	**P2E-KV32D4**
	24 Vac 50Hz	38	**P2E-KV31C0**	**P2E-KV31C1**	**P2E-KV31C2**	**P2E-KV31C3**	**P2E-KV31C4**
	48 Vac 50/60Hz	38	**P2E-KV34D0**	**P2E-KV34D1**	**P2E-KV34D2**	**P2E-KV34D3**	**P2E-KV34D4**
	115 Vac 50Hz 120 Vac 60 Hz	38	**P2E-KV31F0**	**P2E-KV31F1**	**P2E-KV31F2**	**P2E-KV31F3**	**P2E-KV31F4**
	230 Vac 50Hz 240 Vac 60 Hz	38	**P2E-KV31J0**	**P2E-KV31J1**	**P2E-KV31J2**	**P2E-KV31J3**	**P2E-KV31J4**

Parker Hannifin Corporation
Pneumatic Division - Europe

Tel: +45 63 12 83 00 | Email: ps@hymatik.com | www.hymatik.com | Hvidkaervej 27a, DK-5250 Odense SV, Denmark

Cable plugs 15 mm - IP65

(8mm pin spacing)



Connector schematic

No LED version

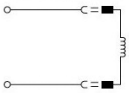

LED version

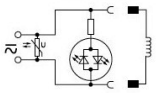

Description	Electrical protection	Cable length	Weight (g)	Order code
Large headed screw	No protection	No cable	16	**P8C-C**
For inaccessible or recess position	LED + Protection 24 VDC	No cable	16	**P8C-C26C**
Standard screw	No protection	No cable	11	**P8C-D**
		2 m cable	97	**P8L-C2**
		5 m cable	228	**P8L-C5**
	LED + Protection 24 VDC	No cable	11	**P8C-D26C**
	LED + Protection 24 VDC/AC	2 m cable	97	**P8L-C226C**
		5 m cable	229	**P8L-C526C**

Suppressor and LED indicators

For 8 mm solenoid pin spacing - For mounting between the solenoid valve and the cable plug



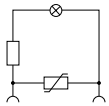

Symbol	Description	Pneumatic connection	Weight (g)	Order code
	LED indicator	24 VAC/DC	3	**P8V-CR26C**
		115 VAC 50 Hz - 120 VAC 60 Hz	3	**P8V-CR24F**
		230 VAC 50 Hz - 240 VAC 60 Hz	3	**P8V-CR24J**

Spare mounting and assembly kits



Description	Valve size	Port size	Weight (g)	Order code
Kit for sealing the inlet/exhaust common gallery including : - 3 common blanking plugs - 2 drilled and threaded rods - 2 screws for extended tie rod	PVL-B		35	**PVL-B1901**
	PVL-C		65	**PVL-C1901**

Tel: +45 63 12 83 00 | Email: ps@hymatik.com | www.hymatik.com | Hvidkaervej 27a, DK-5250 Odense SV, Denmark

Dimensions, PVL valve Series

All dimensions in mm unless otherwise stated

Stacking power valves 1/8" with pneumatic or electrical piloting - Monostable PVL-B1216••, PVL-B1236••

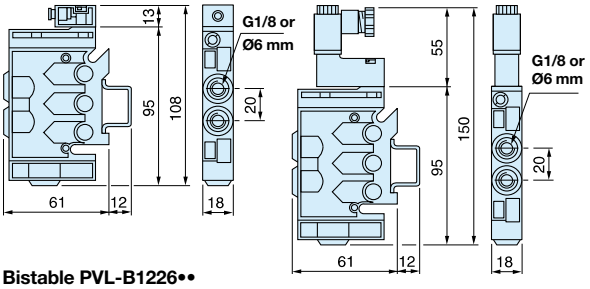

Bistable PVL-B1226••

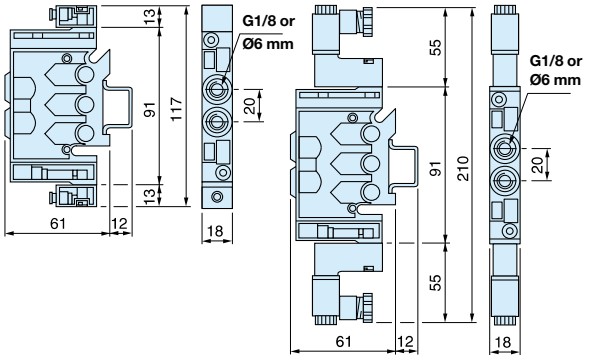

Stacking power valves 1/4" with pneumatic or electrical control - With 1 W solenoid actuator and suitable pneumatic connector - Monostable PVL-C1216••, PVL-C1236••

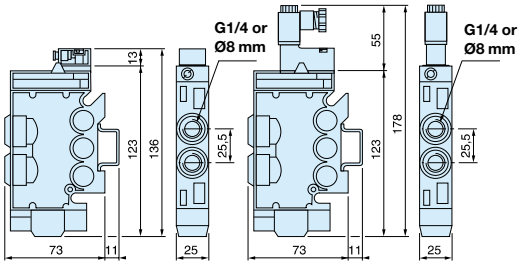

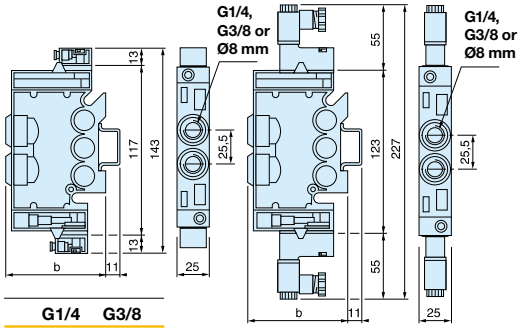

	G1/4	G3/8
b	73	77

Head and tail sets

Single air supply
PVL-B1719, PVL-C1713, mounting on DIN rail

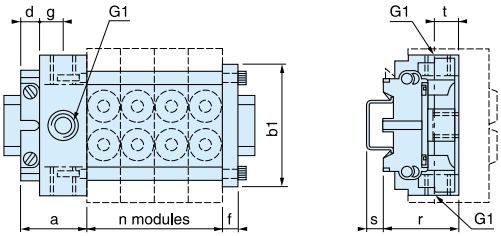

Dual air supply
PVL-B1729, PVL-C1723, mounting on DIN rail

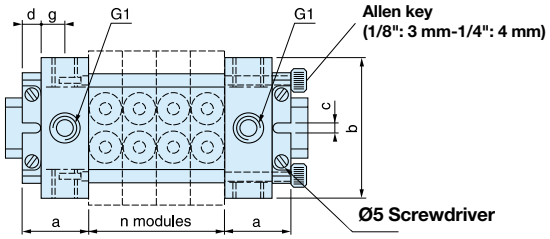

Single air supply
PVL-B1818, PVL-C1819, "stack mounting"

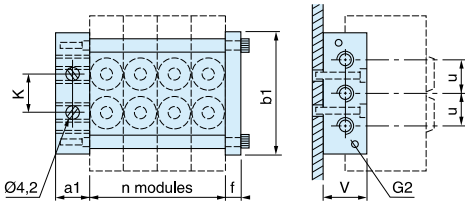

	a	a1	b	b1	c	d	f	g	G1	G2	k	r	s	t	u	v
1/8"	38	16	83	70	4,2	10	8	12	1/4"	1/8"	17,3	44	9	11	16	25
1/4"	38	20	108	100	4,2	10	8	12	3/8"	1/4"	63,5	55	9	13	20	30

"Transfer / take-off" module, intermediate supply module

For combination of sizes 1/4" - 1/8" - PVU-LCB119

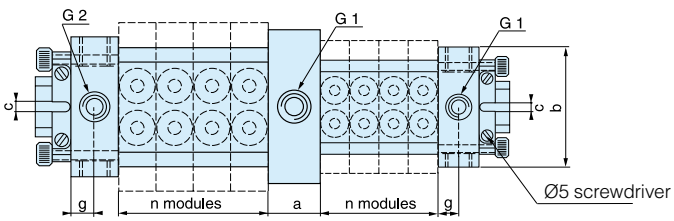

PVUL-BB118 - PVU-LCC119

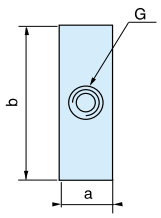

	a	b	G
1/8"	18	75	1/8
1/4"	25	100	1/4

Tel: +45 63 12 83 00 | Email: ps@hymatik.com | www.hymatik.com | Hvidkaervej 27a, DK-5250 Odense SV, Denmark

Miniature high-speed valves in stand alone, stackable or combined modules, incorporating standard logic functions. The range also includes timers and impulse modules.

- Complete range
- Stand alone, stackable or combinable modules
- Very fast response time
- Flexible and highly maintainable system
- DIN rail mounting
- Ø 4mm connection

For ATEX specific products contact Sales Office



Operating information

Working pressure	3 to 8 bar
Working temperature	-15 °C to 60 °C
Flow (Qmax)	180 l/min (PRD = 60 l/min)
ATEX approval:	CE Ex II 2 GD c 85°C

For more information see www.parker.com/euro_pneumatic

Logic sequencer

Step modules



	Order code
Without sub base Pneumatic output	**PSM-A10**
Visual indication of pneumatic output and manual override	**PSM-A12**
With sub base Wihtout manual overide	**PSM-B12**

Step module subbase



	Order code
Subbase	**PSB-A12**
Additional interlock	**PSV-A12**

Set of head and tail modules and deviation modules

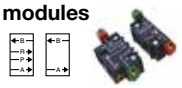

	Order code
Head & tail set	**PSE-A12**
Deviation standard	**PSD-A12**
Deviation for remote	**PSD-B12**

Logic elements

Line mounted elements

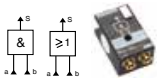

Logic Function	Order code
AND	**PLL-A11**
OR	**PLK-A11**
Clip on Din-rail	**PZM-L199**

Combinable elements

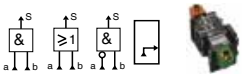

Logic Function	Order code
AND	**PLL-B12**
OR	**PLK-B12**
NOT	**PLN-B12**
INPUT	**PLE-B12**

Subbase mounted elements

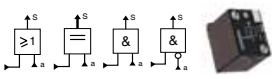

Logic Function	Order code
AND	**PLL-C10**
NOT inhibit standard	**PLN-C10**
NOT inhibit threshold	**PLN-D10**
OR	**PLK-C10**
YES regenerated	**PLJ-C10**

3 port subbase to be ordered separately.

Logic relays

Pressure switch

To be used with 3 port subbase

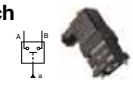

	Order code
With subbase	**PRE-A12**
Without subbase	**PRE-A10**

Amplifier relays

To be used with 4 port subbase

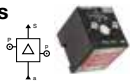

	Order code
With subbase	**PRD-A12**
Without subbase	**PRD-A10**

Memory relays

To be used with 4 port subbase



	Order code
With subbase	**PLM-A12**
Without subbase	**PLM-A10**

Sensor relays



	Order code
With subbase	**PRF-A12**
Without subbase	**PRF-A10**

Time delay relays

To be mounted on 3 port subbase



Function	Timing	Order code
Output after timed period	0,1 to 3s	**PRT-E10**
	0,1 to 30s	**PRT-A10**
	10 to 180s	**PRT-B10**
With subbase	0,1 to 30s	**PRT-A12**
Output during timed period	0,1 to 3s	**PRT-F10**
	0,1 to 30s	**PRT-C10**
	10 to 180s	**PRT-D10**

Subbase for logic elements and relays

3 port and 4 port subbases

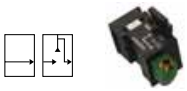

	Order code
Input module	**PZU-E12**
3 port "common input"	**PZU-A12**
3 port "cascade"	**PZU-C12**
4 port subbase*	**PZU-B12**

* For combination with memory relay and amplified relay.

Tel: +45 63 12 83 00 | Email: ps@hymatik.com | www.hymatik.com | Hvidkaervej 27a, DK-5250 Odense SV, Denmark

Dimensions, Logic processing

Modular sequencer

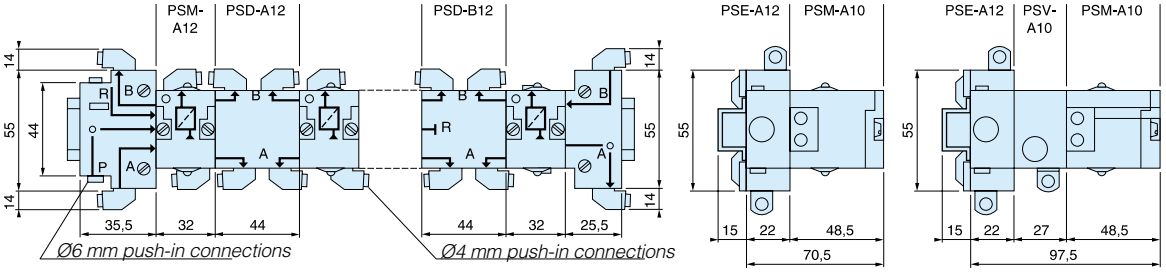

Line mounted logic elements

PLL-A11 and PLK-A11

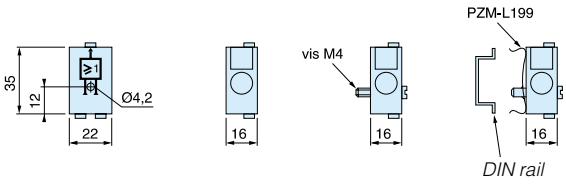

Combinable logic elements

PLE-B12 — PLL-B12 — PLK-B12 and PLN-B12

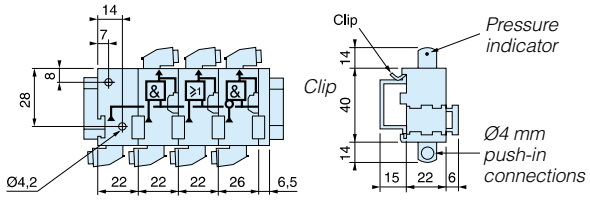

Logic elements mounted on 3-port modular subbases

PZU-E12

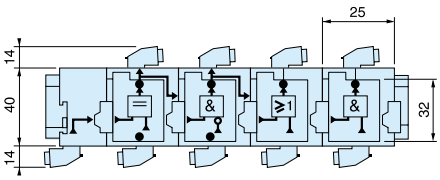

PLJ-C10 — PLN-C10 — PLK-C10 and PLL-C10 mounted on PZU-C12 and PZU-A12

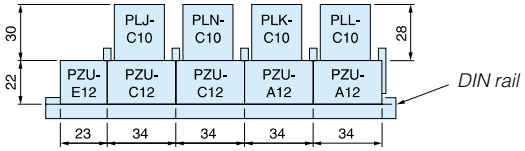

3 and 4-port modular subbases

PZU-E12 — PZU-C12 — PZU-A12 PZU-B12

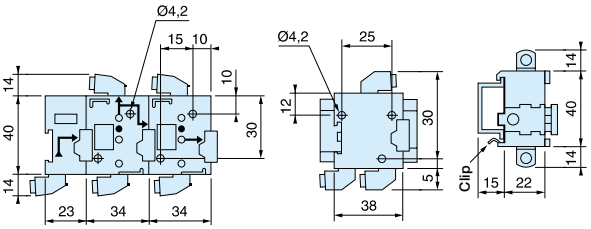

Relays mounted on 4-port modular subbases

PLM-A12 and PRD-A12

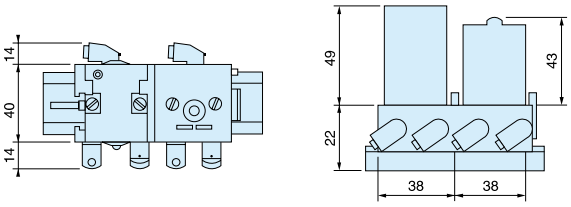

Relays mounted on 3-port modular subbases
PRT-A12 — PRF-A12 — PRE-A12 — PRS-A121 and PLN-D12

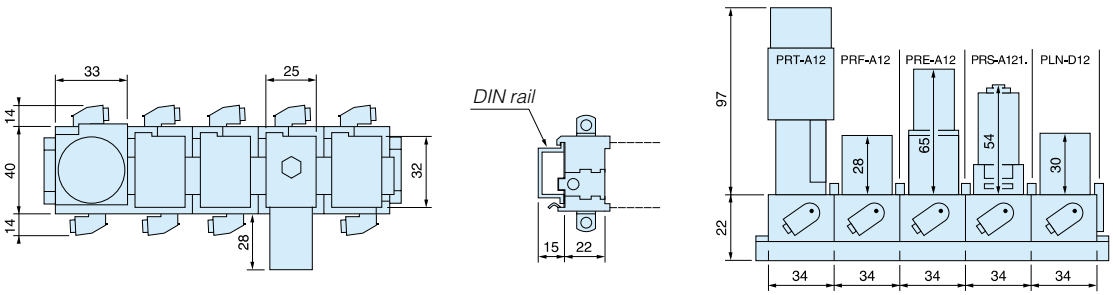

Totalising counters
PCT-A11 PCT-B11

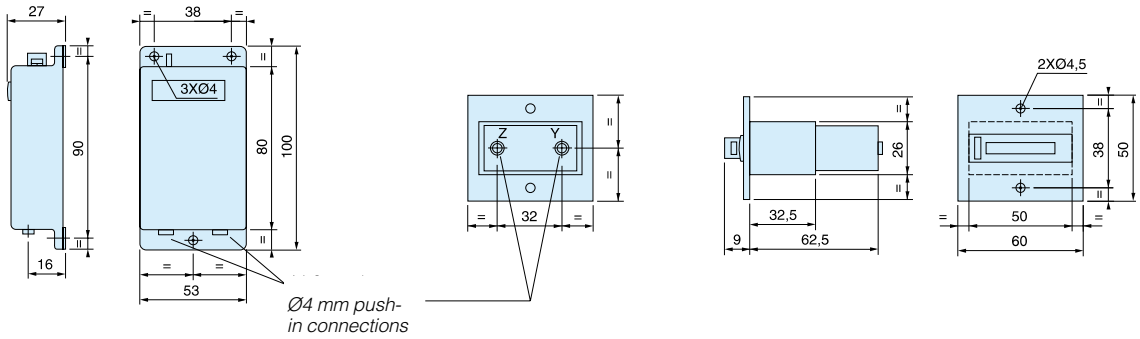

Digital display timers
PCM-A11 to PCM-B11

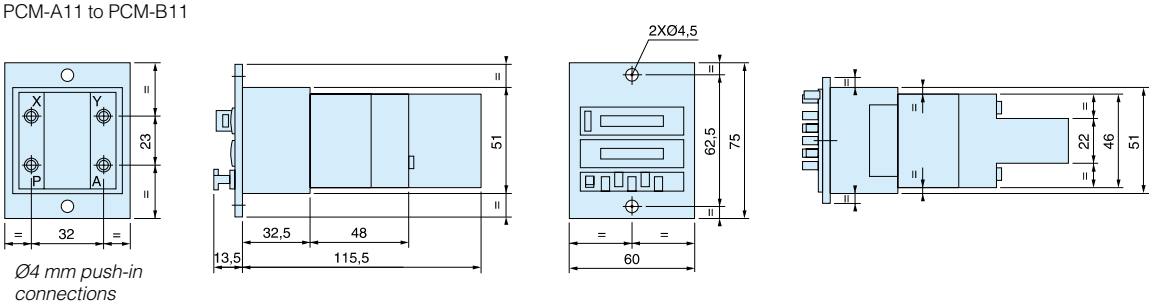

Timers with calibrated dial
PCM-F11 and PCM-G11

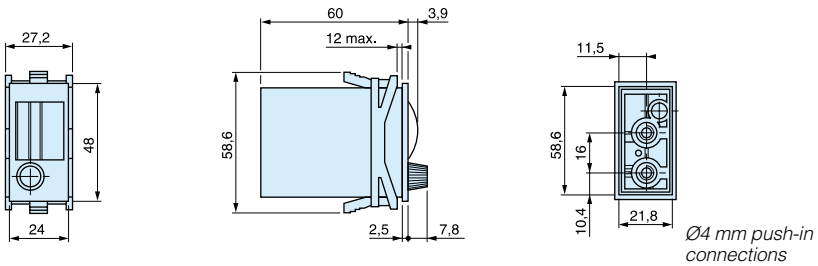

Air Saver Unit ASC/ASV Series

An easy solution to your environmental protection efforts!
The air saving unit contributes to power savings and CO2 reduction.



ASV2000



ASV5000

The air Saver Unit can reduce air consumption by up to 50% and improves blow efficiency in air blow applications.

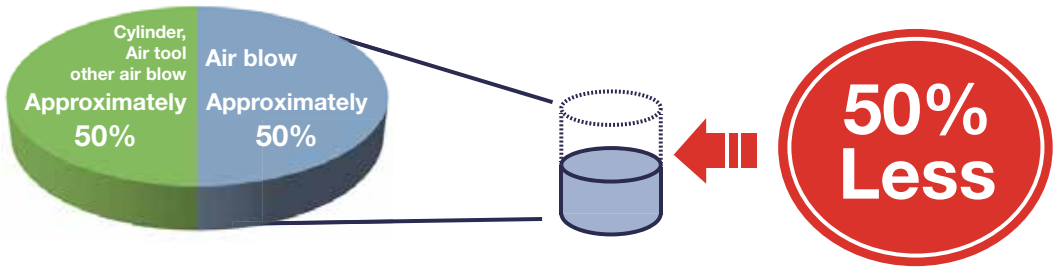

Savings example (Using 100 ASC500, Unit 8 hours/day and 20 days)

Power Consumption	53,600kW / month	➡	26,800kW / month
CO_2 discharge	17 t	➡	8.5 t
Cost	EUR 7,000 / month	➡	EUR 3,500 / month

Tel: +45 63 12 83 00 | Email: ps@hymatik.com | www.hymatik.com | Hvidkaervej 27a, DK-5250 Odense SV, Denmark

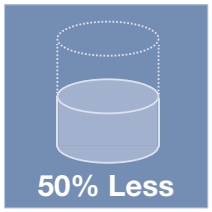









ASV200



ASC/ASO500

Pulsed air by Air Saver Unit reduces air consumption.

The Air saver unit is a valve that converts a continuous air blow to a pulsed air blow without the need for any other external control. Air is blown with a series of ON and OFF pulses. When the blow is OFF, there is no air consumption. This is how the air saver unit contributes to reduction in air consumption.

Continuous air blow

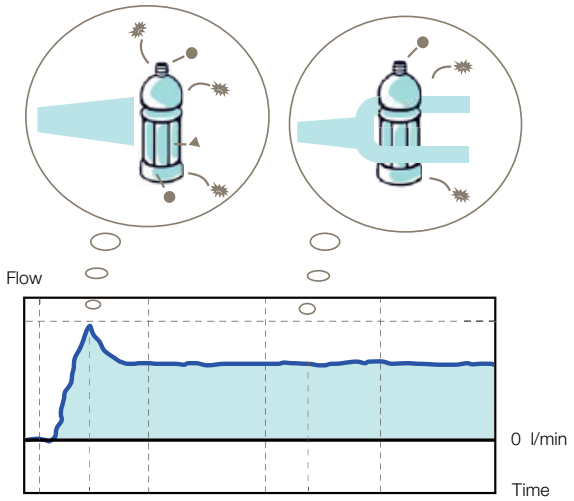

Pulsed air blow

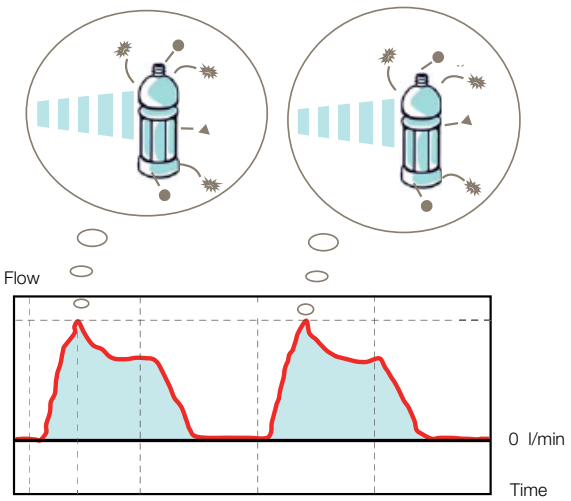

Compared to continuous air blow, the pulsed air blow hits the work repeatedly, improving the efficiency of the air blow.

Tel: +45 63 12 83 00 | Email: ps@hymatik.com | www.hymatik.com | Hvidkaervej 27a, DK-5250 Odense SV, Denmark

When an air saver unit is used, several positive effects can be expected. Air blow accounts for almost 50% of all compressed air used in plants. The air saver unit with a switching valve technology for air blow. Can reduce air consumption by up to 50% !

- Large reductions in plant air consumption.
- Savings in plant compressor power consumption.
- Reduction in plant CO_2 emissions.
- Big contribution to energy-saving activities.



Operating information

	ASV200	ASV2000	ASV5000	ASV13000	ASV15000	ASC500	ASO500
Function	Normally closed						Normally open
Fluid	Non lubricated air						
Flow l/min (ANR) (at 5 bar)	150	2000	5000	13000	15000	450	450
Port size (BSPP)	M5	3/8	1/2	1"	1 1/4"	1/8	1/8
Operating temperature	-5 to +50° C						
Pressure range (bar)	3 - 8	0 - 8				2 - 7	2 - 5
Pilot air supply (bar)	3 - 8	3 - 8				Internal pilot	
Blow	Pulse blow					Pulse/Continuous blow	
Rated voltage (V)	Electrical power is not necessary					DC 24 V	
Power consumption (W)	-					1.2 W	
Grade of Insulation	-					JIS grade E	
Permissible voltage fluctuation	-					± 10 %	
Wiring	-					e-CON standard 4 pole sockets	

(1) In case of using the Unit under 5°C, complete dry air by air dryer shall be supplied to prevent from freezing.
(2) Please note that supply air for port 1 should be more than 2 bar.
(3) Please note that supply air for port 1 should be more than 3 bar.

Order key

WP **AS** **V** **2000** **-** **AA** **-** **17**

Grease	
Blank	Standard grease
WP	Petrolatum grease (for painting applications.)

Series	
AS	Air Saver Unit

Operation method / Function	
V	Pneumatic operated Normally Closed.
C	Electrical actuated. Normal Close. (ASC500 only)
O	Electrical actuated. Normal Open. (ASO500 only)

Type / Flow rate	
200	2-position, internal air pilot / 200 liter/min
500	2-position, single solenoid / 500 liter/min
2000	2-position, external air pilot / 2000 liter/min
5000	2-position, external air pilot / 5000 liter/min
13000	2-position, extrenal air pilot / 13000 liter/min
15000	2-position, external air pilot / 15000 liter/min

Operation / Voltage	
AA	Pneumatic operated (WP)ASV200, 2000, 5000, ASV13000 and 15000)
1W	Electrical operated 24VDC (ASC/O500)

Port Size	
M5	M5 (ASV200 only)
10	BSPP 1/8 (ASC/O500 only)
17	BSPP 3/8 (ASV2000 only)
21	BSPP 1/2 (ASV5000 only)
34	BSPP 1 (ASV13000 only)
42	BSPP 1 1/4 (ASV15000 only)

Note: Cable with e-CON connector (Model No. ASC-D24-CL10) will be ordered separately.

Tel: +45 63 12 83 00 | Email: ps@hymatik.com | www.hymatik.com | Hvidkaervej 27a, DK-5250 Odense SV, Denmark

ASV200-AA-M5

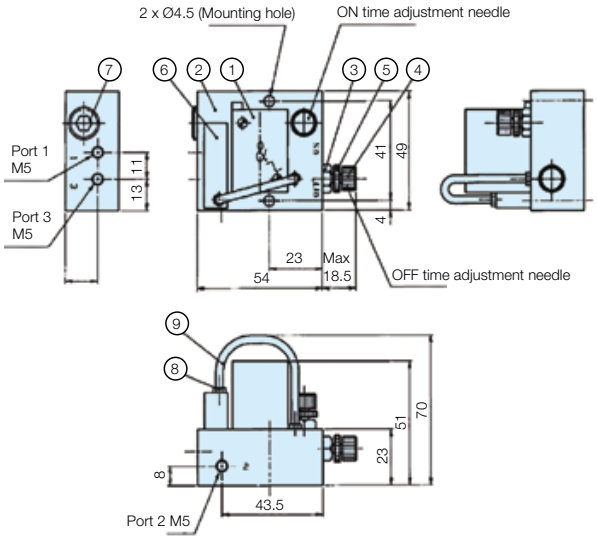

	Part name	Qty	Material treatment
1	PLN-D10	1	Assembly
2	Flicker base	1	Aluminium alloy
3	Cover	2	Brass
4	Needle	2	Aluminium alloy
5	Lock nut	2	Aluminium alloy
6	VCC232-NB-Z12-005	1	Assembly
7	Plug R1/4	1	Black oxide finish
8	BC-03-M3	2	Stainless
9	TN-3.2	8cm	Polyamide resin

ASC500-1W-10 / ASO500-1W-10

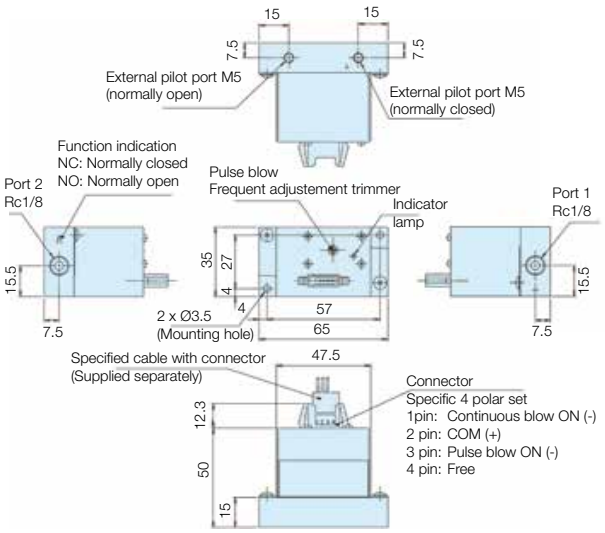

Pin no.	Colour
1	Black
2	Red
3	Yellow
4	(Free)



*Cable with specific connector "ASC-D24-CL10" (AWG26 ASC/ASO in common)

ASV2000

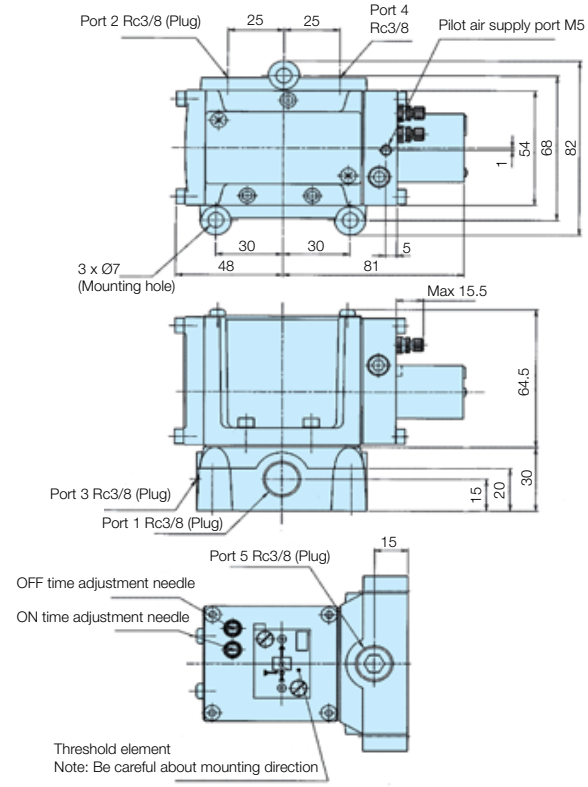

ASV5000

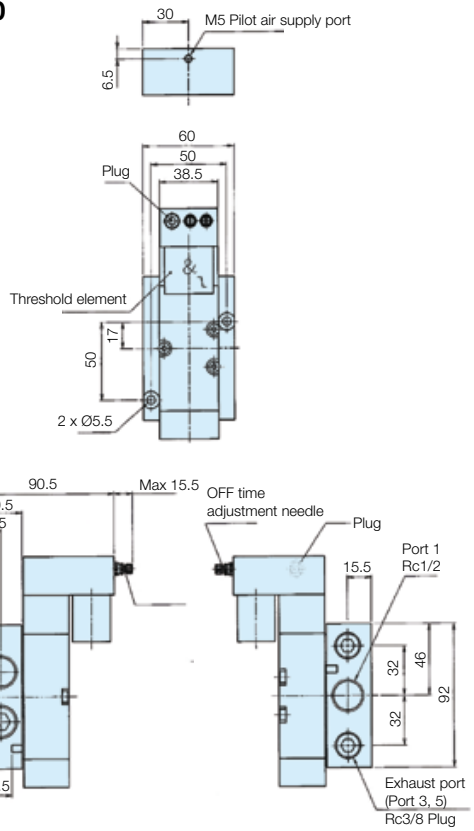

Tel: +45 63 12 83 00 | Email: ps@hymatik.com | www.hymatik.com | Hvidkaervej 27a, DK-5250 Odense SV, Denmark

ASV13000_AA_34

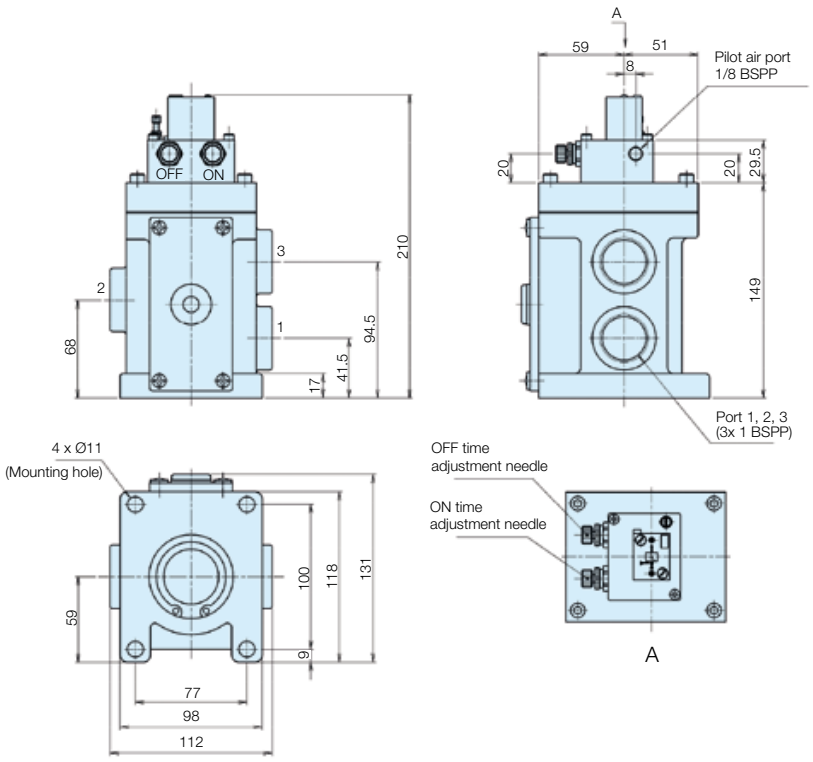

ASV15000_AA_42

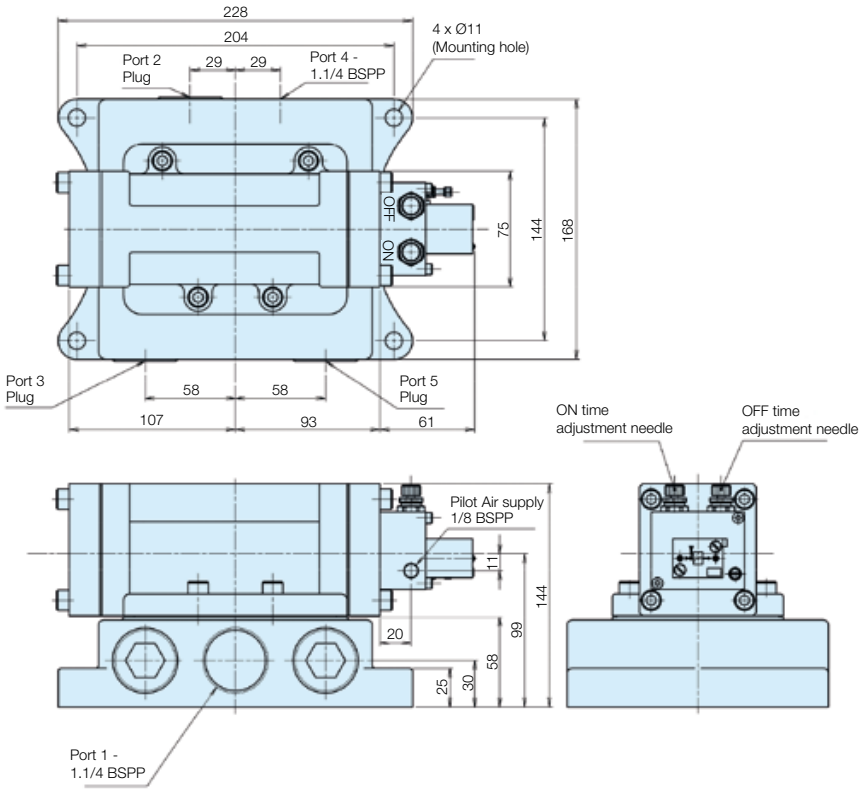

Designed to fit the standard electrical Ø22mm knock out, they can provide dual pneumatic and electrical output signals. A variety of button and switch actuators are available.

- Facia mounted operation
- 3/2 NO or NC
- Modular construction
- Wide range of actuators
- Dual pneumatic an electrical output signal



For ATEX specific products contact Sales Office

Flow characteristics

PXB-B3••	Qmax = 60 l/min Qn = 30 l/min
PXB-B4••	Qmax = 240 l/min Qn = 120 l/min
Connections	Ø 4 mm push-in

Operating information

Push button valves - Visual indicators

Working pressure	
PXB-B3••	1 to 9 bar
PXB-B4••	1 to 10 bar
PXV-••	1 to 8 bar
Working temperature	-15°C to +60°C
ATEX approval:	CE Ex II 3 GD

Spring return push buttons

Symbol	Flow	Order code
	60 l/min	**PXB-B3111BA2**
	240 l/min	**PXB-B4131BA2**

Black - With 1 NC valve

Symbol	Flow	Order code
	60 l/min	**PXB-B3111BA3**
	240 l/min	**PXB-B4131BA3**

Green - With 1 NC valve

Symbol	Flow	Order code
	60 l/min	**PXB-B3111BA4**
	240 l/min	**PXB-B4131BA4**

Red - With 1 NC valve

Mushroom head push buttons

Symbol	Flow	Order code
	60 l/min	**PXB-B3111BC2**
	240 l/min	**PXB-B4131BC2**

Black - Spring return - With 1 NC valve

Symbol	Flow	Order code
	60 l/min	**PXB-B3111BT4**
	240 l/min	**PXB-B4131BT4**

Red - Latching - With 1 NC valve

Selector switches

Symbol	Flow	Order code
	60 l/min	**PXB-B3111BD2**
	240 l/min	**PXB-B4131BD2**

Black - 2 positions - With 1 NC valve

Tel: +45 63 12 83 00 | Email: ps@hymatik.com | www.hymatik.com | Hvidkaervej 27a, DK-5250 Odense SV, Denmark

Additional switch valves, electrical contact block and mounting brackets

Symbol	Flow	Order code
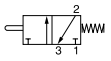	60 l/min NC	**PXB-B3911**
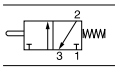	240 l/min NC	**PXB-B4931**
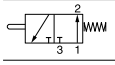	60 l/min NO	**PXB-B3921**
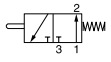	240 l/min NO	**PXB-B4931**
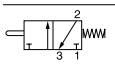	60 l/min NC	**PXB-B3912**
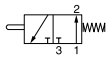	60 l/min NO	**PXB-B3922**

Symbol	Flow	Order code
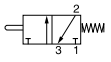	60 l/min NC	**PXB-B3111B**
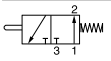	60 l/min NO	**PXB-B3121B**

	Contact	Order code
	Normally open NO	**ZBE-101**
	Normally closed NC	**ZBE-102**

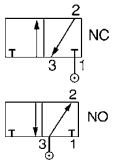

All PXB-B4 valves can be connected either as normally closed 3/2 valve (NC) or normally open 3/2 valve (NO) as required, by connecting the primary air supply to port 1 or port 3.

	Description	Order code
	Mounting block	**ZB4-BZ009**

Spring return push buttons

Spring return

	Colour	Order code
 Flush	Black	**ZB4-BA2**
	Green	**ZB4-BA3**
	Red	**ZB4-BA4**

Mushroom head

	Colour	Order code
 Ø40 mm spring return	Black	**ZB4-BC2**
	Green	**ZB4-BC3**
	Red	**ZB4-BC4**

Selector switches

Black handle

	Function	Order code
 Standard	2 positions fixed	**ZB4-BD2**
	3 positions fixed	**ZB4-BD3**

Visual indicators

	Colour actuated	Colour unactuated	Order code
	Green	Black	**PXV-F131**
	Red	Black	**PXV-F141**
	Yellow	Black	**PXV-F151**
	Blue	Black	**PXV-F161**
	White	Black	**PXV-F111**
	Green	Red	**PXV-F1314**

PXB-B3

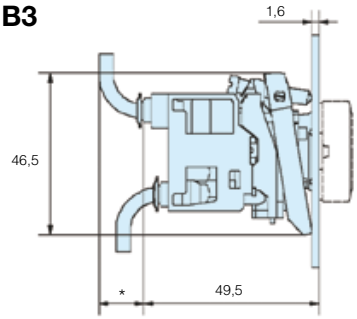

Body width 30mm
* With 2 x 4mm tube = 10
With 2,7 x 4mm tube = 15

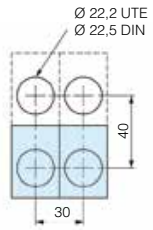

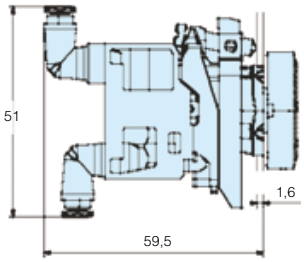

PXB-B4

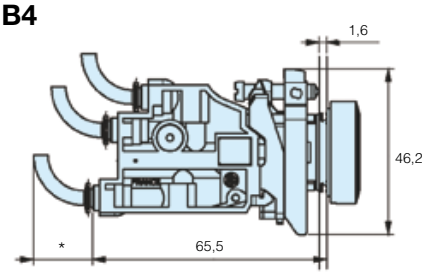

Body width 30mm
* With 2 x 4mm tube = 10
With 2,7 x 4mm tube = 15

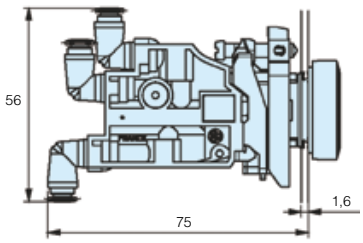

Tel: +45 63 12 83 00 | Email: ps@hymatik.com | www.hymatik.com | Hvidkaervej 27a, DK-5250 Odense SV, Denmark

Compact 3/2 normally closed metal bodied valves with push-in air connections. Designed for the process duty cycle with high durability. Ideal for the process or packaging industry.

- High durability
- Very good repeat accuracy
- Design for process duty cycle
- Push-in connection
- Versatile and easily maintained
- Miniature size

For ATEX specific products contact Sales Office



Operating information

Working pressure; PXC-M		3 to 8 bar		
Working temperature		-15 °C to +60 °C		
	PXC-M111	**PXC-M121**	**PXC-M521**	**PXC-M601**
Flow (Qmax):	60 l/min	85 l/min	250 l/min	250 l/min

For more information see www.parker.com/euro_pneumatic

Bore Ø1,5 mm, flow 60 Nl/min

Symbol	Actuator	Return at 6 bar, N	Operating forces	Order code
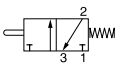	Steel plunger	Spring	11	**PXC-M111**

Bore Ø1,5 mm, flow 85 Nl/min

Symbol	Actuator	Return at 6 bar, N	Operating forces	Order code
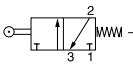	Plastic roller	Spring	4,5	**PXC-M121**
	Steel roller	Spring	4,5	**PXC-M131**

Bore Ø2,5 mm, flow 250 Nl/min

Symbol	Actuator	Return at 6 bar, N	Operating forces	Order code
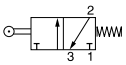	Plastic roller	Spring	7	**PXC-M521**

3/2 compact limit switches -

With Ø4mm Push-in connections with pipeable exhaust port

Bore Ø2,5mm, flow 250 Nl/min - With plunger head

Symbol	Actuator	Return at 6 bar, N	Operating forces	Order code
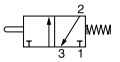	Steel plunger	Spring	24	**PXC-M601A110**
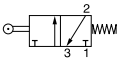	Steel roller plunger	Spring	24	**PXC-M601A102**
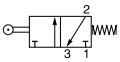	90° Steel roller plunger	Spring	24	**PXC-M601A103**

Dimensions, Limit switches, Series PXC

All dimensions in mm unless otherwise stated

3/2 miniature limit switches

PXC-M111 **PXC-Z12** **PXC-Z11**

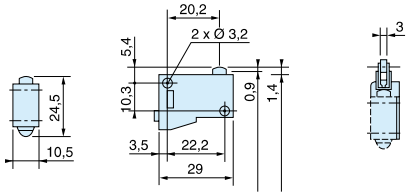

PXC-M121 - PXC-M131 **PXC-M521**

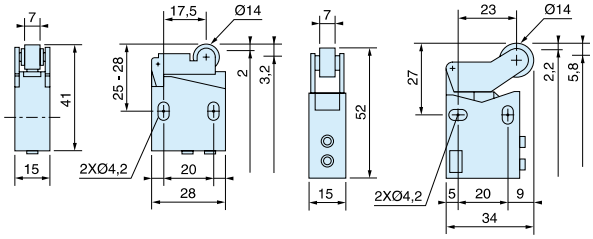

3/2 compact limit switches

PXC-M601A102 **PXC-M601A103**

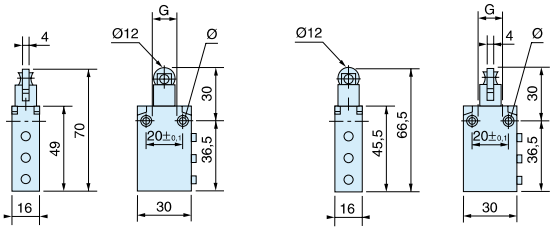

PXC-M601A110

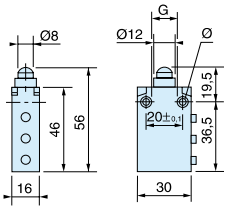

Tel: +45 63 12 83 00 | Email: ps@hymatik.com | www.hymatik.com | Hvidkaervej 27a, DK-5250 Odense SV, Denmark

Ergonomically designed units to provide protection against accidental operation of machines. Completely sealed units prevent tampering and comply with latest European safety standards.

- Ergonomic design
- Robust polymer or metal enclosure
- Meets requirements for protection against accidental operation and tampering
- Metal enclosure features a wrist-rest bar which helps prevent illness due to repetitive actions
- Conforms to EN574 and EN954-1 requirements



Operating information

Working pressure	3 to 8 bar
Working temperature	-5 °C to +60 °C

For more information see www.parker.com/euro_pneumatic

Control module only

Symbol	Connections	Order code
	Ø4 mm Push-in	**PXP-A11**

Complete units

Polymer enclosure, with two Ø40 mm push button with protective guards and control module

Symbol	Connections	Number of control modules	Order code
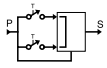	Ø4 mm Push-in	1	**PXP-C111**
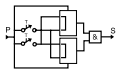	Ø4 mm Push-in	2	**PXP-D121**

Metal enclosure, with two Ø60 push buttons, wrist restbar, built in protective guard and control module

Symbol	Connections	Number of control modules	Order code
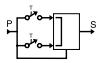	Push-in Ø6 mm for supply Ø4 mm for output	1	**PXP-S111**
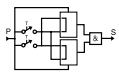	Push-in Ø6 mm for supply Ø4 mm for output	2	**PXP-S121**

Dimensions

PXP-A11

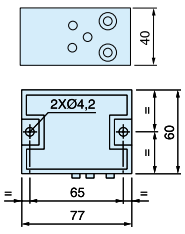

PXP-C111 and PXP-D121

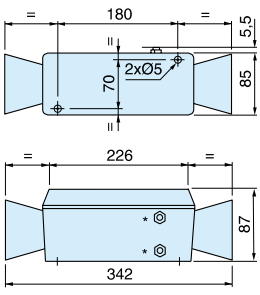

* Ø4 mm push-in connections
** Ø6 mm push-in connections

PXP-S111 and PXP-S121

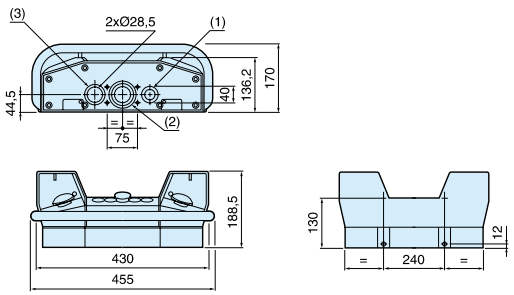

Tel: +45 63 12 83 00 | Email: ps@hymatik.com | www.hymatik.com | Hvidkaervej 27a, DK-5250 Odense SV, Denmark

- 12 mm solenoids sub-base mounting type
- Instant push-in fittings for inlet (Ø 8 mm) and outlets (Ø 4 mm)
- Brass silencer
- Quick response time
- Multi-functional manual override



Operating Information

Working pressure	0,9 to 8 bar
Power DC	1 W
Voltage	24 VDC
Voltage tolerance	+/- 10 %
Electrical connection	M8
Flow rate at 6 bar input, 1 bar pressure drop	15Nl/min
Valve function	3/2 NC
Response time	5 ms
Frequency	200 cycles/min

Materials

Manifold complete :	Polyamide	Aluminium
Armature tube:	Brass	Stainless steel
Plunger & core:	Corrosion resistant	Cr-Ni steel
Seals:	FKM (Viton™)	Low temp FKM
Screws:	Zinc plated	Stainless steel

Coil

Encapsualtion material:	Thermoplastic as standard thermoset resin for M12 connection

Order codes



Designation		Weight (kg)	Order code
5 stations manifold complete		0,130	**P2DFIX5PC**
6 stations manifold complete		0,155	**P2DFIX6PC**
Electrical connector *	2 m	-	**P8LS08L226C**
	5 m	-	**P8LS08L526C**
	9 m	-	**P8LS08L926C**

* Clip-on individual electrical connector, for each solenoid pilot, IP67 protected,including LED, voltage surge protection and flying lead cable

Dimensions (mm)

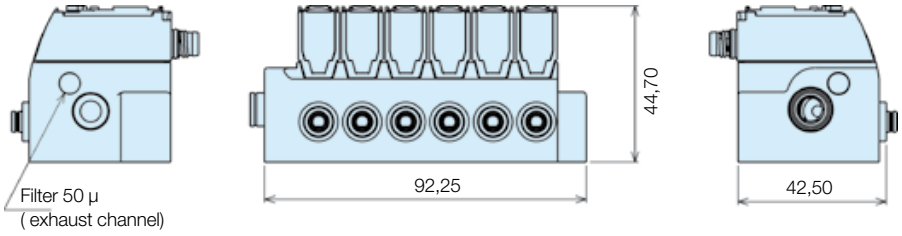

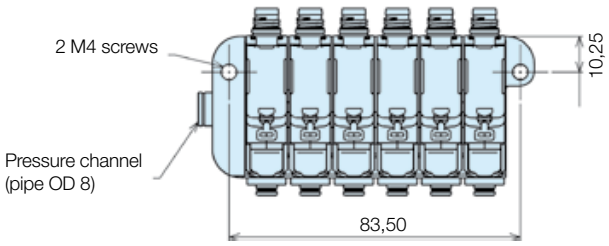

Parker Hannifin Corporation
Pneumatic Division - Europe

Solenoid operators - 15 mm

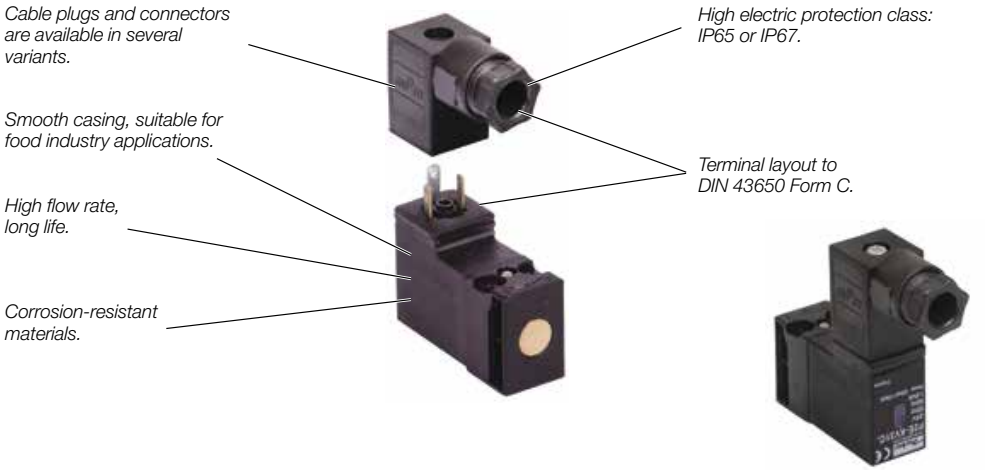

The P2E- •V solenoid operator range

The P2E-•V range of operators are normally closed (NC) 3/2 solenoid valves, with exceedingly compact dimensions in relation to their capacity.

International standard
The port connection pattern complies with a new French CNOMO standard (in process of drafting), with cable plug connections in accordance with DIN 43650 Form C.

Compact design
Overall dimensions of the P2E-•V operators are substantially less than those of earlier generations of solenoid operators.

High flow capacity
High flow capacity relative to the electrical operating power as a result of optimised internal flow paths.

Corrosion-resistant design
The valve is made of thermoplastic material and stainless steel, with Viton™ and nitrile rubber seals for excellent corrosion resistance.

Clean lines suitable for food industry applications, P2E-QV
The valve has been designed in conjunction with several machine manufacturers and organisations in the food processing industry, with corrosion-resistant materials and smooth lines being important starting points. The valve and its accessories have been designed so that there are no gaps or crevices in which dirt could collect.

High reliability
Few moving parts result in high reliability, rapid changeover and very long life.

Low power demand
The solenoids have a power demand of 1.2 W at 24 VDC and 1.6 VA at 24 VAC, 115 V AC and 230 VAC.

High protection class
The protection class is IP 67 when connected using the cable plug with a moulded cable. When using the standard cable plug for fitting by the user, the protection class is IP65, the valve, with Fast-on connectors, has an encapsulation class of IP 20.

Insensitive to dirty air
The use of generously sized flow paths (1.0 mm diameter) means that the valve can be used in normal industrial environments without problems of blocking.

Manual override as option
The operators can be supplied with our without manual override. The manual override device is available as a screwdriver groove or with a control arm, and is either spring return (blue) or lockable (yellow).

Tel: +45 63 12 83 00 | Email: ps@hymatik.com | www.hymatik.com | Hvidkaervej 27a, DK-5250 Odense SV, Denmark

Order key, solenoid operators (15mm)

P 2 E - | Q | V | 3 | 2 | C | 3

	Valve family
P2E	Solenoid operator

	Subfamily
	Solenoid operator, 15 mm wide Electric connection acc. to ISO 15217 Form C El/supply connection on opposite side
K	Standard version
M	Mobile version
Q	Food industry version
H	Hight flow

	Valve type / Function
3	3/2 valve,normally closed (NC)
1	3/2 valve,normally opened (NO)

	Type of current
1	AC 50 Hz
2	DC
4	AC 50/60 Hz
5	Mobile and wide band only

	Voltage
B	12 V
C	24 V
D	48 V
F	115 V*
J	230 V*
W	37,5 V**
T	72 V**
Y	78 V**
V	96 V**
E	110 V**

	Overriders
0	Without
1	Non locking (blue)
2	Locking (yellow)
3	Extended non locking (blue)
4	Extended locking (yellow)

* For standard and food type only
** For mobile "M" version only

Technical data

	NC, Standard	NC, Food[1]	NC, Mobile[2]	NC, Hight flow
Working pressure	0 to10 bar	0 to 10 bar	0 to 10 bar	0 to 10 bar
Working temperature	-15 °C to +60 °C	-15 °C to +60 °C	-40 °C to +70 °C	-15 °C to +50 °C
Orifice	1,0 mm	1,0 mm	1,0 mm	1,4 mm
Flow Qmax	33 Nl/min	33 Nl/min	22 Nl/min	50 Nl/min
Power, hold	DC 1,2 W / AC 1,6 VA *	DC 1,2 W / AC 1,6 VA *	DC 1,4 W	DC 1,8 W / AC 2,4 VA
Power, surge	DC 1,2 W / AC 3,5 VA *	DC 1,2 W / AC 3,5 VA *	DC 1,4 W	DC 1,8 W / AC 5,5 VA
Connection time	100%	100%	100%	100%
Voltage tolerance	+10%/–15%	+10%/–15%	+25%/–30%	+10%/–15%

Electric connection:	DIN 43650 Form C
Port pattern:	To future CNOMO standard
Protection:	IP 65
Approval:	Standard solenoids are UL 429 recognized and marked with the following symbol
Working media:	All neutral media, such as compressed air, water, hydraulic oil and many gases.
1) Design:	Completely smooth exterior, suitable for food industry.
2) Mobile standard	According to European standard EN 50 155.

* Power , hold for 230VAC 2.4VA
Power, surge for 230VAC 5.5VA

Transients

Interrupting the current through the solenoid coil produces momentary voltage peaks which, under unfavourable conditions, can amount to several hundred times the rated operating voltage. Normally, these transients do not cause problems, but to achieve the maximum life of relays in the circuit (and particularly of transistors, thyristors and integrated circuits) it is desirable to provide protection by means of voltage-dependent resistors (varistors). All cable plugs with a yellow LED also incorporate such protection.

Service life

With compressed air at 6 bar, 20 °C and complying with the requirements for compressed air quality as set out in ISO8573-1 norm (class 4 for dry and class 5 for filtered air), the valves should have a life of at least 50 million cycles.

Materials

Operator

Body, coil casing	Thermoplastic
Internal metal parts	Steel
Screws	Stainless steel
Bottom plug	Thermoplastic
Sealing materials	FPM (Viton™) and nitrile rubber

Cable head

Sheath	Thermoplastic
Retaining screw	Stainless steel, zinc-plated steel

Solenoid Operators - 15 mm

Electrical connection EN175301-803 C/ISO15217 (Ex DIN 43650C)

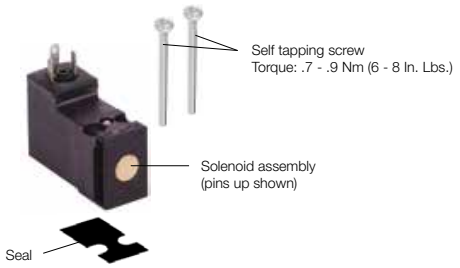

Solenoids 15 mm NC, standard

(Note! Mounting screws included in basic valve)

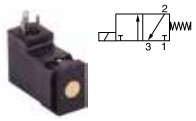

Voltage	Weight kg	Order code Without manual override	Weight kg	Order code Override, blue, non locking flush	Weight kg	Order code Override, yellow, locking flush
12 VDC	0,038	**P2E-KV32B0**	0,038	**P2E-KV32B1**	0,038	**P2E-KV32B2**
24 VDC	0,038	**P2E-KV32C0**	0,038	**P2E-KV32C1**	0,038	**P2E-KV32C2**
48 VDC	0,038	**P2E-KV32D0**	0,038	**P2E-KV32D1**	0,038	**P2E-KV32D2**
24 VAC 50Hz	0,038	**P2E-KV31C0**	0,038	**P2E-KV31C1**	0,038	**P2E-KV31C2**
48 VAC 50/60Hz	0,038	**P2E-KV34D0**	0,038	**P2E-KV34D1**	0,038	**P2E-KV34D2**
115 VAC 50Hz/ 120 VAC 60Hz	0,038	**P2E-KV31F0**	0,038	**P2E-KV31F1**	0,038	**P2E-KV31F2**
230 VAC 50Hz/ 240 VAC 60Hz	0,038	**P2E-KV31J0**	0,038	**P2E-KV31J1**	0,038	**P2E-KV31J2**



Voltage	Weight kg	Order code Override extended, blue, non locking flush	Weight kg	Order code Override extended, yellow, locking flush
24 VDC	0,038	**P2E-KV32C3**	0,038	**P2E-KV32C4**
24 VAC 50Hz	0,038	**P2E-KV31C3**	0,038	**P2E-KV31C4**

Solenoids 15 mm NC, mobile

(Note! Mounting screws included in basic valve)



Voltage	Weight kg	Order code Without manual override	Weight kg	Order code Override, blue, non locking flush
12 VDC	0,038	**P2E-MV35B0**	0,038	**P2E-MV35B1**
24 VDC	0,038	**P2E-MV35C0**	0,038	**P2E-MV35C1**
37,5 VDC	0,038	**P2E-MV35W0**	0,038	**P2E-MV35W1**
48 VDC	0,038	**P2E-MV35D0**	0,038	**P2E-MV35D1**
72 VDC	0,038	**P2E-MV35T0**	0,038	**P2E-MV35T1**
78 VDC	0,038	**P2E-MV35Y0**	0,038	**P2E-MV35Y1**
96 VDC	0,038	**P2E-MV35V0**	0,038	**P2E-MV35V1**
110 VDC	0,038	**P2E-MV35E0**	0,038	**P2E-MV35E1**

Solenoids 15 mm NC, food industry version

(Note! Mounting screws included in basic valve)

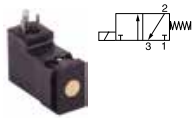

Voltage	Weight kg	Order code Without manual override	Weight kg	Order code Override, blue, non locking flush	Weight kg	Order code Override, yellow, locking flush
24 VDC	0,038	**P2E-QV32C0**	0,038	**P2E-QV32C1**	0,038	**P2E-QV32C2**
48 VDC	0,038	**P2E-QV32D0**	0,038	**P2E-QV32D1**	0,038	**P2E-QV32D2**
24 VAC 50Hz	0,038	**P2E-QV31C0**	0,038	**P2E-QV31C1**	0,038	**P2E-QV31C2**
48 VAC 50/60Hz	0,038	**P2E-QV34D0**	0,038	**P2E-QV34D1**	0,038	**P2E-QV34D2**
115 V 50Hz/ 120 V 60Hz	0,038	**P2E-QV31F0**	0,038	**P2E-QV31F1**	0,038	**P2E-QV31F2**
230 VAC 50Hz/ 240 VAC 60Hz	0,038	**P2E-QV31J0**	0,038	**P2E-QV31J1**	0,038	**P2E-QV31J2**



Voltage	Weight kg	Order code Override extended, blue, non locking flush	Weight kg	Order code Override extended, yellow, locking flush
24 VDC	0,038	**P2E-QV32C3**	0,038	**P2E-QV32C4**
24 VAC 50Hz	0,038	**P2E-QV31C3**	0,038	**P2E-QV31C4**
115 VAC 50 Hz	0,038	**P2E-QV31F3**	0,038	**P2E-QV31F4**
230 VAC 50 Hz	0,038	**P2E-QV31J3**	0,038	**P2E-QV31J4**

In accordance with the EU Machine Directive, EN 983, solenoid valves with manual override should have spring-return operating arms for safety.

Tel: +45 63 12 83 00 | Email: ps@hymatik.com | www.hymatik.com | Hvidkaervej 27a, DK-5250 Odense SV, Denmark

2/2-Way Direct Operated Valve



General application valves for dry or lubricated air, neutral gases and liquids

Description:
- 2/2-Way Direct Operated Valve - Normally Closed.
- Coil IP65 for 2 P + E plug according to DIN 43650 type A
- Power Consumption 8W (AC), 9W (DC).

Applications:
- Shut-off and control (On-Off) of water, air, light oils, steam and inert gases
- Humidifiers, welding systems, industrial washing machines, automatic dispensers, diesel oil burners, sterilizers, compressors.

Temperature Range:
- Min: -10°C I Max: see table

Seals Material:
- See table

Advantages:
- Versatile product for many 2/2 NC valve requiring applications, robust design.

Port size	Orifice	K_v	Admissible differential pressure (bar)			Fluid Temp.	Seal Material	Reference number			Options
G	mm	l/min	Min.	Max. DC	Max. AC	C°		Valve	Housing	Coil	
2/2-Way Direct Operated Valve											Normally CLOSED
1/8”	2.5	3.50	0	10.0	28.0	100°C	Ruby[1]	E121K23	2995	481865	-
1/8”	3.0	4.50	0	7.0	10.0	100°C	FKM	121K1302	2995	481865	-
1/4”	1.2	0.85	0	36.0	80.0	100°C	Ruby[1]	E121K65	2995	481865	-
1/4”	1.5	1.50	0	25.0	60.0	75°C	PCTFE	E121K04	2995	481865	-
1/4”	1.5	1.50	0	25.0	60.0	100°C	Ruby[1]	E121K67	2995	481865	-
1/4”	1.5	1.50	0	20.0	20.0	100°C	FKM	E121K0402	2995	481865	-
1/4”	2.5	3.50	0	10.0	28.0	75°C	PCTFE	E121K07	2995	481865	-
1/4”	2.5	3.50	0	7.0	14.0	100°C	FKM	121K0706	2995	481865	-
1/4”	2.5	3.50	0	10.0	28.0	100°C	Ruby[1]	E121K63	2995	481865	-
1/4”	3.0	4.50	0	7.0	20.0	75°C	PCTFE	E121K03	2995	481865	-
1/4”	3.0	4.50	0	7.0	10.0	100°C	FKM	E121K0302	2995	481865	-
1/4”	3.0	4.50	0	7.0	10.0	100°C	EPDM	121K0323	2995	481865	-
1/4”	3.0	4.50	0	7.0	10.0	100°C	FKM	E121K0352	2995	481865	**
1/4”	3.0	4.50	0	7.0	20.0	100°C	Ruby[1]	E121K64	2995	481865	-
1/4”	4.0	7.50	0	4.0	10.0	100°C	FKM	121K02	2995	481865	-
1/4”	4.0	7.50	0	4.0	10.0	100°C	FKM	121K0250	2995	481865	**
1/4”	5.0	11.00	0	2.0	7.0	100°C	FKM	121K01	2995	481865	-
1/4”	5.0	11.00	0	2.0	7.0	100°C	EPDM	121K0103	2995	481865	-
1/4”	5.0	11.00	0	2.0	7.0	100°C	FKM	121K0150	2995	481865	**
1/4”	5.0	11.00	0	2.0	7.0	100°C	FKM	121K3106	2995	481865	-
3/8”	4.0	7.50	0	4.0	10.0	100°C	FKM	121K3206	2995	481865	-
3/8”	6.0	12.00	0	1.1	5.0	100°C	FKM	121K3303	2995	481865	-
3/8”	6.0	12.00	0	1.1	5.0	100°C	FKM	121K3306	2995	481865	-
1/2”	8.5	25.00	0	0.5	1.1	100°C	FKM	E121K46	2995	481865	-
1/2”	11.0	36.00	0	0.3	0.7	100°C	FKM	E121K45	2995	481865	-

[1] Valve with Ruby seal is only compatible with hydraulic oil and neutral liquids

** Manual override standard

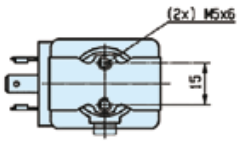

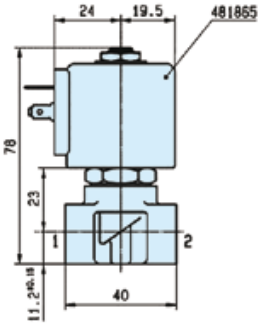

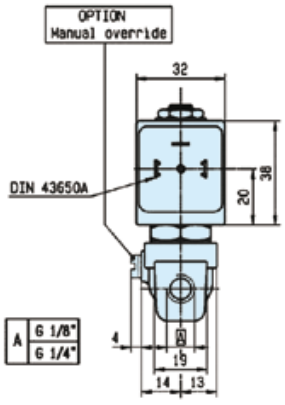

Tel: +45 63 12 83 00 | Email: ps@hymatik.com | www.hymatik.com | Hvidkaervej 27a, DK-5250 Odense SV, Denmark

2/2 & 3/2 Solenoid Valves for High Pressure pneumatic applications - 40 bar



Product offering:

- 2/2 valves and 3/2 way valves - pilot operated
- Pipe mounting (G 1/2- 3/4) or sub-base mounting
- 1.5 (2) - 40 bar
- Normally open or closed
- Internal or external pilot pressure supply

Customer Value Proposition:

- Safety of operation
- Reliability
- Response time stability
- Repeatability
- No leakage
- Integrated non return valve (421version)



The use of high pressure gases became a necessity in the new technologies developed during the last years.

The control of these fluids can be done through the solenoid valves specially designed by Parker Lucifer for high pressure applications (maximum 50 bar).

The **life expectancy of several millions** of cycles, with **response time of few milliseconds**, allows the use of these valves on intensive applications and on high technology machines, as the plastic bottle blowing machines, or the laser cutting machines.

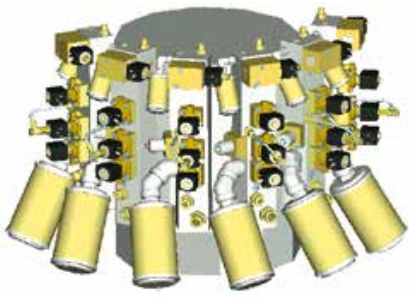

Parker Lucifer also develops special valves or adapted blocks upon specific customers needs. Please contact your agent for more information.

Tel: +45 63 12 83 00 | Email: ps@hymatik.com | www.hymatik.com | Hvidkaervej 27a, DK-5250 Odense SV, Denmark

Application Example

Main Technical Specifications

Function

2/2 pilot operated: Normally closed (with internal pilot pressure) 321H/F type
Normally closed (with external pilot pressure) 421H/F type
Normally open (with internal pilot pressure) 322H/F type

3/2 pilot operated: normally closed (with internal pressure) 331B type

ISO diagram

321H/F 322H/F 421H/F 331B

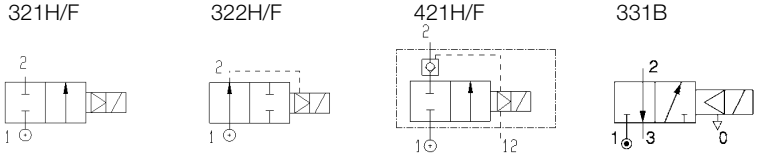

Mounting

- For direct pipe mounting G 1/2" or 3/4" (2/2 Valve type H); G 1/4 (3/2 Valve type B)
- For sub-base mounting (type F)

Nominal diameter

15 mm (type H), 14 mm (type F)

Pressures

For the version with external pilot pressure, the pilot pressure must always be higher than the controlled pressure

External Leakage

0 Ncc/min.

Internal Leakage

< 20 Ncc/min.

Fluids

Dry lubricated or non lubricated air, Argon, Nitrogen.
Oxygen on request

Proof pressure

200 bar

Filtration

< 1 µm

Life expectancy

> 2 10^6 cycles (dry and clean air)
> 8 10^6 cycles (lubricated air)

Temperatures

Ambient / fluid mini: -10 °C
Ambient / fluid maxi: +50 °C

Materials specifications

Body/cover:	2/2 Valves: Brass - 3/2 Valves: Aluminium
Pilot seals :	PUR
Main seals :	FKM (Viton®) with isolating diaphragm from PUR
Tube and plunger :	Stainless steel
Coil :	Encapsulation from PA66 + 30% fiber glass

Options

Δp maxi 50 bar on request

Response Time

Depends on application

Mounting Position

Indifferent

Specials

Parker Lucifer also develops special valves or adapted blocks upon specific customers needs.
Please contact your agent for more information.

Tel: +45 63 12 83 00 | Email: ps@hymatik.com | www.hymatik.com | Hvidkaervej 27a, DK-5250 Odense SV, Denmark

Port size	Orifice	Flow Factor (l/min)	Admissible differential pressure (bar)			Fluid Temp.	Seal Material (C°)	Reference number				Dim. Ref. N°
G	mm	Gaz Qn	Min.	Max. DC	Max. AC	Gaz Max.		Global Ref. No.	Valve	Housing	Coil	
2/2 Valves - Direct Pipe Mounting												Normally CLOSED
1/2"	15	3150	1.5	40	40	50	FKM	-	321H35	2995	481865	1
3/4"	15	3550	1.5	40	40	50	FKM	-	321H36	2995	481865	1
2/2 Valves - Direct Pipe Mounting												Normally OPEN
1/2"	15	3150	1.5	40	40	50	FKM	-	322H35	2995	481865	2
3/4"	15	3550	1.5	40	40	50	FKM	-	322H36	2995	481865	2
2/2 Valves - Direct Pipe Mounting							External Pilot					Normally CLOSED
1/2"	15	3150	2	40	40	50	FKM	-	421H35	2995	481865	3
3/4"	15	3550	2	40	40	50	FKM	-	421H36	2995	481865	3
2/2 Valves - Sub-base Mounting												Normally CLOSED
-	14	2100	1.5	40	40	50	FKM	-	321F35	2995	481865	4
-	22	7000	5	40	40	50	FKM	-	321F37	2995	481865	-
2/2 Valves - Sub-base Mounting												Normally OPEN
-	14	2100	1.5	40	40	50	FKM	-	322F35	2995	481865	5
-	22	7000	1.5	40	40	50	FKM	-	322F37	2995	481865	-
2/2 Valves - Sub-base Mounting							External Pilot					Normally CLOSED
-	14	2100	2	40	40	50	FKM	-	421F35	2995	481865	6
3/2 Valves - Direct Pipe Mounting												Normally CLOSED
1/4"	8	750	1	40	40	50	PUR	-	331B31	2995	481865	7
3/2 Valves - Sub-base Mounting												Normally CLOSED
-	8	750	1	40	40	50	PUR	-	331F31	2995	481865	-

Available electrical parts:

You will find standard available coil details on the next pages.

Tel: +45 63 12 83 00 | Email: ps@hymatik.com | www.hymatik.com | Hvidkaervej 27a, DK-5250 Odense SV, Denmark

Dimensions

Dimensions Reference N° 1

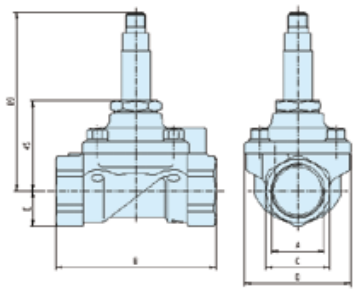

Dimensions Reference N° 2

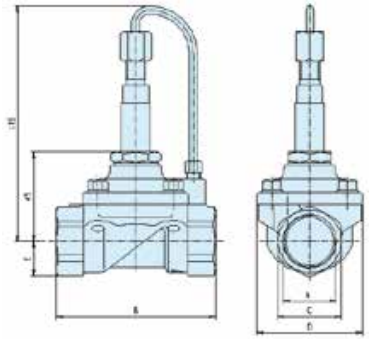

A	B	C	D	E
G3/4"	80	32	53	17.5
G1/2"	75	27	53	13.5

Dimensions Reference N° 3

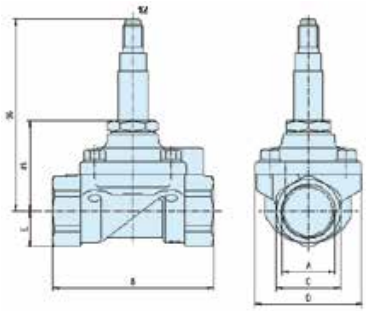

Dimensions Reference N° 4

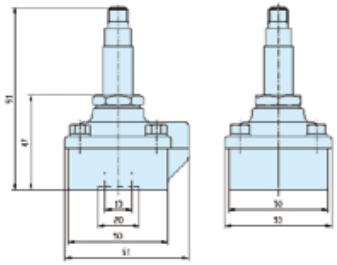

Dimensions Reference N° 5

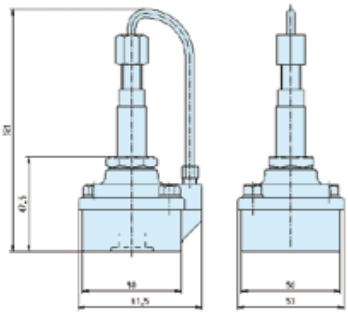

Dimensions Reference N° 6

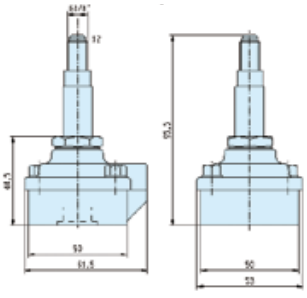

Dimensions Reference N° 7

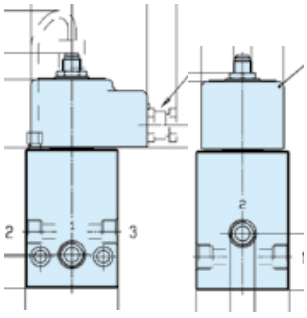

3-Way Solenoid Valve - Direct Acting



General application valves for dry or lubricated air, neutral gases and liquids

Description:
- 3-Way Solenoid Valve - Direct Acting - Normally Closed.
- Coil IP65 for 2 P + E plug according to DIN 43650 type A
- Power Consumption 8W (AC), 9W (DC).

Applications:
- This series is used in applications which require actuation and automatic discharge of moving systems.
- Typical applications can be found in: sterilizers, Cylinder actuation, air compressors, Diesel oil burners, pilot valves, water treatment installations.

Temperature Range:
- Min: -10°C I Max: see table

Seals Material:
- FKM, PCTFE

Advantages:
- Versatile product for many 2/2 NC v alve requiring applications, robust design.

Port size	Orifice	K_v	Admissible differential pressure (bar)		Fluid Temp.	Seal Material	Reference number			Options
G	mm	l/min	Min.	Max.	C°		Valve	Housing	Coil	
3-Way Solenoid Valve - Direct Acting - Normally Closed										Normally CLOSED
1/8”	1.5	1.5	0	15	100°C	FKM	E131K14	2995	481865	-
1/8”	2.0	2.5 (3.5)*	0	10	100°C	FKM	131K16	2995	481865	-
1/8”	2.0	2.5 (3.5)*	0	10	100°C	FKM	131K1650	2995	481865	**
1/8”	2.5	3.5	0	7	100°C	FKM	E131K13	2995	481865	-
1/4”	0.8	0.3	0	40	75°C	PCTFE	131K05	2995	481865	-
1/4”	1.5	1.5	0	15	100°C	FKM	E131K04	2995	481865	-
1/4”	1.5	1.5	0	15	100°C	FKM	E131K0450	2995	481865	**
1/4”	2.0	2.5 (3.5)*	0	10	100°C	FKM	E131K06	2995	481865	-
1/4”	2.0	2.5 (3.5)*	0	10	100°C	FKM	E131K0650	2995	481865	**
1/4”	2.5	3.5	0	7	100°C	FKM	E131K03	2995	481865	-
1/4”	2.5	3.5	0	7	100°C	FKM	E131K0350	2995	481865	**

* Kv for Exhaust side
** Manual override standard

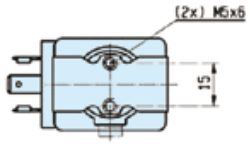

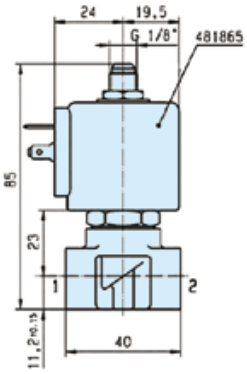

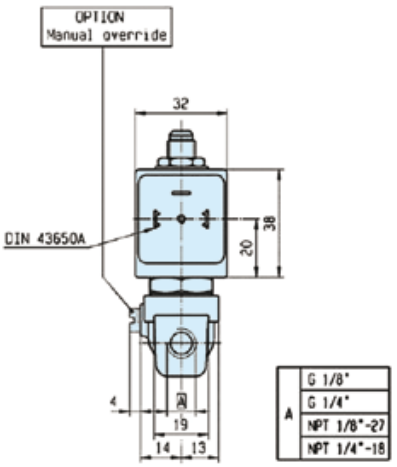

Please consult the "How to Order" part at the end of each coil chapter.

Tel: +45 63 12 83 00 | Email: ps@hymatik.com | www.hymatik.com | Hvidkaervej 27a, DK-5250 Odense SV, Denmark

Valves for Pneumatic Actuator Control

NAMUR Interfaces 1/4" & 1/2"

NAMUR + piped versions in safe or dangerous areas.

The interface design conforms to the NAMUR standard and to the VDI/VDE 3845 recommendations of the actuator industry. It allows a compact design of the actuator/valve unit.
In case of a 3/2 function, the air of the actuator spring chamber also flows through the pilot valve (re-breather function). This prevents corrosion of the actuator springs.

F	T	D1 mm	D2 mm	D3 mm	D4 min. mm	M mm
M5	1/4	32	24	8	12	M5
M6	1/2	45	40	10	16	M6

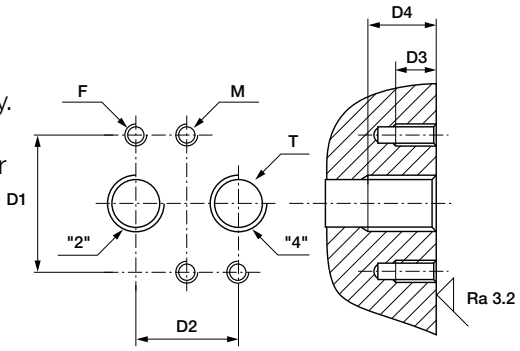

F: 2 mounting holes - **T:** 2 actuators control port - **M:** 2 holes for dowel pins

- High flow: 1.250 l/min (1/4"), 3.000 l/min (1/2")
- Compact design
- Long life expectancy
- N3x & P3x Series compatible with any Parker Lucifer coil (ATEX or not) of electrical group 2 (8/9 W coils)
- Fail safe standard
- Reduced inventory (3/2 & 5/2 functions with the same
- valve on 341Nx5 series)
- Mechanical part of the valve ATEX certified according standard EN 13463-1 & -5

General Information

Function:	3/2, 5/2, 3/2 <=> 5/2 and 5/3 valves.
Manual override:	Standard on all versions.
Design:	Nxx & Pxx Series: Solenoid operated spool valve with combined spring and air return & external air pressure operated versions. B0x Series: Solenoid direct acting valve with spring return.
Mounting:	Nxx Series: For direct mounting on NAMUR interface 1/4" & 1/2" Pxx Series: Piped valves G1/4" & G1/2" Bxx Series: Equiped with a banjo bolt G1/8" or G1/4"
Mounting position:	Indifferent.
Material specifications:	Aluminium body. Internal parts of stainless steel. Sealing material from NBR.
Range of admissible pressure drop:	Δp min. = see table. Δp max. = 10 bar.
Media:	Dry or lubricated air.
Fluid temperature:	Min. 0°C Max. + 50°C
Ambient temperature:	-20°C to +50°C
Electrical part:	N0x / P0x / Bxx Series are compatible with 22 mm coil 496131 / 496482 / 496637 size N3x / P3x Series are compatible with 32/37/40 mm coils part of electrical group 2 (8/9W), including 481865 / 495870 / 495905 Series / N3x90 Series are compatible with coils from electrical group 6,7,8 including coil 495900,495910,483580.
Solenoid duty:	100% ED.
Voltage:	481865 coil: 12 VDC , 24 VDC , 48 VDC , 110VDC, 24 V / 50 AC, 48 V / 50 AC, 110 V / 50 AC, 220-230V/50 AC, 115 V / 60 Hz AC, 230 V / 60 AC.
Voltage tolerance:	± 10% of nominal for 481865 coil.
Class of insulation material:	Class F for 481865 coil.
Standards:	Mechanical ATEX conform to EN 13463-1 & -5.

Tel: +45 63 12 83 00 | Email: ps@hymatik.com | www.hymatik.com | Hvidkaervej 27a, DK-5250 Odense SV, Denmark

NAMUR Valves G1/4" Series

Solenoid Operated Versions
N03-N05 Series with 22 mm Coil

Port size	Orifice	Q_N		Admissible differential pressure (bar)		Max. admissible fluid temperature (°C)	Seat disc	Reference number			Consumption Power (Watt)		Weight (g)	Dimensions Reference
				max.		min. = 0°C								
G	mm	l/min	min	DC=	AC~	Air & Neutral gases		Valve	Housing	Coil	DC	AC		
3/2 Solenoid operated - Combined spring & air return (monostable)														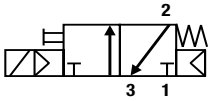
1/4	7	1250	2.5	10	10	50	NBR	**331N03**	-	**496131**	3	3	300	1
1/4	7	1250	2.5	10	10	50	NBR	**331N03**	-	**496482**	3	3	300	1
1/4	7	1250	2.5	10	10	50	NBR	**331N03**	-	**496637**	3	3	300	1
5/2 Solenoid operated - Combined spring & air return (monostable)														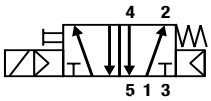
1/4	7	1250	2.5	10	10	50	NBR	**341N03**	-	**496131**	3	3	300	2
1/4	7	1250	2.5	10	10	50	NBR	**341N03**	-	**496482**	3	3	300	2
1/4	7	1250	2.5	10	10	50	NBR	**341N03**	-	**496637**	3	3	300	2
3/2 <=> 5/2 with conversion plate - Solenoid operated Combined spring & air return (monostable)														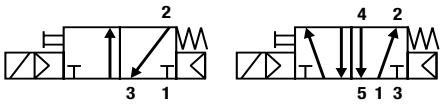
1/4	7	1250	2.5	10	10	50	NBR	**341N05**	-	**496131**	3	3	310	3
1/4	7	1250	2.5	10	10	50	NBR	**341N05**	-	**496482**	3	3	310	3
1/4	7	1250	2.5	10	10	50	NBR	**341N05**	-	**496637**	3	3	310	3
1/4	7	1250	2.5	10	10	50	NBR	**341N0502***	-	**496131**	3	3	310	3
1/4	7	1250	2.5	10	10	50	NBR	**341N0502***	-	**496482**	3	3	310	3
1/4	7	1250	2.5	10	10	50	NBR	**341N0502***	-	**496637**	3	3	310	3
5/2 Solenoid operated and return (bistable)														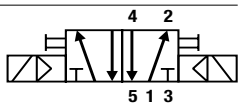
1/4	7	1250	2.5	10	10	50	NBR	**347N03**	-	**496131**	3	3	430	4
1/4	7	1250	2.5	10	10	50	NBR	**347N03**	-	**496482**	3	3	430	4
1/4	7	1250	2.5	10	10	50	NBR	**347N03**	-	**496637**	3	3	430	4
5/3 W1 closed in center position - Solenoid operated and return														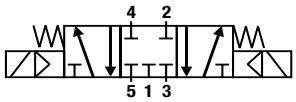
1/4	7	1250	2.5	10	10	50	NBR	**342N03**	-	**496131**	3	3	430	4
1/4	7	1250	2.5	10	10	50	NBR	**342N03**	-	**496482**	3	3	430	4
1/4	7	1250	2.5	10	10	50	NBR	**342N03**	-	**496637**	3	3	430	4
5/3 W3 exhausted in center position Solenoid operated and return														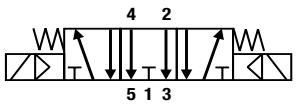
1/4	7	1250	2.5	10	10	50	NBR	**343N03**	-	**496131**	3	3	430	4

Please consult the "How to Order" part at the end of each coil chapter.

Tel: +45 63 12 83 00 | Email: ps@hymatik.com | www.hymatik.com | Hvidkaervej 27a, DK-5250 Odense SV, Denmark

Dimensions Reference 1

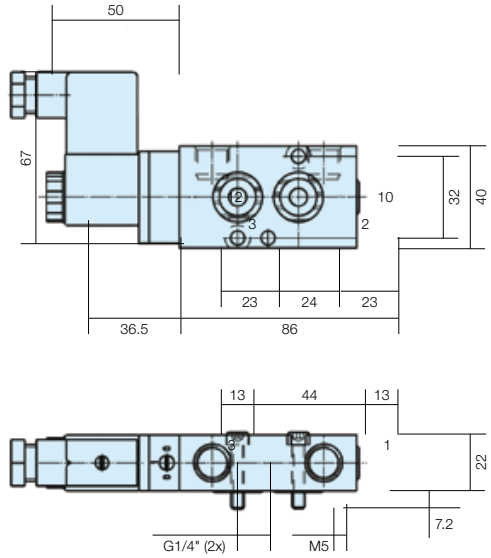

Dimensions Reference 2

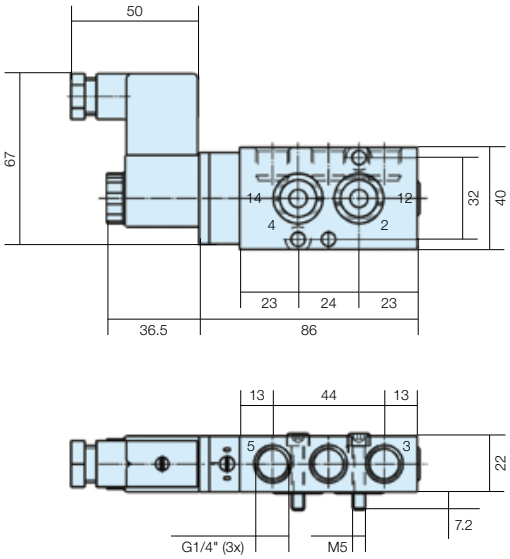

Dimensions Reference 3

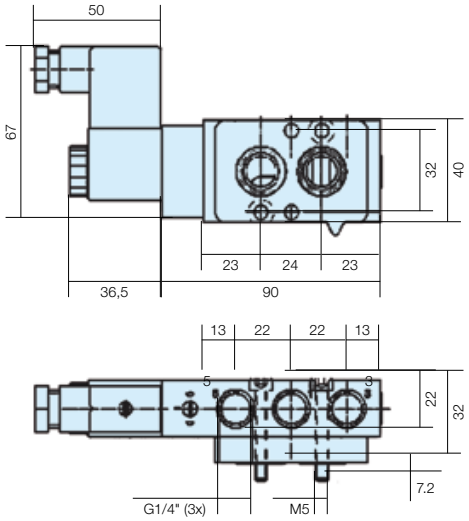

Dimensions Reference 4

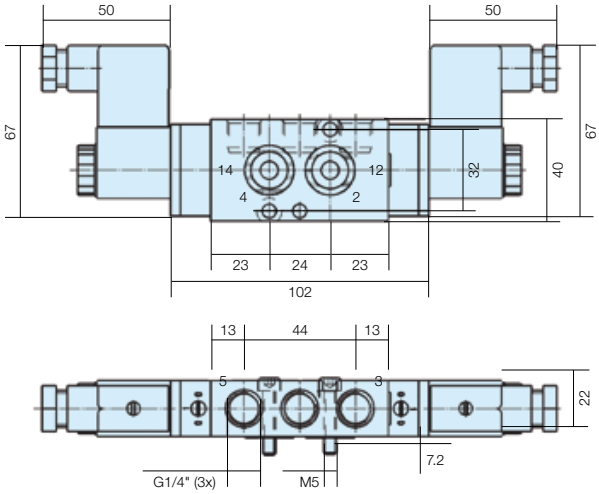

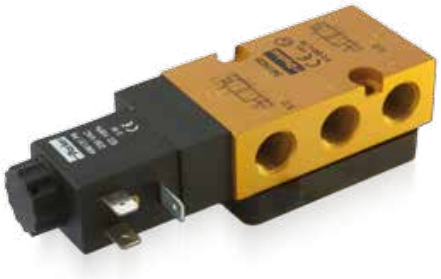

Please consult the "How to Order" part at the end of each coil chapter.

Tel: +45 63 12 83 00 | Email: ps@hymatik.com | www.hymatik.com | Hvidkaervej 27a, DK-5250 Odense SV, Denmark

NAMUR Valves G1/4" Series

Solenoid Operated Versions
N33-N35 Series with 32 / 37 / 40 mm Coil

Port size	Orifice	Q_N	Admissible differential pressure (bar) maximum			Maximum admissible fluid temperature (ºC) minimum = 0ºC	Seat disc	Reference number			Consumption Power (Watt)		Weight (g)	Elect. Group	Dim. Ref.
G	mm	l/min	min	DC=	AC~	Air & Neutral gases		Valve	Housing	Coil	DC	AC			

3/2 <=> 5/2 with conversion plate - Solenoid operated
Combined spring & air return (monostable)

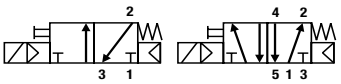

1/4	7	1250	2.5	10	10	50	NBR	**341N35**	**2995**	481865	9	8	480	2	5
1/4	7	1250	2.5	10	10	50	NBR	**341N35**	**2995**	495870	9	8	700	2	-
1/4	7	1250	2.5	10	10	50	NBR	**341N35**	-	495905	8	8	740	2	-
1/4	7	1250	2.5	10	10	50	NBR	**341N3502***	**2995**	481865	9	8	480	2	5
1/4	7	1250	2.5	10	10	50	NBR	**341N3502***	**2995**	495870	9	8	700	2	-
1/4	7	1250	2.5	10	10	50	NBR	**341N3502***	-	495905	8	8	740	2	-
1/4	7	1250	2.5	10	10	50	NBR	**341N3590***	**-**	483580	0.5-3	-	560	7	5
1/4	7	1250	2.5	10	10	50	NBR	**341N3590***	**-**	495910	0.3-3	-	920	8	-
1/4	7	1250	2.5	10	10	50	NBR	**341N3590***	-	495900	2	2,5	920	6	-

* Valves without manual override

5/2 Solenoid operated and return

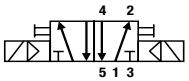

1/4	7	1250	2.5	10	10	50	NBR	**347N33**	**2995**	481865	9	8	750	2	6
1/4	7	1250	2.5	10	10	50	NBR	**347N33**	**2995**	495870	9	8	1190	2	-
1/4	7	1250	2.5	10	10	50	NBR	**347N33**	-	495905	8	8	1270	2	-
1/4	7	1250	2.5	10	10	50	NBR	**347N3390***	**-**	483580	0.5-3	-	700	7	6
1/4	7	1250	2.5	10	10	50	NBR	**347N3390***	**-**	495910	0.3-3	-	1420	8	-
1/4	7	1250	2.5	10	10	50	NBR	**347N3390***	-	495900	2	2,5	1420	6	-

* Valves without manual override

5/3 W1 Closed in center position
Solenoid operated and return

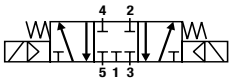

1/4	7	1250	2.5	10	10	50	NBR	**342N33**	**2995**	481865	9	8	750	2	6
1/4	7	1250	2.5	10	10	50	NBR	**342N33**	**2995**	495870	9	8	1190	2	-
1/4	7	1250	2.5	10	10	50	NBR	**342N33**	-	495905	8	8	1270	2	-

Dimensions Reference 5

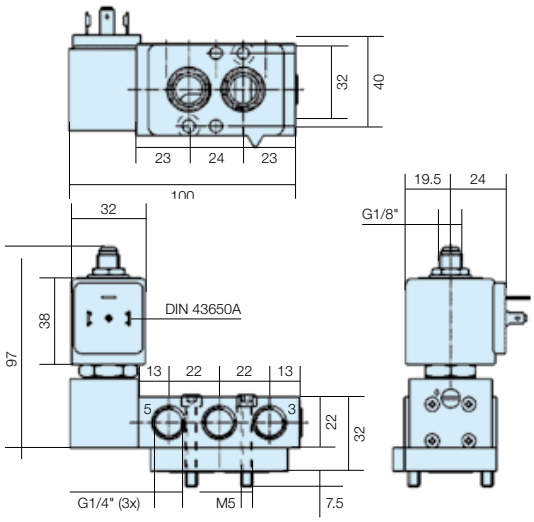

Dimensions Reference 6

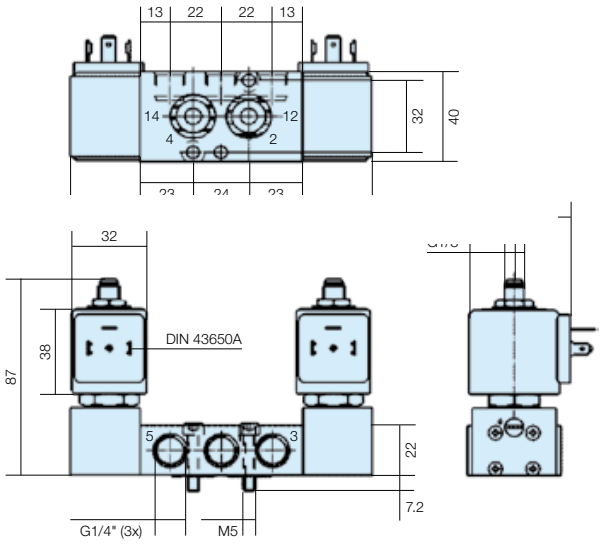

Tel: +45 63 12 83 00 | Email: ps@hymatik.com | www.hymatik.com | Hvidkaervej 27a, DK-5250 Odense SV, Denmark

NAMUR Valves G1/4" Series

External Pressure Air Operated Series
5xx N03 Series

Port size	Orifice	Q_N	Admissible differential pressure (bar) maximum			Maximum admissible fluid temperature (ºC) minimum = 0ºC	Seat disc	Reference number			Consumption Power (Watt)		Weight (g)	Elect. Group	Dim. Ref.
G	mm	l/min	min	DC=	AC~	Air & Neutral gases		Valve	Housing	Coil	DC	AC			
3/2 External pressure air operated Combined spring & air return (monostable) **External pressure supply 2.5 to 10 bar**															
1/4	7	1250	2.5	10	10	50	NBR	**531N03**	-	w/o	-	-	210	-	7
5/2 External pressure air operated Combined spring & air return (monostable) **External pressure supply 2.5 to 10 bar**															
1/4	7	1250	2.5	10	10	50	NBR	**541N03**	-	w/o	-	-	210	-	8
5/2 External pressure air operated External pressure air return (bistable) **External pressure supply 2.5 to 10 bar**															
1/4	7	1250	2.5	10	10	50	NBR	**547N03**	-	w/o	-	-	240	-	9
5/3 W1 closed in center position - External pressure air operated External pressure air return External pressure supply 2.5 to 10 bar															
1/4	7	1250	2.5	10	10	50	NBR	**542N03**	-	w/o	-	-	240	-	9

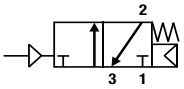

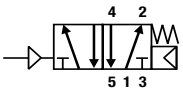

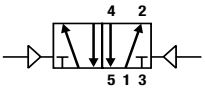

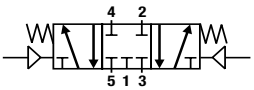

Dimensions Reference 7

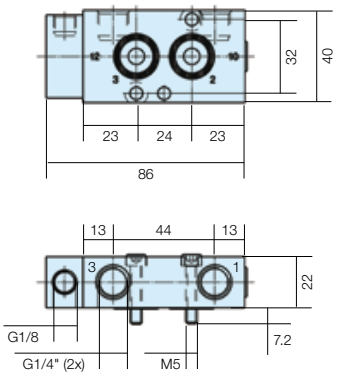

Dimensions Reference 8

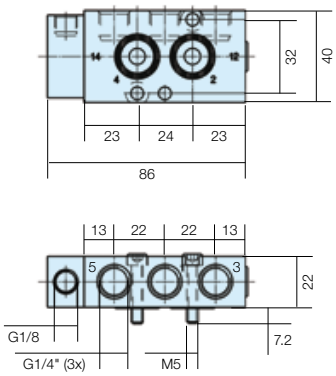

Dimensions Reference 9

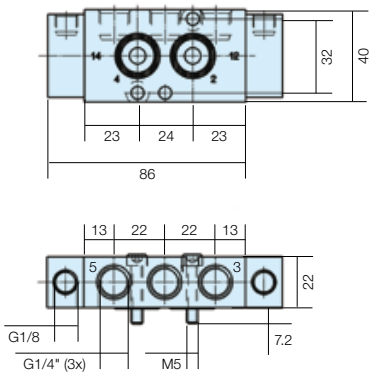

Tel: +45 63 12 83 00 | Email: ps@hymatik.com | www.hymatik.com | Hvidkaervej 27a, DK-5250 Odense SV, Denmark

NAMUR Valves G1/2" Series

Solenoid Operated Versions
N04 Versions with 22 mm Coil

Port size	Orifice	Q_N	Admissible differential pressure (bar) maximum			Maximum admissible fluid temperature (°C) minimum = 0°C	Seat disc	Reference number			Consumption Power (Watt)		Weight (g)	Elect. Group	Dim. Ref.
G	mm	l/min	min	DC=	AC~	Air & Neutral gases		Valve	Housing	Coil	DC	AC			
3/2 Solenoid operated Combined spring & air return (monostable)															
1/2	12	3000	2.5	10	10	50	NBR	**331N04**	-	496131	3	3	910	-	10
1/2	12	3000	2.5	10	10	50	NBR	**331N04**	-	496482	3	3	925	-	10
1/2	12	3000	2.5	10	10	50	NBR	**331N04**	-	496637	3	3	925	-	10
1/2	12	3000	2.5	10	10	50	NBR	**331N0402***	-	496131	3	3	910	-	10
1/2	12	3000	2.5	10	10	50	NBR	**331N0402***	-	496482	3	3	925	-	10
1/2	12	3000	2.5	10	10	50	NBR	**331N0402***	-	496637	3	3	925	-	10

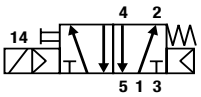

* Valves without manual override

5/2 Solenoid operated Combined spring & air return (monostable)															
1/2	12	3000	2.5	10	10	50	NBR	**341N04**	-	496131	3	3	910	-	11
1/2	12	3000	2.5	10	10	50	NBR	**341N04**	-	496482	3	3	925	-	11
1/2	12	3000	2.5	10	10	50	NBR	**341N04**	-	496637	3	3	925	-	11

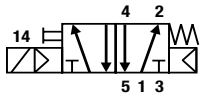

5/2 Solenoid operated and return (bistable)															
1/2	12	3000	2.5	10	10	50	NBR	**347N04**	-	496131	3	3	1240	-	12
1/2	12	3000	2.5	10	10	50	NBR	**347N04**	-	496482	3	3	1255	-	12
1/2	12	3000	2.5	10	10	50	NBR	**347N04**	-	496637	3	3	1255	-	12

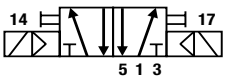

Dimensions Reference 10

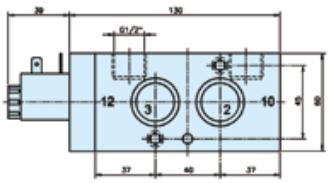

Dimensions Reference 11

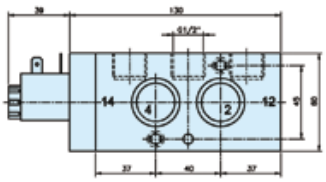

Dimensions Reference 12

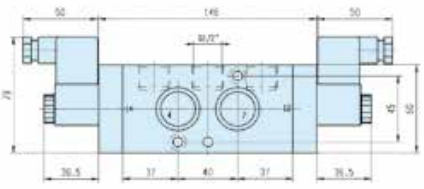

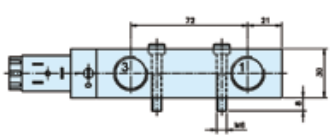

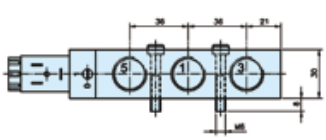

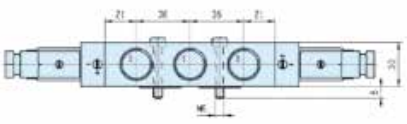

Please consult the "How to Order" part at the end of each coil chapter.

Tel: +45 63 12 83 00 | Email: ps@hymatik.com | www.hymatik.com | Hvidkaervej 27a, DK-5250 Odense SV, Denmark

NAMUR Valves G1/2" Series

Solenoid Operated Versions
N34 Series with 32 / 37 / 40 mm Coil

Port size	Orifice	Q_N	Admissible differential pressure (bar) maximum			Maximum admissible fluid temperature (ºC) minimum = 0ºC	Seat disc	Reference number			Consumption Power (Watt)		Weight (g)	Elect. Group	Dim. Ref.
G	mm	l/min	min	DC=	AC~	Air & Neutral gases		Valve	Housing	Coil	DC	AC			

3/2 Solenoid operated
Combined spring & air return (monostable)

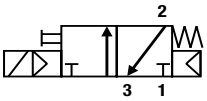

1/2	12	3000	2.5	10	10	50	NBR	**331N34**	**2995**	481865	9	8	810	2	13
1/2	12	3000	2.5	10	10	50	NBR	**331N34**	**2995**	495870	9	8	830	2	-
1/2	12	3000	2.5	10	10	50	NBR	**331N34**	-	495905	8	8	1150	2	-
1/2	12	3000	2.5	10	10	50	NBR	**331N3402***	**2995**	481865	9	8	810	2	13
1/2	12	3000	2.5	10	10	50	NBR	**331N3402***	**2995**	495870	9	8	830	2	-
1/2	12	3000	2.5	10	10	50	NBR	**331N3402***	-	495905	8	8	1150	2	-

* Valves without manual override

5/2 Solenoid operated
Combined spring & air return (monostable)

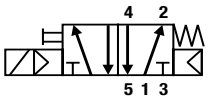

1/2	12	3000	2.5	10	10	50	NBR	**341N34**	**2995**	481865	9	8	800	2	14
1/2	12	3000	2.5	10	10	50	NBR	**341N34**	**2995**	495870	9	8	820	2	-
1/2	12	3000	2.5	10	10	50	NBR	**341N34**	-	495905	8	8	1140	2	-

5/2 Solenoid operated and return (bistable)

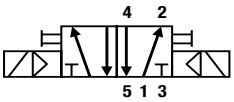

1/2	12	3000	2.5	10	10	50	NBR	**347N34**	**2995**	481865	9	8	960	2	15
1/2	12	3000	2.5	10	10	50	NBR	**347N34**	**2995**	495870	9	8	1000	2	-
1/2	12	3000	2.5	10	10	50	NBR	**347N34**	-	495905	8	8	1640	2	-

Dimensions Reference 13

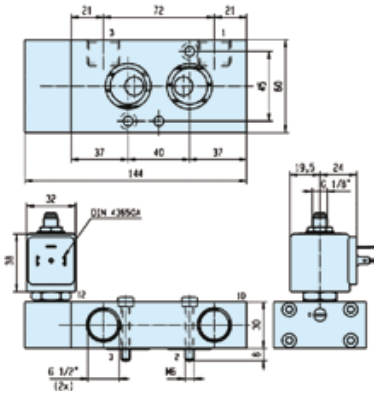

Dimensions Reference 14

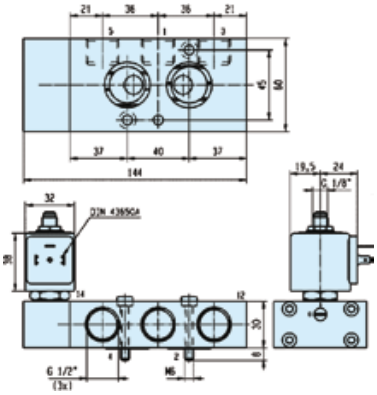

Dimensions Reference 15

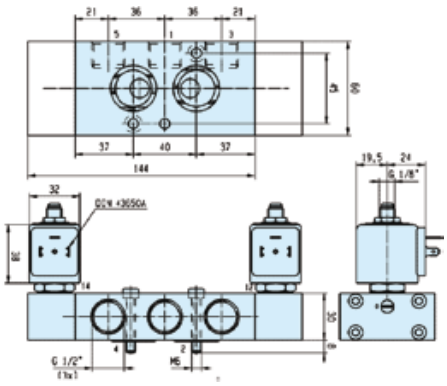

Please consult the "How to Order" part at the end of each coil chapter.

Parker Hannifin Corporation
Pneumatic Division - Europe

Tel: +45 63 12 83 00 | Email: ps@hymatik.com | www.hymatik.com | Hvidkaervej 27a, DK-5250 Odense SV, Denmark

NAMUR Valves G1/2" Series

External Pressure Air Operated Series
5 xx N04 Series

Port size	Orifice	Q_N	Admissible differential pressure (bar) maximum			Maximum admissible fluid temperature (°C) minimum = 0°C	Seat disc	Reference number			Consumption Power (Watt)		Weight (g)	Elect. Group	Dim. Ref.
G	mm	l/min	min	DC=	AC~	Air & Neutral gases		Valve	Housing	Coil	DC	AC			

3/2 External pressure air operated
Combined spring & air return (monostable)
External pressure supply 2.5 to 10 bar

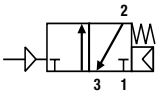

1/2	12	3000	2.5	10	10	50	NBR	**531N04**	-	w/o	-	-	620	-	16

5/2 External pressure air operated
Combined spring & air return (monostable)
External pressure supply 2.5 to 10 bar

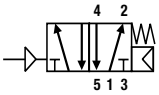

1/2	12	3000	2.5	10	10	50	NBR	**541N04**	-	w/o	-	-	600	-	17

Dimensions Reference 16

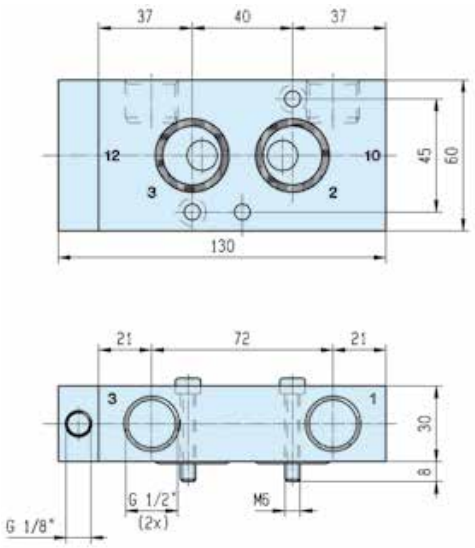

Dimensions Reference 17

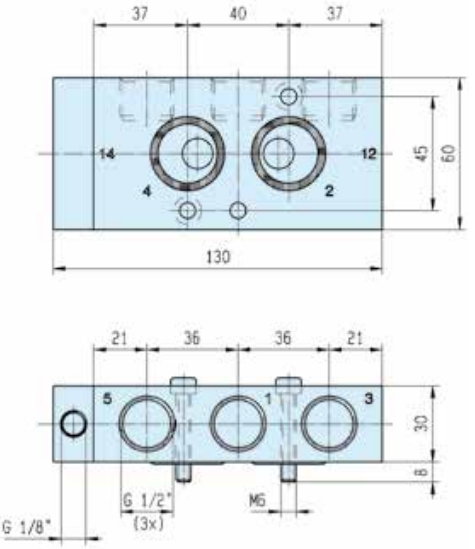

Please consult the "How to Order" part at the end of each coil chapter.

Tel: +45 63 12 83 00 | Email: ps@hymatik.com | www.hymatik.com | Hvidkaervej 27a, DK-5250 Odense SV, Denmark

Piped Valves - G1/4" Series

Solenoid Operated Versions
P03 Versions with 22 mm Coil

Port size	Orifice	Q_N	Admissible differential pressure (bar) maximum			Maximum admissible fluid temperature (°C) minimum = 0°C	Seat disc	Reference number			Consumption Power (Watt)		Weight (g)	Elect. Group	Dim. Ref.
G	mm	l/min	min	DC=	AC~	Air & Neutral gases		Valve	Housing	Coil	DC	AC			
5/2 Solenoid operated Combined spring & air return (monostable)															
1/4	7	1250	2.5	10	10	50	NBR	**341P03**	-	496131	3	3	250	-	18
1/4	7	1250	2.5	10	10	50	NBR	**341P03**	-	496482	3	3	250	-	18
1/4	7	1250	2.5	10	10	50	NBR	**341P03**	-	496637	3	3	250	-	18
5/2 Solenoid operated and return (bistable)															
1/4	7	1250	2.5	10	10	50	NBR	**347P03**	-	496131	3	3	350	-	19
1/4	7	1250	2.5	10	10	50	NBR	**347P03**	-	496482	3	3	350	-	19
1/4	7	1250	2.5	10	10	50	NBR	**347P03**	-	496637	3	3	350	-	19

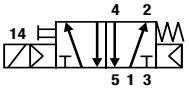

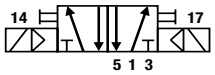

Dimensions Reference 18

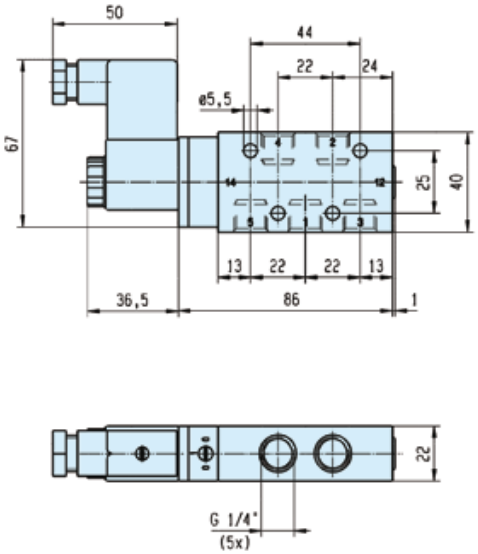

Dimensions Reference 19

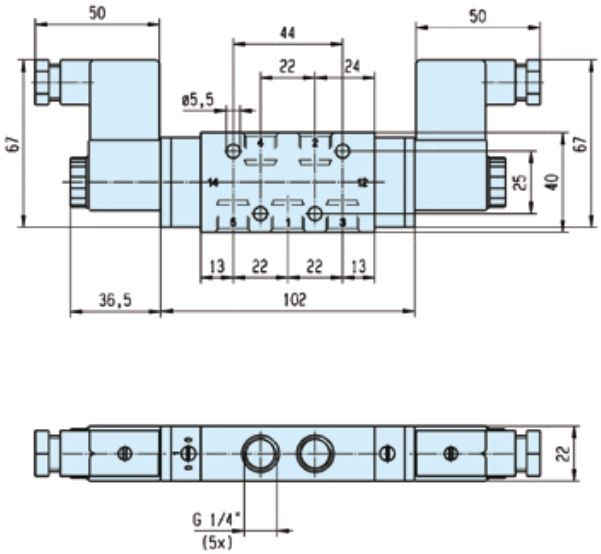

Please consult the "How to Order" part at the end of each coil chapter.

Tel: +45 63 12 83 00 | Email: ps@hymatik.com | www.hymatik.com | Hvidkaervej 27a, DK-5250 Odense SV, Denmark

Piped Valves - G1/4" Series

Solenoid Operated Versions
P33 Versions with 32-37-40 mm Coil

Port size	Orifice	Q_N	Admissible differential pressure (bar) maximum			Maximum admissible fluid temperature (°C) minimum = 0°C	Seat disc	Reference number			Consumption Power (Watt)		Weight (g)	Elect. Group	Dim. Ref.
G	mm	l/min	min	DC=	AC~	Air & Neutral gases		Valve	Housing	Coil	DC	AC			

5/2 Solenoid operated
Combined spring & air return (monostable)

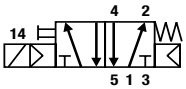

1/4	7	1250	2.5	10	10	50	NBR	**341P33**	**2995**	481865	9	8	470	2	20
1/4	7	1250	2.5	10	10	50	NBR	**341P33**	**2995**	495870	9	8	490	2	-
1/4	7	1250	2.5	10	10	50	NBR	**341P33**	-	495905	8	8	810	2	-

5/2 Solenoid operated and return (bistable)

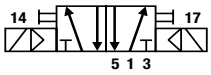

1/4	7	1250	2.5	10	10	50	NBR	**347P33**	**2995**	481865	9	8	620	2	21
1/4	7	1250	2.5	10	10	50	NBR	**347P33**	**2995**	495870	9	8	640	2	-
1/4	7	1250	2.5	10	10	50	NBR	**347P33**	-	495905	8	8	960	2	-

Dimensions Reference 20

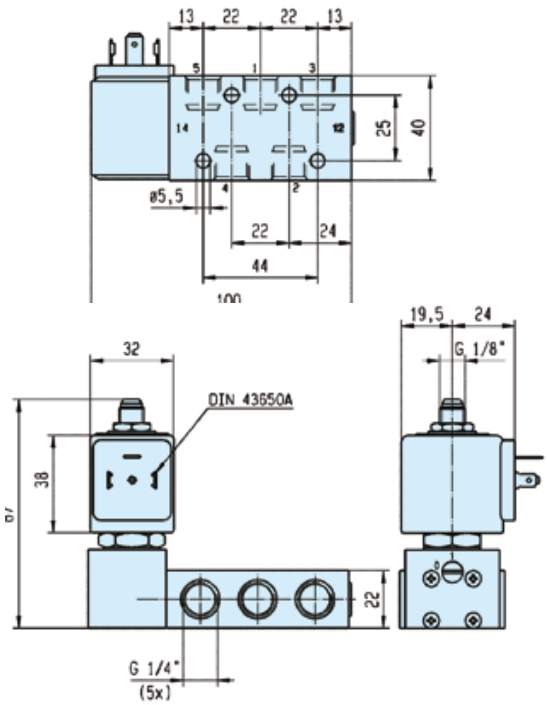

Dimensions Reference 21

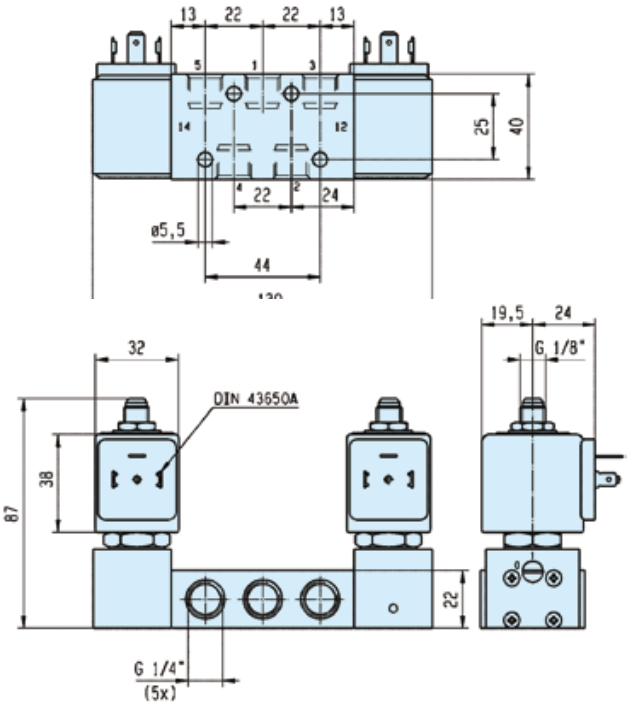

Tel: +45 63 12 83 00 | Email: ps@hymatik.com | www.hymatik.com | Hvidkaervej 27a, DK-5250 Odense SV, Denmark

Piped Valves - G1/2" Series

Solenoid Operated Versions
P04 Versions with 22 mm Coil

Port size	Orifice	Q_N	Admissible differential pressure (bar) maximum			Maximum admissible fluid temperature (°C) minimum = 0°C	Seat disc	Reference number			Consumption Power (Watt)		Weight (g)	Elect. Group	Dim. Ref.
G	mm	l/min	min	DC=	AC~	Air & Neutral gases		Valve	Housing	Coil	DC	AC			
5/2 Solenoid operated Combined spring & air return (monostable)															
1/2	12	3000	2.5	10	10	50	NBR	**341P04**	-	496131	3	3	670	-	22
1/2	12	3000	2.5	10	10	50	NBR	**341P04**	-	496482	3	3	670	-	22
1/2	12	3000	2.5	10	10	50	NBR	**341P04**	-	496637	3	3	670	-	22
5/2 Solenoid operated and return (bistable)															
1/2	12	3000	2.5	10	10	50	NBR	**347P04**	-	496131	3	3	840	-	23
1/2	12	3000	2.5	10	10	50	NBR	**347P04**	-	496482	3	3	840	-	23
1/2	12	3000	2.5	10	10	50	NBR	**347P04**	-	496637	3	3	840	-	23

Dimensions Reference 22

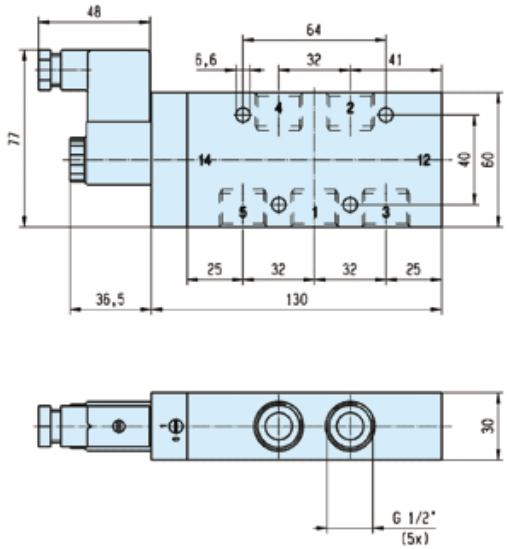

Dimensions Reference 23

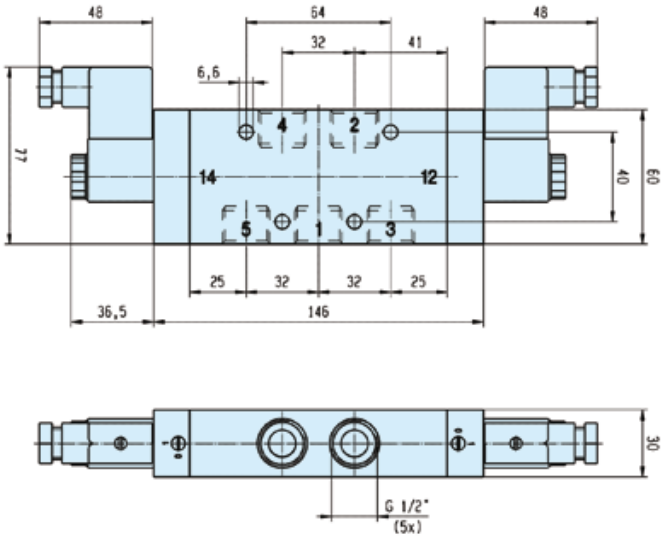

Please consult the "How to Order" part at the end of each coil chapter.

Parker Hannifin Corporation
Pneumatic Division - Europe

Tel: +45 63 12 83 00 | Email: ps@hymatik.com | www.hymatik.com | Hvidkaervej 27a, DK-5250 Odense SV, Denmark

Piped Valves - G1/2" Series

Solenoid Operated Versions
P34 Versions with 32/37/40 mm Coil

Port size	Orifice	Q_N	Admissible differential pressure (bar) maximum			Maximum admissible fluid temperature (°C) minimum = 0°C	Seat disc	Reference number			Consumption Power (Watt)		Weight (g)	Elect. Group	Dim. Ref.
G	mm	l/min	min	DC=	AC~	Air & Neutral gases		Valve	Housing	Coil	DC	AC			
5/2 Solenoid operated Combined spring & air return (monostable)															
1/2	12	3000	2.5	10	10	50	NBR	**341P34**	**2995**	481865	9	8	900	2	24
1/2	12	3000	2.5	10	10	50	NBR	**341P34**	**2995**	495870	9	8	920	2	-
1/2	12	3000	2.5	10	10	50	NBR	**341P34**	-	495905	8	8	1240	2	-
5/2 Solenoid operated and return (bistable)															
1/2	12	3000	2.5	10	10	50	NBR	**347P34**	**2995**	481865	9	8	1240	2	25
1/2	12	3000	2.5	10	10	50	NBR	**347P34**	**2995**	495870	9	8	1280	2	-
1/2	12	3000	2.5	10	10	50	NBR	**347P34**	-	495905	8	8	2080	2	-

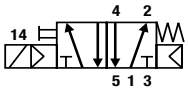



Dimensions Reference 24

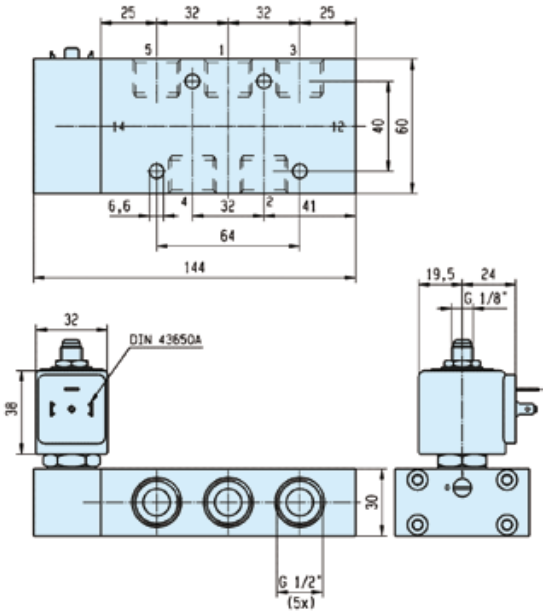

Dimensions Reference 25

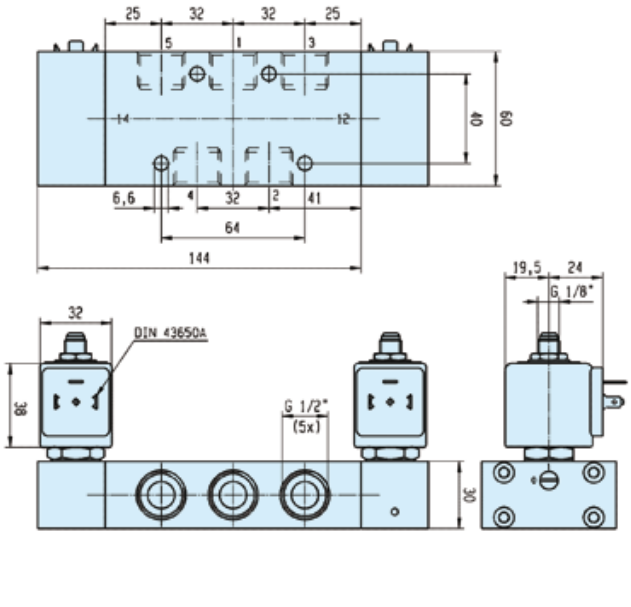

Please consult the "How to Order" part at the end of each coil chapter.

Tel: +45 63 12 83 00 | Email: ps@hymatik.com | www.hymatik.com | Hvidkaervej 27a, DK-5250 Odense SV, Denmark

Coils and Spare Parts Informations

Coils 22 mm for N03-N05 Series
Safe Area & ATEX Zone 22 — Ref. 496131 / 496482 / 496637

These coils with connection for 2 P+G DIN 43650 B plug are encapsulated in synthetic material, conform to the IEC/CENELEC safety standards and comply with European low voltage directive 73/23/EC .

- Power: 3W
- Insulation Class: F (155°C)
- Degree of Protection: IP65 (with plug)
- Duty Cycle: 100% ED
- Ambient Temperature: -10°C to 50°C

3 different types are available:

- Ref. 496131 for a safe area without plug
- Ref. 496482 for a safe area with plug
- Ref. 496637 for an ATEX area Zone 22 (Ex)



496637 coil series with connection 2P + G when mounted together with the supplied Pg9 plug (delivered with the coil) are suitable for use in dangerous areas (dust Zone 22) according to the European directive ATEX 94/9/C. Protection mode: Ex tD A22 IP65 - T95°C

Available Voltages	Safe area without DIN plug Order Code	Safe area with DIN plug Order Code	ATEX Zone 22 EX II 3D Order Code
12 VDC	**496131 C1**	**496482 C1**	**496637 C1**
24 VDC	**496131 C2**	**496482 C2**	**496637 C2**
48 VDC	**496131 C4**	**496482 C4**	**496637 C4**
110 VDC	**496131 C5**	**496482 C5**	**496637 C5**
24/50-60 VAC	**496131 P0**	**496482 P0**	**496637 P0**
48/50-60 VAC	**496131 S4**	**496482 S4**	**496637 S4**
110/50-60 VAC	**496131 P2**	**496482 P2**	**496637 P2**
115/60 VAC	**496131 K8**	**496482 K8**	**496637 K8**
230/50-60 VAC	**496131 P9**	**496482 P9**	**496637 P9**

How to Order

The housing kit is already included into the coil reference, so it's not needed to add it with the order code:

Valve Reference Number - Coil Reference - Voltage code = Order code

Example: 341N03 - 496131 C2

Valves and coils may be ordered also separately.

Parker Hannifin Corporation
Pneumatic Division - Europe

Tel: +45 63 12 83 00 | Email: ps@hymatik.com | www.hymatik.com | Hvidkaervej 27a, DK-5250 Odense SV, Denmark

Coils 32 mm / 37 mm / 40 mm for N33-N34-N35 Series

Safe Area — Ref. 481865

These coils can be mounted with every Parker solenoid valves corresponding to the specified Coil Group.
See column "Coil Group" within valve pages. This is an encapsulated assembly comprising a coil, integral magnetic iron path and snap-on plug connection.

The synthetic material encapsulation provides an effective compact housing, offering full protection against dust, oil, water, etc. Ease of mounting in confined space - offers shock and corrosion protection - simplifies conversion of existing equipment to other requirements, etc.

Coils conform to the IEC/CENELEC safety standards and complies with European low-voltage directive.

Specification			Standard				Double frequency	
Ref. (without DIN plug) **Ref. (with DIN plug)**			**481865** **482725**				**483510** **482635**	
Coil Group			**2.0 / 2.1**					
Degree of protection			**IP65** according to IEC / EN 60529 standards (with DIN plug).					
Class of insulation			F 155°C					
Electrical connection			The coil is connected with a 2 P + E plug according to EN 175301-803 type A					
Ambient temperature			-40°C to +50°C - The application is limited also by the temperature range of the valve.					
Elect. Power	**DC**	**Pn** (hot)	9 W				-	
		P (cold) 20°C	12 W				-	
	AC	**Pn** (holding)	8 W				9 W	
		Attraction cold	26 VA (9 W)				32 VA (10 W)	
Weight			130 g (without plug)					
Voltages "Un"			**VAC/Hz**	**Code**	**VDC**	**Code**	**VAC/Hz**	**Code**
-10% to +10% of the Un			24/50 48/50 110/50 220-230/50	A2 A4 A5 3D	24 48 110	C2 C4 C5	24/50, 24/60 48/50, 48/60 110-115/50, 120/60 220-240/50, 240/60	P0 S4 S5 S6

These coils must be used with suitable housings, see example below:
The coil assembly kit **Ref. 2995** corresponds to the "housing" of Lucifer® valve numbering system (Valve - housing - coil - voltage). It is composed of a nameplate giving details of the valve type, a round washer and a nut to ensure the fixing between 32 mm coil and the valve.

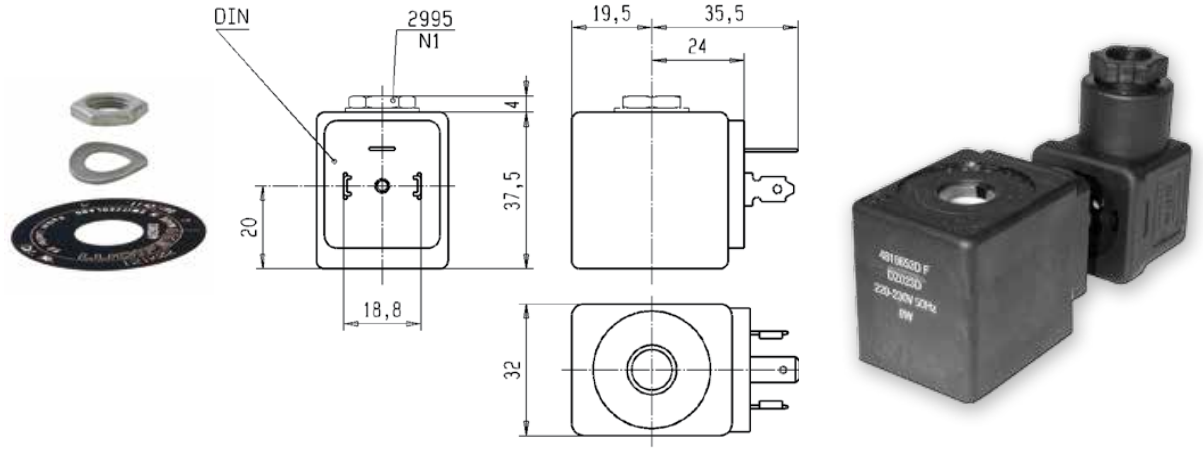

How to Order

To Order a Coil choose Coil Ref + Voltage Code
Example: **481865 for 24VDC = 481865C2**
More voltage possibilities can be found in the table of voltage codes at the end of the coil section.

To Order a Valve + Coil Combination:
Example: **341N35-2995-481865C2**

Tel: +45 63 12 83 00 | Email: ps@hymatik.com | www.hymatik.com | Hvidkaervej 27a, DK-5250 Odense SV, Denmark

Coils 32 mm / 37 mm / 40 mm for N33-N34-N35 Series

ATEX Zone 2-22 — REF. 495870

These coils can be mounted with every Parker ATEX solenoid valves corresponding to the specified Coil Group. See column "Coil Group" within valve pages.
Application: Control of solenoid valves in dangerous areas where explosion-proof protection Ex nc AC IIC T3 to T6 is required.
Ease of mounting in confined space - offers shock and corrosion protection - simplifies conversion of existing equipment to other requirements, etc. Coils conforms to the IEC/CENELEC safety standards and complies with European low-voltage directive.
Small size for ease of mounting in confined spaces.

Reference			495870				496110	
Certificate			LCIE 05 ATEX 6003 X					
Coil Group			2.0 / 2.1					
Type of protection		Gas	II 3 G - Ex nc AC IIC T3 / T4				II 3 G - Ex nc AC IIC T3 / T4	
		Dust	II 3 D - Ex tc IIIC - T195°C / T130°C				II 3 D - Ex tc IIIC - T195°C / T130°C	
Degree of protection			IP65 (with plug) according to IEC/EN 60529					
Insulation Class			F (155°C)					
Duty cycle			100%					
Ambiant temperature			-40°C to +50°C The application is limited also by the temperature range of the valve.					
Elect. Power	DC	Pn (hot)	9 W				-	
		P (cold) 20°C	12 W				-	
	AC	Pn (holding)	8 W				9 W	
		Attraction cold	26 VA (9 W)				32 VA (10 W)	
Weight			150 g					
Voltages "Un"			VAC/Hz	Code	VDC	Code	VAC/Hz	Code
-10% to +10% of the Un			24/50 48/50 110/50 220-230/50	A2 A4 A5 3D	24 48 110	C2 C4 C5	24/50-60 48/50-60 110/50-60 220/50-60	P0 S4 S5 S6

These coils must be used with suitable housings, see example below:
The coil assembly kit **Ref. 2995** corresponds to the "housing" of Lucifer® valve numbering system (Valve - housing - coil - voltage). It is composed of a nameplate giving details of the valve type, a round washer and a nut to ensure the fixing between 32 mm coil and the valve.



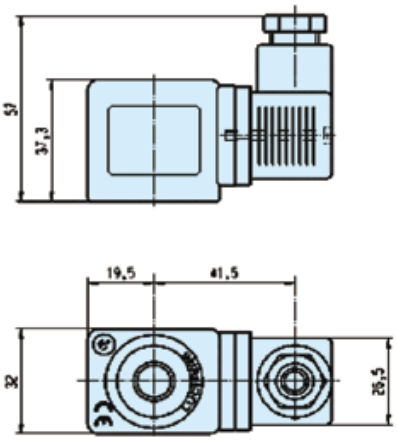



How to Order

To Order a Coil choose Coil Ref + Voltage Code
Example: **495870 for 24VDC = 495870C2**

To Order a Valve + Coil Combination:
Example: **341N35-2995-495870C2**

Coils 32 mm / 37 mm / 40 mm for N33-N34-N35 Series

ATEX Zone 1-21 — Ref. 495905

These coils can be mounted with every Parker ATEX solenoid valves corresponding to the specified Coil Group.
See column "Coil Group" within valve pages.
Application: Control of solenoid valves in dangerous areas where explosion-proof protection Ex db mb IIC T4 is required.
Benefits: Rotatable 360° fibreglass-reinforced plastic housing (class H). Solenoid coil, rectifier (silicium diodes), fuses and varistor protection are completely encapsulated into the coil housing by epoxy resin for shock and corrosion protection.
The plastic housing is delivered with M20 x 1.5 cable gland certified for use "db" protection.
Small size for ease of mounting in confined space.

Reference			495905	495905.05
Certificate			LCIE 03 ATEX 6451 X - IECEx LCI 06.0004 X	
Coil Group			2.0 / 2.1	
Type of protection		Gas	II 2 G - Ex db mb IIC T4	
		Dust	II 2 D - Ex tb IIIC - 130°C	
Degree of protection			IP67	
Ambient temperature			-40°C to +65°C The application is limited also by the temperature range of the valve.	
Class of insulation			H (180 °)	
Electrical connection			Electric connection is done in the connection box on an easily accessible connector terminals. The introduction of the cable (Ø min 5 mm, Ømax. 11 mm, section max. 2.5 mm²) in the connection box passes by the built in M20 x 1.5 cable gland.	
Elect. Power	DC	Pn (hot)	8 W	
		P (cold) 20°C	9 W	
	AC	Pn (holding)	8 W	
		Attraction cold	9 W	

Voltages "Un"	VAC/Hz	Code	VDC	Code
-10% to +10% of Un for AC - 10 % to + 10 % for Un DC.	24/50 48/50 115/50 230/50	A2 A4 E5 F4	24 48 110	C2 C4 C5

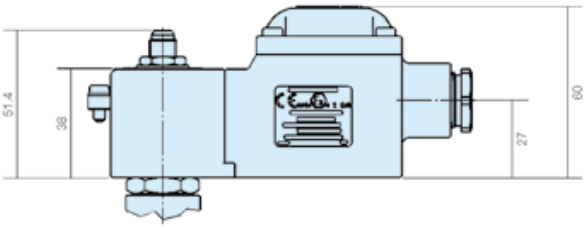

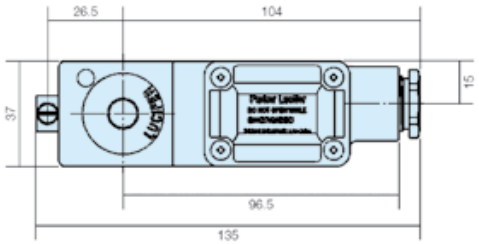

495905

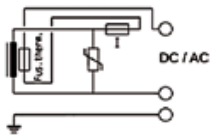

***495905.05**

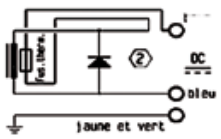



How to Order

To Order a Coil choose Coil Ref + Voltage Code
Example: **495905 for 24VDC = 495905C2**

To Order a Valve + Coil Combination:
Example: **341N35-495905C2**

Tel: +45 63 12 83 00 | Email: ps@hymatik.com | www.hymatik.com | Hvidkaervej 27a, DK-5250 Odense SV, Denmark

Spare Parts Mounting Kit and Accessories



Kit for G1/4" Models without conversion plate (N x 3 Series)

Kit includes the 2 mounting screws M5 x 25 A2, the dowel pin M5 x 10 A2, the 2 O-rings NBR 15 x 2.5
Order code: 496132

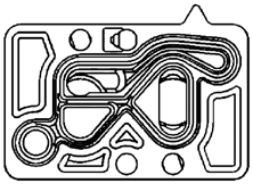



Kit for G1/4" Models with conversion plate (N x 5 Series)

Kit includes the 2 mounting screws M5 x 35 A2, the dowel pin M5 x 20 A2, the conversion plate equipped with its seals
Order code: 496742 (equipped plate)
Order code: 496852 (screws + pin)



Kit for G1/2" Models (N x 4 Series)

Kit includes the 2 mounting screws M6 x 35 A2, the dowel pin M6 x 12 A2, the 2 O-rings NBR 24 x 3
Order code: 496133



Exhaust Flow Regulators

Material Body:	Brass	Filter element:	Sintered bronze
Spring:	Stainless Steel	Seal:	NBR

G1/8" Order code: 496551 **G1/4" Order code: 496552** **G1/2" Order code: 496553**

Parker Hannifin Corporation
Pneumatic Division - Europe

Tel: +45 63 12 83 00 | Email: ps@hymatik.com | www.hymatik.com | Hvidkaervej 27a, DK-5250 Odense SV, Denmark



Connector for 22 mm Coil

Connector DIN43650 AB Pg9 2P+E
Order code: 481043



Housing for 22 mm Coil

Plastic nut with O-ring
Order code: 3125



Connector for 32 mm Coil

Connector DIN43650 AA Pg9 2P+E
Order code: 486586



G1/8 - 4/3 Way Flat Slide Valves Series DRS



Actuation System:

- Rotary lever
- Rotary switch

Operating information

System	Flat slide valve without automatic return to neutral position	
Mounting	2 Screws M4	
Tube connection	Thread	
Port size	Port P, A, B: G1/8 Port R: M5	
Weight (mass)	0.500 kg	
Installation	In any position	
Ambient temperature range	-10 °C to +55 °C	Note: Please consult us for operating temperatures below 0° C
Medium temperature range	-10 °C to +60 °C	
Medium	Filtered compressed air	
Lubrication	Oil mist lubrication compatible with Buna N	
Pneumatic Characteristics		
Nominal pressure	6 bar	
Operating pressure range	0 – 10 bar	
Nominal flow	350 l/min	
Actuation		
Manual control	Direct	
Actuation force	ca. 6 N	

Tel: +45 63 12 83 00 | Email: ps@hymatik.com | www.hymatik.com | Hvidkaervej 27a, DK-5250 Odense SV, Denmark

Rotary Lever – Type: DRS 412 .-1/8

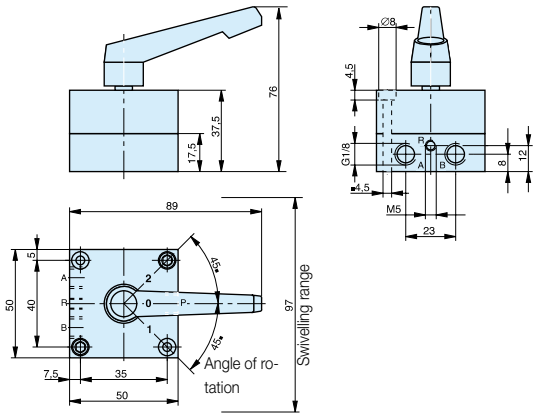

Rotary Switch – Type: DRS 417 .-1/8

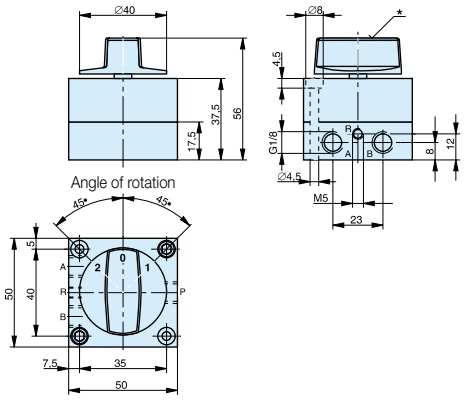

Port identification:
A = 4 Outlet
B = 2 Outlet
R = 5 Exhaust
P = 1 Pressure supply

* After removing the cover and loosening the mounting screws, the rotary switch is infinitely variable.

Order Instructions – 4/3 Way Flat Slide Valves, Series DRS

Actuation	Symbol	Order Instructions	
		Type	**Order code**
Rotary lever Middle position pressurized	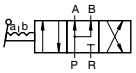	DRS 412 B-1/8	**PA 10267**
Rotary lever Middle position vented	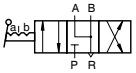	DRS 412 E-1/8	**PA 10266**
Rotary lever Middle position closed	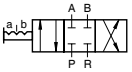	DRS 412G-1/8	**PA 10268**
Rotary switch Middle position pressurized	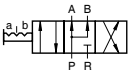	DRS 417 B-1/8	**PA 10264**
Rotary switch Middle position vented	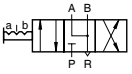	DRS 417 E-1/8	**PA 10263**
Rotary switch Middle position closed	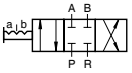	DRS 417 G-1/8	**PA 10265**

G1/4 - 3/2 and 5/2 Way Valves Pedal Actuated - Series F



Actuation System:
- Pedal

Connections for
3/2 way version:

Version
„Normally closed“: P, B, S
„Normally open“: P, A, R

* Only for version “both switch positions indexed“
– return is only effected after actuating the locking pedal.

Mounting Instruction:
Use only screw connections with max. wrench size across flats of 15.

Connection designation:
A = 4 Outlet
B = 2 Outlet
R = 5 Exhaust
P = 1 Air supply
S = 3 Exhaust

Operating information

Type	Poppet Valve
Mounting	4 Screws M8 (1
Tube connection	Thread
Port size	G1/4
Weight (mass)	1.5 kg
Installation	In any position
Ambient temperature range (3	-10 °C to +55 °C
Medium temperature range (3	-10 °C to +60 °C
Medium	Filtered and oiled or filtered, unoiled compressed air
Lubrication (2	Oil mist lubrication compatible with Buna N

Pneumatic Characteristics

Nominal pressure	6 bar
Operating pressure range	0 – 10 bar
Nominal flow	1400 l/min

Actuation

Manual control	Direct
Stroke	2 mm
Actuation force	ca. 30 N

(1 After removing the rubber footing
(2 We recommend the use of mineral oil type VG 32 to ISO 3448
(3 Note: Please consult us for operating temperatures below 0° C

Pedal actuated – Type: F331..-08.., F531..-08

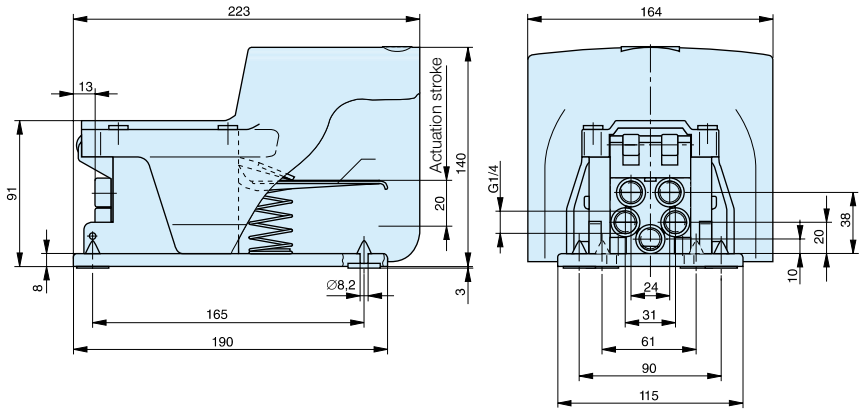

Dimensions in mm

Parker Hannifin Corporation
Pneumatic Division - Europe

Tel: +45 63 12 83 00 | Email: ps@hymatik.com | www.hymatik.com | Hvidkaervej 27a, DK-5250 Odense SV, Denmark

Order Instructions – 3/2 and 5/2 Way Valves

Actuation	Symbol	Order Instructions	
		Type	**Order code**
Pedal with spring return	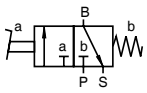	F 331RF-08NG*	**KZ 4410**
	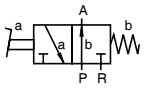	F 331RF-08NO*	**KZ 4411**
Pedal without reset	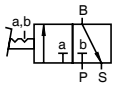	F 331-08NG*	**KZ 4408**
	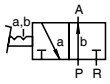	F 331-08NO*	**KZ 4409**
Pedal with spring return	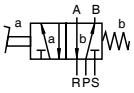	F 531RF-08	**KZ 4413**
Pedal both switch positions indexed	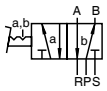	F 531-08	**KZ 4412**

* NC – Version normally closed
NO – Version normally open

Tel: +45 63 12 83 00 | Email: ps@hymatik.com | www.hymatik.com | Hvidkaervej 27a, DK-5250 Odense SV, Denmark

G1/2 to G2 - 2/2-Way Stop Valves Series ARKV

Actuation System:

- Pneumatic



Operating information

Description	2/2 Way Valve
Type	Poppet valve normally closed
Mounting	Direct in piping
Tube connection	Thread
Port size	G1/2 G3/4 G1 G1 1/2 G2
Weight (mass) Kg	0.745 1.115 1.365 2.695 4.290
Installation	In any position
Ambient temperature range	-20 °C to +80 °C
Medium temperature range	0 °C to +80 °C

Note: Please consult us for operating temperatures below 0° C

Medium	Compressed air, neutral gases, presswater (for low flow- und valve closingspeed only)
Actuating medium	filtered compressed air

Pneumatic characteristics

Nominal pressure	6.3 bar
Operating pressure range	0 – 10 bar
Nominal flow (l/min)	2200 5000 6900 22000 40000

Actuation

Pneumatic	Direct

Actuating Pressure – Type: ARKV-15

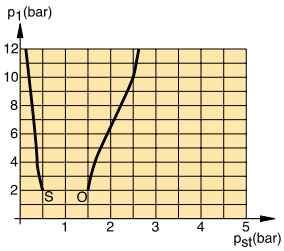

O = $p_{st\ min}$ to open
S = $p_{st\ max}$ to close

Actuating Pressure – Type: ARKV-20

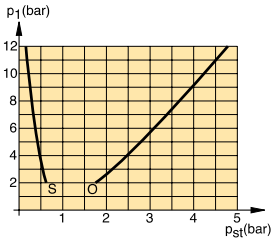

O = $p_{st\ min}$ to open
S = $p_{st\ max}$ to close

Actuating Pressure – Type: ARKV-25

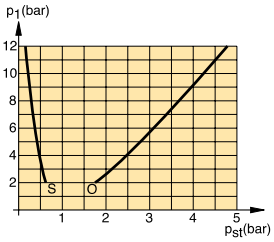

O = $p_{st\ min}$ to open
S = $p_{st\ max}$ to close

Actuating Pressure – Type: ARKV-40

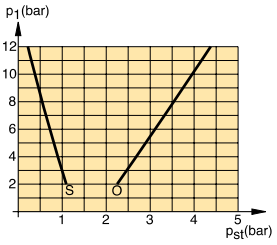

O = $p_{st\ min}$ to open
S = $p_{st\ max}$ to close

Actuating Pressure – Type: ARKV-50

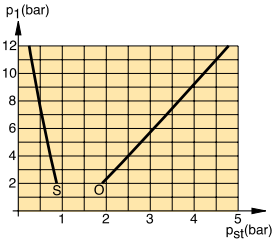

O = $p_{st\ min}$ to open
S = $p_{st\ max}$ to close

Dimensions in mm

Pneumatically actuated – Type: ARKV-..

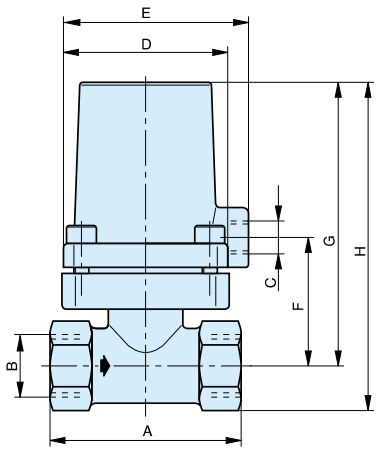

Dimensions

Type	A	B	C	D	E	F	G	H
ARKV-15 NC	65	G1/2	G1/8	55	61	41.5	95	109.5
ARKV-20 NC	76	G3/4	G1/4	65	75	50	112	129
ARKV-25 NC	91	G1	G1/4	65	75	57	119	139
ARKV-40 NC	123	G11/2	G1/4	110	112	67	137	167.5
ARKV-50 NC	150	G2	G1/4	130	134	75	153	190

Order Instructions

Actuation System	Symbol	Order data	
		Type	**Order code**
Pneumatic	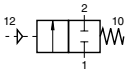	ARKV-15 NC	**PD 07334**
		ARKV-20 NC	**PD 07580**
		ARKV-25 NC	**PD 07581**
		ARKV-40 NC	**PD 07757**
		ARKV-50 NC	**PD 07765**

Tel: +45 63 12 83 00 | Email: ps@hymatik.com | www.hymatik.com | Hvidkaervej 27a, DK-5250 Odense SV, Denmark

G1/8 - 3/2-Way Valves - Series K9

Actuation:

- Rotary lever, indexed
- Rotary lever, spring return
- Rotary lever, indexed, secured in two positons
- Pushbutton
- Cam operation
- Toggle cam operation
- Plunger operated
- Cam operated, free cam left or free cam right
- Pivoted lever
- Pedal
- Actuators for panel mounting

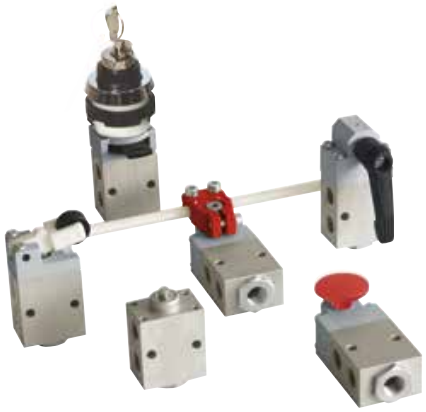

Operating information

System	Poppet Valve	
Mounting	2 Screws M4	
Tube connection	Thread	
Port size	G1/8	
Installation	In any position	
Ambient temperature range	-10 °C to +55 °C	Note: Please consult us for operating temperatures below 0° C
Medium temperature range	+5 °C* to +60 °C	
Medium	Filtered and lubricated or filtered and unlubricated air	
Lubrication	None or oil mist lubrication	

Pneumatic Characteristics

Nominal pressure	6 bar
Operating pressure range	0 – 10 bar
Nominal flow	220 l/min
Flow direction	1 → 2 normally closed 3 → 2 normally open
Actuation	
Actuation	Manual, mechanical and pedal actuated
Stroke	1.5 – 3 mm

* -10°C when using dry compressed air

Actuation Forces, Rotation Angles and Weight

Description	Type	Actuation force (N)	Rotation angle	Weight mass (kg)
Rotary lever, indexed	K9 312-1/8	4.5	±45°, 90°	0.110
Rotary lever, spring return	K9 312RF-1/8	4.5	±45°, 90°	0.110
Rotary lever, indexed secured in both positions	K9 312S-1/8	4.5	±45°, 90°	0.110
Pushbutton	K9 314RF-1/8	25	–	0.075
Cam operation	K9 321RF-1/8	11	–	0.070
Toggle cam operation	K9 324RF-1/8	5	±40°	0.120
Plunger operated	K9 323RF-1/8	32	–	0.050
Cam operated free cam left	K9 325RF-1/8	5	±40°	0.120
Cam operated free cam right	K9 326RF-1/8	5	±40°	0.120
Pivoted lever	K9 329RF-1/8	2*	±40°	0.115
Pedal	K9 331RF-1/8	12	–	0.800
Basic valve for panel mounting actuators	K9 390RF-1/8	35	–	0.060

* at a distance of 100 mm from fulcrum

Parker Hannifin Corporation
Pneumatic Division - Europe

Tel: +45 63 12 83 00 | Email: ps@hymatik.com | www.hymatik.com | Hvidkaervej 27a, DK-5250 Odense SV, Denmark

Order Instructions – 3/2 Way Poppet Valves, Series K9

Actuation	Symbol	Mounting Ø (mm)	Order Instructions Type	Order code
Rotary lever, indexed			K9 312-1/8	**PA 10269**
Rotary lever, spring return	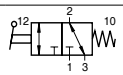		K9 312RF-1/8	**PA 10270**
Rotary lever, indexed secured in both positions			K9 312S-1/8	**PA 10349**
Pushbutton	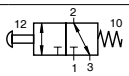		K9 314RF-1/8	**PA 10271**
Cam operation	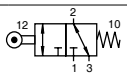		K9 321RF-1/8	**PA 10272**
Toggle cam operation	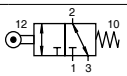		K9 324RF-1/8	**PA 10273**
Plunger operated	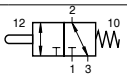		K9 323RF-1/8	**PA 10235**
Cam operated free cam left	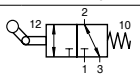		K9 325RF-1/8	**PA 10274**
Cam operated free cam right	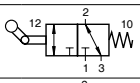		K9 326RF-1/8	**PA 10275**
Pivoted lever	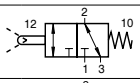		K9 329RF-1/8	**PA 10276**
Pedal	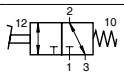		K9 331RF-1/8	**PA 10277**
Panel mounting valve with adaptor for interchangeable actuation	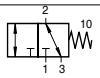		K9 390RF-1/8	**PA 10278**
Rotary lever, indexed		22 30	12T-22 12T-30	**KX 9355** **KX 9314**
Rotary lever, spring return		22 30	12T-RF-22 12T-RF-30	**KX 9356** **KX 9315**
Pushbutton		22 30	13T-RF-22 13T-RF-30	**KX 9357** **KX 9316**
Mushroom pushbutton		22 30	15T-RF-22 15T-RF-30	**KX 9358** **KX 9317**
Locking switch		22 30	16T-22 16T-30	**KX 9359** **KX 9318**
Rotary switch		22 30	17T-22 17T-30	**KX 9360** **KX 9319**
Mushroom switch Emergency Shutdown		22 30	18T-22 18T-30	**KX 9361** **KX 9320**

Tel: +45 63 12 83 00 | Email: ps@hymatik.com | www.hymatik.com | Hvidkaervej 27a, DK-5250 Odense SV, Denmark

Rotary Lever – Type: K9 312..-1/8

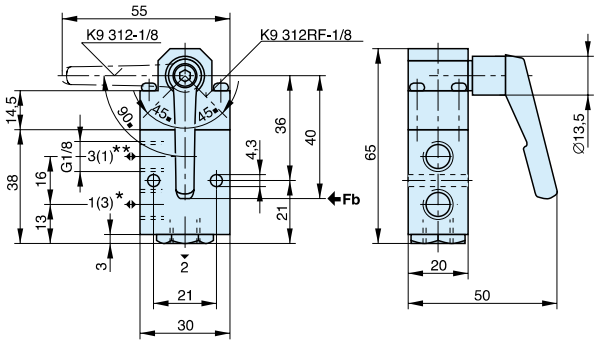

* = P when used as “normally closed“
** = P when used as “normally open“

Plunger Operated – Type: K9 323RF-1/8

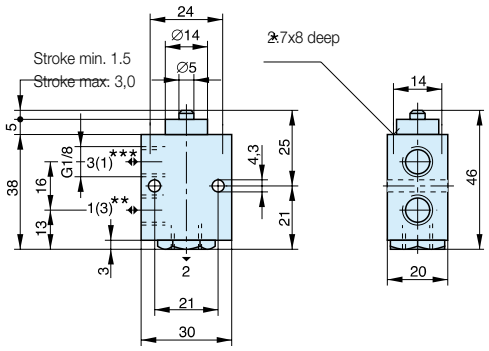

* Self tapping screws CM 3x.. DIN 7500 to be used
** = P when used as “normally closed“
*** = P when used as “normally open“

Pushbutton – Type: K9 314RF-1/8

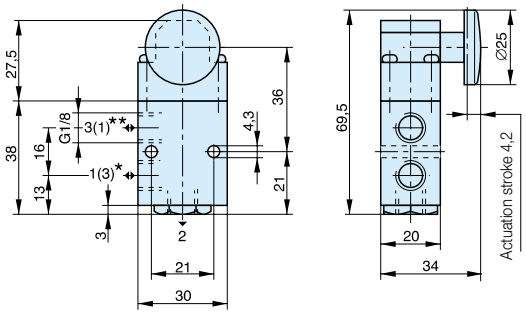

* = P when used as “normally closed“
** = P when used as “normally open“

Cam operation– Type: K9 321RF-1/8

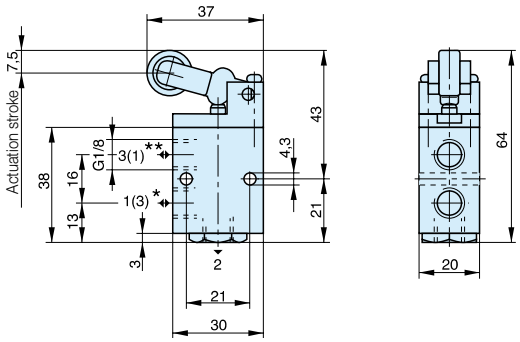

* = P when used as “normally closed“
** = P when used as “normally open“

Tel: +45 63 12 83 00 | Email: ps@hymatik.com | www.hymatik.com | Hvidkaervej 27a, DK-5250 Odense SV, Denmark

Toggle Cam Operation – Type: K9 324RF-1/8

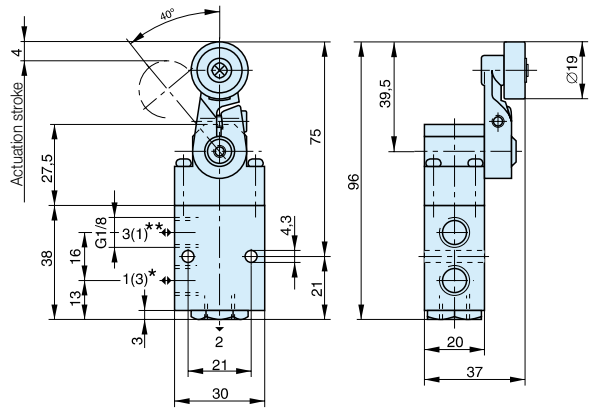

* = P when used as “normally closed“
** = P when used as “normally open“

Pivoted Lever – Type: K9 329RF-1/8

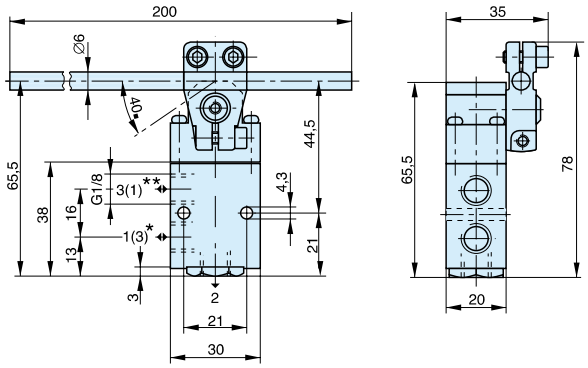

* = P when used as “normally closed“
** = P when used as “normally open“

Cam Operated free cam left / right
Type: K9 325RF-1/8, K9 326RF-1/8

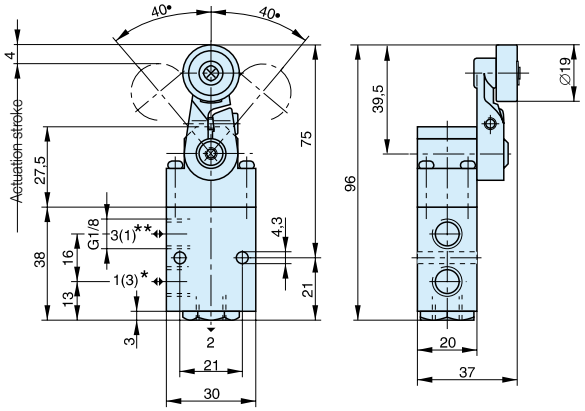

* = P when used as “normally closed“
** = P when used as “normally open“

Pedal – Type: K9 331RF-1/8

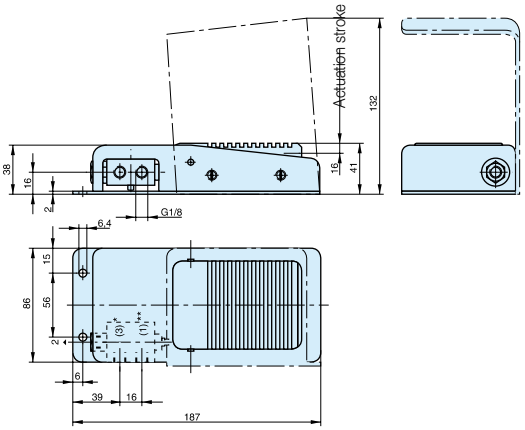

* = P when used as “normally closed“
** = P when used as “normally open“

Basic Valve with adaptor for panel mounting Type: K9 390RF-1/8

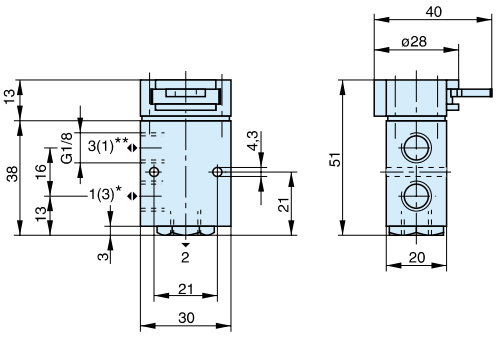

* = P when used as “normally closed“
** = P when used as “normally open“

Mounting holes for mounting diameters 22 and 30 mm

Mounting diameter Ø22 mm **Mounting diameter Ø30 mm**

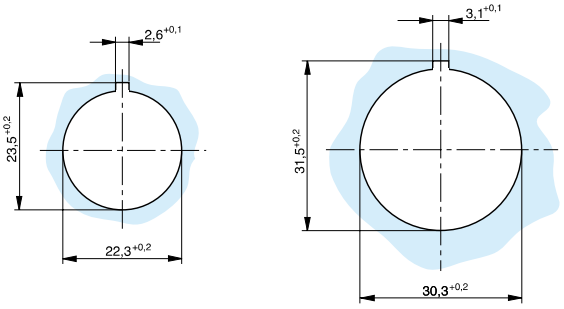

Rotary Lever, indexed – Type: 12T-22, 12T-30

Mounting diameter Ø22 mm **Mounting diameter Ø30 mm**

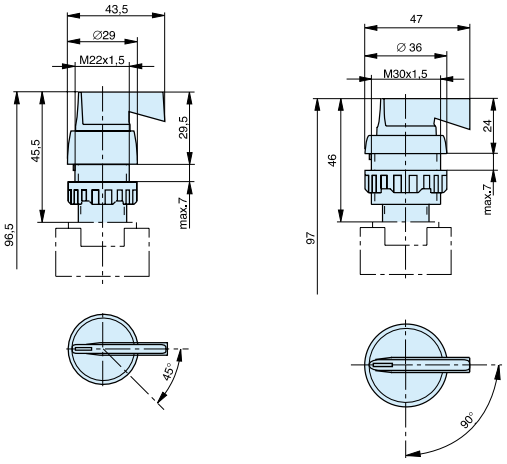

Rotary Lever with spring return Type: 12T-RF-22, 12T-RF-30

Mounting diameter Ø22 mm **Mounting diameter Ø30 mm**

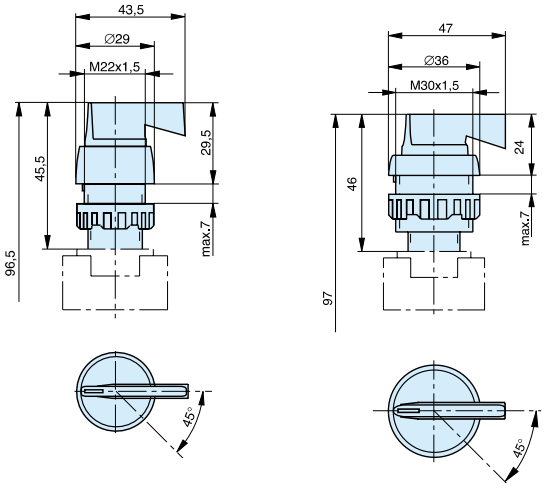

Parker Hannifin Corporation
Pneumatic Division - Europe

Tel: +45 63 12 83 00 | Email: ps@hymatik.com | www.hymatik.com | Hvidkaervej 27a, DK-5250 Odense SV, Denmark

Pushbutton
Type: 13T-RF-22, 13T-RF-30

Mounting diameter Ø22 mm

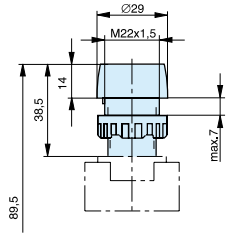

Mounting diameter Ø30 mm

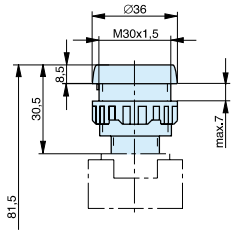

Rotary Switch
Type: 17T-22, 17T-30

Mounting diameter Ø22 mm

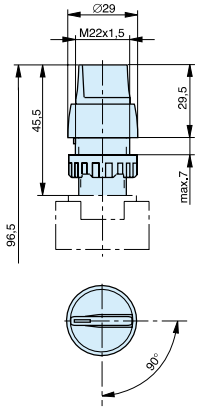

Mounting diameter Ø30 mm

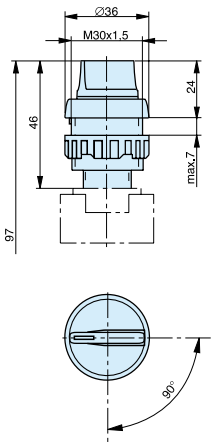

Mushroom Pushbutton
Type: 15T-RF-22, 15T-RF-30

Mounting diameter Ø22 mm

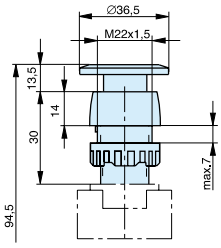

Mounting diameter Ø30 mm

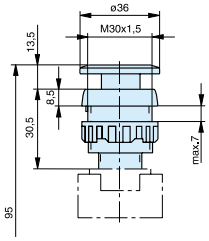

Locking Switch
Type: 16T-22, 16T-30

Mounting diameter Ø22 mm

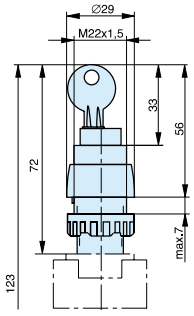

Mounting diameter Ø30 mm

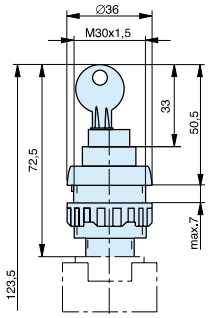

Mushroom Switch (Emergency Shutdown)
Type: 18T-22, 18T-30

Mounting diameter Ø22 mm

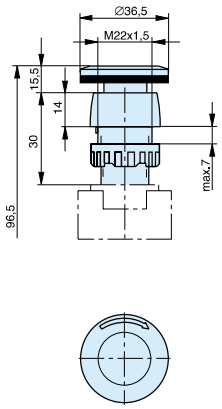

Mounting diameter Ø30 mm

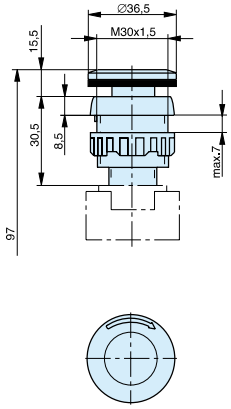

S9 Series Directional Control Valves



Actuation:
- Hand lever
- Pneumatic
- Electrical pilot operated
- Electrical pilot operated with external pilot air
- Panel mounting actuators for mounting diameter to DIN 43696

Versions:
- Normally closed
- Normally open
- With external pilot air
- With biased position
- Version to ATEX Standard

Note: The “normally open“ valve S9 381S-RF-1/8 cannot be used on a P-supply manifold.

3/2 Way Valves – Standard versions

Actuation System	Symbol	Mounting Ø (mm)	Order Instructions Type	Order No.
Hand lever, indexed			S9 311-1/8	**PA 10293**
			S9 311-1/4	**PA 12708**
			S9 311-1/2	**PA 16404**
Hand lever, spring return	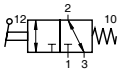		S9 311RF-1/8	**PA 10294**
			S9 311RF-1/4	**PA 12709**
			S9 311RF-1/2	**PA 16405**
Hand lever secured in 2 switching positions			S9 311S-1/4	**PA 12710**
			S9 311S-1/2	**PA 16406**
Rotary lever, indexed			S9 312-1/4	**PA 12711**
			S9 312-1/2	**PA 16407**
Rotary lever, spring return	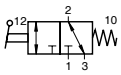		S9 312RF-1/4	**PA 12712**
			S9 312RF-1/2	**PA 16408**
Pneumatic, by permanent signal	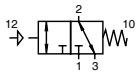		S9 361RF-1/8	**PA 10295**
			S9 361RF-1/4	**PA 12713**
			S9 361RF-1/2	**PA 16409**
Pneumatic, by impulse	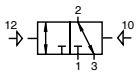		S9 361-1/8	**PA 10296**
			S9 361-1/4	**PA 12714**
			S9 361-1/2	**PA 16410**
Pneumatic, by impulse, with biased position	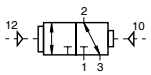		S9 362-1/4	**PA 12715**
			S9 362-1/2	**PA 16411**
Basic valve for panel mounting	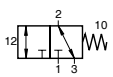		S9 390RF-1/8	**PA 10307**

Parker Hannifin Corporation
Pneumatic Division - Europe

Tel: +45 63 12 83 00 | Email: ps@hymatik.com | www.hymatik.com | Hvidkaervej 27a, DK-5250 Odense SV, Denmark

3/2 Way Valves – Standard versions

Actuation System	Symbol	Mounting Ø (mm)	Order Instructions Type	Order No.
Rotary lever, indexed		22	12T-22	**KX 9355**
		30	12T-30	**KX 9314**
Rotary lever, spring return		22	12T-RF-22	**KX 9356**
		30	12T-RF-30	**KX 9315**
Pushbutton		22	13T-RF-22	**KX 9357**
		30	13T-RF-30	**KX 9316**
Mushroom pushbutton		22	15T-RF-22	**KX 9358**
		30	15T-RF-30	**KX 9317**
Locking switch		22	16T-22	**KX 9359**
		30	16T-30	**KX 9318**
Rotary switch		22	17T-22	**KX 9360**
		30	17T-30	**KX 9319**
Mushroom pushbutton emergency-0ff		22	18T-22	**KX 9361**
		30	18T-30	**KX 9320**
Electrical by permanent signal	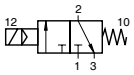		S9 381RF-1/8-NC-..	**PA 10297-..33**
			S9 381RF-1/4-NC-..	**PA 12716-..33**
			S9 381RF-1/2-NC-..	**PA 16412-..33**
	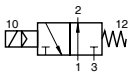		S9 381RF-1/8-NO-..	**PA 10298-..33**
			S9 381RF-1/4-NO-..	**PA 12717-..33**
			S9 381RF-1/2-NO-..	**PA 16413-..33**
with external pilot air	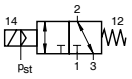		S9 381S-RF-1/8-..	**PA 10300-..33**
			S9 381S-RF-1/4-..	**PA 12719-..33**
			S9 381S-RF-1/2-..	**PA 16415-..33**
Electrical by impulse	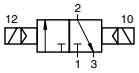		S9 381-1/8-..	**PA 10299-..33**
			S9 381-1/4-..	**PA 12718-..33**
			S9 381-1/2-..	**PA 16414-..33**
Electrical, by impulse, with external pilot air	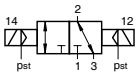		S9 381S-1/8-..	**PA 10301-..33**
			S9 381S-1/4-..	**PA 12720-..33**
			S9 381S-1/2-..	**PA 16417-..33**
Electrical by impulse, with biased position	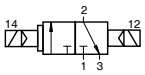		S9 382-1/4-..	**PA 12721-..33**
			S9 382-1/2-..	**PA 16418-..33**
with external pilot air	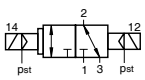		S9 382S-1/4-..	**PA 12722-..33**
			S9 382S-1/2-..	**PA 16419-..33**

Solenoid version	Nominal voltage	Applicable for	Key code	ATEX Type additon
Standard version	230V 50/60Hz	110 V =	61	–
	24V =	60V 50/60Hz	02	–
Low wattage version	24V =		13	–
	230V 50/60Hz		69	–

Tel: +45 63 12 83 00 | Email: ps@hymatik.com | www.hymatik.com | Hvidkaervej 27a, DK-5250 Odense SV, Denmark

EX Area versions to ATEX Standard
Category, type of ignition protection

Single valve: ⟨Ex⟩ II 2G c T4 T135°C -10°C≤Ta≤+60°C
Solenoid/individual use: ⟨Ex⟩ II 2G EEx m II T5 -20°C≤Ta≤+50°C
Solenoid/manifold mounting: ⟨Ex⟩ II 2G EEx m II T5 -20°C≤Ta≤+40°C

Solenoid version	Nominal voltage	Applicable for	Key code	ATEX Type additon
Solenoid – with cable 1.2 m	24V =		48	ATEX
– with cable 3 m	24V =		45	ATEX
– with cable 5 m	24V =		46	ATEX
– with cable 10 m	24V =		47	ATEX
– with cable 1.2 m	24V 50/60Hz		99	ATEX
– with cable 1.2 m	110V 50/60Hz		97	ATEX
– with cable 1.2 m	230V 50/60Hz		98	ATEX

Example for valves in ATEX-Version:
– for valves Series S9-G1/8, S9-G1/4, S9-G1/2
Please add behind the Standard Order No. “ATEX“
Type: S9 381RF-1/8-NC-4633
Order No. PA10297-4633ATEX

Parker Hannifin Corporation
Pneumatic Division - Europe

Tel: +45 63 12 83 00 | Email: ps@hymatik.com | www.hymatik.com | Hvidkaervej 27a, DK-5250 Odense SV, Denmark

Order Instructions – 5/2 Way Valves – Standard versions

Actuation System	Symbol	Mounting Ø (mm)	Order Instructions Type	Order No.
Hand lever, indexed			S9 511-1/8	**PA 10308**
			S9 511-1/4	**PA 12671**
			S9 511-1/2	**PA 16367**
Hand lever, spring return	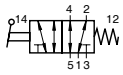		S9 511RF-1/8	**PA 10309**
			S9 511RF-1/4	**PA 12672**
			S9 511RF-1/2	**PA 16366**
Hand lever secured in 2 switching positions			S9 511S-1/8	**PA 10368**
			S9 511S-1/4	**PA 12673**
			S9 511S-1/2	**PA 16368**
Rotary lever, indexed				
			S9 512-1/4	**PA 12674**
			S9 512-1/2	**PA 16378**
Rotary lever, spring return				
			S9 512RF-1/4	**PA 12675**
			S9 512RF-1/2	**PA 16379**
Pneumatic, by permanent signal	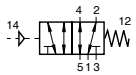		S9 561RF-1/8	**PA 10310**
			S9 561RF-1/4	**PA 12676**
			S9 561RF-1/2	**PA 16165**
Pneumatic, by impulse	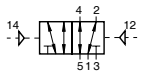		S9 561-1/8	**PA 10311**
			S9 561-1/4	**PA 12677**
			S9 561-1/2	**PA 16166**
Pneumatic, by impulse, with biased position	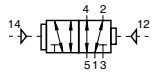			
			S9 562-1/4	**PA 12678**
			S9 562-1/2	**PA 16167**
Basic valve for panel mounting			S9 590RF-1/8	**PA 10320**
Rotary lever, indexed		22	12T-22	**KX 9355**
		30	12T-30	**KX 9314**
Rotary lever, spring return		22	12T-RF-22	**KX 9356**
		30	12T-RF-30	**KX 9315**
Pushbutton		22	13T-RF-22	**KX 9357**
		30	13T-RF-30	**KX 9316**
Mushroom pushbutton		22	15T-RF-22	**KX 9358**
		30	15T-RF-30	**KX 9317**
Locking switch		22	16T-22	**KX 9359**
		30	16T-30	**KX 9318**

Tel: +45 63 12 83 00 | Email: ps@hymatik.com | www.hymatik.com | Hvidkaervej 27a, DK-5250 Odense SV, Denmark

Order Instructions - 5/2 Way Valves - Standard Versions

Actuation System	Symbol	Mounting Ø (mm)	Order Instructions Type	Order No.
Rotary switch		22	17T-22	**KX 9360**
		30	17T-30	**KX 9319**
Mushroom pushbutton Emergency-Off		22	18T-22	**KX 9361**
		30	18T-30	**KX 9320**
Electrical, by permanent signal	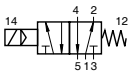		S9 581RF-1/8-..	**PA 10312-..33**
			S9 581RF-1/4-..	**PA 12679-..33**
			S9 581RF-1/2-..	**PA 16171-..33**
with external pilot air	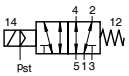		S9 581S-RF-1/8-..	**PA 10314-..33**
			S9 581S-RF-1/4-..	**PA 12681-..33**
			S9 581S-RF-1/2-..	**PA 16174-..33**
Electrical, by impulse	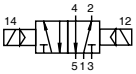		S9 581-1/8-..	**PA 10313-..33**
			S9 581-1/4-..	**PA 12680-..33**
			S9 581-1/2-..	**PA 16172-..33**
with external pilot air	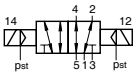		S9 581S-1/8-..	**PA 10315-..33**
			S9 581S-1/4-..	**PA 12682-..33**
			S9 581S-1/2-..	**PA 16175-..33**

Solenoid version	Nominal voltage	Applicable for	Key code	ATEX Type additon
Standard version	230V 50/60Hz	110 V =	61	–
	24V =	60V 50/60Hz	02	–
Low wattage version	24V =		13	–
	230V 50/60Hz		69	–

EX Area versions to ATEX Standard
Category, type of ignition protection
Single valve: ⟨Ex⟩ II 2G c T4 T135°C -10°C≤Ta≤+60°C
Solenoid/individual use: ⟨Ex⟩ II 2G EEx m II T5 -20°C≤Ta≤+50°C
Solenoid/manifold mounting: ⟨Ex⟩ II 2G EEx m II T5 -20°C≤Ta≤+40°C

Solenoid version	Nominal voltage	Applicable for	Key code	ATEX Type additon
Solenoid – with cable 1.2 m	24V =		48	ATEX
– with cable 3 m	24V =		45	ATEX
– with cable 5 m	24V =		46	ATEX
– with cable 10 m	24V =		47	ATEX
– with cable 1.2 m	24V 50/60Hz		99	ATEX
– with cable 1.2 m	110V 50/60Hz		97	ATEX
– with cable 1.2 m	230V 50/60Hz		98	ATEX

Example for valves in ATEX-Version:
– for valves Series S9-G1/8, S9-G1/4, S9-G1/2
Please add behind the Standard Order No. “ATEX“
Type: S9 381RF-1/8-NC-4633
Order No. PA10297-4633ATEX

Tel: +45 63 12 83 00 | Email: ps@hymatik.com | www.hymatik.com | Hvidkaervej 27a, DK-5250 Odense SV, Denmark

Order Instructions – 5/3 Way Valves – Standard versions

Actuation System	Symbol	Order Instructions Type	Order No.
Hand lever, secured in 3 operating positions	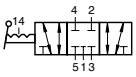	S9 511G-1/8	**PA 10321**
		S9 511G-1/4	**PA 12687**
		S9 511G-1/2	**PA 16369**
	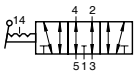	S9 511E-1/8	**PA 10322**
		S9 511E-1/4	**PA 12688**
		S9 511E-1/2	**PA 16370**
	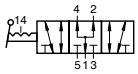	S9 511B-1/8	**PA 10323**
		S9 511B-1/4	**PA 12689**
		S9 511B-1/2	**PA 16371**
Hand lever, spring return to middle position	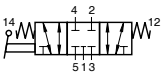	S9 511RFG-1/8	**PA 10324**
		S9 511RFG-1/4	**PA 12690**
		S9 511RFG-1/2	**PA 16372**
	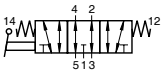	S9 511RFE-1/8	**PA 10325**
		S9 511RFE-1/4	**PA 12691**
		S9 511RFE-1/2	**PA 16373**
	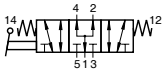	S9 511RFB-1/8	**PA 10326**
		S9 511RFB-1/4	**PA 12692**
		S9 511RFB-1/2	**PA 16374**
Hand lever, secured in 3 operating positions	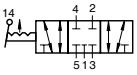	S9 511SG-1/8	**PA 10327**
		S9 511SG-1/4	**PA 12693**
		S9 511SG-1/2	**PA 16375**
	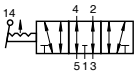	S9 511SE-1/8	**PA 10328**
		S9 511SE-1/4	**PA 12694**
		S9 511SE-1/2	**PA 16376**
	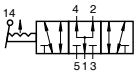	S9 511SB-1/8	**PA 10329**
		S9 511SB-1/4	**PA 12695**
		S9 511SB-1/2	**PA 16377**
Rotary lever, indexed in 3 operating positions	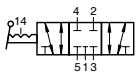	S9 512G-1/4	**PA 12696**
		S9 512G-1/2	**PA 16380**
	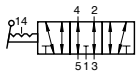	S9 512E-1/4	**PA 12697**
		S9 512E-1/2	**PA 16381**
	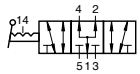	S9 512B-1/4	**PA 12698**
		S9 512B-1/2	**PA 16382**

Parker Hannifin Corporation
Pneumatic Division - Europe

Tel: +45 63 12 83 00 | Email: ps@hymatik.com | www.hymatik.com | Hvidkaervej 27a, DK-5250 Odense SV, Denmark

Actuation System	Symbol	Order Instructions Type	Order No.
Rotary lever, spring return to middle position	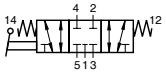	S9 512RFG-1/4	**PA 12699**
		S9 512RFG-1/2	**PA 16383**
	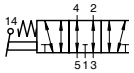	S9 512RFE-1/4	**PA 12700**
		S9 512RFE-1/2	**PA 16384**
	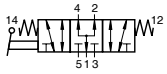	S9 512RFB-1/4	**PA 12701**
		S9 512RFB-1/2	**PA 16385**
Pneumatic, by permanent signal	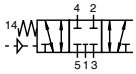	S9 561RFG-1/8	**PA 10330**
		S9 561RFG-1/4	**PA 12702**
		S9 561RFG-1/2	**PA 16168**
spring return to middle position	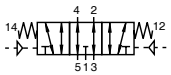	S9 561RFE-1/8	**PA 10331**
		S9 561RFE-1/4	**PA 12703**
		S9 561RFE-1/2	**PA 16169**
	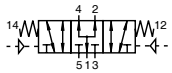	S9 561RFB-1/8	**PA 10332**
		S9 561RFB-1/4	**PA 12704**
		S9 561RFB-1/2	**PA 16170**
Electrical by permanent signal	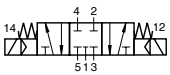	S9 581RFG-1/8-..	**PA 10333-..33**
		S9 581RFG-1/4-..	**PA 12705-..33**
		S9 581RFG-1/2-..	**PA 16176-..33**
spring return to middle position	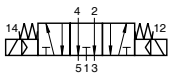	S9 581RFE-1/8-..	**PA 10334-..33**
		S9 581RFE-1/4-..	**PA 12706-..33**
		S9 581RFE-1/2-..	**PA 16177-..33**
	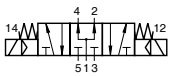	S9 581RFB-1/8-..	**PA 10335-..33**
		S9 581RFB-1/4-..	**PA 12707-..33**
		S9 581RFB-1/2-..	**PA 16178-..33**

Parker Hannifin Corporation
Pneumatic Division - Europe

Tel: +45 63 12 83 00 | Email: ps@hymatik.com | www.hymatik.com | Hvidkaervej 27a, DK-5250 Odense SV, Denmark

Actuation System	Symbol	Order Instructions Type	Order No.
Electrical by permanent signal	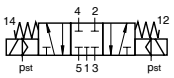	S9 581S-RFG-1/8-.. S9 581S-RFG-1/4-..	**PA 10377-..33** **PA 12925-..33**
spring return to middle position	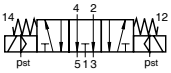	S9 581S-RFE-1/8-.. S9 581-RFE-1/4-..	**PA 10379-..33** **PA 12923-..33**
with external pilot air	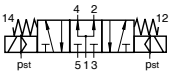	S9 581S-RFB-1/8-.. S9 581S-RFB-1/4-..	**PA 10378-..33** **PA 12924-..33**

Solenoid version	Nominal voltage	Applicable for	Key code	ATEX Type additon
Standard version	230V 50/60Hz	110 V =	61	–
	24V =	60V 50/60Hz	02	–
Low wattage version	24V =		13	–
	230V 50/60Hz		69	–

Single valve: ⟨Ex⟩ II 2G c T4 T135°C -10°C≤Ta≤+60°C
Solenoid/individual use: ⟨Ex⟩ II 2G EEx m II T5 -20°C≤Ta≤+50°C
Solenoid/manifold mounting: ⟨Ex⟩ II 2G EEx m II T5 -20°C≤Ta≤+40°C

Solenoid version	Nominal voltage	Applicable for	Key code	ATEX Type additon
Solenoid – with cable 1.2 m	24V =		48	ATEX
– with cable 3 m	24V =		45	ATEX
– with cable 5 m	24V =		46	ATEX
– with cable 10 m	24V =		47	ATEX
– with cable 1.2 m	24V 50/60Hz		99	ATEX
– with cable 1.2 m	110V 50/60Hz		97	ATEX
– with cable 1.2 m	230V 50/60Hz		98	ATEX

Example for valves in ATEX-Version:
– for valves Series S9-G1/8, S9-G1/4, S9-G1/2
Please add behind the Standard Order No. “ATEX“
Type: S9 381RF-1/8-NC-4633
Order No. PA10297-4633ATEX

Tel: +45 63 12 83 00 | Email: ps@hymatik.com | www.hymatik.com | Hvidkaervej 27a, DK-5250 Odense SV, Denmark

3/2, 5/2 and 5/3 Directional Control Valves
Series S9-G1/8 / G1/4 / G1/2

Characteristics	Series S9 G1/8			Series S9 G1/4			Series S9 G1/2		
Actuation	Manual control	pneumatic	electrical	Manual control	pneumatic	electrical	Manual control	pneumatic	electrical
General Features									
Type	Spool valve			Spool valve			Spool valve		
Mounting	2 Screws M5			2 Screws M6			2 Screws M6		
Tube connection	Thread			Thread			Thread		
Thread	G1/8 – 7.4 deep			G1/4 – 11 deep			G1/2 – 16 deep		
Installation	In any position			In any position			In any position		
Ambient temperature range (1	-10 °C to +60 °C *			-10 °C to +60 °C*			-10 °C to +60 °C*		
Medium temperature range (1	-10 °C to +60 °C *			-10 °C to +60 °C*			-10 °C to +60 °C*		
Medium	Filtered compressed air								
Lubrication	With or without oil mist lubrication (We recommend the use of mineral oil type VG 32 to ISO 3448)								
Pneumatic Characteristics									
Nominal pressure (bar)	6			6			6		
Operating pressure range (bar)	0–10 (10	–	–	0–10	–	–	0–10	–	–
– permanent signal version (bar)	–	0–10	2–10	–	0–10	2–10	–	0–10	2.2–10
– impulse version (bar)	–	0–10	2–10	–	0–10	2–10	–	0–10	2.2–10
– with external pilot air (bar)	–	–	0–10	–	–	0–10	–	–	0–10
Nominal flow	500 l/min (450 bei 3/2 Way Valve)			1300 l/min(7			3500 l/min(8		
Actuation									
Manual control	Direct			Direct			Direct		
Stroke	4.5 mm			6.5 mm			9.4 mm		
Actuation force (N)	7 (2 10 (3			10 (2 15 (3			15 (2 40 (3		
Pneumatic	Direct			Direct			Direct		
Actuation pressure range									
– permanent signal version (bar)	–	2–10	2–10	2–10	2–10	2–10	–	2.2–10(9	2.2–10
– impulse version (bar)	–	1.5–10	1.5–10	1.5–10	1.5–10(4	1.5–10(4	–	1.5–10(5	1.5–10(4
Electrical	Electrical pilot operated						Electrical pilot operated		
Voltage type	Alternating current (50/60Hz)			Direct current			Alternating current (50/60Hz)		
Nominal voltage									
– Standard version	230 V ±10%			24 V ±10%			Other voltages on request		
– Low wattage version	230 V ±10%			24 V ±10%			230 V ±10%		
Initial power consumption	G1/8	G1/4	G1/2	G1/8	G1/4	G1/2	G1/8	G1/4	G1/2
– Standard version (VA)	8.5	8.5	11.0	2.5	2.5	4.8	8.5	8.5	11.0
– Low wattage version (VA)	6.6	6.6	7.8	2.1	2.1	2.7	6.6	6.6	7.8
Continuous consumption	G1/8	G1/4	G1/2	G1/8	G1/4	G1/2	G1/8	G1/4	G1/2
– Standard version (VA)	6.0	6.0	8.5	2.5	2.5	4.8	6.0	6.0	8.5
– Low wattage version (VA)	3.9	4.9	4.9	2.1	2.1	2.7	3.9	4.9	4.9
Duty cycle	100%			100%			100%		
Electrical protection	IP65 to DIN 40050 (applise only to solenoid with plug)								
Connection	Plug to DIN EN 175301-803 form B – industrial standard (6								

* Valve Manifold Assemblies with electrically actuated valves -10 to +50°C
(1 Note: For use below freezing point please contact us
(2 Actuation force for valves without spring return, actuation with rotary lever: 5N
(3 Actuation force for valves with spring return, Actuation with rotary lever:15N
(4 Only for version with biased position 2 – 10 bar, pneumatically actuated 2 – 10 bar, electrically actuated 2.5 – 10 bar
(5 Version with biased position 2.5 – 10 bar
(6 Low wattage version: Plug to DIN EN 175301-803 form A
(7 Version "middle position vented" 1000 l/min
(8 Version "middle position vented" 3300 l/min Version "middle position pressured" 3600 l/min
(9 5/3 Way Valve 2.5 – 10 bar
(10 Valves with panel mounting actuators 2 – 10 bar

Parker Hannifin Corporation
Pneumatic Division - Europe

Tel: +45 63 12 83 00 | Email: ps@hymatik.com | www.hymatik.com | Hvidkaervej 27a, DK-5250 Odense SV, Denmark

3/2, 5/2 and 5/3 Way Valves for use in EX areas
Series S9-G1/8 / G1/4 / G1/2

Characteristics	Series S9 G1/8			Series S9 G1/4			Series S9 G1/2		
Actuation	Manual Control	pneumatic	electrical	Manual Control	pneumatic	electrical	Manual Control	pneumatic	electrical
General Features									
Type	Spool valve			Spool valve			Spool valve		
Mounting	2 screws M5			2 Screws M6			2 Screws M6		
Tube connection	Thread			Thread			Thread		
Thread	G1/8 – 7.4 deep			G1/4 – 11 deep			G1/2 – 16 deep		
Installation	In any position			In any position			In any position		
Ambient temperature range ([1]	-10 °C to +60 °C *			-10 °C to +60 °C *			-10 °C to +60 °C *		
Medium temperature range ([1]	-10 °C to +60 °C *			-10 °C to +60 °C *			-10 °C to +60 °C *		
Medium	Filtered, unlibricated compressed air – free from water and dirt to ISO8573-1			Solids: Class 7 particle size <40 µm for gas Water content: pressure dew point + 3°C, Class 4, but at least 5°C below minimum operating temperature			Solids: Class 7 particle size <40 µm for gas Water content: pressure dew point + 3°C, Class 4, but at least 5°C below minimum o perating temperature		
Pneumatic Characteristics									
Nominal pressure (bar)	6			6			6		
Operating pressure range (bar)	0–8 ([10	–	–	0–8	–	–	0–8	–	–
– permanent signal version (bar)	–	0–8	2–8	–	0–8	2–8	–	0–8	2.2–8
– impulse version (bar)	–	0–8	1.5–8([4	–	0–8	1.5–8([4	–	0–8	1.5–8([4
– with external pilot air (bar)	–	–	0–8	–	–	0–8	–	–	0–8
Nominal flow	500 l/min (450 bei 3/2 Way Valve)			1300 l/min ([7			3500 l/min ([8		
Actuation									
Manual control	Direct			Direct			Direct		
Stroke	4.5 mm			6.5 mm			9.4 mm		
Actuation force (N)	7 ([2] 10 ([3]			10 ([2] 15 ([3]			15 ([2] 40 ([3]		
Pneumatic	Direct			Direct			Direct		
Actuation pressure range									
– permanent signal version (bar)	–	2–8	2–8	2–8	2–8	2–8	–	2.2–8([9	2.2–8
– impulse version (bar)	–	1.5–8	1.5–8([4	1.5–8	1.5–8([4	1.5–8([4	–	1.5–8([5	1.5–8([4
Electrical	Electrical pilot operated								
Certification	EC Type Test Certificate for single valve: not required for mechanical units in II 2G			EC Type Test Certificate for solenoid: PTB-No. 03 Ex IEC 2019X and PTB 03 ATEX 2018X toT5			EC Type Test Certificate for solenoid: PTB-No. 03 Ex IEC 2019X and PTB 03 ATEX 2018X toT5		
Category, type of ignition protection	Single valve II 2G c T4T135°C-10°C≤Ta≤+60°C			Solenoid/individual use: II 2G EEx m II T5 -20°C≤Ta≤+50°C Solenoid/manifold mounting: II 2G EEx m II T5 -20°C≤Ta≤+40°C			Solenoid/individual use: II 2G EEx m II T5 -20°C≤Ta≤+50°C Solenoid/manifold mounting: II 2G EEx m II T5 -20°C≤Ta≤+40°C		
Voltage type	Alternating current (50/60Hz)			Direct current					
Nominal voltage	230 V ±10%			24 V ±10%			Other voltages on request		
	110 V ±10%								
	24 V ±10%								
Power rating at U_N	G1/8, G1/4, G1/2			G1/8, G1/4, G1/2					
	3.1 VA (230V)			3.3 VA (24V)					
	3.0 VA (110V)								
	2.5 VA (24V)								
Max. power at Un ([6	G1/8, G1/4, G1/2			G1/8, G1/4, G1/2					
	2.9 VA (230V)			3.0 VA (24V)					
	2.8 VA (110V)								
	2.4 VA (24V)								
Electrical protection	IP65 (applise only to solenoid with cable)								
Connection	Cable – cable lengths see Order Instructions								

* Valve Manifold Assemblies with electrically actuated valves -10 to +50°C
([1 Note: For use below freezing point please contact us
([2 Actuation force for valves without spring return, Actuation with rotary lever: 5N
([3 Actuation force for valves with spring return, actuation with rotary lever: 15N
([4 Only for version with biased position pneumatically actuated 2 – 8 bar, electrically actuated 2.5 – 8 bar
([5 Version with biased position 2.5 – 8 bar
([6 Maximum power if warmed up to termal load limit
([7 Version "middle position vented" 1000 l/min
([8 Version "middle position vented" 3300 l/min, Version "middle position pressured" 3600 l/min
([9 5/3 Way Valve 2.5 – 8 bar
([10 Valves with panel mounting actuators 2 – 8 bar

Tel: +45 63 12 83 00 | Email: ps@hymatik.com | www.hymatik.com | Hvidkaervej 27a, DK-5250 Odense SV, Denmark

Valve Combinations with Logic Elements
3/2, 5/2 and 5/3 Way Valves



Actuation Systems:
Pneumatic
AND
OR
TIMER
- Electrical pilot operated

Versions:
- Freely selectable types
- See Order information
- All Timer-Versions on request

Possible combinations:

* RFG = middle position closed
RFE = middle position exhausted
RFB = middle position pressurized

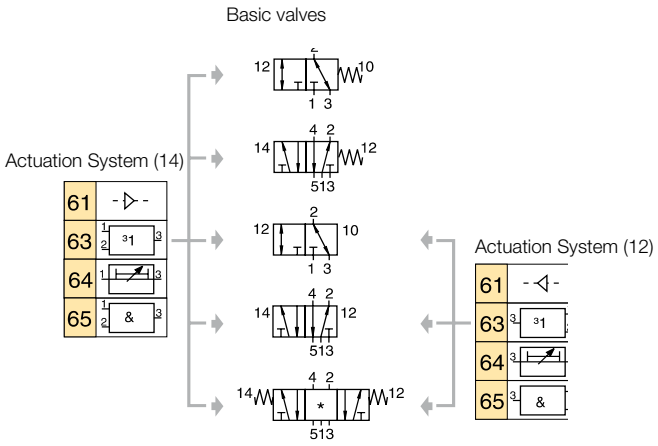

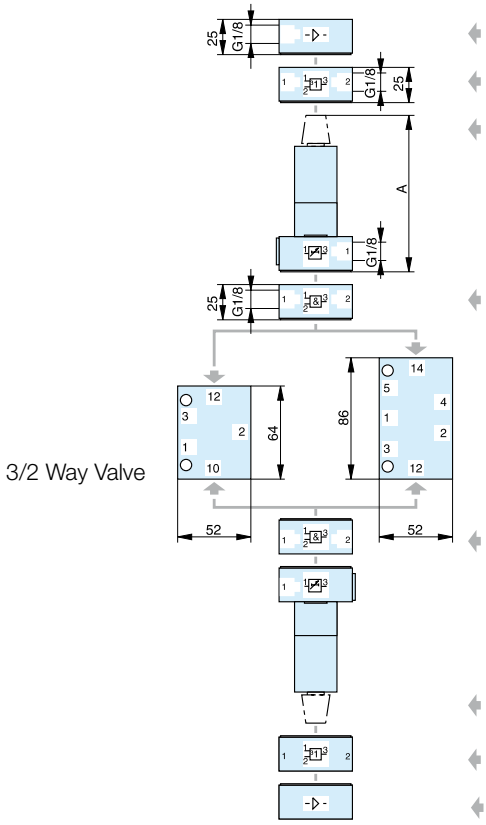

3/2 Way Valve

Pneumatic Actuation 61
OR Actuation 63
Timer Actuation 64
Standard version: Countersunk adjustment screw
On request: Rotary knob version
AND Actuation 65

Dimension Table and adjustment ranges	
Adjustment range [s]	Dimension A [mm]
0.1 to 15	103 (133*)
0.1 to 30	117 (147*)
0.1 to 60	150 (180*)

* Version with rotary knob (optional)

5/2 and 5/3 Way Valves

AND Actuation 65
Timer Actuation 64
Standard version: Countersunk adjustment screw
On request: Rotary knob version
OR Actuation System 63
Pneumatic Actuation 61

Dimension Table and adjustment ranges	
Adjustment range [s]	Dimension A [mm]
0.1 to 15	103 (133*)
0.1 to 30	117 (147*)
0.1 to 60	150 (180*)

* Version with rotary knob (optional)

Tel: +45 63 12 83 00 | Email: ps@hymatik.com | www.hymatik.com | Hvidkaervej 27a, DK-5250 Odense SV, Denmark

Valve Combinations with Logic Elements
3/2, 5/2 and 5/3 Way Valves

Order Instructions

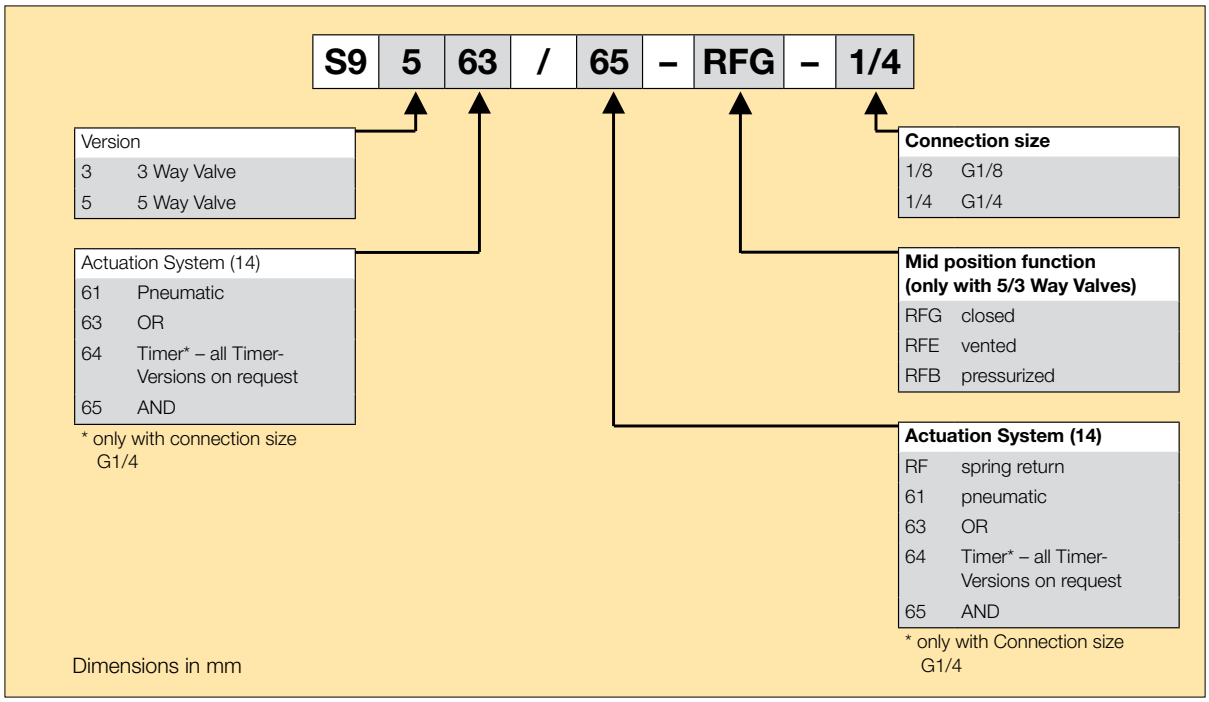

Tel: +45 63 12 83 00 | Email: ps@hymatik.com | www.hymatik.com | Hvidkaervej 27a, DK-5250 Odense SV, Denmark

3/2 Way Lever Operated Valves

G1/8 Hand lever actuated
Type: S9 311-1/8, S9 311RF-1/8

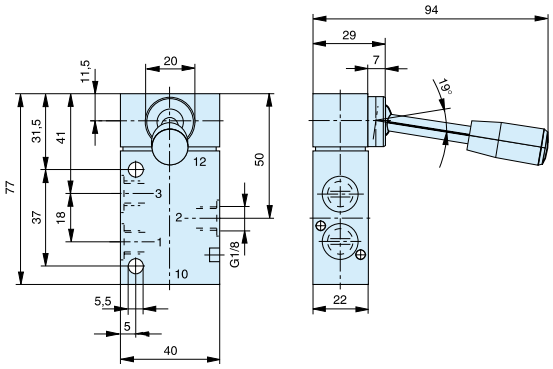

G1/4 Hand lever actuated
Type: S9 311-1/4, S9 311RF-1/4

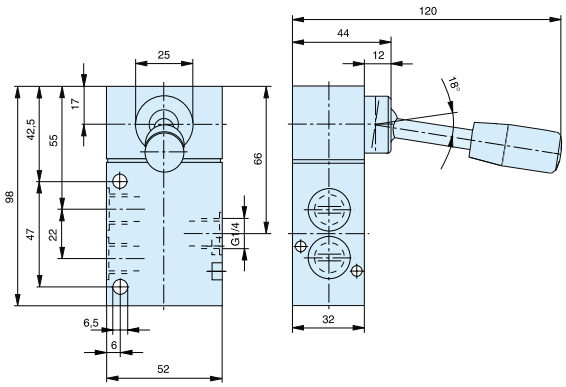

G1/4 Safety hand lever actuated
Type: S9 311S-1/4

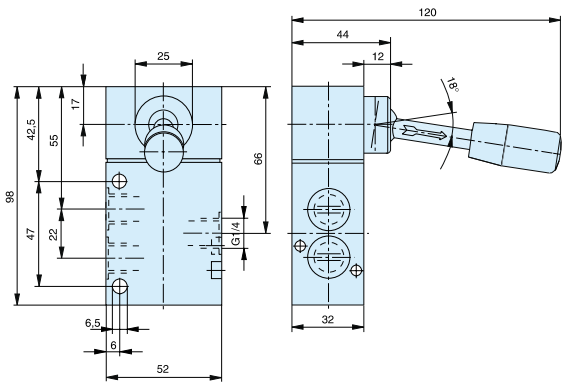

G1/2 Hand lever actuated
Type: S9 311-1/2, S9 311RF-1/2

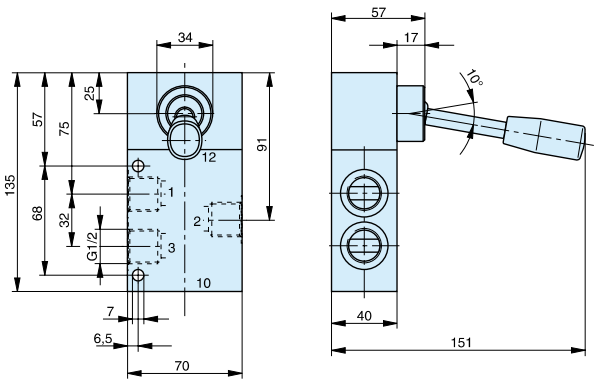

G1/2 Safety hand lever actuated
Type: S9 311S-1/2

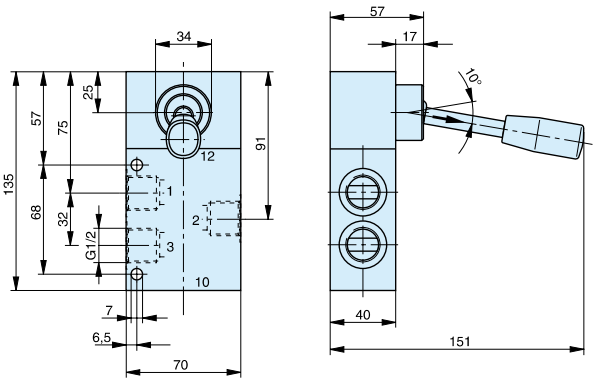

Tel: +45 63 12 83 00 | Email: ps@hymatik.com | www.hymatik.com | Hvidkaervej 27a, DK-5250 Odense SV, Denmark

5/2 Way Lever Operated Valves

G1/8 Hand lever actuated
Type: S9 511-1/8, S9 511RF-1/8

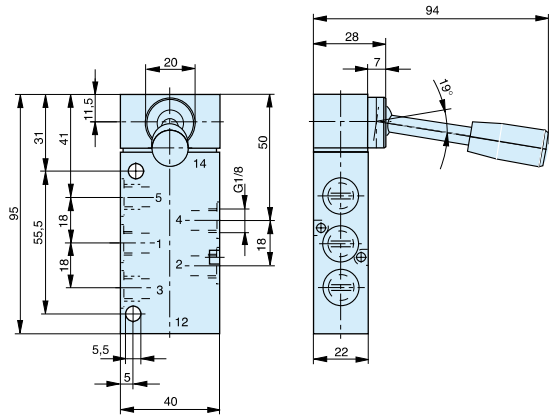

G1/8 Safety Hand lever actuated
Type: S9 511S.-1/8

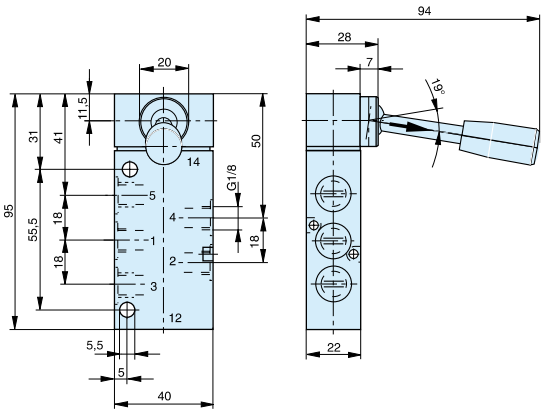

G1/4 Hand lever actuated
Type: S9 511-1/4, S9 511RF-1/4

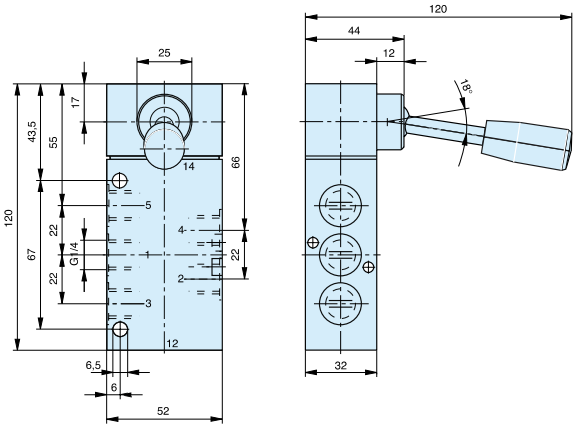

G1/4 Safety hand lever actuated
Type: S9 511S-1/4

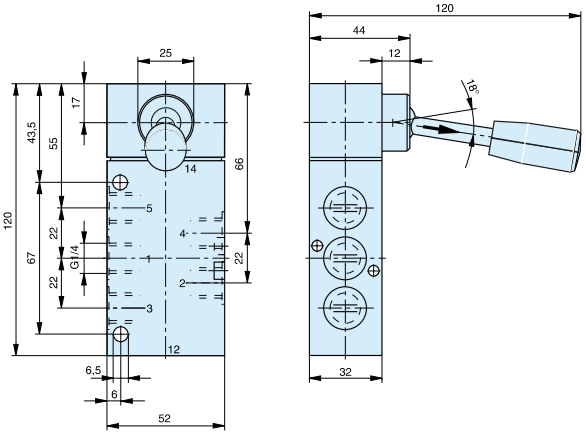

G1/2 Hand lever actuated
Type: S9 511-1/2, S9 511RF-1/2

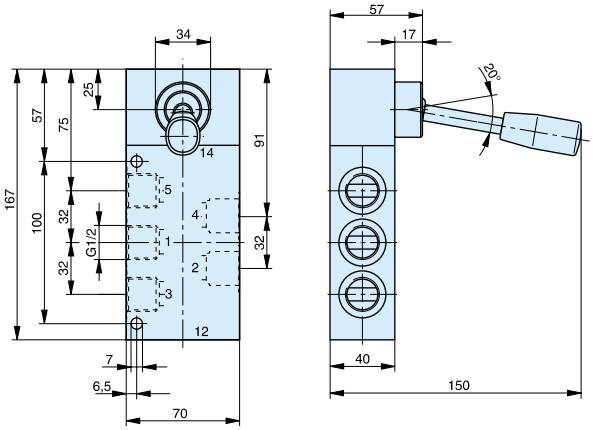

G1/2 Safety hand lever actuated
Type: S9 511S-1/2

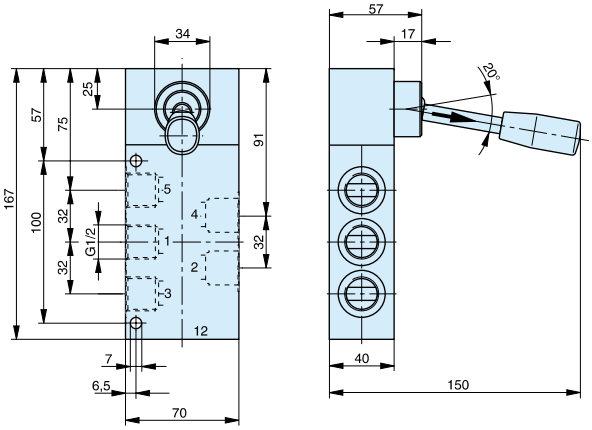

Tel: +45 63 12 83 00 | Email: ps@hymatik.com | www.hymatik.com | Hvidkaervej 27a, DK-5250 Odense SV, Denmark

5/3 Way Lever Operated Valves

G1/8 Hand lever actuated
Type: S9 511.-1/8, S9 511RF.-1/8

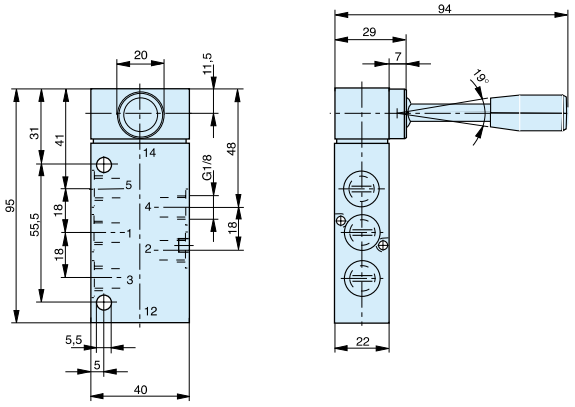

G1/8 Safety Hand lever actuated
Type: S9 511S.-1/8

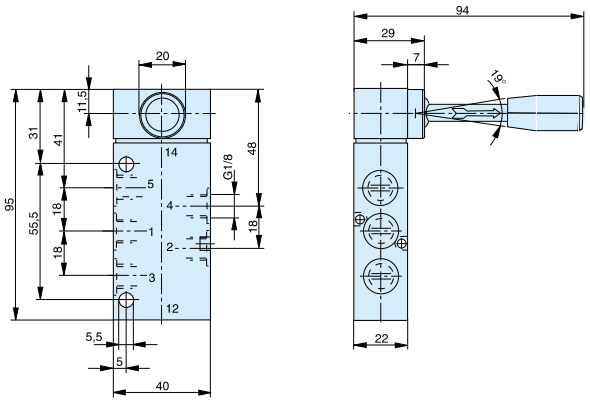

G1/4 Hand lever actuated
Type: S9 511.-1/4, S9 511RF.-1/4

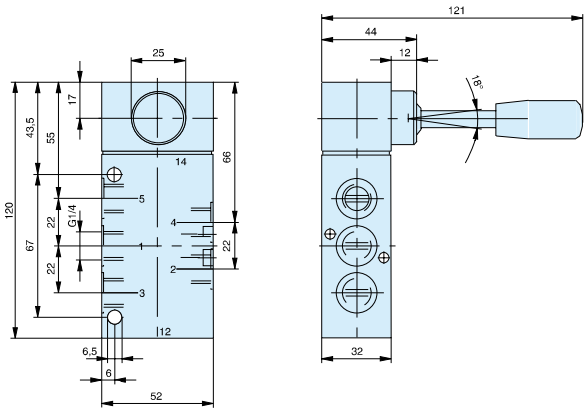

G1/4 Safety hand lever actuated
Type: S9 511S.-1/4

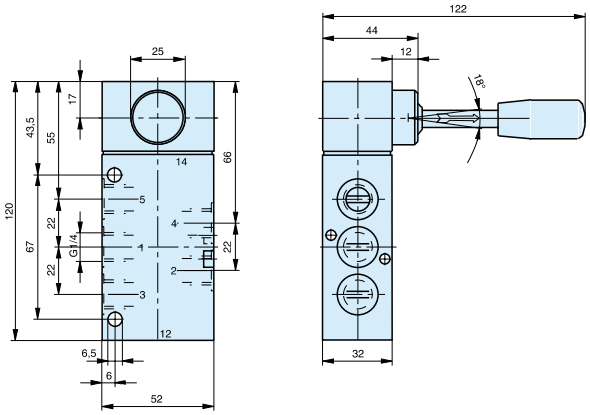

G1/2 Hand lever actuated
Type: S9 511.-1/2, S9 511RF.-1/2

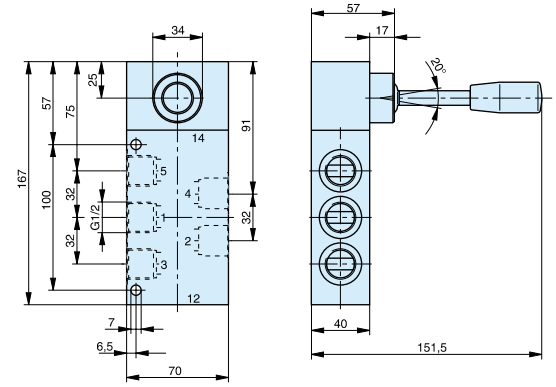

G1/2 Safety hand lever actuated
Type: S9 511S.-1/2

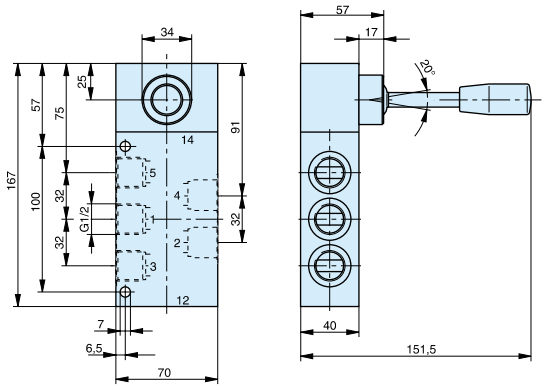

Tel: +45 63 12 83 00 | Email: ps@hymatik.com | www.hymatik.com | Hvidkaervej 27a, DK-5250 Odense SV, Denmark

G1/8 - 3/2 Way Valves

Pneumatically actuated
Type: S9 361-1/8, S9 361RF-1/8

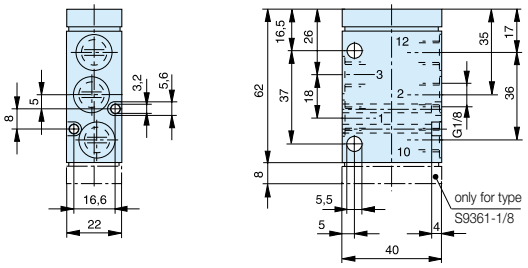

Electrically actuated
Type: S9 381(S)-1/8, S9 381(S)RF-1/8

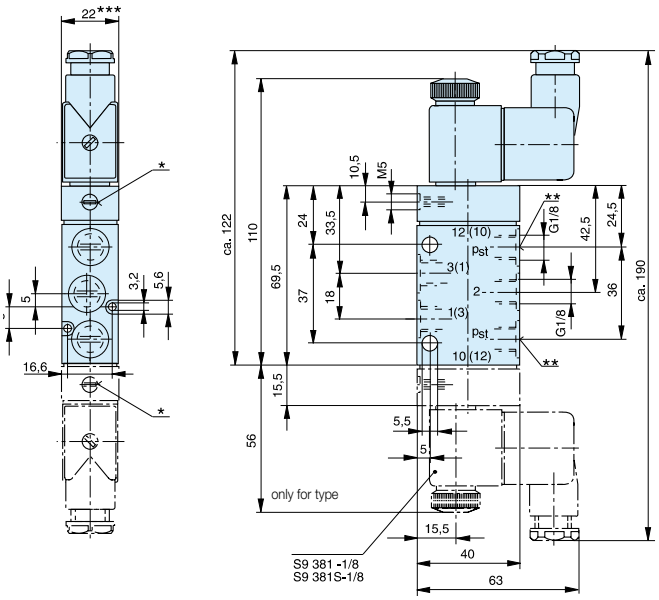

Solenoid for use in EX areas – Dimensions

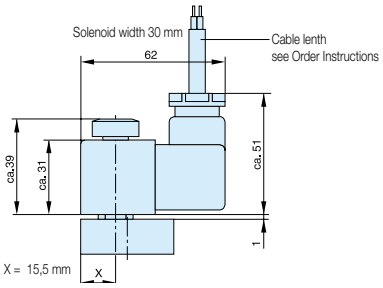

* Manual override
** Operating pressure supply p_{st} only for type S9 381S
*** Solenoid width = 30 mm on low wattage coil version

Dimensions in mm

Tel: +45 63 12 83 00 | Email: ps@hymatik.com | www.hymatik.com | Hvidkaervej 27a, DK-5250 Odense SV, Denmark

G1/8 - 3/2 Way Valves

Basic valve for panel mounting actuatos
Type: S9 390RF-1/8

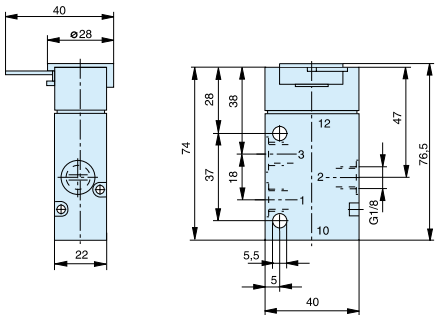

The actuators for these valves are interchangeable and can be mounted with 180° displacement on the basic valve.
The actuators are not mounted upon delivery.

Mounting diameter

Mounting diameter Ø22 mm

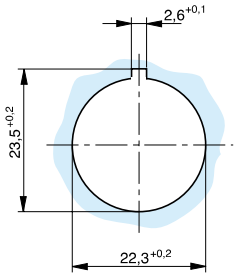

Mounting diameter Ø30 mm

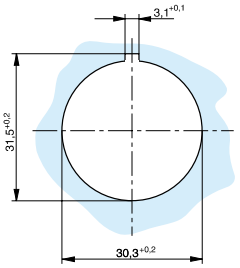

Rotary lever, indexed – Type: 12T-22, 12T-30,

Mounting diameter Ø22 mm

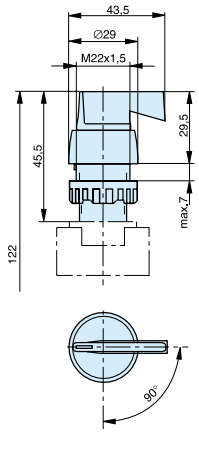

Mounting diameter Ø30 mm

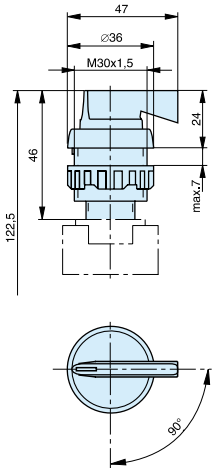

Pushbutton – Type: 13T-RF-22, 13T-RF-30

Mounting diameter Ø22 mm

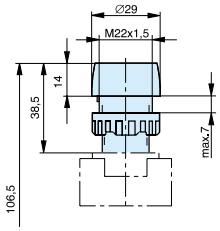

Mounting diameter Ø30 mm

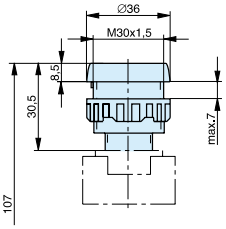

Dimensions in mm

Tel: +45 63 12 83 00 | Email: ps@hymatik.com | www.hymatik.com | Hvidkaervej 27a, DK-5250 Odense SV, Denmark

G1/8 - 3/2 Way Valves

Mushroom pushbutton
Type: 15T-RF-22, 15T-RF-30

Mounting diameter Ø22 mm

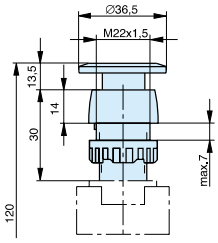

Mounting diameter Ø30 mm

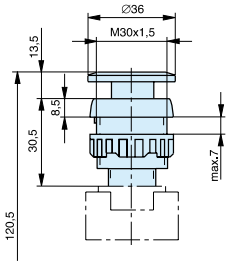

Locking switch
Type: 16T-22, 16T-30

Mounting diameter Ø22 mm

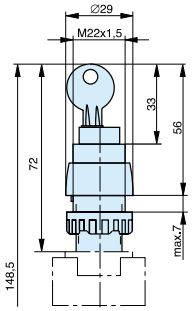

Mounting diameter Ø30 mm

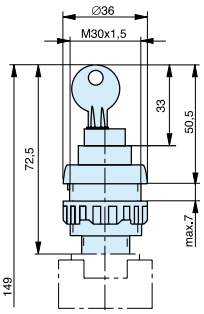

Rotary lever with spring return
Type: 12T-RF-22, 12T-RF-30

Mounting diameter Ø22 mm

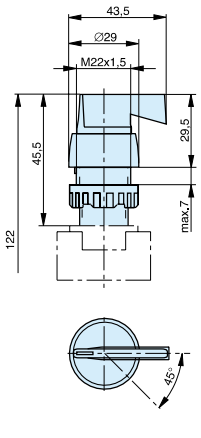

Mounting diameter Ø30 mm

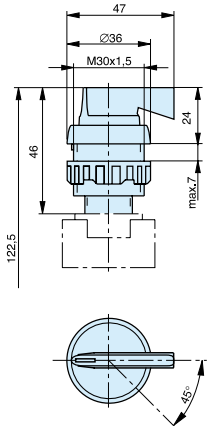

Mushroom pushbutton emergency-0ff
Type: 18T-22, 18T-30

Mounting diameter Ø22 mm

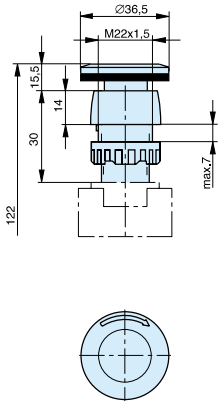

Mounting diameter Ø30 mm

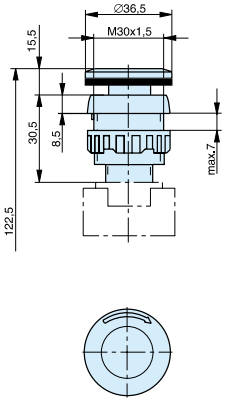

Rotary switch – Type: 17T-22, 17T-30

Mounting diameter Ø22 mm

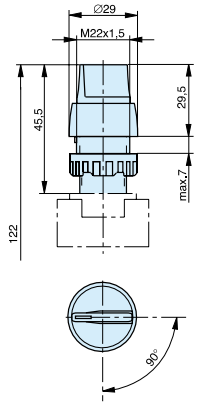

Mounting diameter Ø30 mm

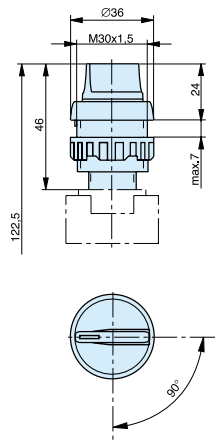

Dimensions in mm

Tel: +45 63 12 83 00 | Email: ps@hymatik.com | www.hymatik.com | Hvidkaervej 27a, DK-5250 Odense SV, Denmark

G1/4 - 3/2 Way Valves

Rotary lever actuated
Type: S9 312-1/4, S9 312RF-1/4

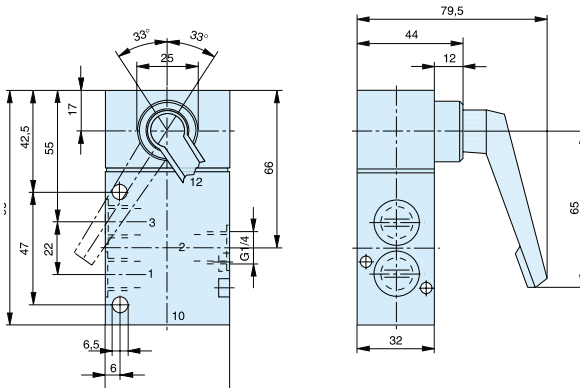

Electrically actuated
– Type: S9 381(S)-1/4, S9 382(S)-1/4, S9 381(S)RF-1/4

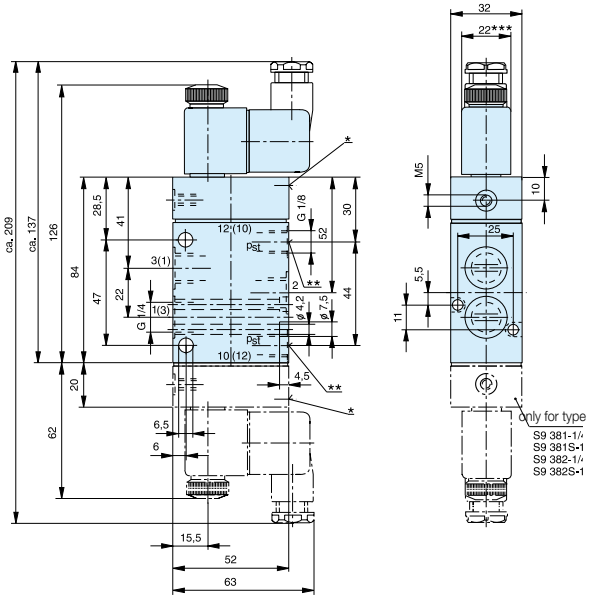

* Manual override
** Operating pressure supply p_{st} only for type S9 381S
*** Solenoid width = 30 mm
on low wattage coil version

Note:
The “normally open“ valve S9 381S-RF-1/4 cannot be used on a P-supply manifold.

Pneumatically actuated
Type: S9 361-1/4, S9 362-1/4, S9 361RF-1/4

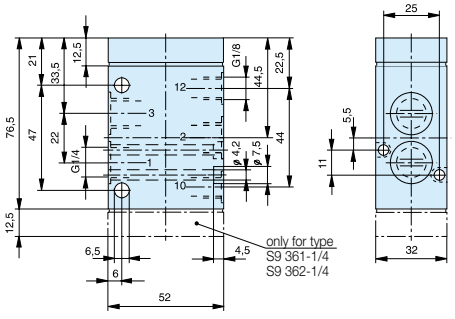

Solenoid for use in EX areas
Dimensions

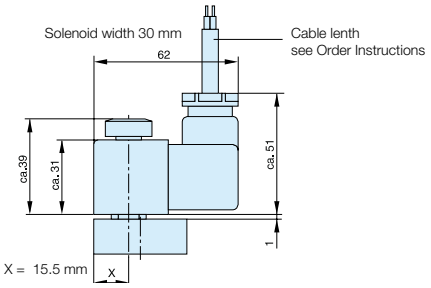

Dimensions in mm

Tel: +45 63 12 83 00 | Email: ps@hymatik.com | www.hymatik.com | Hvidkaervej 27a, DK-5250 Odense SV, Denmark

G1/2 - 3/2 Way Valves

Rotary lever actuated
Type: S9 312-1/2, S9 312RF-1/2

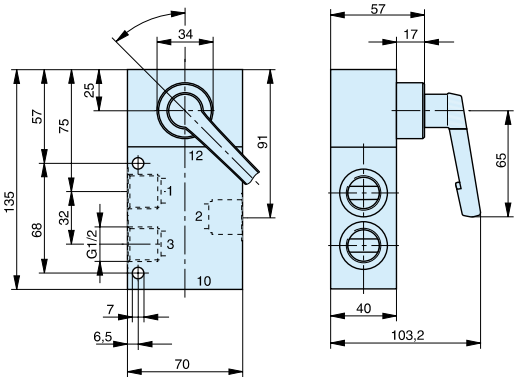

Electrically actuated
Type: S9 381(S)-1/2, S9 382(S)-1/2, S9 381(S)RF-1/2

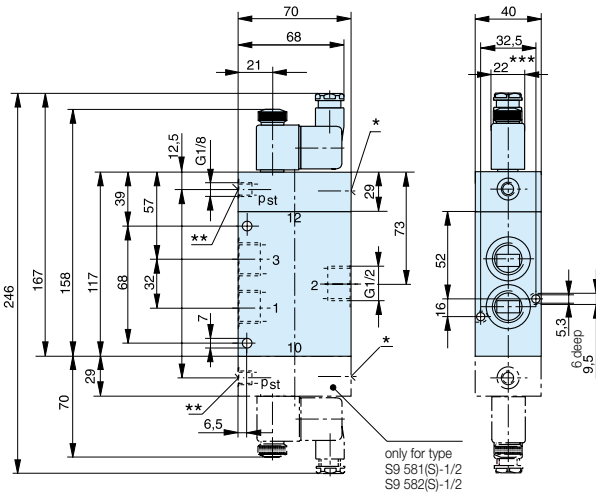

* Manual override
** Operating pressure supply p_{st} only for type S9 381S
*** Solenoid width = 30 mm on low wattage coil version

Note:
The “normally open“ valve S9 381S-RF-1/2 cannot be used on a P-supply manifold.

Pneumatically actuated
Type: S9 361-1/2, S9 361RF-1/2

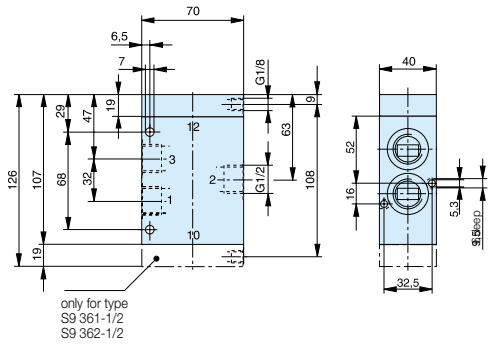

Solenoid for use in EX areas
Dimensions

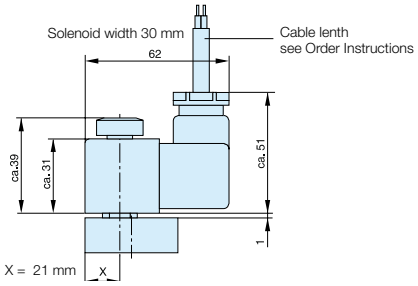

Dimensions in mm

Tel: +45 63 12 83 00 | Email: ps@hymatik.com | www.hymatik.com | Hvidkaervej 27a, DK-5250 Odense SV, Denmark

G1/8 - 5/2 Way Valves

Pneumatically actuated
Type: S9 561-1/8, S9 561RF-1/8

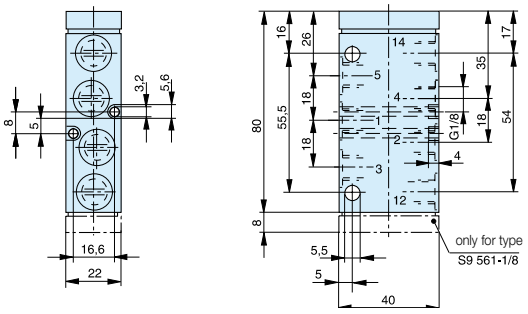

Electrically actuated
Type: S9 581(S)-1/8, S9 581(S)RF-1/8, S9 582-1/8

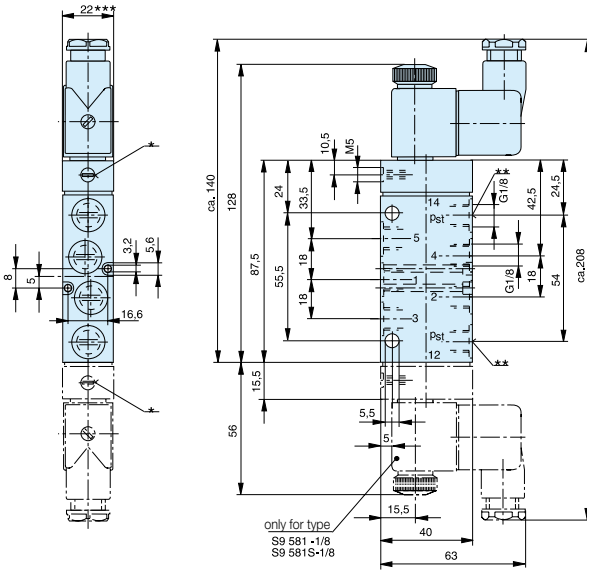

* Manual override
** Operating pressure supply p_{st} only for type S9 581S
*** Solenoid width = 30 mm on low wattage coil version

Solenoid for use in EX areas
Dimensions

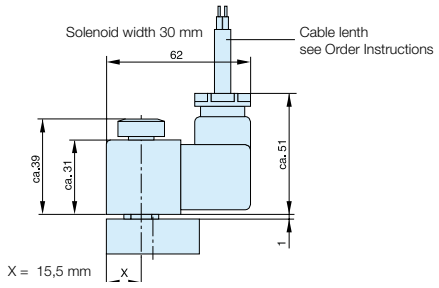

Dimensions in mm

Parker Hannifin Corporation
Pneumatic Division - Europe

Tel: +45 63 12 83 00 | Email: ps@hymatik.com | www.hymatik.com | Hvidkaervej 27a, DK-5250 Odense SV, Denmark

G1/8 - 5/2 Way Valves

Basic valve for panel mounting actuatos
Type: S9 590RF-1/8

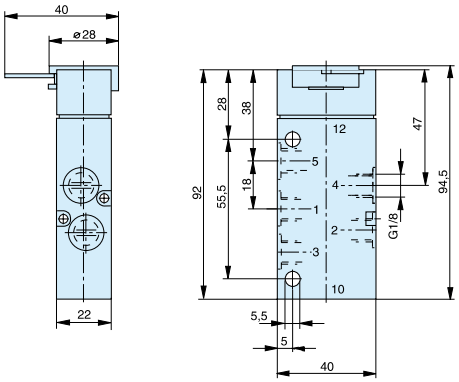

The actuators for these valves are interchangeable and can be mounted with 180° displacement on the basic valve.
The actuators are not mounted upon delivery.

Mounting diameter

Mounting diameter Ø22 mm **Mounting diameter Ø30 mm**

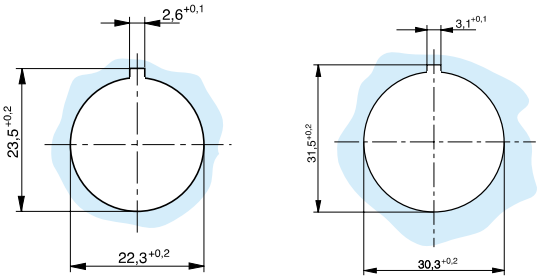

Rotary lever, indexed
Type: 12T-22, 12T-30

Mounting diameter Ø22 mm **Mounting diameter Ø30 mm**

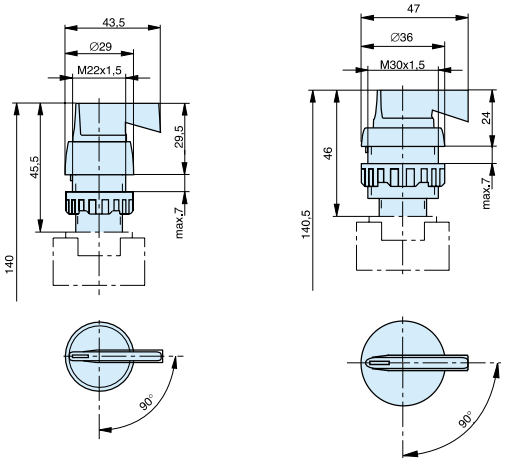

Mushroom pushbutton
Type: 15T-RF-22, 15T-RF-30

Mounting diameter Ø22 mm **Mounting diameter Ø30 mm**

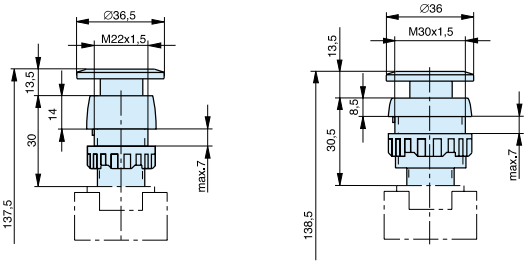

Pushbutton – Type: 13T-RF-22, 13T-RF-30

Mounting diameter Ø22 mm **Mounting diameter Ø30 mm**

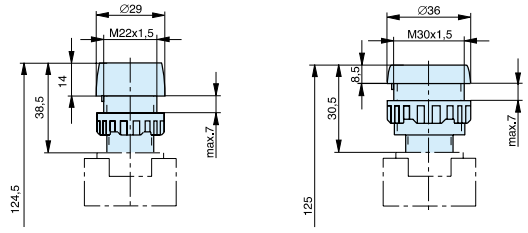

Dimensions in mm

Tel: +45 63 12 83 00 | Email: ps@hymatik.com | www.hymatik.com | Hvidkaervej 27a, DK-5250 Odense SV, Denmark

G1/8 - 5/2 Way Valves

Rotary switch
Type: 17T-22, 17T-30

Mounting diameter Ø22 mm

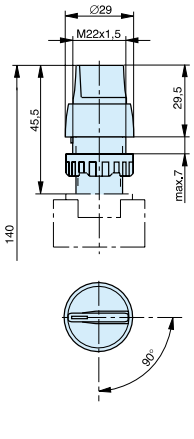

Mounting diameter Ø30 mm

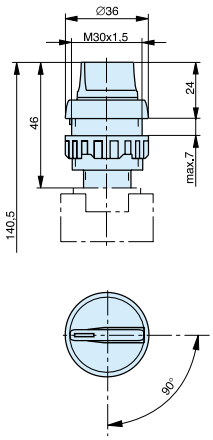

Rotary lever with spring return
Type: 12T-RF-22, 12T-RF-30

Mounting diameter Ø22 mm

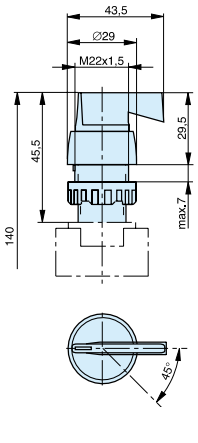

Mounting diameter Ø30 mm

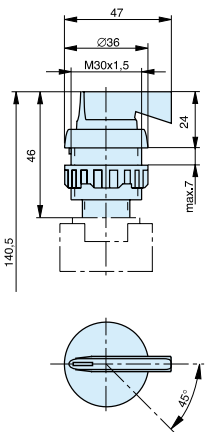

Mushroom pushbutton emergency-0ff
Type: 18T-22, 18T-30

Mounting diameter Ø22 mm

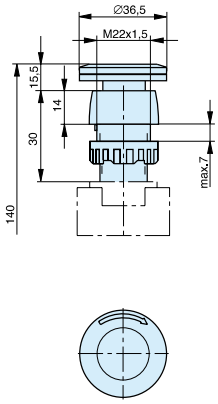

Mounting diameter Ø30 mm

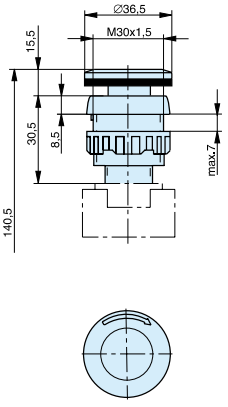

Locking switch
Type: 16T-22, 16T-30

Mounting diameter Ø22 mm

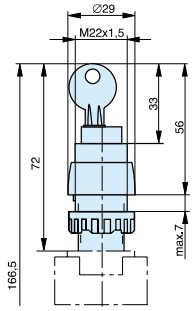

Mounting diameter Ø30 mm

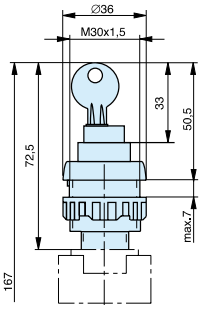

Dimensions in mm

Parker Hannifin Corporation
Pneumatic Division - Europe

Tel: +45 63 12 83 00 | Email: ps@hymatik.com | www.hymatik.com | Hvidkaervej 27a, DK-5250 Odense SV, Denmark

G1/4 - 5/2 Way Valves

Rotary lever actuated
Type: S9 512-1/4, S9 512RF-1/4

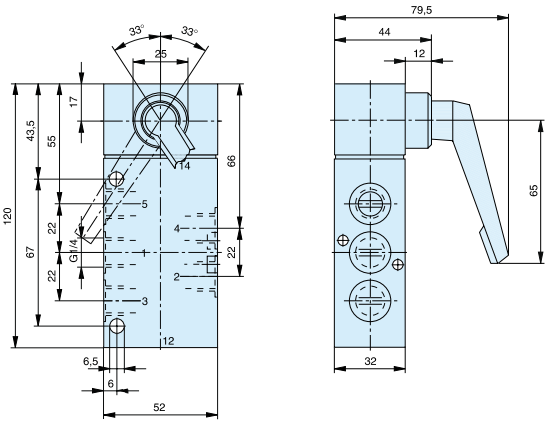

Electrically actuated
Type: S9 581(S)-1/4, S9 582(S)-1/4, S9 581(S)RF-1/4

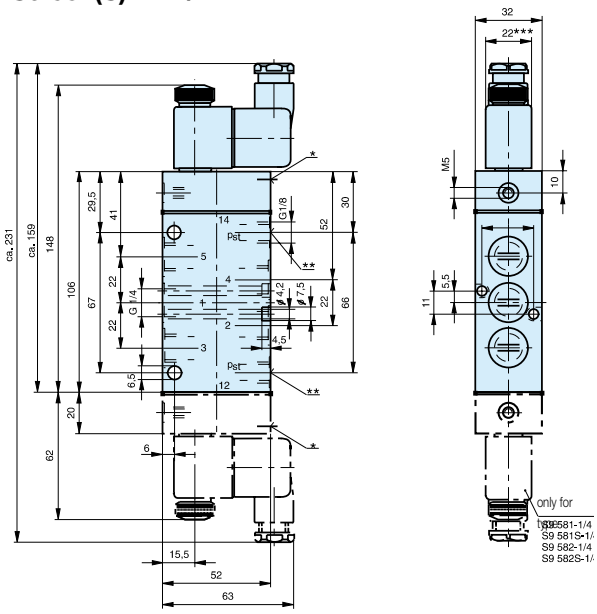

* Manual override
** Operating pressure supply p_{st} only for type S9 581S
*** Solenoid width = 30 mm on low wattage coil version

Pneumatically actuated
Type: S9 561-1/4, S9 562-1/4, S9 561RF-1/4

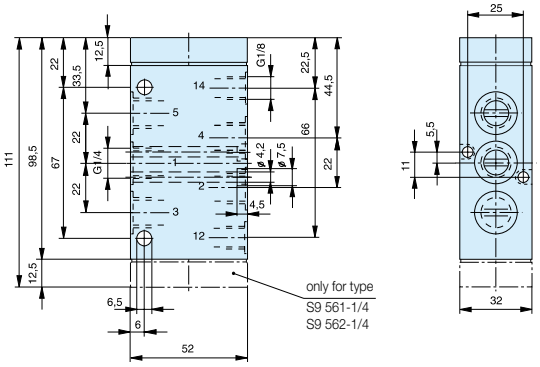

Solenoid for use in EX areas
Dimensions

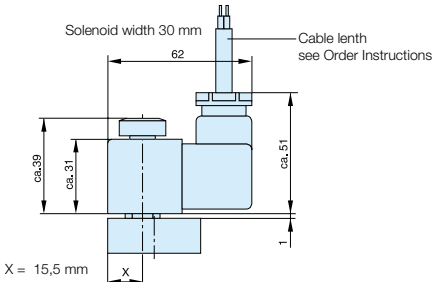

Dimensions in mm

Tel: +45 63 12 83 00 | Email: ps@hymatik.com | www.hymatik.com | Hvidkaervej 27a, DK-5250 Odense SV, Denmark

G1/2 - 5/2 Way Valves

Rotary lever actuated
Type: S9 512-1/2, S9 512RF-1/2

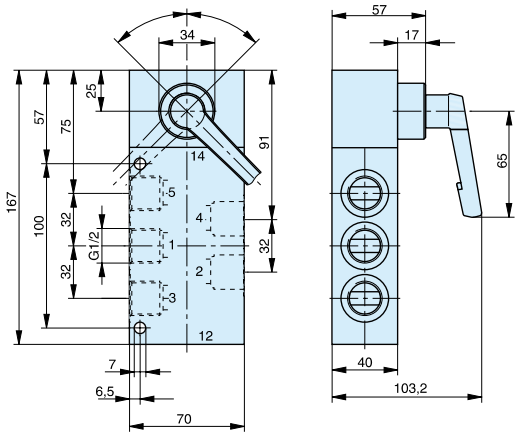

Electrically actuated
Type: S9 581(S)-1/2, S9 582-1/2, S9 581(S)RF-1/2

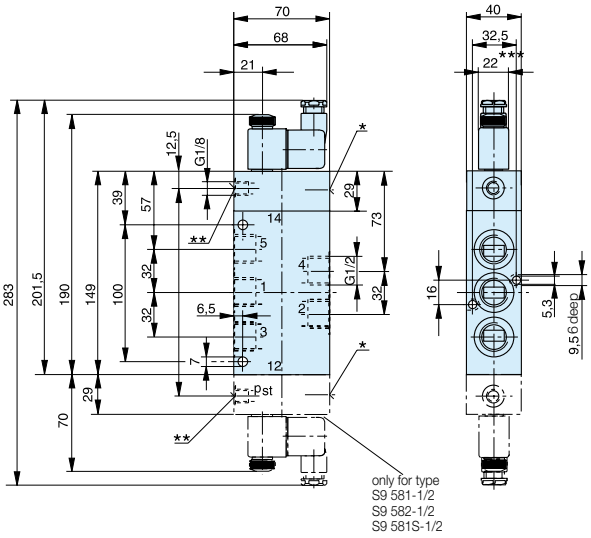

* Manual override
** Operating pressure supply p_{st} only for type S9 581S
*** Solenoid width is 30 mm on low wattage coil version

Pneumatically actuated
Type: S9 561-1/2, S9 561RF-1/2, S9 562-1/2

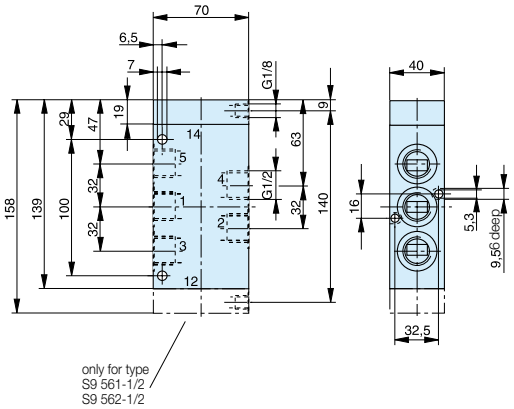

Solenoid for use in EX areas
Dimensions

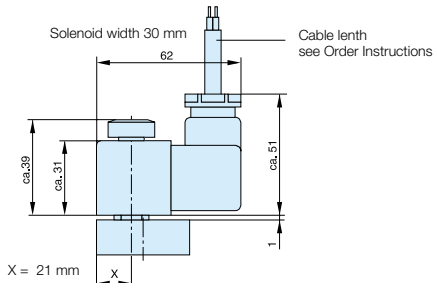

Dimensions in mm

Tel: +45 63 12 83 00 | Email: ps@hymatik.com | www.hymatik.com | Hvidkaervej 27a, DK-5250 Odense SV, Denmark

G1/8 - 5/3 Way Valves

Pneumatically actuated
Type: S9 561RF.-1/8

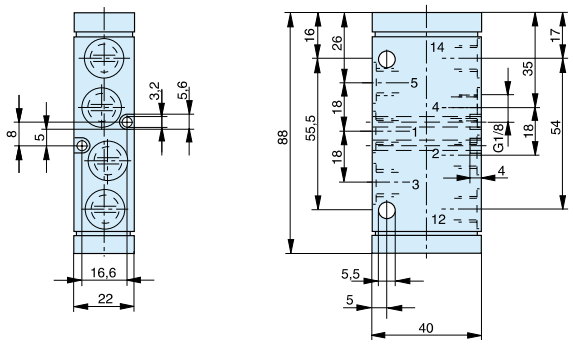

Electrically actuated
Type: S9 581(S-)RF.-1/8

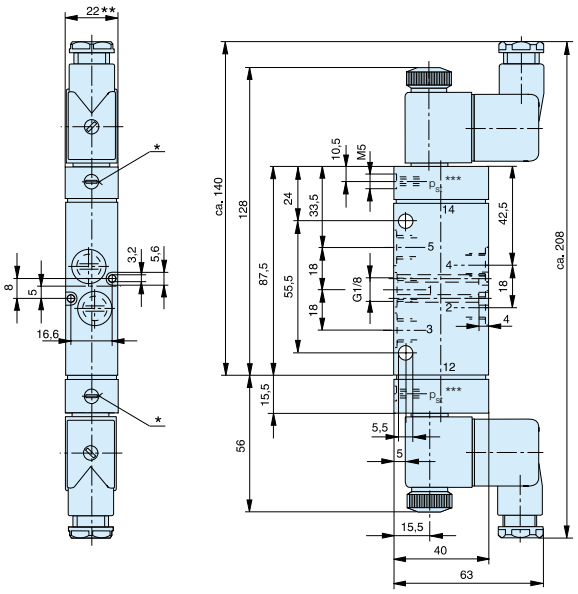

Solenoid for use in EX areas
Dimensions

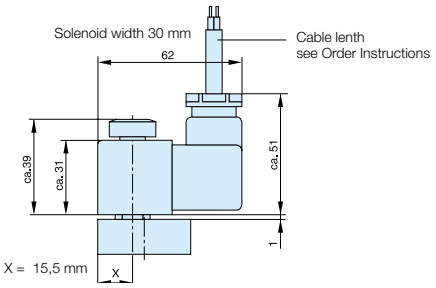

* Manual override
** Solenoid width = 30 mm on low wattage coil version
*** Operating pressure supply p_{st} only for type S9 581S

Dimensions in mm

Tel: +45 63 12 83 00 | Email: ps@hymatik.com | www.hymatik.com | Hvidkaervej 27a, DK-5250 Odense SV, Denmark

G1/4 - 5/3 Way Valves

Rotary lever actuated
Type: S9 512.-1/4, S9 512RF.-1/4

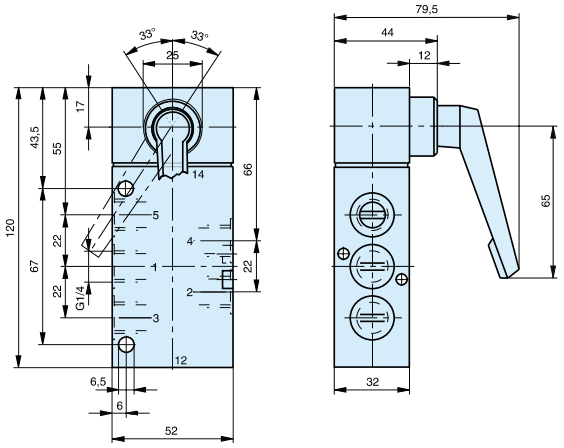

Electrically actuated
Type: S9 581RF.-1/4

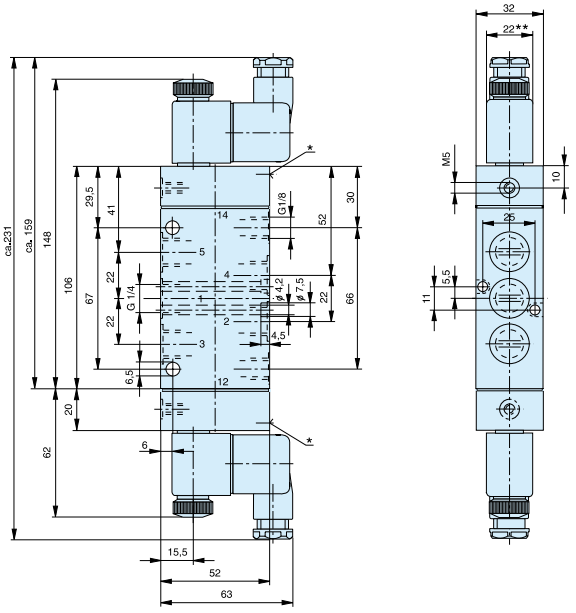

* Manual override
** Solenoid width is 30 mm on low wattage coil version

Pneumatically actuated
Type: S9 561RF.-1/4

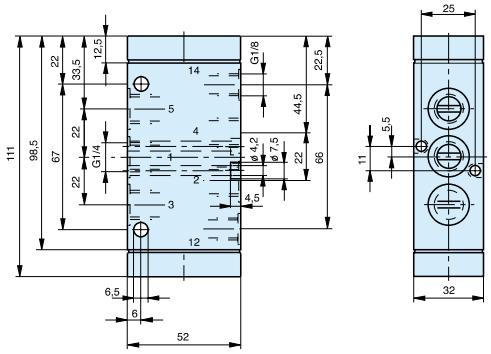

Solenoid for use in EX areas
Dimensions

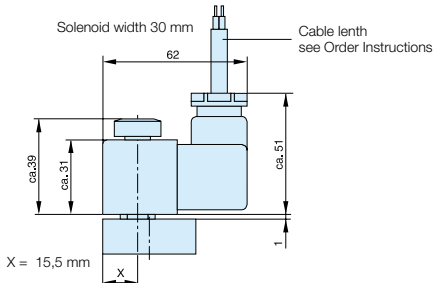

Dimensions in mm

Tel: +45 63 12 83 00 | Email: ps@hymatik.com | www.hymatik.com | Hvidkaervej 27a, DK-5250 Odense SV, Denmark

G1/2 - 5/3 Way Valves

Rotary lever actuated
Type: S9 512.-1/2, S9 512RF.-1/2

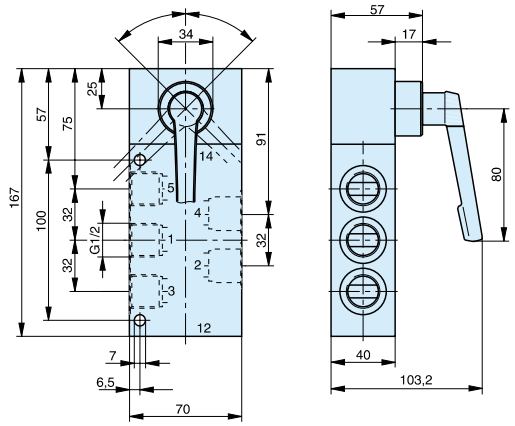

Electrically actuated
Type: S9 581RF.-1/2

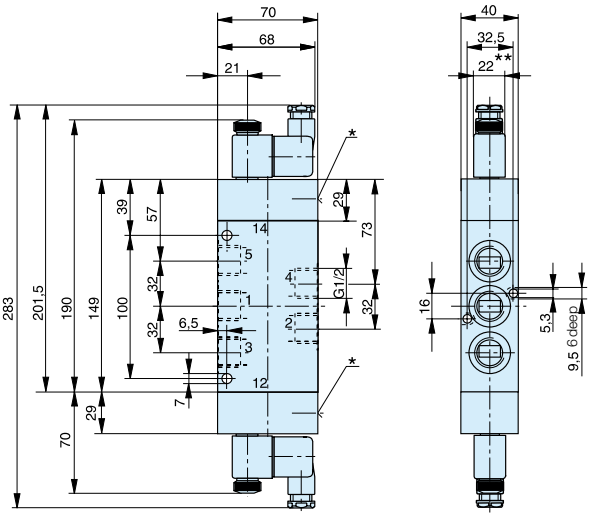

* Manual override
** Solenoid width is 30 mm on low wattage coil version

Pneumatically actuated
Type: S9 561RF.-1/2

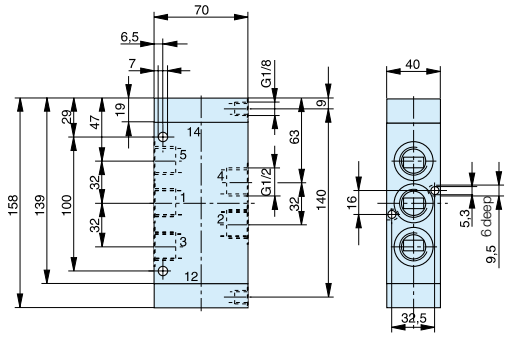

Solenoid for use in EX areas
Dimensions

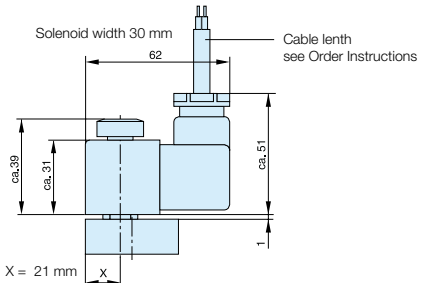

Dimensions in mm

Tel: +45 63 12 83 00 | Email: ps@hymatik.com | www.hymatik.com | Hvidkaervej 27a, DK-5250 Odense SV, Denmark

5/2-Way Oscillating Valves

The oscillating valve generates oscillating movements such as e.g. shaking, hammering, plunging, feed motions etc.

Function:
If compressed air is intro-ducesed into inlet port 1, the outlet ports 4 and 2 are alternately supplied with compressed air.

The speed of the operated cylinder and also the stroke frequency are adjusted with two exhaust air throttles.



Operating information

Type	Spool valve	Lubrication *	None or oil mist lubrication
Mounting	2 Screws M6 (M4)	Pneumatic Characteristics	
Tube connection	Thread	Nominal pressure	6 bar
Connection size	G1/4, 11 deep	Operating pressure range	3 – 8 bar
Weight (mass)	0.65 kg	Nominal flow	1300 l/min
Installation	In any position	Actuation	
Ambient temperature range **	-10 °C to +60 °C	Pneumatic	Direct
Medium temperature range **	-10 °C to +60 °C	Actuation pressure range	3 – 8 bar
Medium	Filtered and oiled or filtered, unoiled compressed air		

* We recommend the use of mineral oil type VG 32 to ISO 3448
** Note: Please consult us for operating temperatures below 0° C

Symbol	Type	Order Code
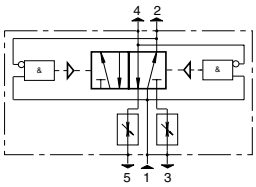	S9 568/68-1/4-SO	**PD 34796**

Pneumatic oscillating – Type: S9 568/68-1/4-SO

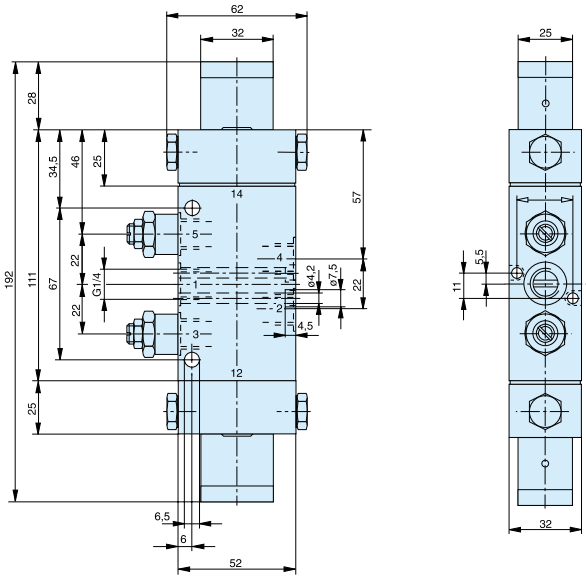

Dimensions in mm

Parker Hannifin Corporation
Pneumatic Division - Europe

Tel: +45 63 12 83 00 | Email: ps@hymatik.com | www.hymatik.com | Hvidkaervej 27a, DK-5250 Odense SV, Denmark

3/2-Way Screw-In Valve Series EV



Operating information

Actuation	Electrical directly operated
Type	Poppet valve, normally closed
Mounting	Screws into thread G1/8
Tube connection	Thread
Port size	Port 1: M5, port 2: G1/8
Weight	0.1 kg
Nominal diameter	1 mm
Installation	in any position
Ambient temperature range	-10 °C to +60 °C
Medium temperature range	-10 °C to +60 °C
	Note : Please consult us for operating temperatures below 0° C
Medium	Filtered compressed air (30µ)
Lubrication	With or without oil mist lubrication (We recommend the use of mineral oil type VG 32 to ISO 3448)

Pneumatic Characteristics

Nominal pressure	6 bar
Operating pressure range	0 – 10 bar
Nominal flow	30 l/min

Actuation

Electrical	Direct	
Voltage type	Alternating current (50/60Hz)	Direct current
Nominal voltage [1]		
– Standard version **	230 ±10%	24 ±10%
– Low wattage version	230 ±10%	24 ±10%
Initial power consumption		
– Standard version (VA)	11	4.8
– Low wattage version (VA)	7.8	2.7
Continuous consumption		
– Standard version (VA)	8.5	4.8
– Low wattage version (VA)	4.9	2.7
Duty cycle	100%	
Electrical protection	IP 65 to DIN 40050 (applise only to solenoid with plug)	
Connection	Plug to DIN EN 175301-803 form B – industrial standard, Low wattage version form A	

([1] see Order Instructions
** other voltages on request

Order Instructions – 3/2 Way Screw-In Valve – Series EV

Actuation	Symbol	Order Instructions	
		Type	**Order code**
Electrical, by permanent signal	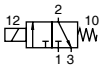	EV 381RF-M5-..	**PD25076-..33**

Solenoid version	Nominal voltage	Key code
Cast encapsulated housing	24V =	02
	230V 50/60Hz	61
	Other voltages on request	

3/2 Way Valve – Type: EV 381RF-M5

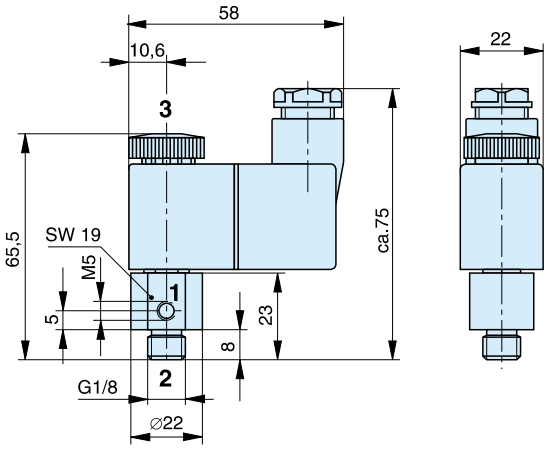

Dimensions in mm

Parker Hannifin Corporation
Pneumatic Division - Europe

Tel: +45 63 12 83 00 | Email: ps@hymatik.com | www.hymatik.com | Hvidkaervej 27a, DK-5250 Odense SV, Denmark

3/2-Way Valve Series V9

NW 1.3 and 2.5



Actuation System:

- Electrically actuated, directly actuated

Versions:

Threaded version

- Normally closed
- Normally open
- With manual override

Operating information

Type	Poppet valve		
Mounting	2 Screws M3 (NW 2.5: 2 x M4)		
Tube connection	Thread		
Thread	G1/8 – 8 deep		
Weight	NW 1.3: 0.140 kg NW 2.5: 0.320 kg		
Installation	In any position		
Ambient temperature range (1	-10 °C to +60 °C	Note : Please consult us for operating temperatures below 0° C	
Medium temperature range (1	-10 °C to +70 °C		
Medium	Filtered compressed air		
Lubrication	With or without oil mist lubrication (We recommend the use of mineral oil type VG 32 to ISO 3448)		
Pneumatic Characteristics			
Nominal pressure	6 bar		
Operating pressure range	NW 1.3: 0–10 bar NW 2.5: 0-7 bar		
Nominal flow	NW 1.3: 37 l/min NW 2.5: 150 l/min		
Actuation			
Electrical	Direct		
Voltage type	Alternating current (50/60Hz)	Direct current	
Nominal voltage			
– Standard version	230 V ±10%	24 V ±10%	other voltages on request
– Low wattage version	230 V ±10% (not for V9-NW 2.5)	24 V ±10% (not for V9-NW 2.5)	
Initial power consumption			
– Standard version	NW 1.3: 11 VA NW 2.5: 11.5 VA	NW 1.3: 4.8 VA NW 2.5: 10 VA	
– Low wattage version	7.8 VA	2.7 VA	
Continuous consumption			
– Standard version	NW 1.3: 8.5 VA NW 2.5: 7.5 VA	NW 1.3: 4.8 VA NW 2.5: 7.5 VA	
– Low wattage version	4.9 VA	2.7 VA	
Duty cycle	100%		
Electrical protection	IP 65 to DIN 40050 (applise only to solenoid with connector)		
Connection	NW 1.3: connector to DIN EN 175301-803 form B – industrial standard NW 2.5: connector to DIN EN 175301-803 form A – industrial standard		

Parker Hannifin Corporation
Pneumatic Division - Europe

Tel: +45 63 12 83 00 | Email: ps@hymatik.com | www.hymatik.com | Hvidkaervej 27a, DK-5250 Odense SV, Denmark

Type: V9 381RF-1/8NG (NO[1])– NW 1.3
Type: V9 381H-RF-1/8NG (NO[1])– NW 1.3

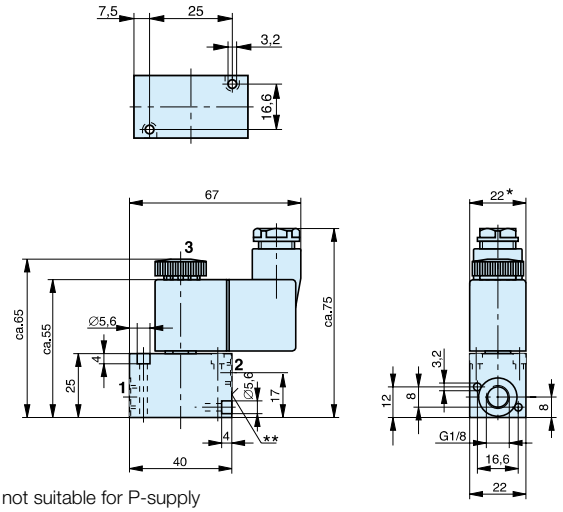

[1] not suitable for P-supply manifold mounting

Type: V9 381RF-1/8NG – NW 2.5
Type: V9 381H-RF-1/8NG – NW 2.5

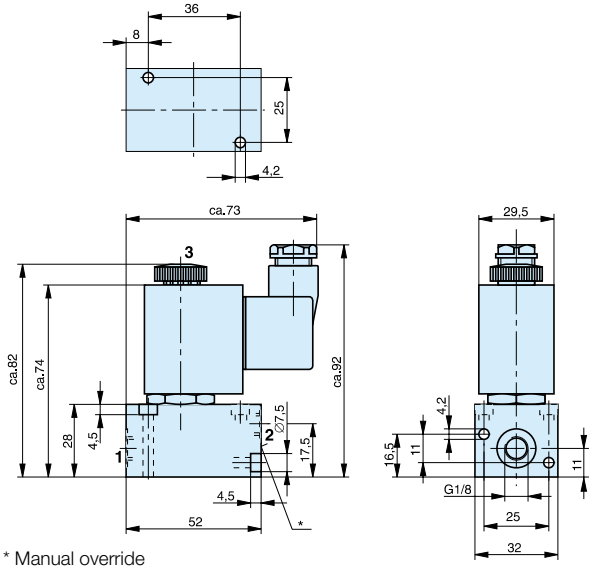

* Manual override

Dimensions in mm

Order Instructions – 3/2 Way Valves – Series V9

Actuation System	Symbol	Nominal Size (mm)	Order Instructions Type	**Order code**
Electrical, by permanent signal	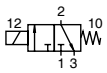	NW 1.3	V9 381RF-1/8-NC-..	**PA 10362-..33**
		NW 2.5	V9 381RF-1/8-NC-..	**PA 10369-..33**
	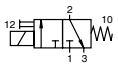	NW 1.3	V9 381H-RF-1/8-NC-..	**PA 10363-..33**
		NW 2.5	V9 381H-RF-1/8-NC-..	**PA 10370-..33**
	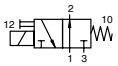	NW 1.3	V9 381H-RF-1/8-NO-..	**PA 10367-..33**

Solenoid version	Nominal voltage	Applicable for	Key code
Standard version	230V 50/60Hz	110 V =	61
	24V =	48V 50/60Hz	02
Low wattage version	24V =		13
	230V 50/60Hz		69

Other voltages on request

Order Instructions – Accessories for P-Supply Manifold Mounting

Description	for NW	Order No.
P-Manifold PL-1/8-..	1.3	PD32763-....*
P-Manifold PLK-1/8-..	1.3	PD37174-....*
P-Manifold PL-1/4-..	2.5	PD32765-....*
P-Manifold PLK-1/4-..	2.5	PD32175-....*

* Complete order no. with no. of valve

The delivery includes:
P-Manifold complete incl. mounting kit

Parker Hannifin Corporation
Pneumatic Division - Europe

Tel: +45 63 12 83 00 | Email: ps@hymatik.com | www.hymatik.com | Hvidkaervej 27a, DK-5250 Odense SV, Denmark

Notes

Tel: +45 63 12 83 00 | Email: ps@hymatik.com | www.hymatik.com | Hvidkaervej 27a, DK-5250 Odense SV, Denmark

Notes

Tel: +45 63 12 83 00 | Email: ps@hymatik.com | www.hymatik.com | Hvidkaervej 27a, DK-5250 Odense SV, Denmark











Air Preparation & Airline Accessories









Parker Global Air Preparation System

Global.
Economical.
Modular.



Performance you need,
wherever *you need it.*

The comprehensive Global Air Preparation System is available in three body sizes with either BSPP or NPT to accommodate thread type requirements.

Full featured filters, regulators, filter/regulators, and lubricators are available with a wide range of standard options to meet air preparation needs.

Individual units can easily be assembled into various combinations, utilizing patented modular lightweight body connectors.

www.parker.com/globalfrl

Validated for transport applications

As you would expect from a member of the Rail Industry Association, the Global FRL meets the test specification standards enabling the Global FRL to be used as a validated product in a variety of rail applications.

RAILWAY INDUSTRY ASSOCIATION

CEI/ICE 61373 1999-1 Category 2 (BS EN 61373:1999)



Tel: +45 63 12 83 00 | Email: ps@hymatik.com | www.hymatik.com | Hvidkaervej 27a, DK-5250 Odense SV, Denmark

Application Guide

FRL to Valve: The chart below contains recommendations for the correct selection of Global Air Preparation units to suit the number and size of valves in a typical application.

	P31 Mini Series	P32 Compact Series	P33 Standard Series
			

	Number of valves that would actuate at once															
	1	2	3	4	5	6	7	8	9	10	11	12	13	14	15	16
Moduflex 1																
Isys Micro																
HB / Viking Xtreme																
Moduflex 2																
HA / Global ISO																
							See Larger Parker FRL Offering									

Actuator to FRL: The chart below contains recommendations for the correct selection of Global Air Preparation units suitable for each cylinder size. If you have a tube length over 2 m, choose one tube size larger than the chart. The table is based on a Maximum cylinder speed of 0.5m/s

Cyl Ø mm Cyl Ø inches		Cylinder bore size													
		5 (5/16)	10 (7/16)	16 (9/16)	20 (3/4)	25 (1)	28 (1-1/8)	32 (1-1/4)	40 (1-1/2)	45 (1-3/4)	50 (2)	63 (2-1/2)	75 (3)	80 (3-1/4)	100 (4)
Tube Ø mm Tube Ø inches		Tube diameter external													
		4 (5/32)	4 (5/32)	4 (5/32)	6 (1/4)	6 (1/4)	6 (1/4)	6 (1/4)	8 (5/16)	8 (5/16)	8 (5/16)	10 (3/8)	10 (3/8)	12 (1/2)	12 (1/2)
Number of cylinders actuating at once	1														
	2														
	3														
	4														
	5														
	6														
	7														
	8														
	9														
	10														
		P31 Mini Series					P32 Compact Series			P33 Standard Series			See Larger Parker FRL Offering		
															

Note: Data listed above is simply a guideline for a typical application only. Proper sizing and correct flow requirements must be taken into account.

Parker Hannifin Corporation
Pneumatic Division - Europe

Tel: +45 63 12 83 00 | Email: ps@hymatik.com | www.hymatik.com | Hvidkaervej 27a, DK-5250 Odense SV, Denmark

Together we can power your application with clean, dry air

Fast cycle times, high product quality, and low downtime all require a clean, dry pneumatic system to function properly. Parker has what it takes to make sure pneumatic systems perform at their best.

Clean, dry pneumatic systems with Parker Global Air Preparation

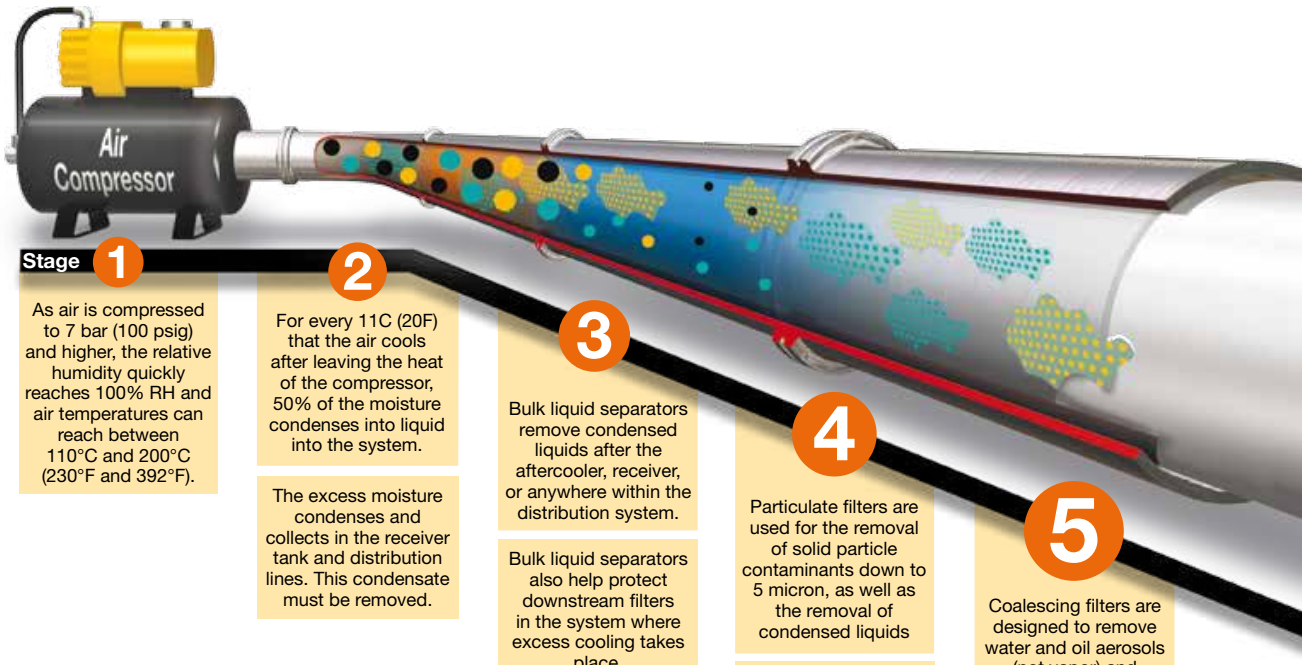

Stage 1

As air is compressed to 7 bar (100 psig) and higher, the relative humidity quickly reaches 100% RH and air temperatures can reach between 110°C and 200°C (230°F and 392°F).

2

For every 11C (20F) that the air cools after leaving the heat of the compressor, 50% of the moisture condenses into liquid into the system.

The excess moisture condenses and collects in the receiver tank and distribution lines. This condensate must be removed.

3

Bulk liquid separators remove condensed liquids after the aftercooler, receiver, or anywhere within the distribution system.

Bulk liquid separators also help protect downstream filters in the system where excess cooling takes place.

4

Particulate filters are used for the removal of solid particle contaminants down to 5 micron, as well as the removal of condensed liquids

Note: Water and oil, in vapor form, pass through general purpose particulate filters.

This type of filter should be used as a prefilter for the coalescing (oil removal) filter.

5

Coalescing filters are designed to remove water and oil aerosols (not vapor) and particulate from air streams down to 0.01 micron in size.

Installed in pairs, Particulate and Coalescing filters ensure a continuous supply of high quality air.

Key

- **Particulate**
- **Oil**
- **Water**
- **Oil Vapor**
- **Water Vapor**

Tel: +45 63 12 83 00 | Email: ps@hymatik.com | www.hymatik.com | Hvidkaervej 27a, DK-5250 Odense SV, Denmark

						
Stages	1 2	3	4	5	6	7
Function	**Air Compressor**	**Bulk Liquid Removal**	**Particulate Filtration**	**Coalescing Filtration**	**Air Dryers**	**Hydrocarbon Removal**
Application	All pneumatic systems	Basic pneumatic systems	Basic pneumatic systems	Systems requiring highest quality air.	Systems requiring air with reduced moisture content	Systems requiring highest quality air for critical applications
Description	Air leaving the compressor room at 93ºC (200ºF) releases 95% of its moisture into the piping system when it cools to 38ºC (100ºF)	Removes bulk liquid contamination and protects filters where excess cooling takes place in the distribution piping	Removes solid particulates down to 5 micron, and the separation of bulk contaminants.	Removes liquid aerosols and submicron particulates (not vapor) down to 0.01 micron.	Removes water vapor from air stream. Dew point reduced down to -40'C membrane and -70'C desiccant.	Removal of odors and trace vapors for critical applications.
Parker Global Air Preparation Solution	Customer supplied	P3TF Bulk Liquid Separator	P31, P32, P33 Particulate Filter	P31, P32, P33 Coalescing Filter	P3XJ Membrane Dryer P3TJ Regenerative Desiccant Dryer	P31, P32, P33 Activated Carbon (Adsorber) Filter



DECLARATION

We **Parker Hannifin Manufacturing Austria GmbH**
Badener Straße 12
2700 Wiener Neustadt
Austria

Product	Series	Category
Filter*	P31FB, P32FB, P33FA	for zone 1, 21
Regulator	P31RB, P32RB, P33RA	for zone 1, 21
Filter regulator*	P31EB, P32EB, P33EA	for zone 1, 21
Lubricator*	P31LB, P32LB, P33LA	for zone 1, 21
Ball Valve & Slide Valve	P31VB, P32VB, P33VB	for zone 1, 21
Manifold	P31MA, P32MA, P33MA	for zone 1, 21
For non-fitted solenoid product		
Soft start & Dump Valve	P31TA, P32TA	for zone 1, 21
Soft Start Valve	P31SA, P32SA	for zone 1, 21
Dump Valve	P31DA, P32DA	for zone 1, 21

*Filter, Filter Regulator and Lubricator – This evaluation applies to products fitted with metal bowls only.

Following Ignition Hazard Assessments performed on the non-electrical products listed above, in accordance with the requirements of EN 13463-1:2009, it was considered that the equipment does not contain its own source of ignition, and therefore is not within the scope of directive 94/9/EC.

The products can be used in a Group II Category 2 environment assuming that the ATEX Directive and the following conditions are complied with:

- Installation and maintenance of the product must be undertaken by qualified personnel.
- Do not mount the products in an area where impact may occur.
- Filters must be used to limit the introduction of particles and to capture particles generated in service.
- Supply air quality must be within ISO 8573-1:2010 Class 1.4.2.
- Maximum working temperature to be as stated on product label.
- WARNING – pulsating pressure and/or a closed circuit can generate heat.
- Deposits of dust on the product must not exceed 5mm thickness.
  Refer to technical file for surface areas of plastics.
  The unit must be earthed via the compressed air supply line.
- The unit must not come into contact with liquid solvents, acids or alkalis
  Refer to technical file for chemicals known to be incompatible.
  Product cleaning must be undertaken using a method complying with the specifications of the ATEX zone, preferably by using mild soap and water or antistatic products.
- **Regulators, Filter Regulators:**
  Do not use Regulators or Filter Regulators within systems that can create vibration within the Regulator/Filter Regulator unit.
- **Solenoid Operated Valves:**
  Are suitable for use in an ATEX environment, (Group II Category 2) providing ATEX approved solenoids are fitted.
- Technical file available on request.

Approved by:

Engineering Manager – Air Preparation EMEA

Validated for transport applications



As you would expect from a member of the Rail Industry Association, Global air preparation meets the test specification standards enabling the Global series to be used as a validated product in a variety of rail applications.

Railway Industry Association

CEI/ICE 61373 1999-1 Category 2 (BS EN 61373:1999)

Position of T-Brackets for multiple units

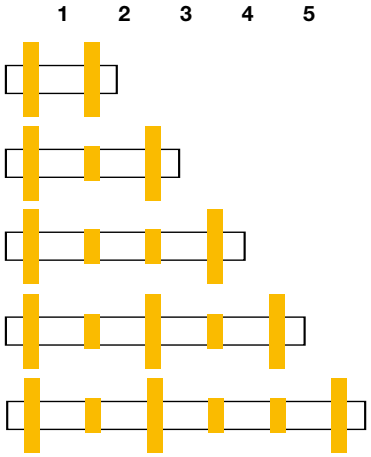

Recommended mounting / fixation method for use in transportation applications.

- The use of a port block kit and T-bracket should be used at all times (angle / L-brackets should not be used in rail applications)
- Additional security is recomended with the use of 'vibration proof adhesive' on the wall mounting screws to the port / connector block
- Inlet (P1) and Outlet (P2) ports should always have a T-Bracket fixation to eliminate product canterlever stress
- 'L' brackets should not be used in the use for rail service







For illustration purposes only

- High flow modular air-preparation series
- Space saving integral gauge (P31 size only)
- Manifold style regulators available
- OSHA compliant shut-off valves

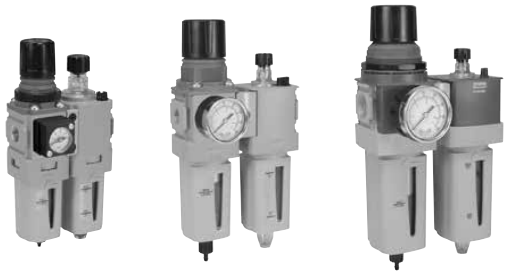

Operating information

Working pressure :
- Plastic bowl: 10 bar max
- Metal bowl: 17 bar max

Working temperature :
- * Plastic bowl: -10°C to +52°C
- * Metal bowl: -10°C to +65.5°C

* Refer to Technical Catalogue for individual unit temperatures

Flow characteristics

40mm body width 1/4" Ported		60mm body width 1/4", 3/8", & 1/2" Ported		73mm body width 1/2" & 3/4" Ported	
Flow	**dm³/s**	**Flow**	**dm³/s**	**Flow**	**dm³/s**
Filter	12	Filter	39	Filter	40
Coalescing Filter	3,6	Coalescing Filter	17	Coalescing Filter	34
Regulator	32	Regulator	78	Regulator	111
Filter Regulator	35	Filter Regulator	64	Filter Regulator	108
Lubricator	19	Lubricator	42	Lubricator	71

Popular Combinations - P31 Series



Filter + Regulator + Lubricator Combinations + Poly bowl
5 micron element, 8 bar Regulator + Gauge and Wall Mounting Brackets
Inlet pressure 10 bar, Secondary pressure 6.3 bar, 1 bar pressure drop.

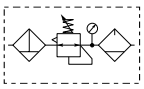

Port size	Flow dm³/s	Flow (scfm)	Manual Drain	Weight	Pulse Drain	Weight
1/4"	13	27	**P31CB12GEMNTLNW**	0.46 kg	**P31CB12GEBNTLNW**	0.46 kg



Filter/Regulator + Lubricator Combinations + Poly bowl
5 micron element, 8 bar Regulator + Gauge and Wall Mounting Brackets
Inlet pressure 10 bar, Secondary pressure 6.3 bar, 1 bar pressure drop.

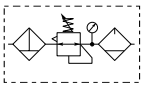

Port size	Flow dm³/s	Flow (scfm)	Manual Drain	Weight	Pulse Drain	Weight
1/4"	14	28	**P31CA12GEMNTLNW**	0.35 kg	**P31CA12GEBNTLNW**	0.35 kg



Ball Valve + Filter/Regulator + Lubricator Combinations + Poly bowl
5 micron element, 8 bar Regulator + Gauge and Wall Mounting Brackets
Inlet pressure 10 bar, Secondary pressure 6.3 bar, 1 bar pressure drop.

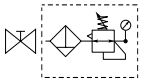

Port size	Flow dm³/s	Flow (scfm)	Manual Drain	Weight	Pulse Drain	Weight
1/4"	14	28	**P31QA12GEMNTLNW**	0.54 kg	**P31QA12GEBNTLNW**	0.54 kg



Ball Valve + Filter/Regulator Combinations + Poly bowl
5 micron element, 8 bar Regulator + Gauge and Wall Mounting Brackets
Inlet pressure 10 bar, Secondary pressure 6.3 bar, 1 bar pressure drop.

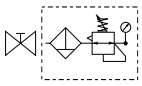

Port size	Flow dm³/s	Flow (scfm)	Manual Drain	Weight	Pulse Drain	Weight
1/4"	14	28	**P31QN12GEMNTW**	0.4 kg	**P31QN12GEBNTW**	0.4 kg

P31						E		N		LN	W

Combination	
Combination	C
Shut off + Combi [1]	Q

Combination type	
F/R+L	A
F+R+L	B
F/R	N

Thread type	
BSPP	1
NPT	9

Port size	
1/4	2

Bowl type	
Poly bowl with bowl guard	G
Metal bowl without sight glass	M

Note: All bowl types are the same for each component
Example: If a "G" is specified for a F+L, both units would get a poly bowl with bowl guard.

Drain type	
Manual drain	M
Pulse drain	B

Adjustment range	
With square gauge	
2 bar *	V
4 bar	S
8 bar **	T

Add only for options with Lubricator

* Unit comes with 0-4 bar, gauge respectively

** Unit comes with 0-10 bar, gauge respectively

[1] Option not available with F+R+L

Tel: +45 63 12 83 00 | Email: ps@hymatik.com | www.hymatik.com | Hvidkaervej 27a, DK-5250 Odense SV, Denmark

Popular Combinations - P32 Series



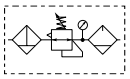

Filter + Regulator + Lubricator Combinations + Poly bowl
5 micron element, 8 bar Regulator + Gauge and Wall Mounting Brackets
Inlet pressure 10 bar, Secondary pressure 6.3 bar, 1 bar pressure drop.

Port size	Flow dm³/s	(scfm)	Manual Drain	Weight	Auto Drain	Weight
1/4”	20	42	**P32CB12GEMNGLNW**	1.29 kg	**P32CB12GEANGLNW**	1.29 kg
3/8”	32	68	**P32CB13GEMNGLNW**	1.29 kg	**P32CB13GEANGLNW**	1.29 kg
1/2”	40	85	**P32CB14GEMNGLNW**	1.29 kg	**P32CB14GEANGLNW**	1.29 kg



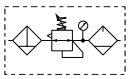

Filter/Regulator + Lubricator Combinations + Poly bowl
5 micron element, 8 bar Regulator + Gauge and Wall Mounting Brackets
Inlet pressure 10 bar, Secondary pressure 6.3 bar, 1 bar pressure drop.

Port size	Flow dm³/s	(scfm)	Manual Drain	Weight	Auto Drain	Weight
1/4”	22	45	**P32CA12GEMNGLNW**	1.03 kg	**P32CA12GEANGLNW**	1.03 kg
3/8”	33	70	**P32CA13GEMNGLNW**	1.03 kg	**P32CA13GEANGLNW**	1.03 kg
1/2”	43	90	**P32CA14GEMNGLNW**	1.03 kg	**P32CA14GEANGLNW**	1.03 kg



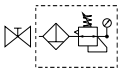

Ball Valve + Filter/Regulator + Lubricator Combinations + Poly bowl
5 micron element, 8 bar Regulator + Gauge and Wall Mounting Brackets
Inlet pressure 10 bar, Secondary pressure 6.3 bar, 1 bar pressure drop.

Port size	Flow dm³/s	(scfm)	Manual Drain	Weight	Auto Drain	Weight
3/8”	33	70	**P32QA13GEMNGLNW**	1.5 kg	**P32QA13GEANGLNW**	1.5 kg
1/2”	43	90	**P32QA14GEMNGLNW**	1.5 kg	**P32QA14GEANGLNW**	1.5 kg



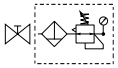

Ball Valve + Filter/Regulator Combinations + Poly bowl
5 micron element, 8 bar Regulator + Gauge and Wall Mounting Brackets
Inlet pressure 10 bar, Secondary pressure 6.3 bar, 1 bar pressure drop.

Port size	Flow dm³/s	(scfm)	Manual Drain	Weight	Auto Drain	Weight
3/8”	33	70	**P32QN13GEMNGW**	1.1 kg	**P32QN13GEANGW**	1.1 kg
1/2”	43	90	**P32QN14GEMNGW**	1.1 kg	**P32QN14GEANGW**	1.1 kg

P32					E		N		LN	W

Combination	
Combination	C
Shut off + Combination [1]	Q

[1] Option not available with F+R+L and 1/4” port size (2)

Thread type	
BSPP	1
NPT	9

Port size	
1/4	2
3/8	3
1/2	4

Drain type	
Auto drain	A
Manual drain	M

Adjustment range	
With round gauge	
0-2 bar; 0-30 psi; 0.2 MPa	Z
4 bar; 60 psi; 0.4 MPa	M
8 bar; 125 psi; 0.8 MPa	G

Add only for options with Lubricator

Combination type	
F/R+L	A
F+R+L	B
F/R	N

Bowl type	
Poly bowl with bowl guard	G
Metal bowl with sight glass	S

Note: All bowl types are the same for each component

Example: If a “G” is specified for a F+L, both units would get a poly bowl with bowl guard.

Tel: +45 63 12 83 00 | Email: ps@hymatik.com | www.hymatik.com | Hvidkaervej 27a, DK-5250 Odense SV, Denmark

Popular Combinations - P33 Series



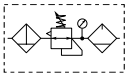

Filter + Regulator + Lubricator Combinations + Poly bowl
5 micron element, 8 bar Regulator + Gauge and Wall Mounting Brackets
Inlet pressure 10 bar, Secondary pressure 6.3 bar, 1 bar pressure drop.

Port size	Flow dm³/s	Flow (scfm)	Manual Drain	Weight	Auto Drain	Weight
1/2"	43	90	**P33CB14GEMNGLNW**	1.84 kg (4.06 lbs)	**P33CB14GEANGLNW**	1.84 kg (4.06 lbs)
3/4"	52	110	**P33CB16GEMNGLNW**	1.84 kg (4.06 lbs)	**P33CB16GEANGLNW**	1.84 kg (4.06 lbs)



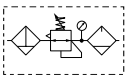

Filter/Regulator + Lubricator Combinations + Poly bowl
5 micron element, 8 bar Regulator + Gauge and Wall Mounting Brackets
Inlet pressure 10 bar, Secondary pressure 6.3 bar, 1 bar pressure drop.

Port size	Flow dm³/s	Flow (scfm)	Manual Drain	Weight	Auto Drain	Weight
1/2"	52	110	**P33CA14GEMNGLNW**	1.51 kg (3.33 lbs)	**P33CA14GEANGLNW**	1.51 kg (3.33 lbs)
3/4"	71	150	**P33CA16GEMNGLNW**	1.51 kg (3.33 lbs)	**P33CA16GEANGLNW**	1.51 kg (3.33 lbs)



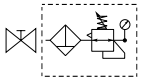

Ball Valve + Filter/Regulator + Lubricator Combinations + Poly bowl
5 micron element, 8 bar Regulator + Gauge and Wall Mounting Brackets
Inlet pressure 10 bar, Secondary pressure 6.3 bar, 1 bar pressure drop.

Port size	Flow dm³/s	Flow (scfm)	Manual Drain	Weight	Auto Drain	Weight
1/2"	52	110	**P33QA14GEMNGLNW**	2.35 kg (5.2 lbs)	**P33QA14GEANGLNW**	2.35 kg (5.2 lbs)
3/4"	71	150	**P33QA16GEMNGLNW**	2.35 kg (5.2 lbs)	**P33QA16GEANGLNW**	2.35 kg (5.2 lbs)



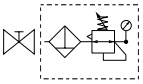

Ball Valve + Filter/Regulator Combinations + Poly bowl
5 micron element, 8 bar Regulator + Gauge and Wall Mounting Brackets
Inlet pressure 10 bar, Secondary pressure 6.3 bar, 1 bar pressure drop.

Port size	Flow dm³/s	Flow (scfm)	Manual Drain	Weight	Auto Drain	Weight
1/2"	52	110	**P33QN14GEMNGW**	1.7 kg (3.75 lbs)	**P33QN14GEANGW**	1.7 kg (3.75 lbs)
3/4"	71	150	**P33QN16GEMNGW**	1.7 kg (3.75 lbs)	**P33QN16GEANGW**	1.7 kg (3.75 lbs)

P 3 3 [ ] [ ] [ ] [ ] [ ] **E** [ ] **N** [ ] **L N** **W**

Combination	
Combination	**C**
Shut off + Combination [1]	**Q**

[1] Option not available with F+R+L

Thread type	
BSPP	**1**
NPT	**9**

Port size	
1/2	**4**
3/4	**6**

Drain type	
Auto drain	**A**
Manual drain	**M**

Adjustment range	
With round gauge	
0-2 bar; 0-30 psi; 0.2 MPa	**Z**
4 bar; 60 psi; 0.4 MPa	**M**
8 bar; 125 psi; 0.8 MPa	**G**

Add only for options with Lubricator

Combination type	
F/R+L	**A**
F+R+L	**B**
F/R	**N**

Bowl type	
Poly bowl with bowl guard	**G**
Metal bowl with sight glass	**S**

Note: All bowl types are the same for each component

Example: If a "G" is specified for a F+L, both units would get a poly bowl with bowl guard.

Tel: +45 63 12 83 00 | Email: ps@hymatik.com | www.hymatik.com | Hvidkaervej 27a, DK-5250 Odense SV, Denmark

Popular Combination Dimensions - mm (inches)

P31

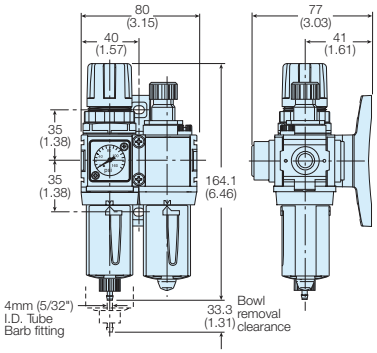

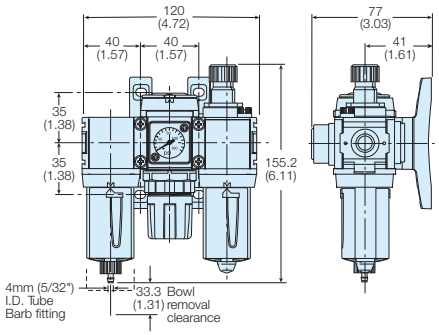

P32

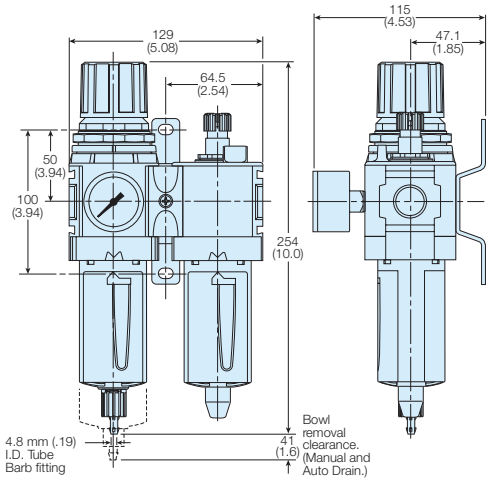

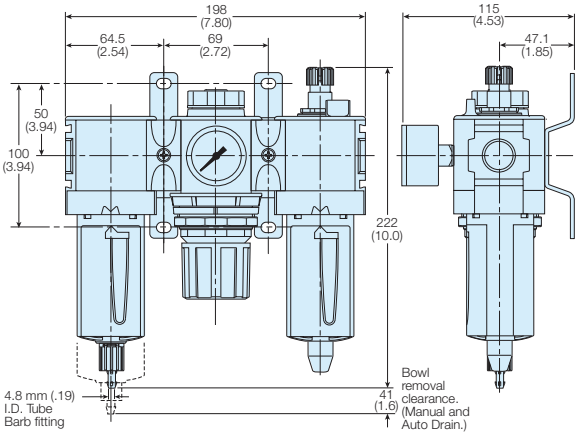

P33

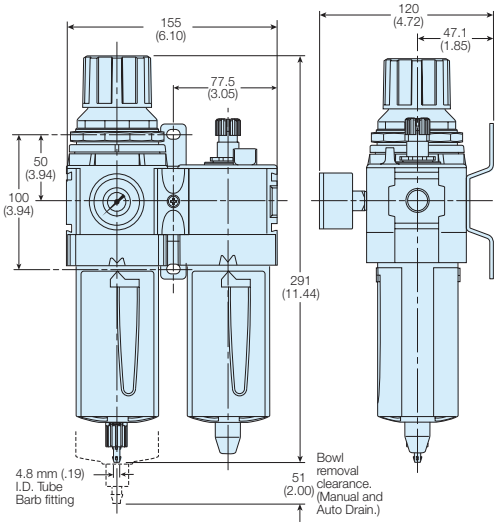

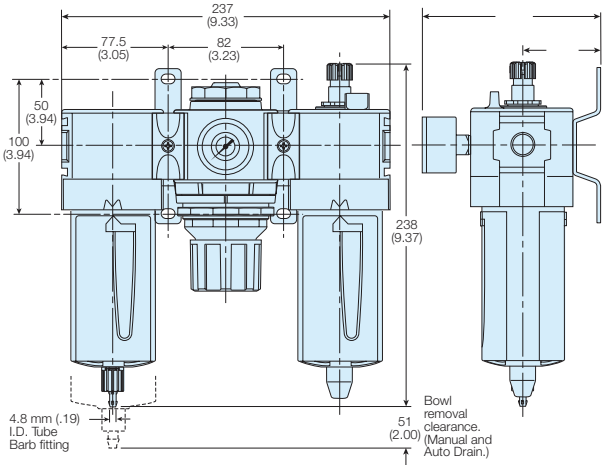

Tel: +45 63 12 83 00 | Email: ps@hymatik.com | www.hymatik.com | Hvidkaervej 27a, DK-5250 Odense SV, Denmark



Filters - 5 µm

Port	Description	Order code
1/4”	Poly bowl - Manual drain	**P31FB12EGMN**
1/4”	Poly bowl - Pulse drain	**P31FB12EGBN**
1/4”	Metal bowl - Manual drain	**P31FB12EMMN**
1/4”	Metal bowl - Pulse drain	**P31FB12EMBN**
1/4	Poly bowl - Manual drain	**P32FB12EGMN**
1/4	Poly bowl - Auto drain	**P32FB12EGAN**
1/4	Metal bowl sight glass - Manual drain	**P32FB12ESMN**
1/4	Metal bowl sight glass - Auto drain	**P32FB12ESAN**
3/8	Poly bowl - Manual drain	**P32FB13EGMN**
3/8	Poly bowl - Auto drain	**P32FB13EGAN**
3/8	Metal bowl sight glass - Manual drain	**P32FB13ESMN**
3/8	Metal bowl sight glass - Auto drain	**P32FB13ESAN**
1/2	Poly bowl - Manual drain	**P32FB14EGMN**
1/2	Poly bowl - Auto drain	**P32FB14EGAN**
1/2	Metal bowl sight glass - Manual drain	**P32FB14ESMN**
1/2	Metal bowl sight glass - Auto drain	**P32FB14ESAN**
1/2”	Poly bowl - Manual drain	**P33FA14EGMN**
1/2”	Poly bowl - Auto drain	**P33FA14EGAN**
1/2”	Metal bowl sight glass - Manual drain	**P33FA14ESMN**
1/2”	Metal bowl sight glass - Auto drain	**P33FA14ESAN**
3/4”	Poly bowl - Manual drain	**P33FA16EGMN**
3/4”	Poly bowl - Auto drain	**P33FA16EGAN**
3/4”	Metal bowl sight glass - Manual drain	**P33FA16ESMN**
3/4”	Metal bowl sight glass - Auto drain	**P33FA16ESAN**



Regulators

Port	Description	Order code
1/4”	8 bar relieving	**P31RB12BNNP**
1/4”	8 bar relieving + gauge	**P31RB12BNTP**
1/4”	8 bar (125 psi) Relieving	**P32RB12BNNP**
1/4”	8 bar (125 psi) Relieving + Gauge	**P32RB12BNGP**
3/8”	8 bar (125 psi) Relieving	**P32RB13BNNP**
3/8”	8 bar (125 psi) Relieving + Gauge	**P32RB13BNGP**
1/2”	8 bar (125 psi) Relieving	**P32RB14BNNP**
1/2”	8 bar (125 psi) Relieving + Gauge	**P32RB14BNGP**
1/2”	8 bar (125 psi) Relieving	**P33RA14BNNP**
1/2”	8 bar (125 psi) Relieving + Gauge	**P33RA14BNGP**
3/4”	8 bar (125 psi) Relieving	**P33RA16BNNP**
3/4”	8 bar (125 psi) Relieving + Gauge	**P33RA16BNGP**



Coalescing Filters + Absorbers - 0,01 µm

Port	Description	Order code
1/4”	Poly bowl - 0.01 µ - Manual drain	**P31FB12DGMN**
1/4”	Poly bowl - 0.01 µ - Pulse drain	**P31FB12DGBN**
1/4”	Metal bowl - 0.01 µ - Manual drain	**P31FB12DMMN**
1/4”	Metal bowl - 0.01 µ - Pulse drain	**P31FB12DMBN**
1/4”	Poly bowl - Adsorber	**P31FB12AGMN**
1/4”	Metal bowl - Adsorber	**P31FB12AMMN**
1/4”	Poly bowl - 0.01 µ, Manual drain	**P32FB12DGMN**
1/4”	Poly bowl - 0.01 µ, Auto drain	**P32FB12DGAN**
1/4”	Metal bowl sight glass - 0.01 µ, Man. drain	**P32FB12DSMN**
1/4”	Metal bowl sight glass - 0.01 µ, Auto drain	**P32FB12DSAN**
3/8”	Poly bowl - 0.01 µ, Manual drain	**P32FB13DGMN**
3/8”	Poly bowl - 0.01 µ, Auto drain	**P32FB13DGAN**
3/8”	Metal bowl sight glass - 0.01 µ, Man. drain	**P32FB13DSMN**
3/8”	Metal bowl sight glass - 0.01 µ, Auto drain	**P32FB13DSAN**
1/2”	Poly bowl - 0.01 µ, Manual drain	**P32FB14DGMN**
1/2”	Poly bowl - 0.01 µ, Auto drain	**P32FB14DGAN**
1/2”	Metal bowl sight glass - 0.01 µ, Man. drain	**P32FB14DSMN**
1/2”	Metal bowl sight glass - 0.01 µ, Auto drain	**P32FB14DSAN**
1/4”	Poly bowl - Adsorber	**P32FB12AGMN**
1/4”	Metal bowl sight glass - Adsorber	**P32FB12ASMN**
3/8”	Poly bowl - Adsorber	**P32FB13AGMN**
3/8”	Metal bowl sight glass - Adsorber	**P32FB13ASMN**
1/2”	Poly bowl - Adsorber	**P32FB14AGMN**
1/2”	Metal bowl sight glass - Adsorber	**P32FB14ASMN**
1/2”	Poly bowl - 0.01 µ, Manual drain	**P33FA14DGMN**
1/2”	Poly bowl - 0.01 µ, Auto drain	**P33FA14DGAN**
1/2”	Metal bowl sight glass - 0.01 µ, Man. drain	**P33FA14DSMN**
1/2”	Metal bowl sight glass - 0.01 µ, Auto drain	**P33FA14DSAN**
3/4”	Poly bowl - 0.01 µ, Manual drain	**P33FA16DGMN**
3/4”	Poly bowl - 0.01 µ, Auto drain	**P33FA16DGAN**
3/4”	Metal bowl sight glass - 0.01 µ, Man. drain	**P33FA16DSMN**
3/4”	Metal bowl sight glass - 0.01 µ, Auto drain	**P33FA16DSAN**
1/2”	Poly bowl - Adsorber	**P33FA14AGMN**
1/2”	Metal bowl sight glass - Adsorber	**P33FA14ASMN**
3/4”	Poly bowl - Adsorber	**P33FA16AGMN**
3/4”	Metal bowl sight glass - Adsorber	**P33FA16ASMN**

Tel: +45 63 12 83 00 | Email: ps@hymatik.com | www.hymatik.com | Hvidkaervej 27a, DK-5250 Odense SV, Denmark



Filter Regulators - (P31) pressures 2 & 4 bar (P32/P33) pressures 2,4 & 17 bar available.

Port	Description	Order code
1/4”	8 bar (125 psi) Relieving - Poly bowl - Manual drain	**P31EB12EGMBNTP**
1/4”	8 bar (125 psi) Relieving - Poly bowl - Pulse drain	**P31EB12EGBBNTP**
1/4”	8 bar (125 psi) Relieving - Metal bowl - Manual drain	**P31EB12EMMBNTP**
1/4”	8 bar (125 psi) Relieving - Metal bowl - Pulse drain	**P31EB12EMBBNTP**
1/4”	8 bar (125 psi) Relieving - Poly bowl - Manual drain	**P32EB12EGMBNGP**
1/4”	8 bar (125 psi) Relieving - Poly bowl - Auto drain	**P32EB12EGABNGP**
1/4”	8 bar (125 psi) Relieving - Metal bowl sight glass - Manual drain	**P32EB12ESMBNGP**
1/4”	8 bar (125 psi) Relieving - Metal bowl sight glass - Auto drain	**P32EB12ESABNGP**
3/8”	8 bar (125 psi) Relieving - Poly bowl - Manual drain	**P32EB13EGMBNGP**
3/8”	8 bar (125 psi) Relieving - Poly bowl - Auto drain	**P32EB13EGABNGP**
3/8”	8 bar (125 psi) Relieving - Metal bowl sight glass - Manual drain	**P32EB13ESMBNGP**
3/8”	8 bar (125 psi) Relieving - Metal bowl sight glass - Auto drain	**P32EB13ESABNGP**
1/2”	8 bar (125 psi) Relieving - Poly bowl - Manual drain	**P32EB14EGMBNGP**
1/2”	8 bar (125 psi) Relieving - Poly bowl - Auto drain	**P32EB14EGABNGP**
1/2”	8 bar (125 psi) Relieving - Metal bowl sight glass - Manual drain	**P32EB14ESMBNGP**
1/2”	8 bar (125 psi) Relieving - Metal bowl sight glass - Auto drain	**P32EB14ESABNGP**
1/2”	8 bar (125 psi) Relieving - Poly bowl - Manual drain	**P33EA14EGMBNGP**
1/2”	8 bar (125 psi) Relieving - Poly bowl - Auto drain	**P33EA14EGABNGP**
1/2”	8 bar (125 psi) Relieving - Metal bowl sight glass - Manual drain	**P33EA14ESMBNGP**
1/2”	8 bar (125 psi) Relieving - Metal bowl sight glass - Auto drain	**P33EA14ESABNGP**
3/4”	8 bar (125 psi) Relieving - Poly bowl - Manual drain	**P33EA16EGMBNGP**
3/4”	8 bar (125 psi) Relieving - Poly bowl - Auto drain	**P33EA16EGABNGP**
3/4”	8 bar (125 psi) Relieving - Metal bowl sight glass - Manual drain	**P33EA16ESMBNGP**
3/4”	8 bar (125 psi) Relieving - Metal bowl sight glass - Auto drain	**P33EA16ESABNGP**



Lubricators

Port	Description	Order code
1/4”	Poly bowl - No drain	**P31LB12LGNN**
1/4”	Metal bowl - No drain	**P31LB12LMNN**
1/4”	Poly bowl - No drain	**P32LB12LGNN**
1/4”	Metal bowl - No drain	**P32LB12LSNN**
3/8”	Poly bowl - No drain	**P32LB13LGNN**
3/8”	Metal bowl - No drain	**P32LB13LSNN**
1/2”	Poly bowl - No drain	**P32LB14LGNN**
1/2”	Metal bowl - No drain	**P32LB14LSNN**
1/2”	Poly bowl - No drain	**P33LA14LGNN**
1/2”	Metal bowl - No drain	**P33LA14LSNN**
3/4”	Poly bowl - No drain	**P33LA16LGNN**
3/4”	Metal bowl - No drain	**P33LA16LSNN**



Gauges

Port	Description			Order code
P31	Square Flush Mounting Gauge Kit	0-4 bar		**K4511SCR04B**
		0-11 bar		**K4511SCR11B**
P31	40mm Round Gauge	0-30 psi / 0-2 bar	1/8”	**P3D-KAB1AYN**
		0-60 psi / 0-4.1 bar	1/8”	**P3D-KAB1ALN**
		0-160 psi / 0-10 bar	1/8”	**P3D-KAB1ANN**
P32 / P33	40mm Round Gauge	0-60 psi / 0-4.1 bar	1/4”	**P6G-ERB2040**
		0-160 psi / 0-10 bar	1/4”	**P6G-ERB2110**
		0-300 psi / 0-20 bar	1/4”	**P6G-ERB2200**

Tel: +45 63 12 83 00 | Email: ps@hymatik.com | www.hymatik.com | Hvidkaervej 27a, DK-5250 Odense SV, Denmark

Redundant Safety Exhaust Valve



P33T Schematic

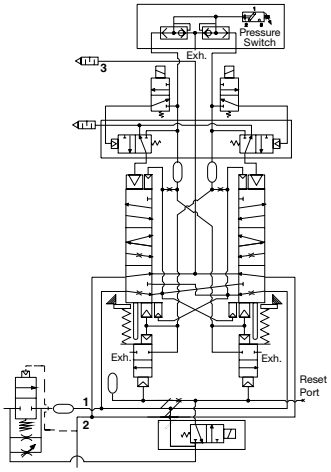

Symbol

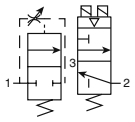

- Proven control reliable technology with integrated soft start
- Soft start application of air to the system when energized; can be adjusted for slower or faster buildup of system pressure
- Rapid exhaust of downstream air when de-energized to remove stored energy and allow safe access
- Memory, monitoring, and air flow control functions are integrated into two identical valve elements. Valves lock-out if asynchronous movement of valve elements occurs during actuation or de-actuation, resulting in a residual outlet pressure of less than 1% of supply.
- Reset can only be accomplished by the integrated electrical (solenoid) reset. Cannot be reset by removing and re-applying supply pressure.
- Basic 3/2 normally closed valve function: Dirt tolerant, wear compensating poppet design for quick response and high flow capacity.
- LED indicators of main solenoid operation, reset solenoid operation, and status indicator condition.
- Optional transducer for monitoring of downstream pressure in the system.
- Dual exhaust silencers included.
- Not for use with clutch / brake applications.
- For use in conjunction with a safety relay or safety PLC.

Options:

P33TA [ ] **6** **R** **G** **4** [ ] **2CN**

Body size	
Standard	P33T

Port size	
3/4"	6

Operator	
15mm Solenoid	G

Solenoid	
Dual M12 connector without transducer	F
Triple M12 connector with transducer	G

Voltage	
24VDC with manual override	2CN

Thread type	
BSPP	1
NPT	9

Type	
Solenoid pilot + gauge	R

Mounting	
Cat 4 w/ bracket	4

Port size			Cv		Height	Width	Depth	Weight	
Inlet	Outlet	Transducer	1 to 2	2 to 3	mm (inches)	mm (inches)	mm (inches)	kg (lb)	Part number*
3/4	3/4	w/o transducer	3.7	8.5	273.8 (10.78)	136.0 (5.35)	147.6 (581)	7.3 (16.1)	**P33TA16RG4F2CN**
3/4	3/4	w/ transducer	3.7	8.5	273.8 (10.78)	136.0 (5.35)	147.6 (581)	7.4 (16.3)	**P33TA16RG4G2CN**

* BSPP port threads. For NPT threads, replace "1" in the part number with a "9".

Parker Hannifin Corporation
Pneumatic Division - Europe

Tel: +45 63 12 83 00 | Email: ps@hymatik.com | www.hymatik.com | Hvidkaervej 27a, DK-5250 Odense SV, Denmark

Technical Information

Pilot Solenoids:	According to VDE 0580
Enclosure rating:	According to DIN 400 50 IP65
Connector socket:	According to DIN 43650 Form A
	Three solenoids, rated for continuous duty
Standard voltages:	24VDC
Power consumption (each solenoid): for primary and reset solenoids:	1.2 Watts on DC
Enclosure rating:	IP65, IEC 60529
Electrical connection:	M12, 5-pin
Ambient temperature:	15°F to 122°F (-10°C to 50°C)
Media temperature:	40°F to 175°F (4°C to 80°C)
Flow media:	Compressed Air, Filtered to Minimum 40 Micron
Inlet pressure:	30 to 150 PSIG (2 to 10 bar)
Pressure switch rating (Status indicator):	5 Amps at 30 Volts DC.
Monitoring:	Dynamically, cyclically, internally during each actuating and de-actuating movement. Monitoring function has memory and requires an overt act to reset unit after lockout.
Mounting orientation:	Vertically with pilot solenoids on top
Port threads:	3/4 NPT, 3/4 BSPP
Control reliable:	Category 4 (Cat 4); performance Level e (PLe) in accordance with Machine directive - EN ISO 13849-1 (Certification pending)

Repair and Service Kits

Description	Part number
Black grill	**1834C05-001**
Body connector	**P32KA00CB**
Cables	
M12, 5-pin female to flying lead cable, TPE; 2 m (6.6 ft)	**RKC 4.5T-2/S1587**
M12, 5-pin male to flying lead cable, TPE; 2 m (6.6 ft)	**RSC 4.5T-2/S1587**
Port block kit	
1/2 NPT	**P32KA94CP**
3/4 NPT	**P32KA96CP**
1/2 BSPP	**P32KA14CP**
3/4 BSPP	**P32KA16CP**
Pressure switch	**1227A30-001**
Pressure transducer (Optional)	**1232H30-001**
T-bracket w/ body connector	**P32KA00MT**
T-bracket (Fits to body connector or port block)	**P32KA00MB**
Silencer(s) 3/4"	**5500A5013**
Solenoid (Main & reset)	**1527B7916-001**
Square flush mounting gauge kit, 0-160 psig	**K4511SCR160**

Valve Wiring

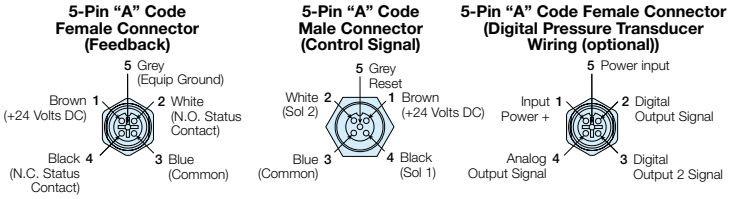

Dimensions mm (inches)

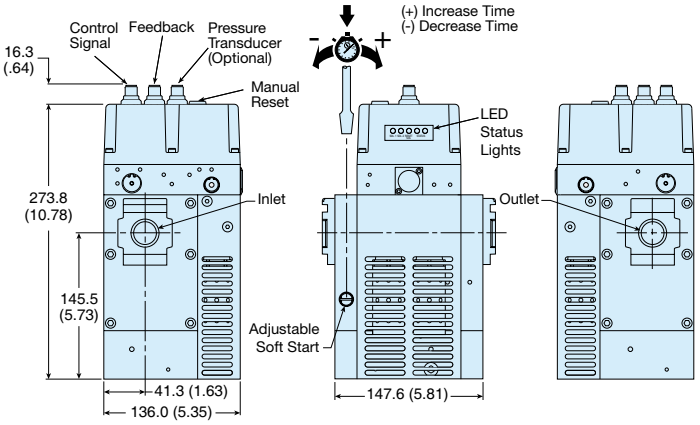

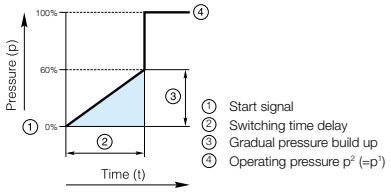

Angle Mounting Bracket

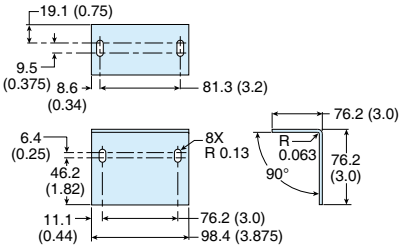

Note: Mounting bracket and installation screws included and required to install unit in the system.

Tel: +45 63 12 83 00 | Email: ps@hymatik.com | www.hymatik.com | Hvidkaervej 27a, DK-5250 Odense SV, Denmark

Filter Dimensions - mm (inches)

P31

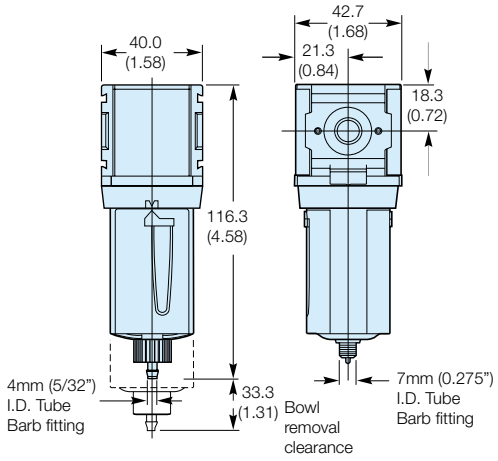

P32

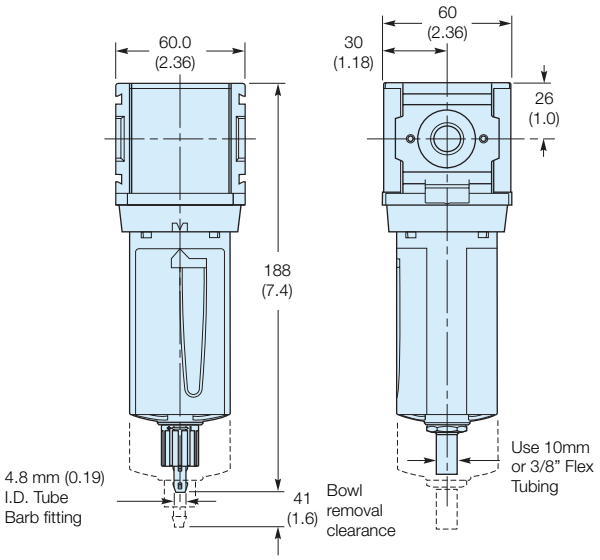

Manual Drain **Automatic Drain**

P33

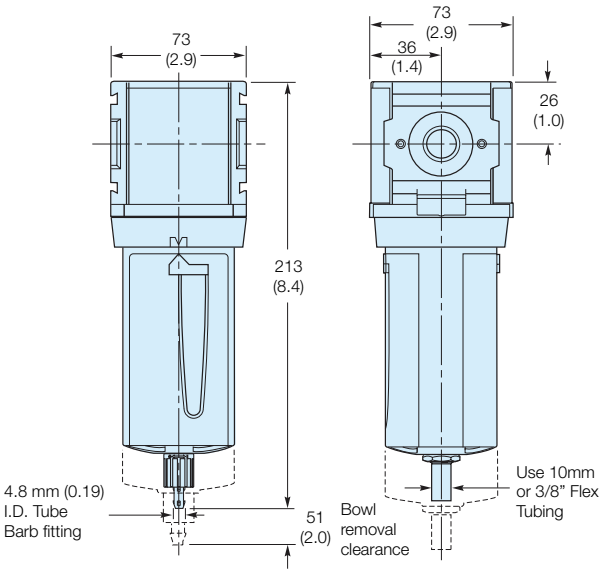

Manual Drain **Automatic Drain**

Tel: +45 63 12 83 00 | Email: ps@hymatik.com | www.hymatik.com | Hvidkaervej 27a, DK-5250 Odense SV, Denmark

Coalescing / Adsorber Filter Dimensions - mm (inches)

P31

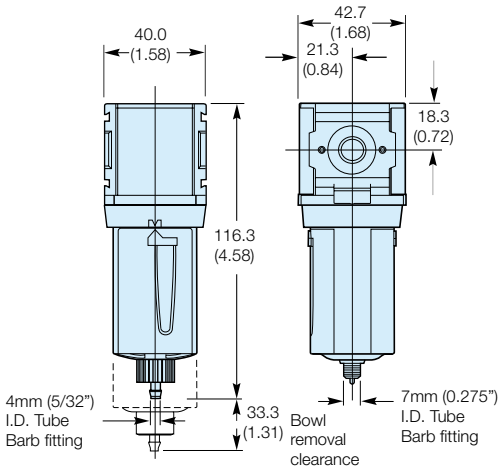

P32

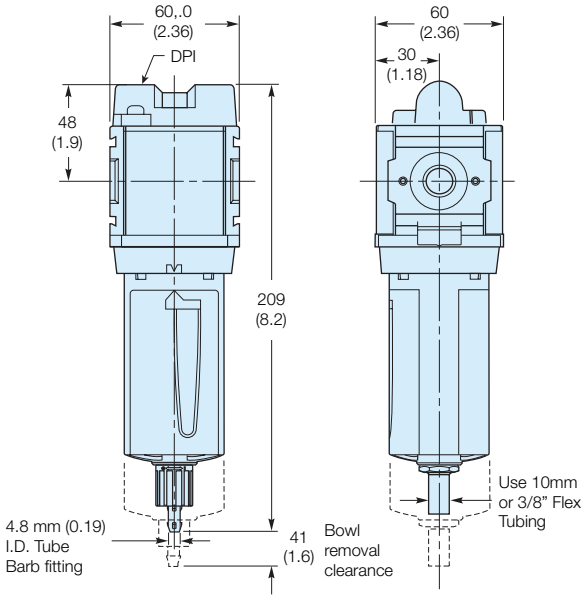

Manual Drain **Automatic Drain**

P33

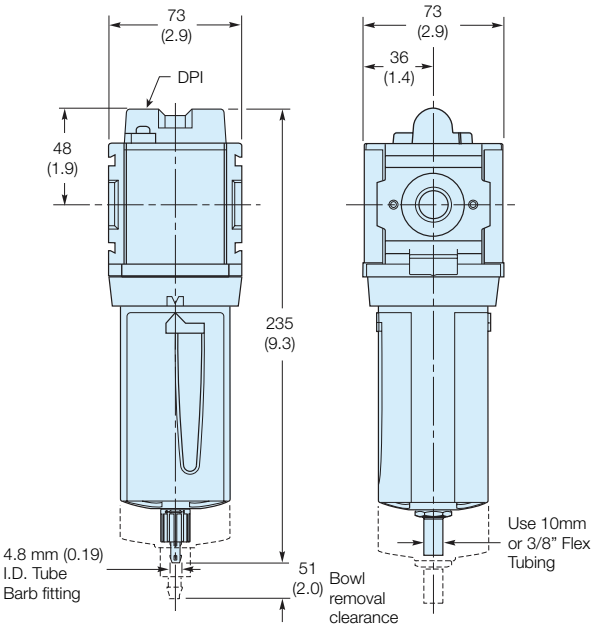

Manual Drain **Automatic Drain**

Tel: +45 63 12 83 00 | Email: ps@hymatik.com | www.hymatik.com | Hvidkaervej 27a, DK-5250 Odense SV, Denmark

Regulator Dimensions - mm (inches)

P31

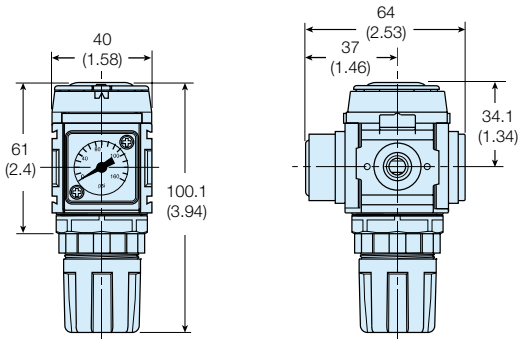

NOTE: Ø 30 mm hole required for panel nut mounting.

P32

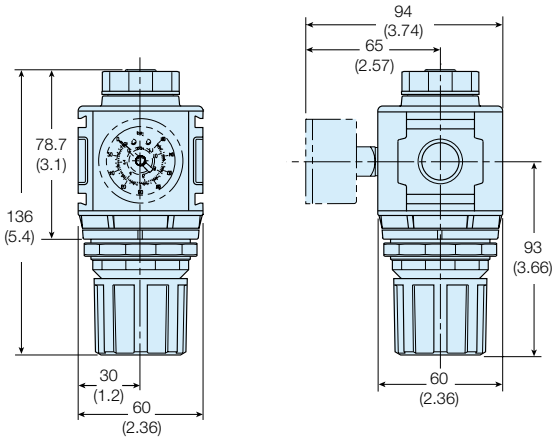

NOTE: Ø 47 mm hole required for panel nut mounting.

P33

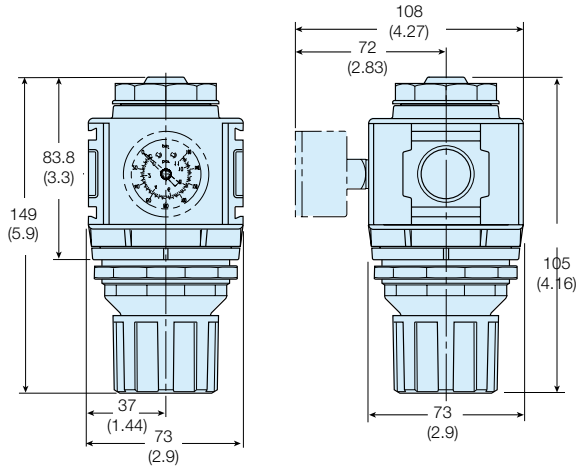

NOTE: Ø 60 mm hole required for panel nut mounting.

Tel: +45 63 12 83 00 | Email: ps@hymatik.com | www.hymatik.com | Hvidkaervej 27a, DK-5250 Odense SV, Denmark

Filter Regulator Dimensions - mm (inches)

P31

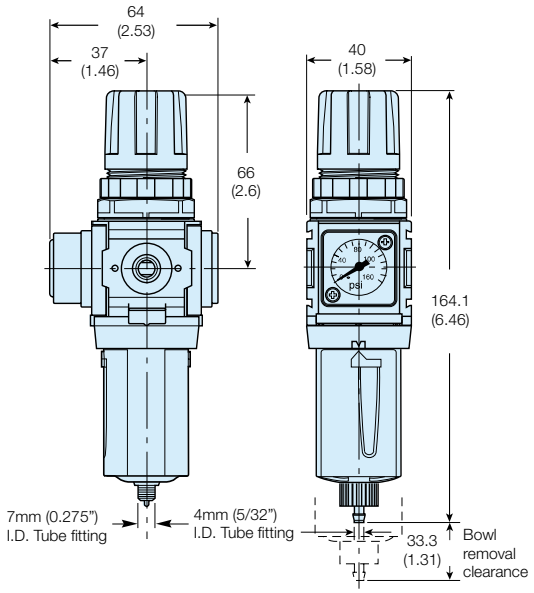

Note:
Flush-mounted gauge kits will not fit units originally purchased with threaded gauge ports.

P32

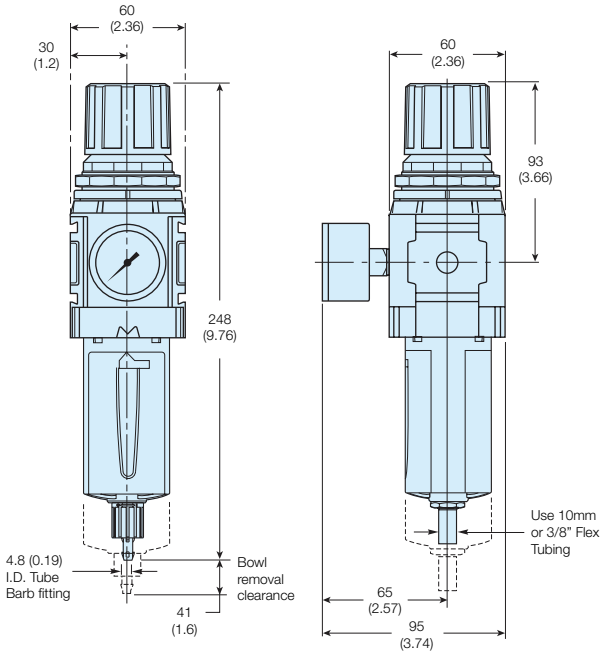

Manual Drain **Automatic Drain**

P33

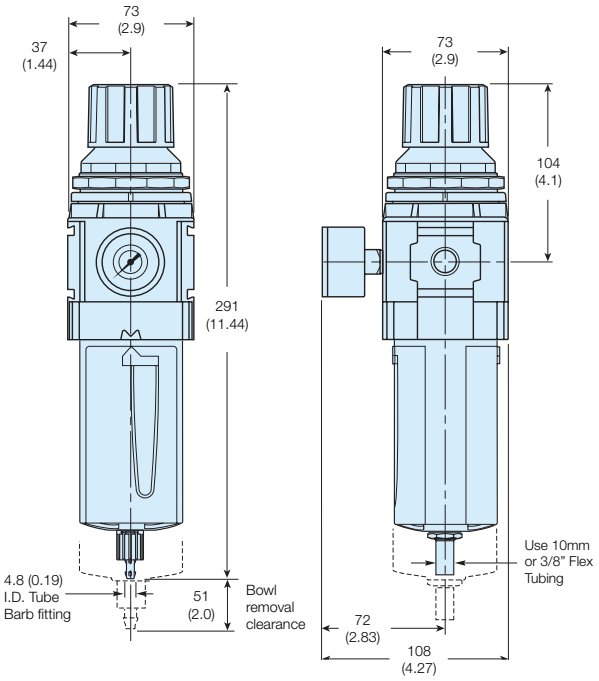

Manual Drain **Automatic Drain**

Tel: +45 63 12 83 00 | Email: ps@hymatik.com | www.hymatik.com | Hvidkaervej 27a, DK-5250 Odense SV, Denmark

Lubricator Dimensions - mm (inches)

P31

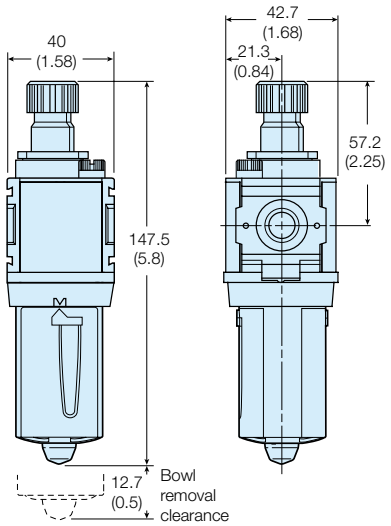

P32

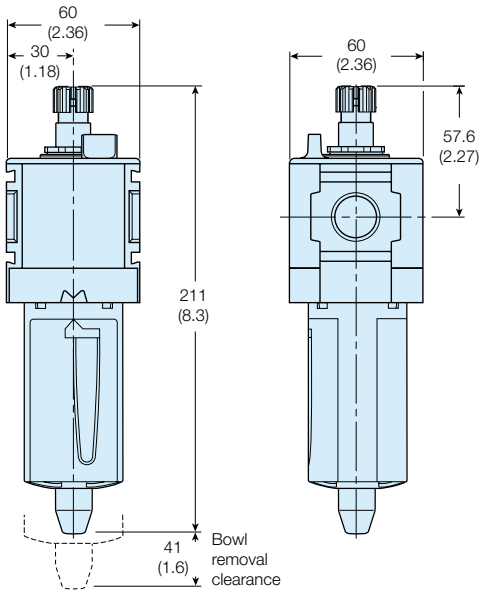

P33

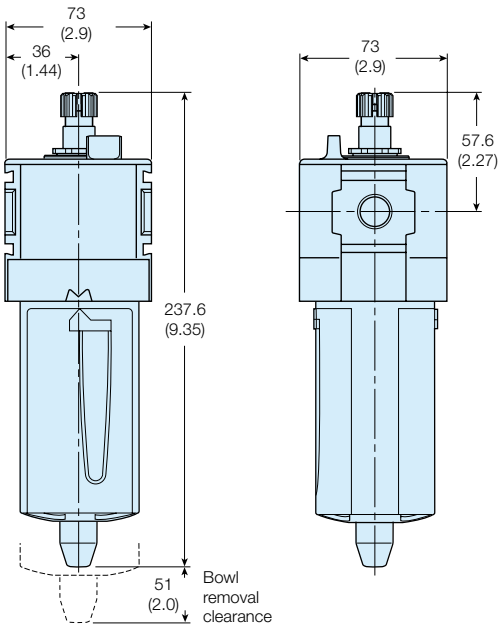

Tel: +45 63 12 83 00 | Email: ps@hymatik.com | www.hymatik.com | Hvidkaervej 27a, DK-5250 Odense SV, Denmark

Modular Ball Valve Dimensions - mm (inches)

P31

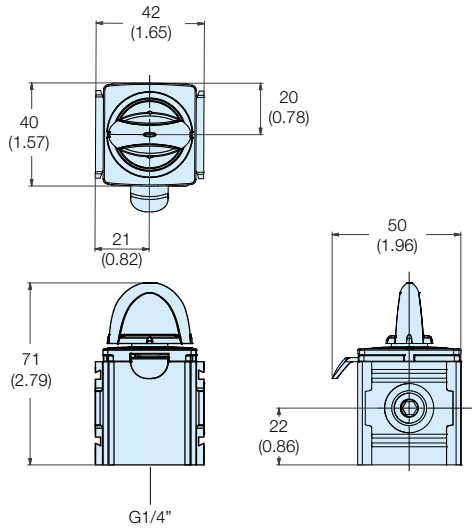

P32

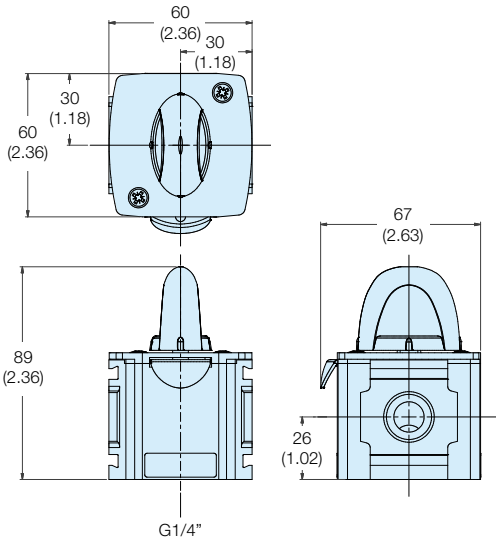

P33

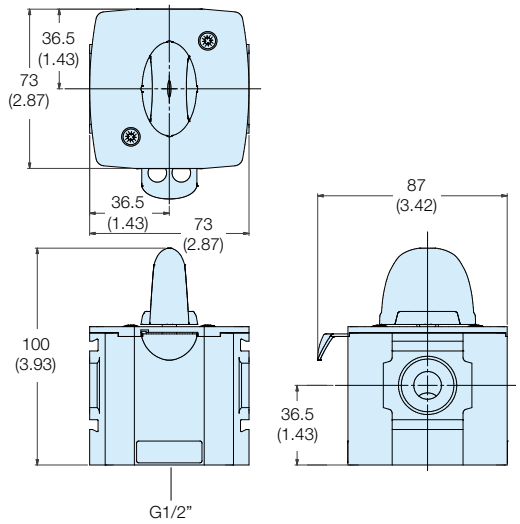

Parker Hannifin Corporation
Pneumatic Division - Europe

Tel: +45 63 12 83 00 | Email: ps@hymatik.com | www.hymatik.com | Hvidkaervej 27a, DK-5250 Odense SV, Denmark

Combined Soft Start Dump Valve and Remote Operated Dump Valve
Dimensions - mm (inches)

P31

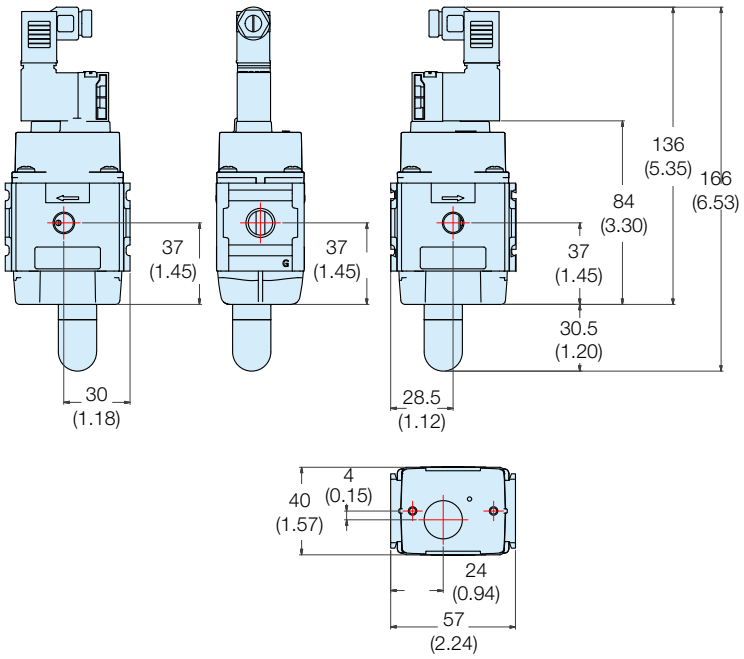

P32

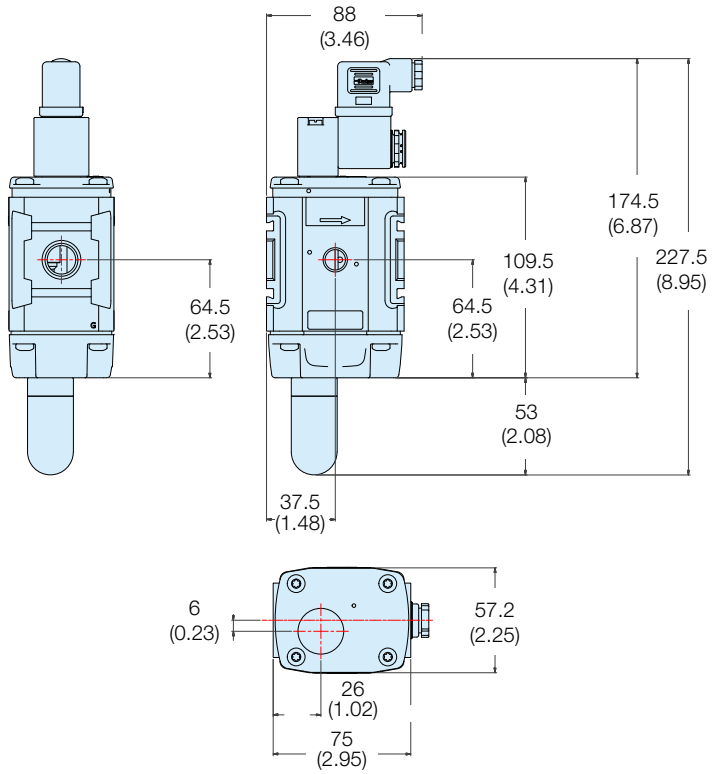

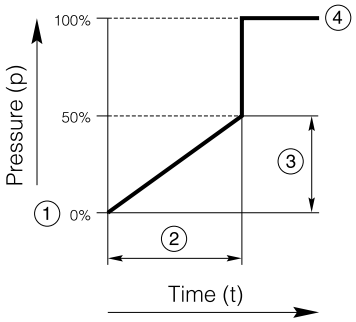

① Start signal
② Switching time delay
③ Gradual pressure build up
④ Operating pressure p^2 (=p^1)

Tel: +45 63 12 83 00 | Email: ps@hymatik.com | www.hymatik.com | Hvidkaervej 27a, DK-5250 Odense SV, Denmark

Combined Soft Start Dump Valve and Remote Operated Dump Valve

Port	Description	Order code
1/4	Solenoid operated (not included)	**P31TA12SGN0000**
1/4	24VDC Solenoid & cable plug	**P31TA12SGNC2CN**
1/4	Air pilot operated	**P31TA12PPN**
1/2	Solenoid operated (not included)	**P32TA14SCN0000**
1/2	24VDC 30mm coil & cable plug incl.	**P32TA14SCNA2CN**
1/2	Air pilot operated	**P32TA14PPN**
1/2	Solenoid operated (not included) Category 2 - Machine Directive Valve Contact - Sales Office for further details.	**P32TA14SC20000**

Soft Start Valve

Port	Description	Order code
1/4	Solenoid operated (not included)	**P31SA12SGN0000**
1/4	24VDC Solenoid & cable plug	**P31SA12SGNC2CN**
1/4	External air pilot (1/8 threaded)	**P31SA12PPN**
1/2	Solenoid operated (not included)	**P32SA14SCN0000**
1/2	24VDC 30mm coil & cable plug	**P32SA14SCNA2CN**
1/2	Internal air pilot operated	**P32SA14Y0N**
1/2	External air pilot (1/8 threaded)	**P32SA14PPN**

Remote Operated Dump Valve

Port	Description	Order code
1/4	Solenoid operated (not included)	**P31DA12SGN0000**
1/4	24VDC Solenoid & cable plug	**P31DA12SGNC2CN**
1/4	Air pilot operated	**P31DA12PPN**
1/2	Solenoid operated (not included)	**P32DA14SCN0000**
1/2	24VDC 30mm coil & cable plug incl.	**P32DA14SCNA2CN**
1/2	Air pilot operated	**P32DA14PPN**
1/2	Solenoid operated (not included) Category 2 - Machine Directive Valve Contact - Sales Office for further details.	**P32DA14SC20000**

Modular Ball Valve / Lockout Valve

Model type	Port size	Thread type	Flow dm^3/s (scfm)	Modular Ball Valve Flow from left to right
P31	1/4"	BSPP	20 (42.4)	**P31VB12LBNN**
P32	3/8"	BSPP	90 (190.7)	**P32VB13LBNN**
	1/2"	BSPP	122 (258.5)	**P32VB14LBNN**
P33	1/2"	BSPP	122 (258.5)	**P33VB14LBNN**
	3/4"	BSPP	122 (258.5)	**P33VB16LBNN**

For thread type: BSPP **1**
NPT **9**

Manifold Blocks

Model Type	In / Out Port Size	Auxiliary Port Size Top	Auxilliary Port Size Bottom	Thread Type	Order Code
P31	1/4"	1/4"	1/4"	BSPP	**P31MA12022N**
P32	1/2"	1/4"	1/2"	BSPP	**P32MA14024N**
P33	3/4"	1/4"	1/2"	BSPP	**P33MA16024N**

For thread type: BSPP **1**
NPT **9**

Branch Manifold

P32	1/2"	1/4"	1/4"	BSPP	**P32MD14022N**
P32	1/4"	1/4"	1/4"	BSPP	**P32MD12022N**

C-Bracket
(Fits to filter and lubricator body)

P31	
P31KA00MW	

T-Bracket
(Fits to body connector or port block)

	P32	**P33**
	P32KA00MB	**P32KA00MB**

T-Bracket w / Body Connector

P31	**P32**	**P33**
P31KA00MT	**P32KA00MT**	**P32KA00MT**

L-Bracket
(Fits to filter and lubricator body)

	P32	**P33**
	P32KA00ML	**P33KA00ML**

Angle Bracket
(Fits to regulator and filter/regulator)

P31	**P32**	**P33**
P31KB00MR	**P32KB00MR**	**P33KA00MR**

Panel mounting nut
(Aluminium)

P31	**P32**	**P33**
P31KA00MM	**P32KA00MM**	**P33KA00MM**

Body Connector 'O' ring kit -
Pack of 5

P31	**P32**
P31KA00CY	**P32KA00CY**

Body Connector

P31	**P32**	**P33**
P31KA00CB	**P32KA00CB**	**P32KA00CB**

Parker Hannifin Corporation
Pneumatic Division - Europe

Tel: +45 63 12 83 00 | Email: ps@hymatik.com | www.hymatik.com | Hvidkaervej 27a, DK-5250 Odense SV, Denmark

Accessories Kits

Series	Description	Order Code	
P31 P32 P33	Panel Mount Nut (Plastic)	**P31KA00MP** **P32KA00MP** **P33KA00MP**	
P31 P32 P33	Panel Mount Nut (Aluminium)	**P31KA00MM** **P32KA00MM** **P33KA00MM**	
P31 P32 P33	5µ Element Kit	**P31KA00ESE** **P32KA00ESE** **P33KA00ESE**	
P31 P32 P33	40µ Element Kit	**P31KA00ESG** **P32KA00ESG** **P33KA00ESG**	
P31 P32 P33	1µ Element Kit	**P31KA00ES9** **P32KA00ES9** **P33KA00ES9**	
P31 P32 P33	0.01µ Element Kit	**P31KA00ESC** **P32KA00ESC** **P33KA00ESC**	
P31 P32 P33	Adsorber Element Kit	**P31KA00ESA** **P32KA00ESA** **P33KA00ESA**	
P32 / P33	Auto Drain Kit	**P32KA00DA**	
P31 P32 / P33	Differential Pressure Indicator Kit	**P31KB00RQ** **P32KA00RQ**	
P31 P32 / P33	Fill Plug Kit	**P31KA00PL** **P32KA00PL**	
P31 / P32 / P33	Drip Control Assembly Kit	**P32KA00PG**	

Tel: +45 63 12 83 00 | Email: ps@hymatik.com | www.hymatik.com | Hvidkaervej 27a, DK-5250 Odense SV, Denmark

Accessories Kits

Series	Description	Order Code	
P31 P32 P33	Plastic Bowl with Bowl Guard & Manual Drain	**P31KB00BGM** **P32KB00BGM** **P33KA00BGM**	
P31	Plastic Bowl with Bowl Guard & Pulse Drain	**P31KB00BGB**	
P32 P33	Plastic Bowl with Bowl Guard & Auto Drain	**P32KB00BGA** **P33KA00BGA**	
P31	Metal Bowl without Sight Gauge & Pulse Drain	**P31KB00BMB**	
P32 P33	Metal Bowl with Sight Gauge & Manual Drain	**P32KB00BSM** **P33KA00BSM**	
P32 P33	Metal Bowl with Sight Gauge & Auto Drain	**P32KB00BSA** **P33KA00BSA**	
P31 P32 P33	Lubricator - Plastic Bowl with Bowl Guard & Close End	**P31KB00BGN** **P32KB00BGN** **P33KA00BGN**	
P31	Lubricator - Metal Bowl Without Sight Gauge, No Drain	**P31KB00BMN**	
P32	Lubricator - Metal Bowl With Sight Gauge, No Drain	**P32KB00BSN**	
P33	Lubricator - Metal Bowl With Sight Gauge, No Drain	**P33KA00BSN**	

Tel: +45 63 12 83 00 | Email: ps@hymatik.com | www.hymatik.com | Hvidkaervej 27a, DK-5250 Odense SV, Denmark

- Compact body ported units.
- Port size G1/4
- Unique deflector plate ensuring maximum water and particulate removal.
- Solid control piston with lip seal for extended life.
- Proportional oil delivery over a wide range of air flows.
- Tamperproof options available.



Operating information

Working pressure:	Max 10 bar
Working temperature:	-10 °C to +52 °C

Flow characteristics

Flow dm^3/s	1/4
Filter	30.5
Coalescing Filter	5.9
Adsorber Filter	5.9
Regulator	12.9
Regulator - Brass	9.8
Filter Regulator	9.2
Lubricator	23.3

Filters

Port size	Description	Order Code
G1/4	Poly bowl - Manual drain - 5µ	**P3LFA12EPPN**
G1/4	Poly bowl - Pulse drain - 5µ	**P3LFA12EPSN**
G1/4	Poly bowl - Manual drain - 40µ	**P3LFA12GPPN**
G1/4	Poly bowl - Pulse drain - 40µ	**P3LFA12GPSN**
Individual mounting bracket - P3LFA / P3LLA		**P3LKA00MW**

Regulators - 2 & 4 bar - relieving type & non relieving type

Port size	Description	Order Code
G1/4	8 bar relieving	**P3LRA12BNNP**
G1/4	8 bar relieving + gauge	**P3LRA12BNGP**
G1/4	8 bar relieving + Tamperproof	**P3LRA12BANP**
G1/4	8 bar relieving + gauge - Tamperproof	**P3LRA12BAGP**

Regulators (Brass) - 2, 4 &16 bar-relieving type & non relieving type

Port size	Description	Order Code
G1/4	8 bar relieving	**P3LRX12BNNP**
G1/4	8 bar relieving + gauge	**P3LRX12BNGP**
G1/4	16 bar relieving	**P3LRX12BNHP**
G1/4	8 bar relieving + Tamperproof	**P3LRX12BANP**
G1/4	8 bar relieving + gauge - Tamperproof	**P3LRX12BAGP**
G1/4	16 bar relieving + Tamperproof	**P3LRX12BAHP**

Pressure Gauges

40mm (1 1/2") Round 1/8" center back mount

		Order Code
0-30 PSIG / 0-2 bar	(2)	**KZ8810-00**
0-58 PSIG / 0-4 bar	(4)	**KZ8811-00**
0-160 PSIG / 0-10 bar	(10)	**KZ8813-00**

Coalescing Filters - 0.01µ element

Port size	Description	Order Code
G1/4	Poly bowl - Manual drain - 0.01µ	**P3LFA12CPPN**
Individual mounting bracket - P3LFA / P3LLA		**P3LKA00MW**

Adsorber Filters

Port size	Description	Order Code
G1/4	Poly bowl - Adsorber	**P3LFA12APPN**

Filter/Regulators - 2 & 4 bar pressure, 40µ available

Port size	Description	Order Code
G1/4	8 bar relieving - Poly bowl Manual drain - 5µ	**P3LEA12EPPBNNP**
G1/4	8 bar relieving - Poly bowl Semi auto-drain - 5µ	**P3LEA12EPSBNNP**
G1/4	8 bar relieving - Poly bowl Manual drain + Gauge - 5µ	**P3LEA12EPPBNGP**
G1/4	8 bar relieving - Poly bowl Semi auto-drain + Gauge - 5µ	**P3LEA12EPSBNGP**

Lubricators

Port size	Description	Order Code
G1/4	Poly bowl - No drain	**P3LLA12LPNN**
	Lubricator OIL VG32-1 Litre	**P3YKA00PPBB**

Filter/Regulator + Lubricator Combination

Available in boxed quantities of 25

Port size	Description	Order Code
G1/4	Manual push drain	**P3LCA12PEPNGLNWQ25**
G1/4	Semi auto drain	**P3LCA12PESNGLNWQ25**

Tel: +45 63 12 83 00 | Email: ps@hymatik.com | www.hymatik.com | Hvidkaervej 27a, DK-5250 Odense SV, Denmark

Dimensions (mm)

Filters

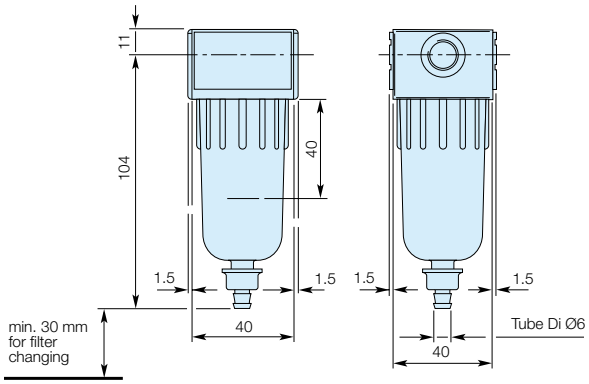

Filter/Regulators

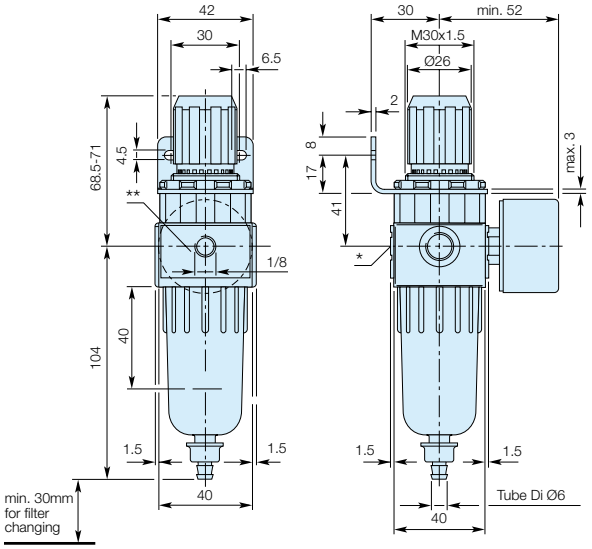

* On delivery the screw plug is not assembled
** Two opposite gauge ports 1/8"

Regulators

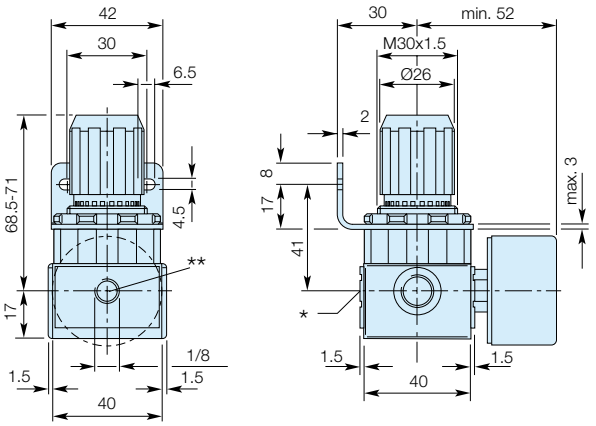

* On delivery the screw plug is not assembled
** Two opposite gauge ports 1/8"

Lubricators

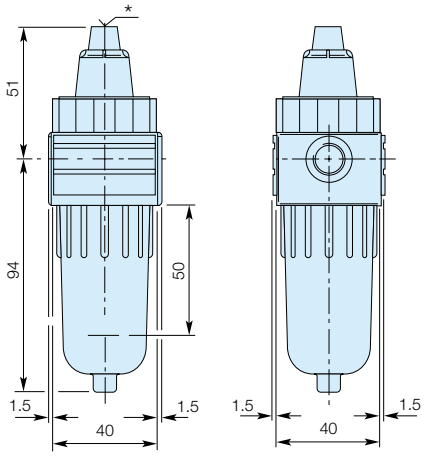

* Oil adjustment screw

Service kits

Description	Order code
Plastic bowl / manual push drain	**P3LKA00BPP**
Plastic bowl / semi-auto drain	**P3LKA00BPS**
Plastic bowl - no drain	**P3LKA00BPN**
5µ particle filter element	**P3LKA00ESE**
40µ Element Kit	**P3LKA00ESG**
0.01µ coalescing filter element	**P3LKA00ESC**
Activated carbon adsorber filter element	**P3LKA00ESA**

Accessories

Description	Order code
Connector kit (E/R + L/F)	**P3LKA00CB1**
Connector kit (E/R + M + L)	**P3LKA00CB2**
Connector kit (E/R + F + F)	**P3LKA00CB3**
Connector kit (F + L/F)	**P3LKA00CB4**
Manifold block	**P3LMA12020C**
Mounting bracket (F/L)	**P3LKA00MW**
Panel mount nut - Aluminium	**P3LKA00MM**
Panel mount nut - Plastic	**P3LKA00MP**
Angle Bracket (uses panel mount threads)	**P3LKA00MR**

Tel: +45 63 12 83 00 | Email: ps@hymatik.com | www.hymatik.com | Hvidkaervej 27a, DK-5250 Odense SV, Denmark

- Port size G1/4 - G3/8
- Modular air preparation series
- Robust and lightweight zinc body construction
- Rolling diaphragm for extended life
- Soft start valve for slow pressure build up in pneumatic circuits
- Dump valves for quick downstream pressure exhaust
- Tamperproof regulator options available
- Secondary pressure ranges 4, 8 and 16 bar



Operating information

Working pressure:	Max 16 bar
Working temperature:	0 °C to +50 °C

* Low temperature capabilities -40°C for Filters, Filter/Regulators and Regulators on request.

Flow characteristics

Flow m^3/h	1/4	3/8
Filter + Regulator + Lubricator	50	47
Filter-Regulator + Lubricator	53	47
Filter-Water-Separator	86	91
Dust Filter	80	97
Coalescing Filter	35	35
Adsorber Filter	35	35
Regulator	171	198
Filter Regulator	137	192
Lubricator	110	113

Filters

5 micron (40 micron options available)

Port size	Description	Order Code
G1/4	Standard with 5µ element	**P3SFA12EPPN**
G1/4	Semi auto drain 5µ element	**P3SFA12EPSN**
G1/4	Auto drain 5µ element	**P3SFA12EPAN**
G1/4	Metal bowl with sight glass 5µ element	**P3SFA12ESPN**
G3/8	Standard with 5µ element	**P3SFA13EPPN**
G3/8	Semi auto drain 5µ element	**P3SFA13EPSN**
G3/8	Auto drain 5µ element	**P3SFA13EPAN**
G3/8	Metal bowl with sight glass 5µ element	**P3SFA13ESPN**

Regulators

4, 8 & 16 bar (non relieving options available)

Port size	Description	Order Code
G1/4	Standard 8 bar	**P3SRA12BNNP**
G1/4	Standard 8 bar with Gauge	**P3SRA12BNGP**
G1/4	With adaptor for key lock	**P3SRA12BANP**
G1/4	With common p1 supply	**P3SHA12BNNP**
G1/4	Pilot operated	**P3SRA12BPPP**
G3/8	Standard 8 bar	**P3SRA13BNNP**
G3/8	Standard 8 bar with Gauge	**P3SRA13BNGP**
G3/8	With adaptor for key lock	**P3SRA13BANP**
G3/8	With common p1 supply	**P3SHA13BNNP**
G3/8	Pilot operated	**P3SRA13BPPP**

Coalescing Filters

0,01 micron element

Port size	Description	Order Code
G1/4	Standard with manual drain	**P3SFA12CPPN**
G1/4	Metal bowl with sight glass	**P3SFA12CSPN**
G3/8	Standard with manual drain	**P3SFA13CPPN**
G3/8	Metal bowl with sight glass	**P3SFA13CSPN**

Adsorber Filters

Port size	Description	Order Code
G1/4	Standard with manual drain	**P3SFA12APPN**
G1/4	Metal bowl with sight glass	**P3SFA12ASPN**
G3/8	Standard with manual drain	**P3SFA13APPN**
G3/8	Metal bowl with sight glass	**P3SFA13ASPN**

Lubricators

Port size	Description	Order Code
G1/4	Standard	**P3SLA12LPNN**
G1/4	Closed metal bowl with sight glass	**P3SLA12LSNN**
G3/8	Standard	**P3SLA13LPNN**
G3/8	Closed metal bowl with sight glass	**P3SLA13LSNN**

Tel: +45 63 12 83 00 | Email: ps@hymatik.com | www.hymatik.com | Hvidkaervej 27a, DK-5250 Odense SV, Denmark

Filter + Regulator + Lubricator combination
(wall bracket mount and gauge included)

Port size	Description	Order Code
G1/4	Standard with 5µ element, manual drain	**P3SCB12PEPNGLNW**
G1/4	Semi auto drain 5µ element, manual drain	**P3SCB12PESNGLNW**
G1/4	Auto drain 5µ element, manual drain	**P3SCB12PEANGLNW**
G3/8	Standard with 5µ element, manual drain	**P3SCB13PEPNGLNW**
G3/8	Semi auto drain 5µ element, manual drain	**P3SCB13PESNGLNW**
G3/8	Auto drain 5µ element, manual drain	**P3SCB13PEANGLNW**

Filter/Regulators
4, 8 & 16 bar (40 micron options available)

Port size	Description	Order Code
G1/4	Standard with 5µ element	**P3SEA12EPPBNNN**
G1/4	Semi auto drain 5µ element	**P3SEA12EPSBNNN**
G1/4	Auto drain 5µ element	**P3SEA12EPABNNN**
G1/4	Metal bowl with sight glass 5µ element	**P3SEA12ESPNGLNW**
G3/8	Standard with 5µ element	**P3SEA13EPPBNNN**
G3/8	Semi auto drain 5µ element	**P3SEA13EPSBNNN**
G3/8	Auto drain 5µ element	**P3SEA13EPABNNN**
G3/8	Metal bowl with sight glass 5µ element	**P3SEA13ESPNGLNW**

Proportional Pressure Regulator

Port size	Description	Order Code
G1/4	Normally closed, Control Signal 0-10V Pressure Range 0-10 bar	**P3SPA12AD2VA2A**
G1/4	Normally closed, Control Signal 4-20mA Pressure Range 0-10 bar	**P3SPA12AD2AA2A**
G1/4	Normally open / fail safe Control Signal 0-10V Pressure Range 0-10 bar	**P3SPA12ED2VA2A**
G1/4	Normally open / fail safe Control Signal 4-20mA Pressure Range 0-10 bar	**P3SPA12ED2AA2A**
G3/8	Normally closed, Control Signal 0-10V Pressure Range 0-10 bar	**P3SPA13AD2VA2A**
G3/8	Normally closed, Control Signal 4-20mA Pressure Range 0-10 bar	**P3SPA13AD2AA2A**
G3/8	Normally open / fail safe Control Signal 0-10V Pressure Range 0-10 bar	**P3SPA13ED2VA2A**
G3/8	Normally open / fail safe Control Signal 4-20mA Pressure Range 0-10 bar	**P3SPA13ED2AA2A**

Filter/Regulator + Lubricator combination
(wall bracket mount and gauge included)

Port size	Description	Order Code
G1/4	Standard with 5µ element, manual drain	**P3SCA12PEPNGLNW**
G1/4	Semi auto drain 5µ element	**P3SCA12PESNGLNW**
G1/4	Auto drain 5µ element	**P3SCA12PEANGLNW**
G1/4	Metal bowl with sight glass 5µ element	**P3SCA12SEPNGLNW**
G3/8	Standard with 5µ element, manual drain	**P3SCA13PEPNGLNW**
G3/8	Semi auto drain 5µ element	**P3SCA13PESNGLNW**
G3/8	Auto drain 5µ element	**P3SCA13PEANGLNW**
G3/8	Metal bowl with sight glass 5µ element	**P3SCA13SEPNGLNW**

Slider Valve

Port size	Description	Order Code
G1/4	3/2 way shut off valve 3-fold lockable	**P3SVA12LSN**
G3/8	3/2 way shut off valve 3-fold lockable	**P3SVA13LSN**

Soft Start Valve & Dump Valves

Port size	Description	Order Code
G1/4	Soft Start Valve	**P3SSA12Y0N**
G1/4	Dump Valve Air Pilot	**P3SDA12PPN**
G1/4	Solenoid Pilot 24V =	**P3SDA12SCNB2CN**
G1/4	Solenoid Operated (solenoid not included)	**P3SDA12SCN0000**
G3/8	Soft Start Valve	**P3SSA13Y0N**
G3/8	Dump Valve Air Pilot	**P3SDA13PPN**
G3/8	Solenoid Pilot 24V =	**P3SDA13SCNB2CN**
G3/8	Solenoid Operated (solenoid not included)	**P3SDA13SCN0000**

Accessories

Description	Order Code
Wall Mount Kit - standard	**P3SKA00MW**
Wall Mount Kit for common p1 regulator	**P3SKA00MB**
Assembly Kit	**P3SKA00CB**
Branch manifold, 3 x G1/8, 1 x G1/4 for pressure switch incl. assembly material	**P3SMA1V0N**
Gauge Ø 40, 0-10 bar, G1/8	**KZ8813-00**
Lock for tamperproof regulator	**P3XKA00AS**

Tel: +45 63 12 83 00 | Email: ps@hymatik.com | www.hymatik.com | Hvidkaervej 27a, DK-5250 Odense SV, Denmark

Dimensions (mm)

Filter + Regulator + Lubricator combination

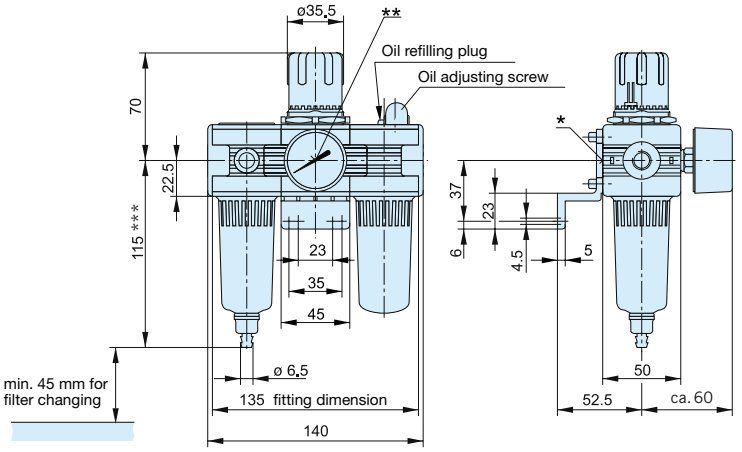

* On delivery the plug screw is not assembled
** Two opposite gauge ports G1/8
*** 148 mm on version with automatic drainage

Filter/Regulator + Lubricator combination

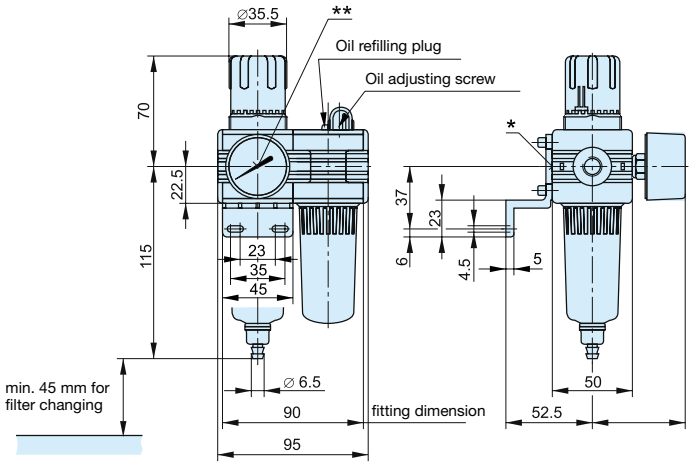

* On delivery the plug screw is not assembled
** Two opposite gauge ports G1/8
*** 148 mm on version with automatic drainage

Filter/Regulator

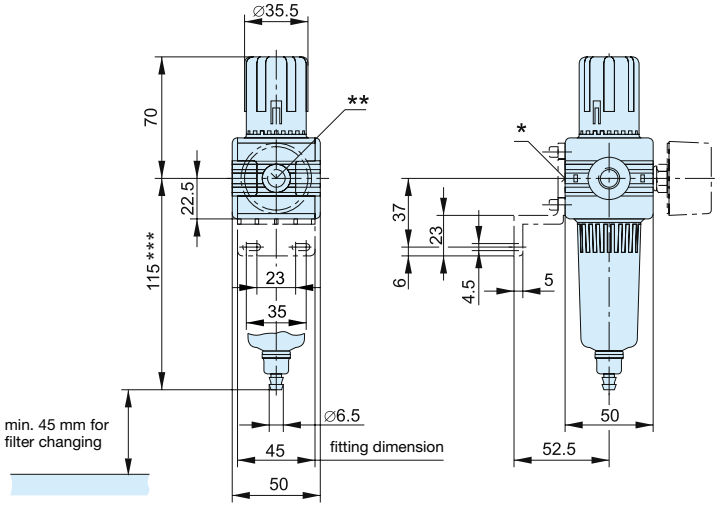

Parker Hannifin Corporation
Pneumatic Division - Europe

Tel: +45 63 12 83 00 | Email: ps@hymatik.com | www.hymatik.com | Hvidkaervej 27a, DK-5250 Odense SV, Denmark

Dimensions (mm)

Filter

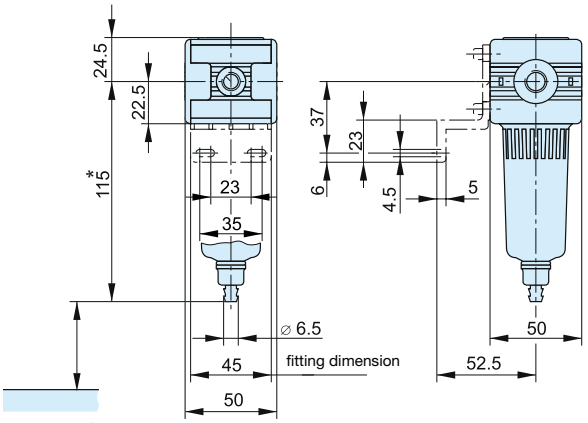

min. 60 mm for filter changing

* 148 mm on Automatic drain version

Regulator

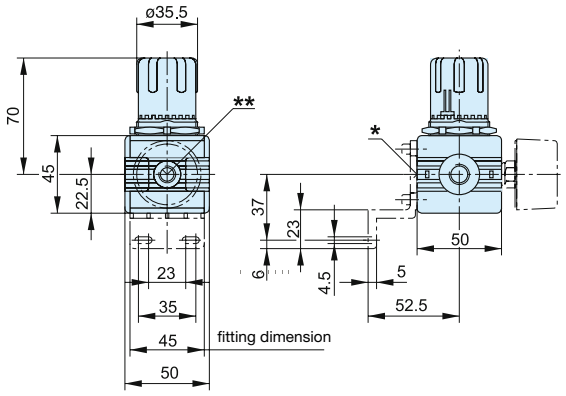

* On delivery the plug screw is not assembled
** Two opposite gauge ports G1/8
*** For self-tapping screw M4, DIN 7500, maximum screw depth: 10 mm

Lubricator

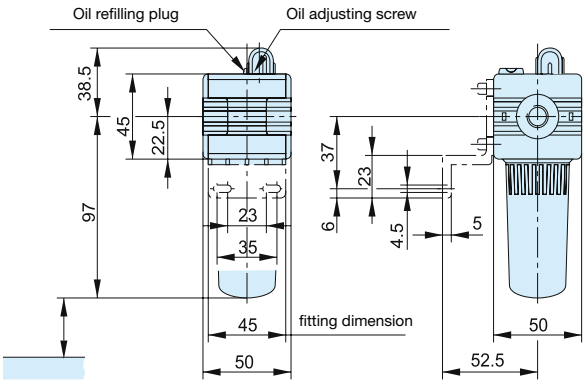

min. 45 mm for filter changing

Common - P1 Regulator

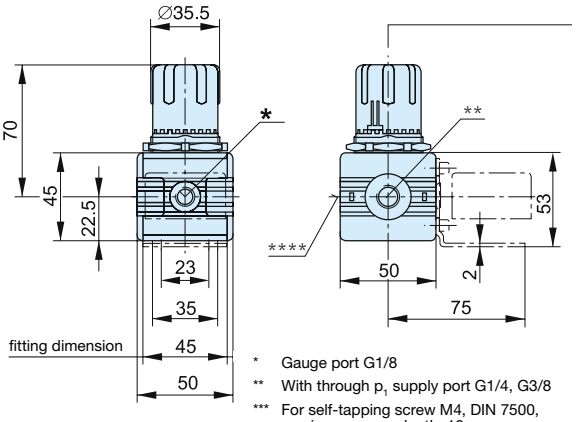

* Gauge port G1/8
** With through p_1 supply port G1/4, G3/8
*** For self-tapping screw M4, DIN 7500, maximum screw depth: 10 mm
**** p_2 port G1/4

Pilot Operated Regulator

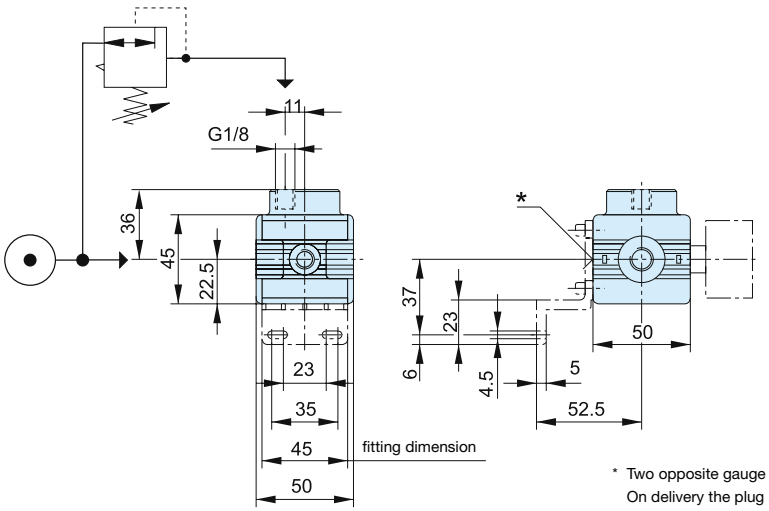

* Two opposite gauge ports G1/8
On delivery the plug screw is not assembled

Tel: +45 63 12 83 00 | Email: ps@hymatik.com | www.hymatik.com | Hvidkaervej 27a, DK-5250 Odense SV, Denmark

Dimensions (mm)

Start Valve

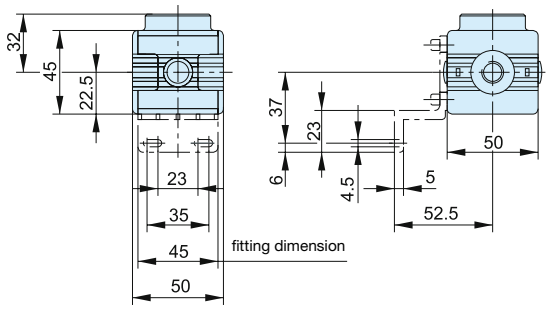

Slider Valve

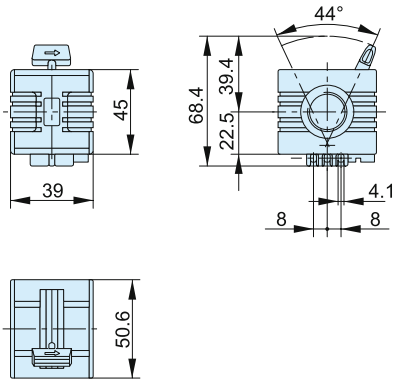

Remote Operated Dump Valve (electrically actuated)

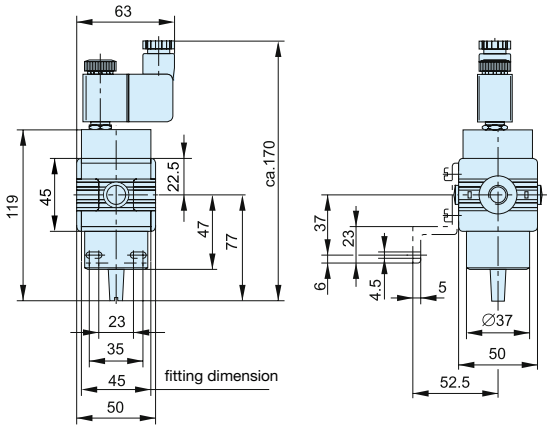

Remote Operated Dump Valve (pneumatically actuated)

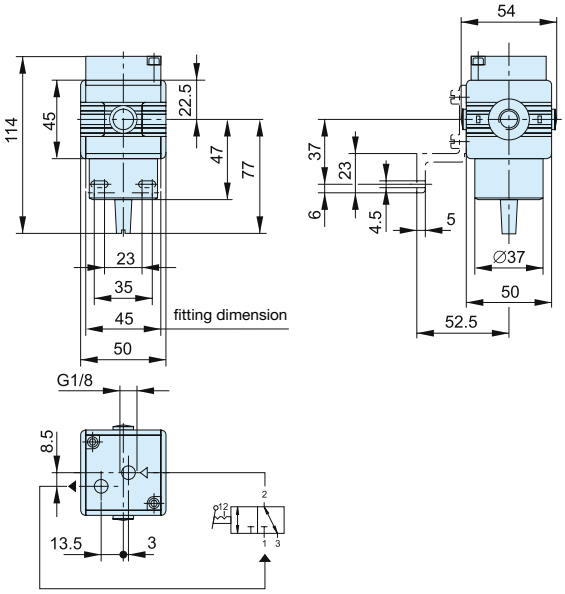

Branch Manifold

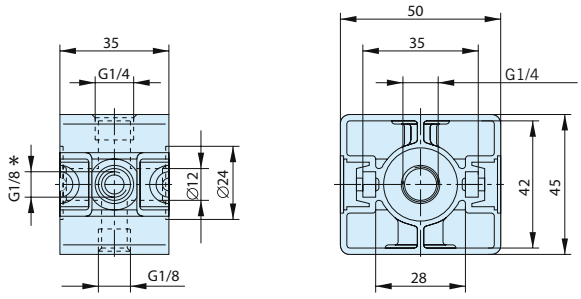

* G1/8 thread on both sides

Parker Hannifin Corporation
Pneumatic Division - Europe

Tel: +45 63 12 83 00 | Email: ps@hymatik.com | www.hymatik.com | Hvidkaervej 27a, DK-5250 Odense SV, Denmark



Nano Mist

Simple. Convincing in the Details

There are innovations that bring selective improvements.
And then there are real innovations.
*Innovations that set **new** standards.*
*Like the **new Parker Moduflex Lite** series.*



New Nano Mist Technology, New Lubricator Concept. Self-Adjusting.

With conventional lubricators, only the oil volume per time unit can be adjusted. If the demand changes, the quantity dispensed still remains constant.

The Moduflex Lite lubricator concept sets new benchmarks here. For the first time, the oil volume is automatically adjusted to the flow rate.

This ensures that there is neither too little nor too much oil in the system, which leads to clear economic and ecological advantages. In addition, with conventional systems, the distance between the lubricator and the equipment has to be less than 8 meters. With larger distances, the dispensed oil is deposited as a wall flow.
The new lubricator principle of the Moduflex Lite allows for distances of up to 40 meters. This opens up new scope for the design of even more efficient production systems.

Parker Hannifin Corporation
Pneumatic Division - Europe

Tel: +45 63 12 83 00 | Email: ps@hymatik.com | www.hymatik.com | Hvidkaervej 27a, DK-5250 Odense SV, Denmark

Popular Combinations

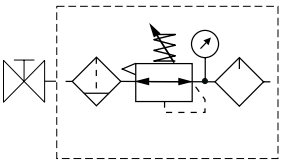



Slide Valve + Filter/Regulator + Lubricator Combinations (50mg/m³)
5 micron element, 8 bar Regulator + Gauge and Wall Mounting Brackets

Port size	Combined Manual/Semi-Auto Drain	Flow dm³/s	Weight (g)	Auto Drain	Flow dm³/s	Weight (g)
G1/2	**P3XAA14GECNGPNW**	76	1300	**P3XAA14GEANGPNW**	76	1300
G3/4	**P3XAA16GECNGPNW**	77	1300	**P3XAA16GEANGPNW**	77	1300

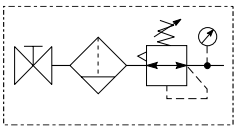



Slide Valve + Filter/Regulator Combinations
5 micron element, 8 bar Regulator + Gauge and Wall Mounting Brackets

Port size	Combined Manual/Semi-Auto Drain	Flow dm³/s	Weight (g)	Auto Drain	Flow dm³/s	Weight (g)
G1/2	**P3XAN14GECNGW**	105	950	**P3XAN14GEANGW**	105	950
G3/4	**P3XAN16GECNGW**	106	950	**P3XAN16GEANGW**	106	950

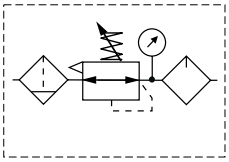



Filter/Regulator + Lubricator Combinations (50mg/m³)
5 micron element, 8 bar Regulator + Gauge and Wall Mounting Brackets

Port size	Combined Manual/Semi-Auto Drain	Flow dm³/s	Weight (g)	Auto Drain	Flow dm³/s	Weight (g)
G1/2	**P3XCA14GECNGPNW**	76	1000	**P3XCA14GEANGPNW**	76	1000
G3/4	**P3XCA16GECNGPNW**	77	1000	**P3XCA16GEANGPNW**	77	1000

Options:

P 3 X [ ] [ ] **G E** [ ] [ ] [ ] **W**

Filter/Reg + Lubricator	**CA**
Slide valve + Filter/Reg	**AN**
Slide valve + Filter/Reg + Lubricator	**AA**

BSPP (G)	**1**
NPT *	**9**

Combined Manual/Semi Auto Drain	**C**
Auto Drain	**A**

0 - 8 bar with gauge	**G**
0 - 16 bar with gauge	**J**

* NPT ports on request 1/2" size only

1/2	**4**
3/4	**6**

Non rise - Standard	**N**
Tamperproof - Lockable	**A**

(50mg/m³)	**PN**	Add only for options with lubricator
(5mg/m³)	**SN**	

Tel: +45 63 12 83 00 | Email: ps@hymatik.com | www.hymatik.com | Hvidkaervej 27a, DK-5250 Odense SV, Denmark

- Integral 1/2 or 3/4 ports
- High efficiency 5 micron element as standard
- Excellent water removal efficiency
- Secondary pressure ranges 4, 8 and 16 bar
- Rolling diaphragm for extended life
- Secondary aspiration plus balanced poppet provides quick response and accurate pressure regulation.
- Low temperature -40'C with Regulators/Filters and Filter Regulators using combined manual/semi auto drain as standard without pressure gauge.



Operating information

Working pressure:	Max 16 bar
Working temperature:	-40 °C to +60 °C

Flow characteristics

Flow dm^3/s	1/2	3/4
Filter	55	57
Coalescing Filter	24	24
Adsorber Filter	18	18
Regulator	122	134
Filter Regulator	111	113
Lubricator	78	78

Filters - 5 micron element

Port size	Description	Order Code
G1/2	Manual drain/Semi auto	**P3XFA14EGCN**
G1/2	Auto drain	**P3XFA14EGAN**
G3/4	Manual drain / Semi auto	**P3XFA16EGCN**
G3/4	Auto drain	**P3XFA16EGAN**
	Mounting bracket	**P3XKA00MW**

Regulators - 4 & 8 bar - non relieving options available

Port size	Description	Order Code
G1/2	8 bar relieving	**P3XRA14BNNN**
G1/2	8 bar relieving + gauge	**P3XRA14BNGN**
G3/4	8 bar relieving	**P3XRA16BNNN**
G3/4	8 bar relieving + gauge	**P3XRA16BNGN**
G1/2	8 bar relieving, tamperproof	**P3XRA14BANN**
G1/2	8 bar relieving, tamperproof + gauge	**P3XRA14BAGN**
G3/4	8 bar relieving, tamperproof	**P3XRA16BANN**
G3/4	8 bar relieving, tamperproof + gauge	**P3XRA16BAGN**
G1/2	Air-pilot regulator	**P3XRA14BPPN**
G3/4	Air-pilot regulator	**P3XRA16BPPN**

Lubricators

Port size	Description	Order Code
G1/2	Oil mist, fill under pressure (50mg/m^3)	**P3XLA14PGNN**
G3/4	Oil mist, fill under pressure (50mg/m^3)	**P3XLA16PGNN**
G1/2	Oil mist, fill under pressure (5mg/m^3)	**P3XLA14SGNN**
G3/4	Oil mist, fill under pressure (5mg/m^3)	**P3XLA16SGNN**
	Lubricator OIL VG15:ISO3448 - 100ml	**P3XKA00PPA**
	Lubricator OIL VG32-1 Litre	**P3YKA00PPBB**

Coalescing Filters - 0.01 micron element

Port size	Description	Order Code
G1/2	Coalescing 0.01µm, manual/semi auto drain	**P3XFA14DGCN**
G1/2	Coalescing Filter 0.01µm, auto drain	**P3XFA14DGAN**
G3/4	Coalescing 0.01µm, manual/semi auto drain	**P3XFA16DGCN**
G3/4	Coalescing Filter 0.01µm, auto drain	**P3XFA16DGAN**

Adsorber Filters

Port size	Description	Order Code
G1/2	Adsorber, manual/semi auto drain	**P3XFA14AGCN**
G3/4	Adsorber, manual/semi auto drain	**P3XFA16AGCN**

Filter/Regulators

4 and 16 bar, non relieving options available

Port size	Description	Order Code
G1/2	8 bar, relieving manual/semi auto drain	**P3XEA14EGCBNNN**
G1/2	8 bar, relieving auto drain	**P3XEA14EGABNNN**
G1/2	8 bar, relieving manual/semi auto + gauge	**P3XEA14EGCBNGN**
G1/2	8 bar, relieving auto drain + gauge	**P3XEA14EGABNGN**
G3/4	8 bar, relieving manual/semi auto drain	**P3XEA16EGCBNNN**
G3/4	8 bar, relieving auto drain	**P3XEA16EGABNNN**
G3/4	8 bar, relieving manual/semi auto + gauge	**P3XEA16EGCBNGN**
G3/4	8 bar, relieving auto drain + gauge	**P3XEA16EGABNGN**

Pressure Gauges

	Order Code
0 - 10 bar	**KG8012-00**
0 - 16 bar	**KG8013-00**

Tel: +45 63 12 83 00 | Email: ps@hymatik.com | www.hymatik.com | Hvidkaervej 27a, DK-5250 Odense SV, Denmark

Dump Valve & Combined Soft Start Dump Valve



Symbols

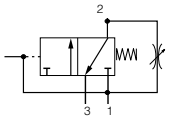

- Modular design with 1/2" & 3/4" integral ports (BSPP or NPT)
- Provides for the safe introduction of pressure
- Automatically dumps downstream pressure on the loss of pilot signal
- Adjustable slow start
- Solenoid or air pilot options
- High flow & exhaust capability

P3X Series Combined Soft Start/Dump Valves, provide for the safe introduction of pressure to machines or systems. Soft Start/Dump Valves when set, allow the pressure to gradually build to the set point before fully opening to deliver full flow at line pressure.

The controlled introduction of pressure can be an important safety factor and prevent damage to tooling when air pressure is introduced at machine or system start up.

Options:

P 3 X [ ] **A** [ ] [ ] [ ] [ ] **N** [ ] [ ] [ ] [ ]

Solenoid type only

Combined soft start dump valve	**T**
Dump valve	**D**

External air pilot	**P**
Solenoid pilot	**S**

None (operator is fitted to valve)	**0**
30mm CNOMO coil (Form connection)	**A**
22mm coil (Form connection)	**B**
30mm CNOMO coil (M12 connection)	**D**
22mm coil (M12 connection)	**E**

Solenoid / coil not fitted	**000**
24V DC	**2CN**

BSPP (G)	**1**
NPT *	**9**

1/2	**4**
3/4	**6**

30mm operator	**C**
Threaded air pilot	**P**

* NPT Ports on request 1/2" size only

Combined soft start dump valve

Port size	Description	Order Code	Flow dm^3/s	Max bar	Min temp °C	Max temp °C	Height mm	Width mm	Depth mm	Weight kg
1/2	Solenoid operated (not included)	**P3XTA14SCN0000**	80	16	-10	60	144	62	62	0.75
1/2	24VDC 22mm coil	**P3XTA14SCNB2CN**	80	10	-10	60	174	88	62	0.75
1/2	24VDC 30mm coil	**P3XTA14SCNA2CN**	80	16	-10	60	174	88	62	0.75
1/2	Air pilot operated	**P3XTA14PPN**	80	16	-10	60	127.5	62	62	0.75
3/4	Solenoid operated (not included)	**P3XTA16SCN0000**	88	16	-10	60	144	62	62	0.75
3/4	24VDC 22mm coil	**P3XTA16SCNB2CN**	88	10	-10	60	174	88	62	0.75
3/4	24VDC 30mm coil	**P3XTA16SCNA2CN**	88	16	-10	60	174	88	62	0.75
3/4	Air pilot operated	**P3XTA16PPN**	88	16	-10	60	127.5	62	62	0.75

Tel: +45 63 12 83 00 | Email: ps@hymatik.com | www.hymatik.com | Hvidkaervej 27a, DK-5250 Odense SV, Denmark

Dimensions (mm)

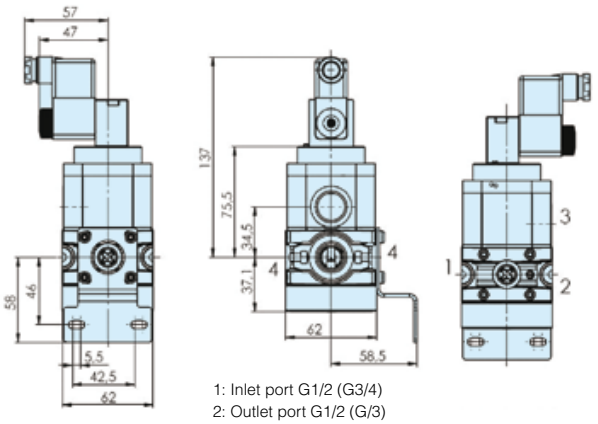

1: Inlet port G1/2 (G3/4)
2: Outlet port G1/2 (G/3)
3: Exhaust port G1/2
4: Gauge port G1/4

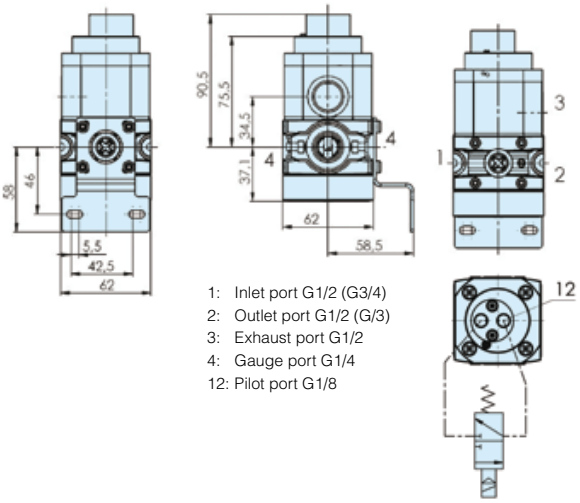

1: Inlet port G1/2 (G3/4)
2: Outlet port G1/2 (G/3)
3: Exhaust port G1/2
4: Gauge port G1/4
12: Pilot port G1/8

Modular Slide Valve

P3X	VA			LSN
	BSPP (G) 1		G1/2 4	
	NPT * 9		G3/4 6	

* NPT ports on request (1/2" size only)

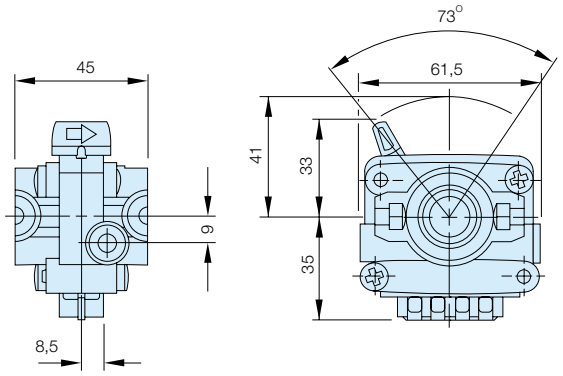

Modular Manifold

Description	Order code BSPP	Order code NPT	Weight (g)
G1/2"	**P3XMA1V0N**	**P3XMA9V0N**	170
G3/4"	**P3XMA160N**		170

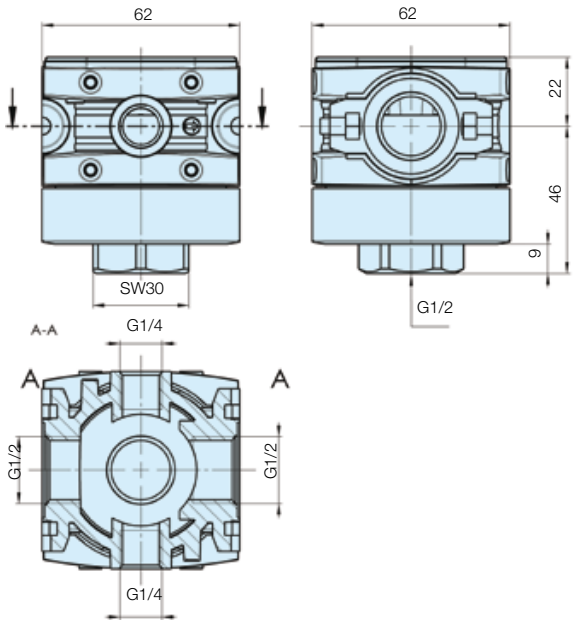

Parker Hannifin Corporation
Pneumatic Division - Europe

Tel: +45 63 12 83 00 | Email: ps@hymatik.com | www.hymatik.com | Hvidkaervej 27a, DK-5250 Odense SV, Denmark

Dimensions (mm)

Filters

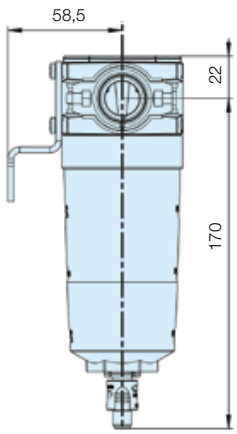

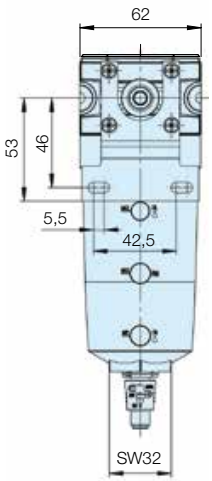

Filter/Regulators

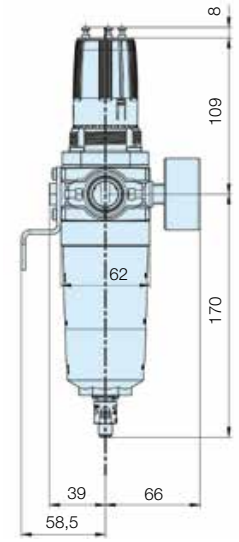

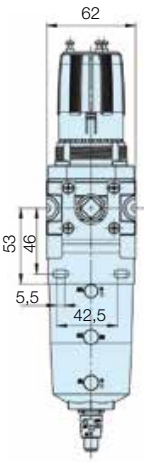

Regulators

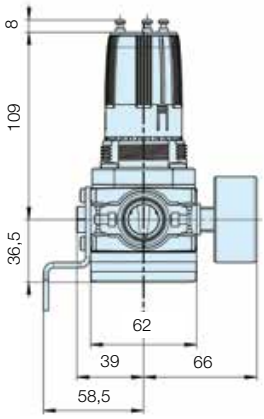

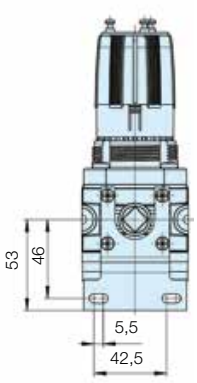

Lubricators

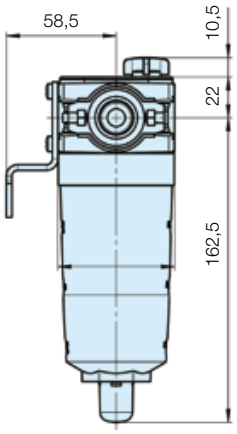

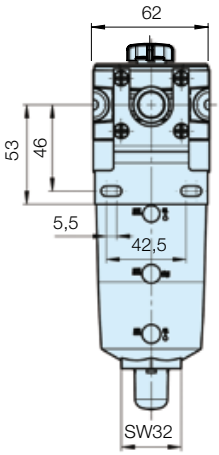

Service kits

Description	Order code
Adsorber element kit	**P3XKA00ESA**
0.01 micron element kit	**P3XKA00ESC**
1 micron element kit	**P3XKA00ES9**
5 micron element kit	**P3XKA00ESE**
40 micron element kit	**P3XKA00ESG**
Bowl kit with combined manual/semi auto drain	**P3XKA00BSC**
Bowl kit with auto drain	**P3XKA00BSA**
Diaphragm kit (relieving type)	**P3XKA00RR**
Diaphragm kit (non-relieving type)	**P3XKA00RN**
Connecting kit	**P3XKA00CB**

Accessories

Description	Order code
Connector kit	**P3XKA00CB**
Connector O'ring kit (5)	**P3XKA04CY**
Tamper-proof knob kit (keylock)	**P3XKA00AS**
Wall bracket kit	**P3XKA00MW**
Panel mount nut	**P3XKA00MM**

Tel: +45 63 12 83 00 | Email: ps@hymatik.com | www.hymatik.com | Hvidkaervej 27a, DK-5250 Odense SV, Denmark

- Removes water vapour & lowers the PDP
- Compact design
- No electrical connections necessary
- Suitable for hazardous environments
- No moving parts
- Maintenance & wear free
- No change in air consumption
- Low pressure drop less than 0.1 bar
- Minimal purge air consumption
- Modular design - compatible with the P3X air prep series



Operating information

Operating pressure range:	5 to 16 bar
Temperature range:	2 °C to 60 °C
Pressure drop:	0.1 bar
Purge air (at 20K PDP reduction):	10%
Max Flow at inlet (size 50):	2800 l/m

Note:
For optimum system performance and maintenance free conditions, Parker recommend the dryer is preceeded with a 5 micron and 0.01 coalescer filter from the P3X series.

Membrane dryer

Port size	Size	Description	Order Code
G1/2	10	Membrane dryer with return tube - size 10	**P3XJA14CA1N**
G1/2	15	Membrane dryer with return tube - size 15	**P3XJA14CB1N**
G1/2	20	Membrane dryer with return tube - size 20	**P3XJA14CC1N**
G1/2	25	Membrane dryer with return tube - size 25	**P3XJA14CD1N**
G1/2	35	Membrane dryer serial type - size 35	**P3XJA14CE1N**
G1/2	50	Membrane dryer serial type - size 50	**P3XJA14CF1N**



Note: For NPT threaded connections replace the 6th digit from a 1 to 9 ie: **P3XJA94CA1N**

Wall mounting bracket kit

Order Code
P3XKA00MWD

Note:
For optimum system performance and maintenance free conditions, Parker recommend the dryer is proceeded with a 5 micron and 0.01 coalecer filter from the P3X series.

Complete Filter / Dryer System combinations available on request



F + Fc + MD



F + Fc + MD + R



F + Fc + MD + R + Fa

Parker Hannifin Corporation
Pneumatic Division - Europe

Tel: +45 63 12 83 00 | Email: ps@hymatik.com | www.hymatik.com | Hvidkaervej 27a, DK-5250 Odense SV, Denmark

Selection Criteria

To correctly slect the dryer best suited for your application, the following information is required to ensure optimum performance and trouble free operation.

- Maximum inlet pressure dew point (^{O}C)
- Outlet PDP (^{O}C)
- Working pressure (bar)
- Maximum inlet flow rate (m^3/h)

Conversion factor for calculation of corrected flow rate

Operating pressure range p (bar)	5	6	7	8	9	10	11	12	13	14	15	16
Conversion factor f_p	0.57	0.78	1.0	1.21	1.42	1.64	1.85	2.06	2.28	2.49	2.70	2.92

Working Example:

Selecting a dryer with an inlet pressure dew point of 35°C, a PDP reduction of 35K with a working / operating pressure of 6 bar and an inlet flow of 11 m^3/h.

Step 1
From the correction factor table select the required pressure (6 bar) and read below the corrected factor value (0.78)

Step 2
To adjust the flow for your application, divide the required flow by the 0.78 correction factor

$$\text{Sizing capacity} = \frac{\text{Actual flow}}{\text{Correction factor}} \qquad \frac{11\ m^3/h}{0.78} \qquad = \qquad 14.1\ m^3/h$$

Step 3
Plot the values on the selection graph (below). Where the dew point reduction value of 35K intersects with the corrected flow value of 14.1 m^3/h, select the dryer flow curve which is equal or above the intersection point. For example: the optimum dryer would be **size 25 (P3XJA14CD1N)**

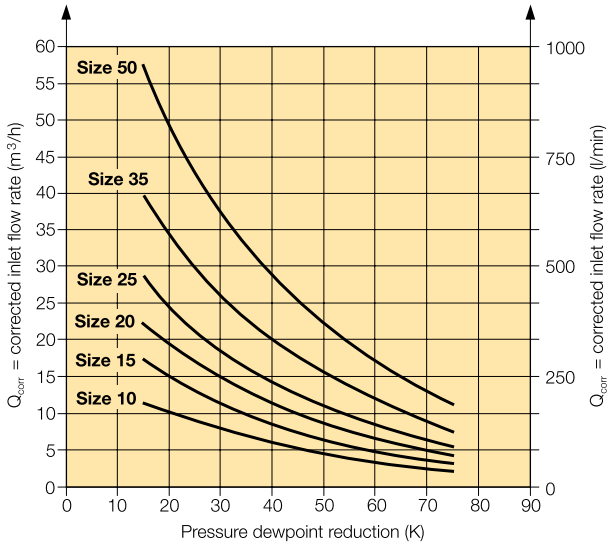

Tel: +45 63 12 83 00 | Email: ps@hymatik.com | www.hymatik.com | Hvidkaervej 27a, DK-5250 Odense SV, Denmark

For the most demanding hi-flow industrial applications

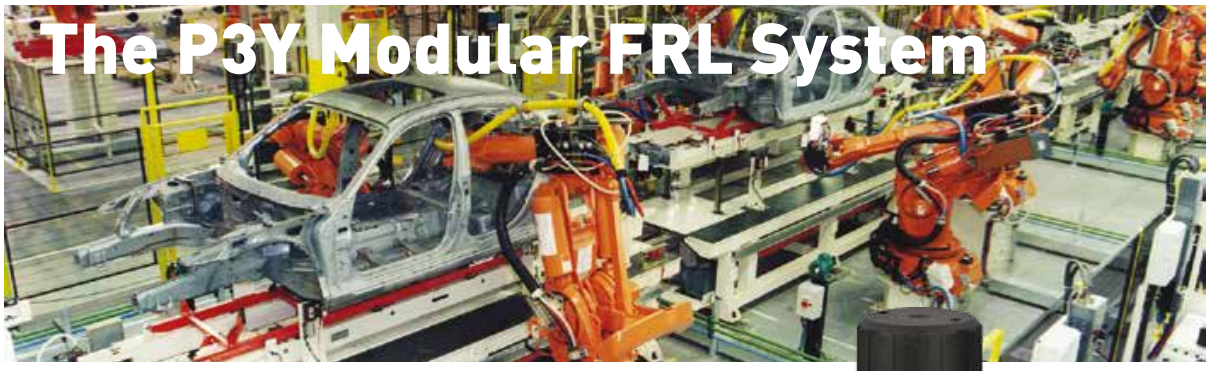

The P3Y system allows units to be connected together, without the use of pipe connectors, saving space; providing constant mounting centres; whilst maintaining a modern aesthetically pleasing appearance.

The P3Y Filters are specially designed to efficiently filter out rust, dirt, moisture and other impurities from compressed air lines. Operation is fully automatic with a minimum of pressure drop. Coalescing filters and adsorber filters for high purity air are also included in the P3Y series.

The P3Y Regulators are designed to provide quick response and accurate pressure regulation for the most demanding hi-flow industrial applications.
The rolling diaphragm was designed for long trouble-free operation and will not rupture or tear under high cycle or other demanding applications.



Selection of Filters



Standard Filter **Coalescing Filter**



Adsorber Filter **Dust Filter**

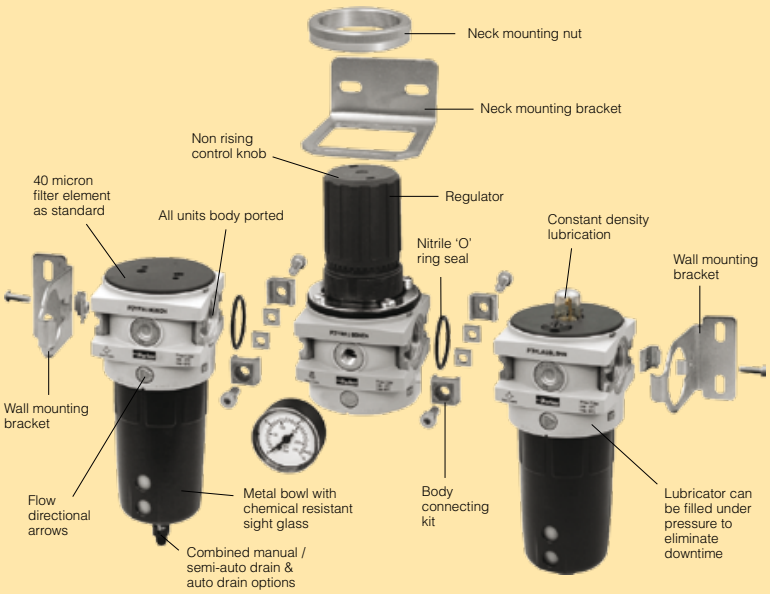

Tel: +45 63 12 83 00 | Email: ps@hymatik.com | www.hymatik.com | Hvidkaervej 27a, DK-5250 Odense SV, Denmark

DECLARATION

We **Parker Hannifin Manufacturing Austria GmbH**
Pneumatic Division
Dr. Alexander Schärfstrasse 12
2700 Wiener Neustadt
Austria

Product	**Series**	**Category**
Filter	P3YFA	for zone 1, 21
Regulator	P3YRA	for zone 1, 21
Filter regulator	P3YEA	for zone 1, 21
Lubricator	P3YLA	for zone 1, 21
Ball Valve	P3YVA	for zone 1, 21
Manifold	P3YMA	for zone 1, 21
For non-fitted solenoid product		
Soft Start & Dump Valve	P3YTA	for zone 1, 21
Soft Start Valve	P3YSA	for zone 1, 21
Dump Valve	P3YDA	for zone 1, 21

Following Ignition Hazard Assessments performed on the non-electrical products listed above, in accordance with the requirements of EN 13463-1:2009, it was considered that the equipment does not contain its own source of ignition, and therefore is not within the scope of directive 94/9/EC.

The products can be used in a Group II Category 2 environment assuming that the ATEX Directive and the following conditions are complied with:

- Installation and maintenance of the product must be undertaken by qualified personnel.
- Do not mount the products in an area where impact may occur.
- Filters must be used to limit the introduction of particles and to capture particles generated in service.
- Supply air quality must be within ISO 8573-1:2010 Class 1.4.2.
- Maximum working temperature to be as stated on product label.
- WARNING – pulsating pressure and/or a closed circuit can generate heat.
- Deposits of dust on the product must not exceed 5mm thickness.
  Refer to technical file for surface areas of plastics.
  The unit must be earthed via the compressed air supply line.
- The unit must not come into contact with liquid solvents, acids or alkalis.
  Refer to technical file for chemicals known to be incompatible.
  Product cleaning must be undertaken using a method complying with the specification of the ATEX zone, preferably by using mild soap and water or antistatic products.
- **Regulators, Filter Regulators:**
  Do not use Regulators or Filter Regulators within systems that can create vibration within the Regulator/Filter Regulator unit.
- **Solenoid Operated Valves:**
  Are suitable for use in an ATEX environment, (Group II Category 2) providing ATEX approved solenoids are fitted.
- Technical file available on request.

Approved by:

E. Bauregger (Location Engineering Manager)

Tel: +45 63 12 83 00 | Email: ps@hymatik.com | www.hymatik.com | Hvidkaervej 27a, DK-5250 Odense SV, Denmark

P3Y Air Preparation System

- Integral 3/4 or 1" ports (BSPP or NPT)
- High efficiency element as standard
- Excellent water removal efficiency
- Robust but lightweight aluminium construction
- Secondary pressure ranges 12 and 16 bar
- Rolling diaphragm for extended life
- Secondary aspiration plus balanced poppet provides quick response and accurate pressure regulation.
- Low temperature -40'C with Regulators/Filters and Filter Regulators using combined manual/semi auto drain as standard without pressure gauge.



Operating information

Working pressure:	Max 17.5 bar
Working temperature:	-40 °C to +60 °C

Flow characteristics

Flow dm^3/s	3/4	1"
Filter	116	119
Dust Filter	137	145
Coalescing Filter	49	59
Adsorber Filter	47	50
Regulator	155	321
Filter Regulator	190	237
Lubricator	162	184

Filters - 40 micron element

Port size	Description	Order Code
G3/4	Manual drain/Semi auto	**P3YFA16GSCN**
G3/4	Auto drain	**P3YFA16GSAN**
G1"	Manual drain / Semi auto	**P3YFA18GSCN**
G1"	Auto drain	**P3YFA18GSAN**
	Mounting bracket	**P3YKA00CW**

Dust Filters - 1 micron element

Port size	Description	Order Code
G3/4	Manual drain/Semi auto	**P3YFA162SCN**
G3/4	Auto drain	**P3YFA162SAN**
G1"	Manual drain / Semi auto	**P3YFA182SCN**
G1"	Auto drain	**P3YFA182SAN**

Regulators - relieving type - non relieving options available

Port size	Description	Order Code
G3/4	12 bar relieving	**P3YRA16BNEN**
G3/4	12 bar relieving + gauge	**P3YRA16BNFN**
G1"	12 bar relieving	**P3YRA18BNEN**
G1"	12 bar relieving + gauge	**P3YRA18BNFN**
G3/4	12 bar relieving, lockable	**P3YRA16BAEN**
G3/4	12 bar relieving, lockable + gauge	**P3YRA16BAFN**
G1"	12 bar relieving, lockable	**P3YRA18BAEN**
G1"	12 bar relieving, lockable + gauge	**P3YRA18BAFN**

Pressure Gauges

	Order Code
0 - 10 bar	**KG8012-00**
0 - 16 bar	**KG8013-00**

Coalescing Filters - 0.01 micron element

Port size	Description	Order Code
G3/4	Coalescing 0.01µm, manual/semi auto drain	**P3YFA16DSCN**
G3/4	Coalescing Filter 0.01µm, auto drain	**P3YFA16DSAN**
G1"	Coalescing 0.01µm, manual/semi auto drain	**P3YFA18DSCN**
G1"	Coalescing Filter 0.01µm, auto drain	**P3YFA18DSAN**

Adsorber Filters

Port size	Description	Order Code
G3/4	Adsorber, manual drain	**P3YFA16ASCN**
G1"	Adsorber, manual drain	**P3YFA18ASCN**

Lubricators

Port size	Description	Order Code
G3/4	Oil mist, fill under pressure	**P3YLA16LSNN**
G1"	Oil mist, fill under pressure	**P3YLA18LSNN**

Filter/Regulators - relieving type - non relieving options available

Port size	Description	Order Code
G3/4	12 bar, relieving manual/semi auto drain	**P3YEA16GSCBNEN**
G3/4	12 bar, relieving auto drain	**P3YEA16GSABNEN**
G3/4	12 bar, relieving manual/semi auto + gauge	**P3YEA16GSCBNFN**
G3/4	12 bar, relieving auto drain + gauge	**P3YEA16GSABNFN**
G1"	12 bar, relieving manual/semi auto drain	**P3YEA18GSCBNEN**
G1"	12 bar, relieving auto drain	**P3YEA18GSABNEN**
G1"	12 bar, relieving manual/semi auto + gauge	**P3YEA18GSCBNFN**
G1"	12 bar, relieving auto drain + gauge	**P3YEA18GSABNFN**

Tel: +45 63 12 83 00 | Email: ps@hymatik.com | www.hymatik.com | Hvidkaervej 27a, DK-5250 Odense SV, Denmark

Combined Soft Start Dump Valve and Remote Operated Dump Valve

Port size	Description	Order Code
G3/4	Solenoid operated (not included)	**P3YTA16SCN0000**
G3/4	24VDC 22mm coil	**P3YTA16SCNB2CN**
G3/4	Air pilot operated	**P3YTA16PPN**
G1"	Solenoid operated (not included)	**P3YTA18SCN0000**
G1"	24VDC 22mm coil	**P3YTA18SCNB2CN**
G1"	Air pilot operated	**P3YTA18PPN**

Soft Start Valve

Port size	Description	Order Code
G3/4	Soft start valve	**P3YSA16Y0N**
G1"	Soft start valve	**P3YSA18Y0N**

Neck mounting bracket kit

Description	Order Code
Neck mounting bracket kit	**P3YKA00MS**

Wall mounting brackets

Description	Order Code
Wall mounting brackets	**P3YKA00CW**

Pilot Operated Regulator

Port size	Description	Order Code
G3/4	Pilot operated regulator	**P3YRA16BPPN**
G1"	Pilot operated regulator	**P3YRA18BPPN**

Modular Ball Valve

Port size	Description	Order Code
G3/4	Modular Ball Valve	**P3YVA16LBN**
G1"	Modular Ball Valve	**P3YVA18LBN**

Modular Manifold

Port size	Description	Width	Order Code
G3/4	Modular Manifold	(80 mm)	**P3YMA1V0N**
G1"	Modular Manifold	(80 mm)	**P3YMA9V0N**
G3/4	Modular Manifold	(35 mm)	**P3YMA16024N**

Optional Port Block Kits

Port size	Description	Order Code
G1 1/4"	Port block kit - BSPP	**P3YKA1ACP**
G1 1/2"	Port block kit - BSPP	**P3YKA1BCP**
G3/4"	Port block kit - BSPP	**P3YKA16CP**
G1"	Port block kit - BSPP	**P3YKA18CP**

Connector kit

Description	Order Code
Connector kit	**P3YKA00CB**

Tel: +45 63 12 83 00 | Email: ps@hymatik.com | www.hymatik.com | Hvidkaervej 27a, DK-5250 Odense SV, Denmark

Dimensions (mm)

Filters

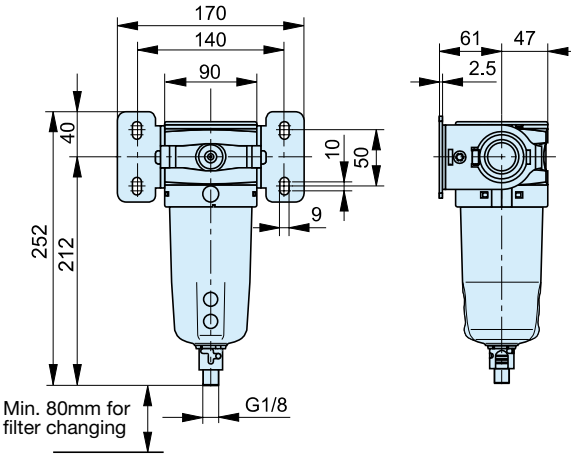

Filter/Regulators

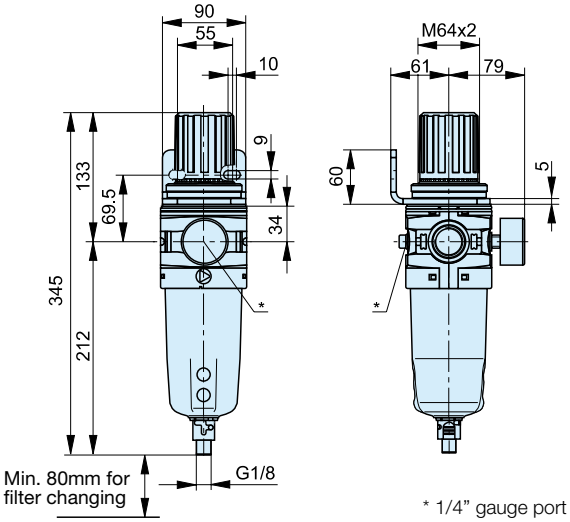

* 1/4" gauge port

Regulators

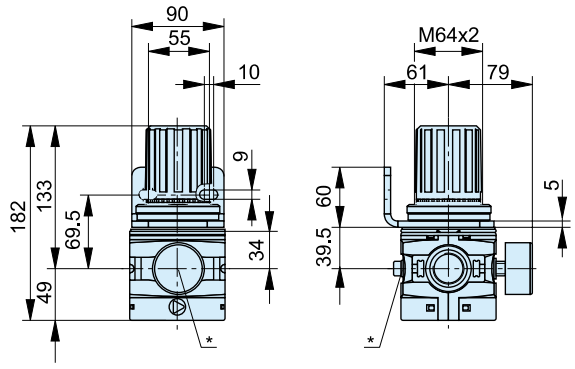

* 1/4" gauge port

Lubricators

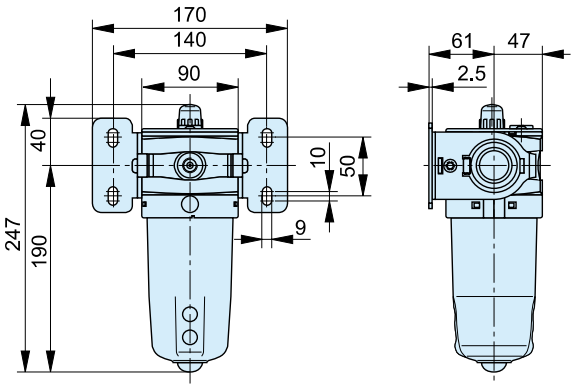

Service kits

Description	Order code
5 micron element kit	**P3YKA00ESE**
40 micron element kit	**P3YKA00ESG**
Bowl kit with combined manual/semi auto drain	**P3YKA00BSC**
Bowl kit with auto drain	**P3YKA00BSA**
Key Lock Kit	**P3XKA00AS**
Diaphragm kit (relieving type)	**P3YKA00RR**
Diaphragm kit (non-relieving type)	**P3YKA00RN**
Angle bracket + metal lock ring	**P3YKA00MS**
Panel mount nut	**P3YKA00MM**

Tel: +45 63 12 83 00 | Email: ps@hymatik.com | www.hymatik.com | Hvidkaervej 27a, DK-5250 Odense SV, Denmark

DECLARATION

We **Parker Hannifin Manufacturing Austria GmbH**
Pneumatic Division
Dr. Alexander Schärfstrasse 12
2700 Wiener Neustadt
Austria

Product	**Series**	**Category**
Filter	P3ZFA	for zone 1, 21
Regulator	P3ZRA	for zone 1, 21
Lubricator	P3ZLA	for zone 1, 21
Manifold	P3ZMA	for zone 1, 21
For non-fitted solenoid product		
Soft Start & Dump Valve	P3ZTA	for zone 1, 21
Soft Start Valve	P3ZSA	for zone 1, 21
Dump Valve	P3ZDA	for zone 1, 21

Following Ignition Hazard Assessments performed on the non-electrical products listed above, in accordance with the requirements of EN 13463-1:2009, it was considered that the equipment does not contain its own source of ignition, and therefore is not within the scope of directive 94/9/EC.

The products can be used in a Group II Category 2 environment assuming that the ATEX Directive and the following conditions are complied with:

- Installation and maintenance of the product must be undertaken by qualified personnel.
- Do not mount the products in an area where impact may occur.
- Filters must be used to limit the introduction of particles and to capture particles generated in service.
- Supply air quality must be within ISO 8573-1:2010 Class 1.4.2.
- Maximum working temperature to be as stated on product label.
- WARNING – pulsating pressure and/or a closed circuit can generate heat.
- Deposits of dust on the product must not exceed 5mm thickness.
  Refer to technical file for surface areas of plastics.
  The unit must be earthed via the compressed air supply line.
- The unit must not come into contact with liquid solvents, acids or alkalis.
  Refer to technical file for chemicals known to be incompatible.
  Product cleaning must be undertaken using a method complying with the specification of the ATEX zone, preferably by using mild soap and water or antistatic products.
- **Regulators, Filter Regulators:**
  Do not use Regulators or Filter Regulators within systems that can create vibration within the Regulator/Filter Regulator unit.
- **Solenoid Operated Valves:**
  Are suitable for use in an ATEX environment, (Group II Category 2) providing ATEX approved solenoids are fitted.
- Technical file available on request.

Approved by:

E. Bauregger (Location Engineering Manager)

The all metal P3Z Series FRLs are ideal for most medium sized ring main installations.



- Self relieving feature plus balanced poppet provides quick response and accurate pressure regulation.
- Threaded port flange available to G1-1/2" and G2"
- Proportional oil delivery over a wide range of air flows.

Operating information

Working pressure:	0 - 17.5 bar
Working temperature:	0 °C to +60 °C

Flow characteristics

Flow	Filter	>666,6 dm^3/s
	Regulator	>666,6 dm^3/s
	Lubricator	>666,6 dm^3/s

For more information see www.parker.com/euro_pneumatic



Filters

Port size	Description	Order Code
-	40µ auto drain without flange SAE	**P3ZFA00HMAN**
G1.1/2"	40µ auto drain flange fitted to SAE	**P3ZFA1BHMAN**
G2"	40µ auto drain flange fitted to SAE	**P3ZFA1CHMAN**



Coalescing Filters

Port size	Description	Order Code
-	0.01 micron, auto drain	**P3ZFA00DMAN**
G1.1/2"	0.01 micron, auto drain, flange fitted to SAE	**P3ZFA1BDMAN**
G2"	0.01 micron, auto drain, flange fitted to SAE	**P3ZFA1CDMAN**



Dust Filters

Port size	Description	Order Code
-	1µ auto drain (pressure relief) without flange SAE	**P3ZFA00MMAN**
G1.1/2"	1µ auto drain (pressure relief) flange fitted to SAE	**P3ZFA1BMMAN**
G2"	1µ auto drain (pressure relief) flange fitted to SAE	**P3ZFA1CMMAN**



Adsorber Filters

Port size	Description	Order Code
-	Adsorber, auto drain	**P3ZFA00BMAN**
G1.1/2"	Adsorber, auto drain	**P3ZFA1BBMAN**
G2"	Adsorber, auto drain	**P3ZFA1CBMAN**

Tel: +45 63 12 83 00 | Email: ps@hymatik.com | www.hymatik.com | Hvidkaervej 27a, DK-5250 Odense SV, Denmark



Regulators

Port size	Description	Order Code
-	8 bar, relieving + gauge, without flange SAE	**P3ZRA00BNGN**
G1.1/2"	8 bar, relieving + gauge	**P3ZRA1BBNGN**
G2"	8 bar, relieving + gauge	**P3ZRA1CBNGN**
-	16 bar relieving + gauge, without flange SAE	**P3ZRA00BNJN**
G1.1/2"	16 bar, relieving + gauge	**P3ZRA1BBNJN**
G2"	16 bar, relieving + gauge	**P3ZRA1CBNJN**



Regulators Pilot Control

Port size	Description	Order Code
-	16 bar, air pilot	**P3ZRA00BPPN**
G1.1/2"	16 bar, relieving + gauge	**P3ZRA1BBPPN**
G2"	16 bar, relieving + gauge	**P3ZRA1CBPPN**

Combined Soft Start Dump Valve and Remote Operated Dump Valve

Port size	Description	Order Code
-	Solenoid operated (not included)	**P3ZTA00SCN0000**
-	24VDC 22mm coil	**P3ZTA00SCNB2CN**
G1.1/2"	Solenoid operated (not included)	**P3ZTA1BSCN0000**
G1.1/2"	24VDC 22mm coil	**P3ZTA1BSCNB2CN**
G2"	Solenoid operated (not included)	**P3ZTA1CSCN0000**
G2"	24VDC 22mm coil	**P3ZTA1CSCNB2CN**

Soft Start Valve

Port size	Description	Order Code
-	Internal air pilot operated	**P3ZSA00Y0N**
G1.1/2"	Internal air pilot operated	**P3ZSA1BY0N**
G2"	Internal air pilot operated	**P3ZSA1CY0N**



Lubricators

Port size	Description	Order Code
-	Lubricator, without flange SAE	**P3ZLA00LSMN**
G1.1/2"	Lubricator	**P3ZLA1BLSMN**
G2"	Lubricator	**P3ZLA1CLSMN**
G2"	Central airline lubricator with electrical oil level control	**P3ZLA1CEMMW**
G2"	Central airline lubricator with aluminium bowl	**P3ZLA1CMMMW**
	Lubricator OIL - VG32 - 1 Litre	**P3YKA00PPBB**



Options & Accessories

Port size	Description	Order Code
G1.1/2"	Connection flange kit	**P3ZKA1BCP**
G2"	Connection flange kit	**P3ZKA1CCP**
-	Wall mounting kit	**P3ZKA00MW**
-	Coupling kit	**P3ZKA00CB**
-	Coupling 'O' ring kit (5 off)	**P3ZKA0CCY**
-	Porting block kit (1", 1/8" & 2 x 1/4" take off)	**P3ZMA1V0N**

Tel: +45 63 12 83 00 | Email: ps@hymatik.com | www.hymatik.com | Hvidkaervej 27a, DK-5250 Odense SV, Denmark

- Very fast response times
- Accurate output pressure
- Micro parameter settings
- Selectable I/O parameters
- Quick, full flow exhaust
- LED display indicates output pressure
- No air consumption in steady state
- Multiple mounting options
- Protection to IP65
- P31P flows to 19 dm^3/s (40 scfm)
- P32P flows to 57 dm^3/s (120 scfm)



P31PA Series
Bottom exhaust



P32PA Series
Bottom exhaust

Order Key

P 3 | | P A | | | | | 2 | | | 1 A

Port size	
Global Mini (1/4")	1
Global Compact (1/2")	2

Thread type	
BSPP	1
NPT	9

Port size	
Global Mini (1/4")	2
Global Compact (1/2")	4

Version	
Bottom ported exhaust NC	A
Bottom ported forced exhaust (NO) *	E

Pressure Range	
0 - 2 bar	Z
0 - 7 bar	S
0 - 10 bar	D

Power supply	
24 volts	2

Control Signal	
0-10 V	V
4-20 mA	A

Output Signal		
Digital, PNP	1)	D
PNP or 0-10V	2)	P
NPN or 0-10V	3)	N
4-20mA fixed	4)	M

Input connector	
M12 (4 pin)	1

* When the supply voltage is lost the unit will automaticaly exhaust the regulated pressure to 0 bar (atmospheric pressure)

1) Digital PNP output only, no analogue output selectable
2) Digital PNP and analogue 0-10V outputs selectable, by means of parameter 6. (Factory default 0-10V)
3) Digital NPN and analogue 0-10 V outputs selectable by means of parameter 6. (Factory default 0-10V)
4) Analogue 4-20mA output only.

Note: On all analogue outputs the F.S. value can be adjusted by means of parameter 8

P31P Mounting brackets

Order Code	Description
P3HKA00ML	L-Bracket mounting kit
P3HKA00MC	Foot bracket mounting kit

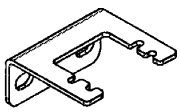

L-Bracket

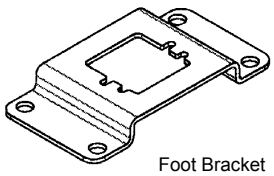

Foot Bracket

P32P Mounting brackets

Order Code	Description
P3KKA00ML	L-Bracket mounting kit
P3KKA00MC	Foot bracket mounting kit

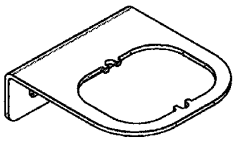

L-Bracket

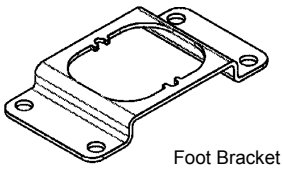

Foot Bracket

Cables

Order Code	Description
P8L-MC04A2A-M12	2 mtr. cable with moulded straight M12x1 connector
P8L-MC04R2A-M12	2 mtr. cable with moulded 90 degree M12x1 connector.

Note:
These brackets fit both Proportional Regulators and Combined Soft Start & Dump Valves.

Tel: +45 63 12 83 00 | Email: ps@hymatik.com | www.hymatik.com | Hvidkaervej 27a, DK-5250 Odense SV, Denmark

P31P

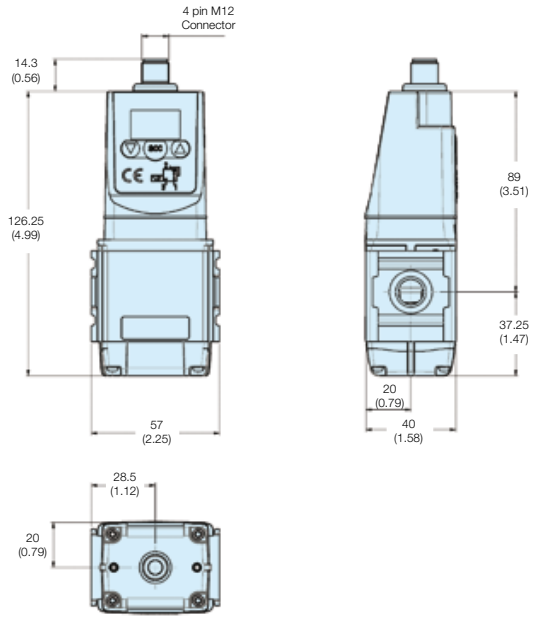

P32P

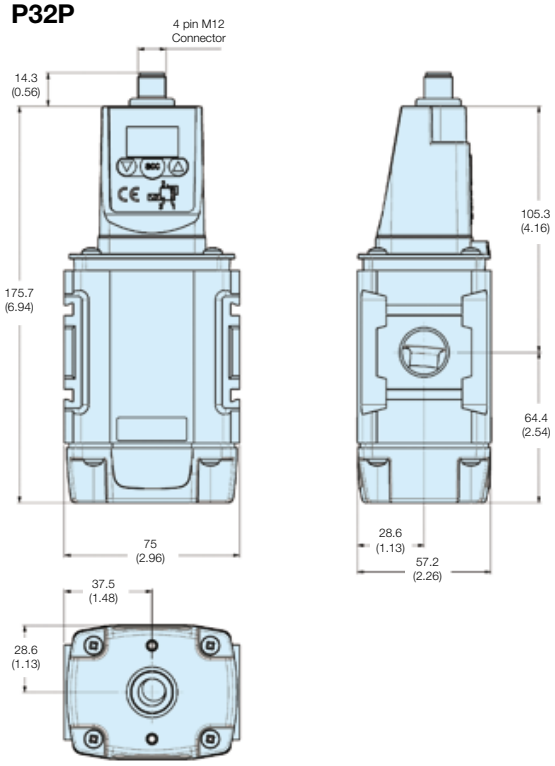

L-Bracket

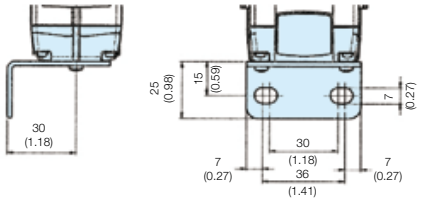

L-Bracket

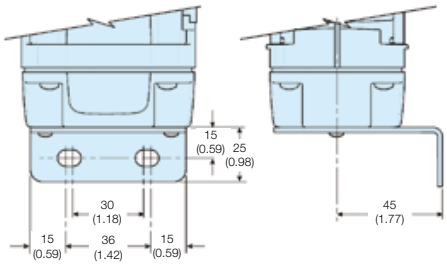

Foot Bracket

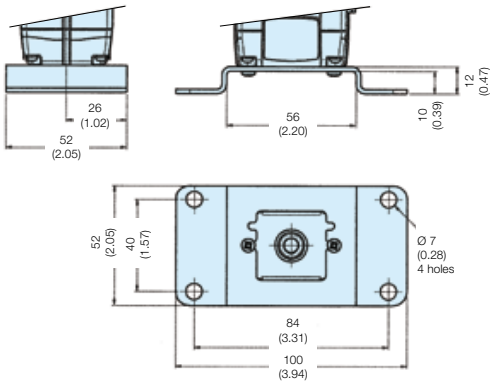

Foot Bracket

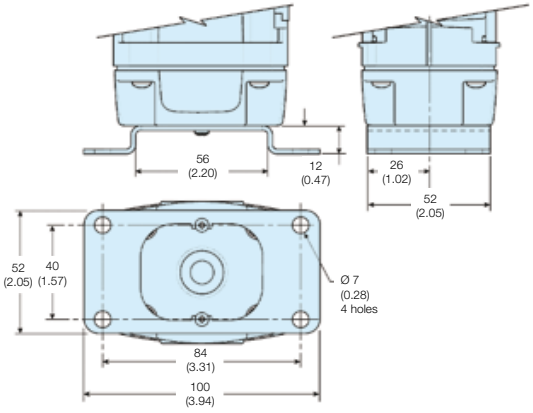

Dimensions are in mm (Inches)

Tel: +45 63 12 83 00 | Email: ps@hymatik.com | www.hymatik.com | Hvidkaervej 27a, DK-5250 Odense SV, Denmark

P3X Proportional Pressure Regulator



- Integral 1/2" or 3/4" ports (BSPP & NPT)
- Accurate output pressure
- Very fast response times
- Robust but lightweight design.

Options:

P 3 X P A [ ] [ ]

BSPP (G)	1
NPT *	9

* NPT Ports on request 1/2" size only

1/2	4
3/4	6

Side exhaust NC (Normally closed)	B
Side exhaust NO (Normally open)	C

*	0 - 7 bar	S
	0 - 10 bar	D

* Other pressures available on request.

24 volts	2

4-20mA	A
0-20mA	B
0-10V	V

Analogue 0-10V	A

M12 (5 pin)	2

Without bracket	A

Popular options:

Port size	Description	Order Code	Control signal	Output signal	Output pressure	Weight kg
1/2	Normally closed	**P3XPA14BD2VA2A**	0 - 10 V	0 - 10 V	0 - 10 bar	0.75
3/4	Normally closed	**P3XPA16BD2VA2A**	0 - 10 V	0 - 10 V	0 - 10 bar	0.75

Dimensions (mm)

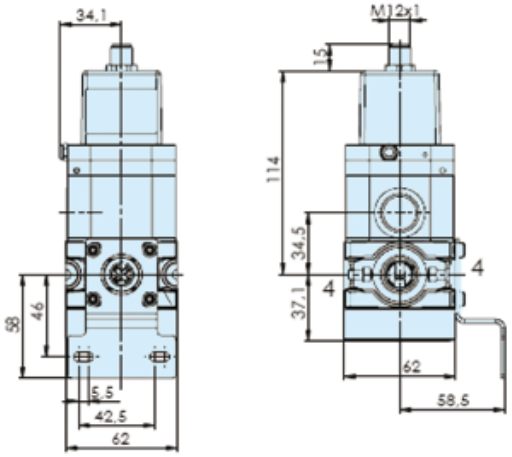

* Two opposite gauge ports G1/4, plug screw mounted
** Connection for 5-pin plug M12 x 1
*** Exhaust port 1/2"

Tel: +45 63 12 83 00 | Email: ps@hymatik.com | www.hymatik.com | Hvidkaervej 27a, DK-5250 Odense SV, Denmark

P3Y Proportional Pressure Regulator



- Integral 3/4 or 1” ports (BSPP & NPT)
- Accurate output pressure
- Very fast response times
- Robust but lightweight design.

Options:

P 3 Y P A												
BSPP (G) 1 NPT 9		3/4 6 1” 8		Side exhaust NC (Normally closed) B Side exhaust NO (Normally open) C		* 0 - 7 bar S 0 - 10 bar D		24 volts 2		4-20mA A 0-20mA B 0-10V V		Analogue 0-10V A		M12 (5 pin) 2		Without bracket A

* Other pressures available on request.

Popular options:

Port size	Description	Order Code	Control signal	Output signal	Output pressure	Weight kg
3/4	Normally closed	**P3YPA16BD2VA2A**	0 - 10 V	0 - 10 V	0 - 10 bar	1.2
1”	Normally closed	**P3YPA18BD2VA2A**	0 - 10 V	0 - 10 V	0 - 10 bar	1.2

Dimensions (mm)

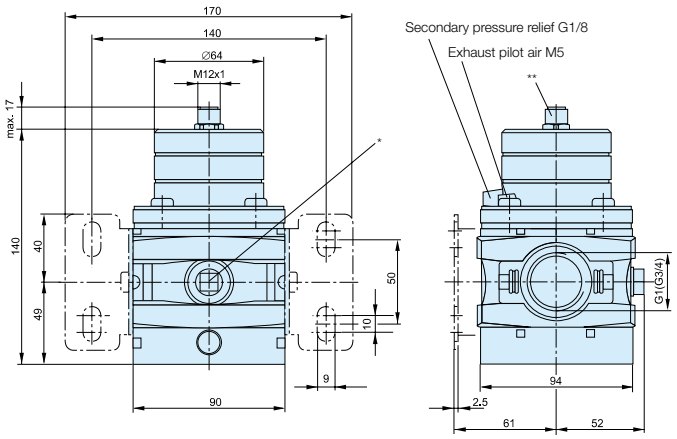

* Two opposite gauge ports G1/4, plug screw mounted
** Connection for 5-pin plug M12 x 1

Tel: +45 63 12 83 00 | Email: ps@hymatik.com | www.hymatik.com | Hvidkaervej 27a, DK-5250 Odense SV, Denmark

P3Z Proportional Pressure Regulator



- Flanged 1-1/2” or 2” ports (BSPP & NPT)
- Accurate output pressure
- Very fast response times
- Robust die-cast aluminium construction

Options:

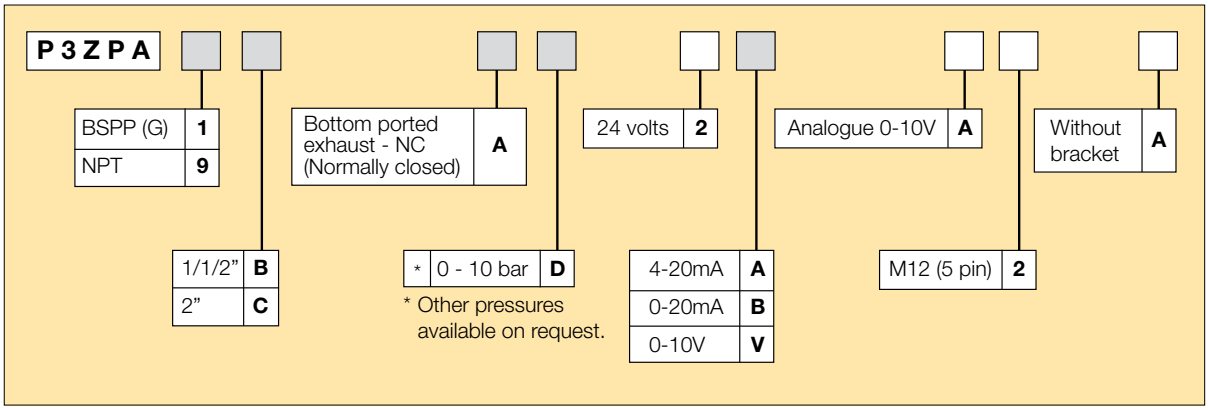

Popular options:

Port size	Description	Order Code	Control signal	Output signal	Output pressure	Weight kg
1-1/2”	Normally closed	**P3ZPA1BAD2VA2A**	0 - 10 V	0 - 10 V	0 - 10 bar	1.2
2”	Normally closed	**P3ZPA1CAD2VA2A**	0 - 10 V	0 - 10 V	0 - 10 bar	1.2

Dimensions (mm)

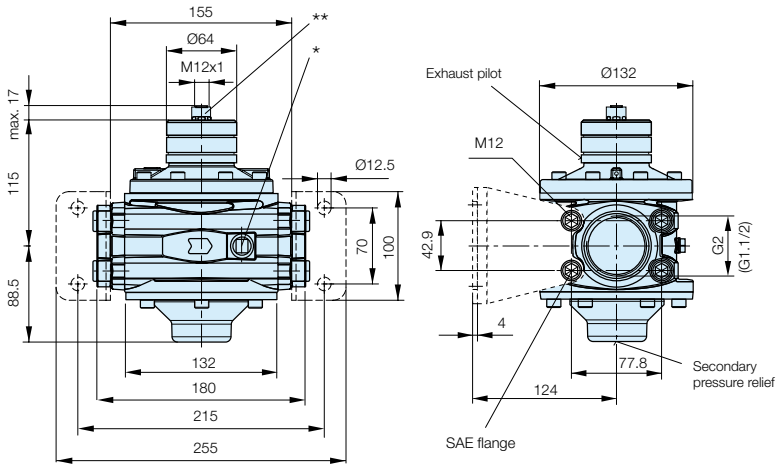

* Two opposite gauge ports G1/4, plug screw mounted

** Connection for 5-pin plug M12 x 1

Tel: +45 63 12 83 00 | Email: ps@hymatik.com | www.hymatik.com | Hvidkaervej 27a, DK-5250 Odense SV, Denmark

Lucifer® EPP4 Basic and Comfort 1/4" and 1/2" Technical Data

	Basic 1/4"	Basic 1/2"
Fluids:	Lubricated or non lubricated air and neutral gases Recommended filtration: 50 µm	
Temperature range:	Ambient: 0°C to +50 °C Fluid: 0°C to +50 °C	
Inlet pressure range: The inlet pressure must always be at least 1 bar above the regulated pressure.	1 to 12 bar	1 to 12 bar
Outlet pressure range:	0.05 to 10 bar	
Hysteresis:	± 50 mbar (factory set up)	
Air consumption at constant control signal:	0	
Supply voltage:	24 V DC ± 15 % (Max. ripple 1 V)	
Power consumption:	Max. 2.8 W with 24 V DC and constant changes of the control signal < 1.5 W without change of control signal	
Control signal:	Analog 0 - 10 V Analog 4 - 20 mA	
Max. flow: Indicative response time: With a volume of 300 cm^3 at the outlet of the regulator	70 m^3/h	150 m^3/h
Filling 2 to 4 bar: Filling 2 to 8 bar: Emptying 4 to 2 bar: Emptying 8 to 2 bar:	50 msec 100 msec 70 msc 130 msc	60 msec 120 msec 90 msec 190 msc
Safety position:	In case of control signal failure or if it is less than 50mV, the regulated pressure drops automatically to 0 bar (atmospheric pressure). In case of voltage supply failure, the regulated pressure will be kept constant.	
Electrical connection:	M12 - 4 pin; 4 x 0.34 mm^2	
Life expectancy:	> 50 Million changes of control signal steps	
Mounting position:	Indifferent (recommended position: upright; electronic part on top)	
Resistance to vibrations:	30 g in all directions	
Degree of protection:	IP 65	
Assembly:	Silicone free	
Electromagnetic compatibility: In accordance with:	EN 61000-6-1: 2001 EN 61000-6-2: 2001 EN 61000-6-3: 2001 EN 61000-6-4: 2001	
Installation and setting instructions:	See our "Notice 408038, 408014" and appendix supplied with the product.	

Note: Parker reserves the right to change specifications without notification.

Tel: +45 63 12 83 00 | Email: ps@hymatik.com | www.hymatik.com | Hvidkaervej 27a, DK-5250 Odense SV, Denmark

EPP4 Pressure Regulator Basic G 1/4"



Flow Curve 1/4"

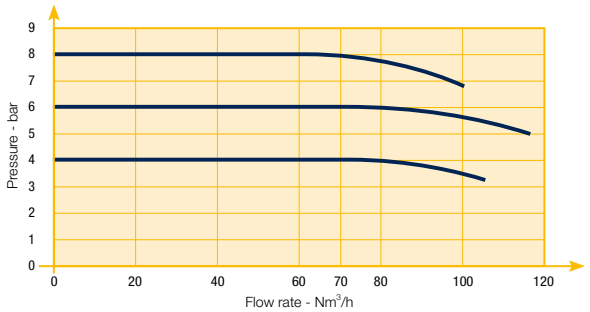

Dimensions

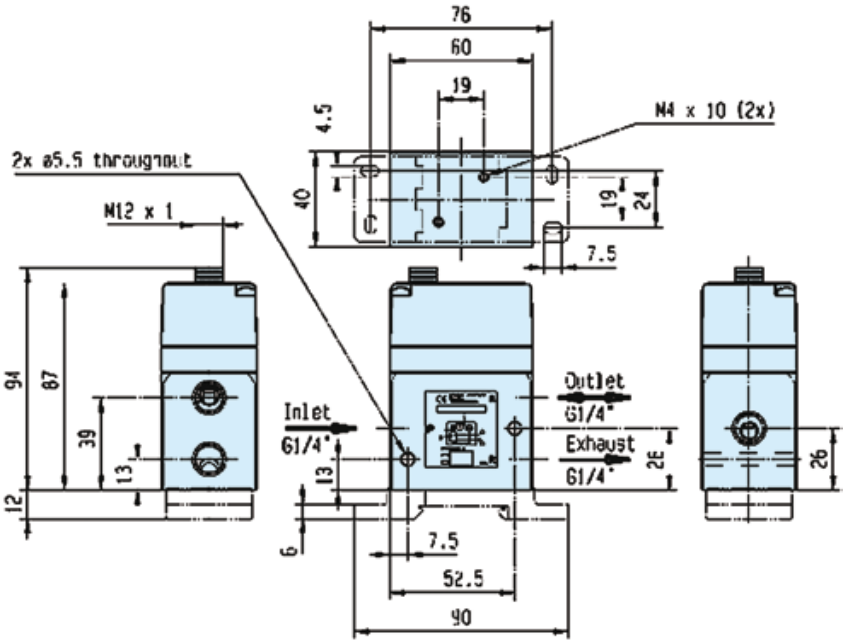

The male connector adopted on the EPP4 is a standard 4 pole M12, without the pin number 4:

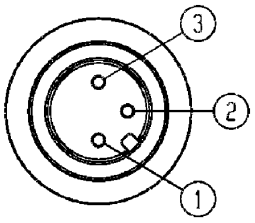

ELECTRICAL CONNECTION

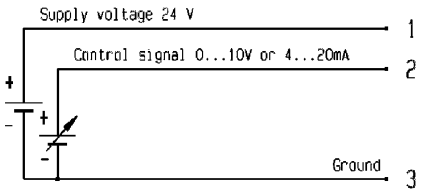

The female connector to mount is the 4 pole M12 connector (IEC 61076-2-101 model LF) where the pin number 4 is not connected.

Accessories

Mounting bracket
(automatically supplied with each EPP4)

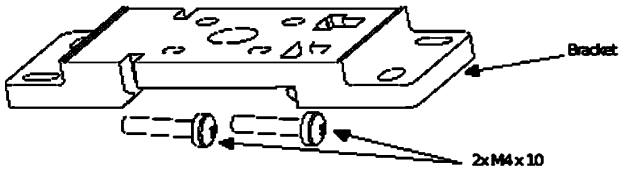

Tel: +45 63 12 83 00 | Email: ps@hymatik.com | www.hymatik.com | Hvidkaervej 27a, DK-5250 Odense SV, Denmark

EPP4 Pressure Regulator Basic G 1/2"



Flow Curve 1/2"

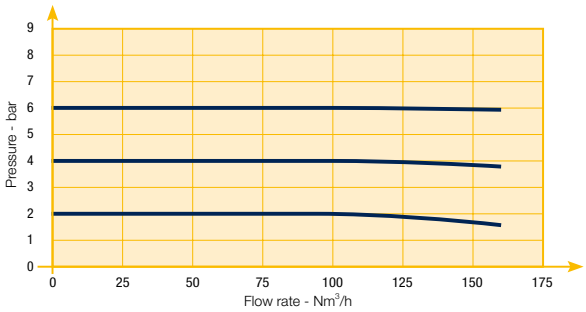

Dimensions

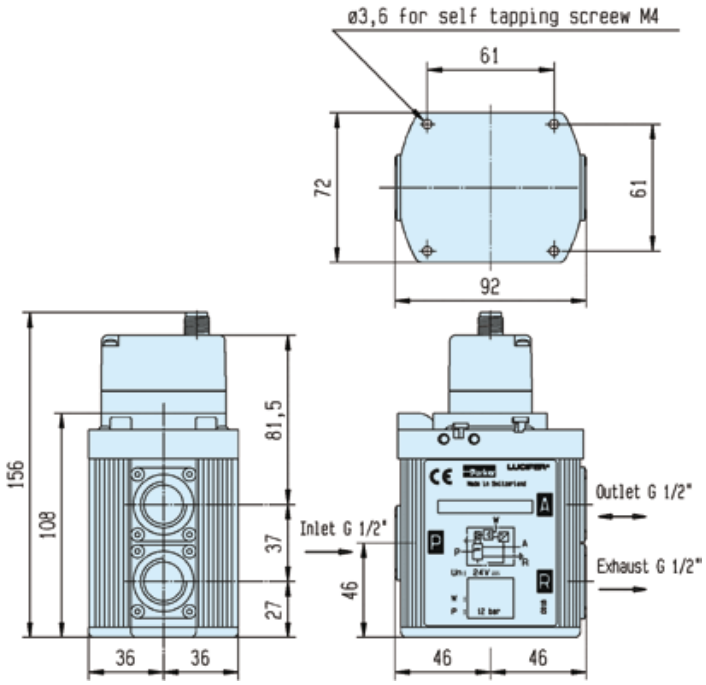

Accessories

Mounting bracket
(to be ordered separately)

Supplied
with 4 x M screws

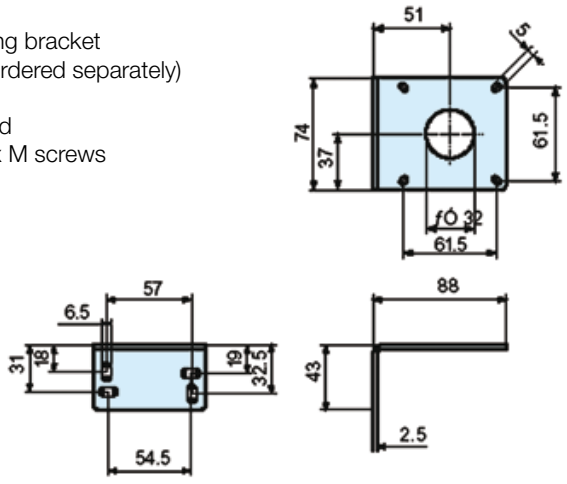

491367

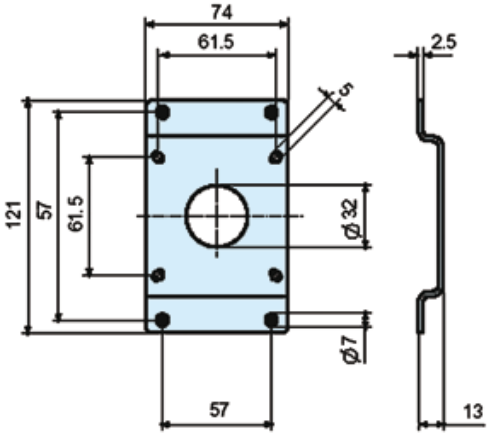

491366

Parker Hannifin Corporation
Pneumatic Division - Europe

Tel: +45 63 12 83 00 | Email: ps@hymatik.com | www.hymatik.com | Hvidkaervej 27a, DK-5250 Odense SV, Denmark

EPP4 Pressure Regulator Basic
G 1/4" and G 1/2"

Order code	Pipe	Pressure Range (bar)		Control Signal (see options)
P4BG2001A001	G 1/4”	0	4 bar	4 - 20 mA
P4BG2001A002	G 1/4"	0	10 bar	0 - 10 V
P4BG2001A003	G 1/4"	0	10 bar	4 - 20 mA
P4BG2001A004	G 1/4"	0	6 bar	0 - 10 V
P4BG2001A005	G 1/4"	0	6 bar	4 - 20 mA
P4BG2001A006	G 1/4"	0	5 bar	0 - 10 V
P4BG2001A007	G 1/4"	0	5 bar	4 - 20 mA
P4BG2001A008	G 1/4"	0	7 bar	0 - 10 V
P4BG2001A009	G 1/4"	0	7 bar	4 - 20 mA
P4BG2003A002 *	G 1/4”	0	10 bar	0 - 10 V
P4BG2003A003 *	G 1/4”	0	10 bar	4 - 20 mA
P4BG4001A002	G 1/2"	0	10 bar	0 - 10 V
P4BG4001A003	G 1/2"	0	10 bar	4 - 20 mA
P4BG4001A004	G 1/2"	0	6 bar	0 - 10 V
P4BG4001A005	G 1/2"	0	6 bar	4 - 20 mA
P4BG4001A006	G 1/2”	0	5 bar	0 - 10 V
P4BG4001A007	G 1/2”	0	5 bar	4 - 20 mA
P4BG4001A008	G 1/2"	0	7 bar	0 - 10 V
P4BG4001A009	G 1/2"	0	7 bar	4 - 20 mA
P4BG4004A010 * **	G 1/2”	0	4 bar	0 - 10 V
**P4BG4051A002 ** **	G 1/2”	0	10 bar	4 - 20 mA
P4BN2001A002	NPT 1/4”	0	10 bar	4 - 20 mA
P4BN2001A003	NPT 1/4”	0	10 bar	0 - 10 V
P4BN4001A002	NPT 1/2”	0	10 bar	4 - 20 mA
P4BN4001A003	NPT 1/2”	0	10 bar	0 - 10 V

* Integrated pilot exhaust
** O2
*** External pressure supply



Tel: +45 63 12 83 00 | Email: ps@hymatik.com | www.hymatik.com | Hvidkaervej 27a, DK-5250 Odense SV, Denmark

Lucifer® EPP4 Comfort 1/4" and 1/2"

References

Order code	Pipe	Pressure Range (bar)		Control Signal (see options)	Display
P4CG2001C001	G 1/4	0	10	0-10 V	-
P4CG2001C002	G 1/4	0	10	4-20 mA	-
P4CG2001C005	G 1/4	0	7	0-10 V	-
P4CG2001C006	G 1/4	0	7	4-20 mA	-
P4CG2002C001	G 1/4	0	10	0-10 V	included
P4CG2002C002	G 1/4	0	10	4-20 mA	included
P4CG2003C001 *	G 1/4	0	10	0-10 V	-
P4CG2003C002 *	G 1/4	0	10	4-20 mA	-
P4CG2002C007	G 1/4	0	7	0-10 V	included
P4CG2002C008	G 1/4	0	7	4-20 mA	included
P4CN2001C001	1/4 NPT	0	10	0-10 V	-
P4CN2001C002	1/4 NPT	0	10	4-20 mA	-
P4CN2002C001	1/4 NPT	0	10	0-10 V	included
P4CN2002C002	1/4 NPT	0	10	4-20 mA	included
P4CG4001C001	G 1/2	0	10	0-10 V	-
P4CG4001C002	G 1/2	0	10	4-20 mA	-
P4CG4001C005	G 1/2	0	7	0-10 V	-
P4CG4001C006	G 1/2	0	7	4-20 mA	-
P4CG4002C001	G 1/2	0	10	0-10 V	included
P4CG4002C002	G 1/2	0	10	4-20 mA	included
P4CG4002C005	G 1/2	0	7	0-10 V	included
P4CG4002C006	G 1/2	0	7	4-20 mA	included
P4CG4051C001 **	G 1/2	0	10	0-10 V	-
P4CG4051C002 **	G 1/2	0	10	4-20 mA	-
P4CN4001C001	1/2 NPT	0	10	0-10 V	-
P4CN4001C002	1/2 NPT	0	10	4-20 mA	-
P4CN4002C001	1/2 NPT	0	10	0-10 V	included
P4CN4002C002	1/2 NPT	0	10	4-20 mA	included

* Integrated pilot exhaust
** O2



Tel: +45 63 12 83 00 | Email: ps@hymatik.com | www.hymatik.com | Hvidkaervej 27a, DK-5250 Odense SV, Denmark

Lucifer® EPP4 Comfort 1/2" High Pressure, 1"and 2" Technical Data

	Comfort 1/2" HP	Comfort 1"	Comfort 2"
Fluids:	Lubricated or non lubricated air and neutral gases - Recommended filtration: 50 µm		
Temperature range:	Ambient: 0°C to +50°C Fluid: 0°C to +50°C		
Inlet pressure range: The inlet pressure must always be at least 1 bar above the regulated pressure.	1 to 21 bar	1 to 21 bar	1 to 12 bar
Outlet pressure range:	0.05 to 20 bar	0.05 to 20 bar	0.05 to 10 bar
Hysteresis:	≤ 100 mbar if P inlet ≤ 10 bar ≤ 200 mbar if P inlet > 10 bar		
Air consumption at constant control signal:	0		
Supply voltage:	24V DC ± 15%		
Power consumption:	Max. 6 W with 24 V DC and constant changes of thecontrol signal < 2 W without change of control signal		
Control signal:	Analog 0 - 10 V Analog 4 - 20 mA		
Outlet sensor signal:	Analog 0 - 10 V Standard for 0 - 10 bar; Adjustable Analog 4 - 20 mA Standard for 0 - 10 bar; Adjustable	Digital 0/24 V for alarm features: Adjustable pressure error (+/-) Adjustable delay ON Adjustable delay OFF Adjustable logic (+/-)	
Max. flow:	150 m^3/h	1 000 m^3/h	2 700 m^3/h
Indicative response time:	With a volume of 330 cm^3 at the outlet of the regulator		
Filling 2 to 8 bar: Emptying 8 to 2 bar:	120 msec 190 msc	250 msec 400 msc	250 msec 400 msc
Safety position:	In case of control signal failure or if it is less than 50 mV, the regulated pressure drops automatically to 0 bar atmospheric pressure (for pressure ranges from 0-10 bar, 100 mV for pressure range over 10 bar). In case of voltage supply failure, the regulated pressure will be kept constant.		
Electrical connection:	M12 - 8 pin; male connector power supply/control signal M12 - 5 pin; male connector communication		
Life expectancy:	> 20 Million changes of control signal steps		
Mounting position:	Indifferent (recommended position: upright; electronic part on top)		
Resistance to vibrations:	30 g in all directions		
Degree of protection:	IP 65		
Assembly:	Silicone free		
Electromagnetic compatibility: In accordance with:	EN 61000-6-1: 2001 EN 61000-6-2: 2001 EN 61000-6-3: 2001 + A11 2004 edition (01/07/07) EN 61000-6-4: 2001		
Installation and setting instructions:	See our "408 193" and appendix supplied with the product.		

Note: Parker reserves the right to change specifications without notification.

Tel: +45 63 12 83 00 | Email: ps@hymatik.com | www.hymatik.com | Hvidkaervej 27a, DK-5250 Odense SV, Denmark

Lucifer® EPP4 Comfort Options

Calys Software

Calys is a unique software in house developed to configurate all the parameters of the EPP4 Comfort range. Calys is an option of the EPP4. A specific cable is needed for the communication between the EPP4 and a PC.



Calys offers the following features:

- Live monitoring (control signal, regulated pressure, supply voltage,…)
- Recording of the main parameters (control signal, regulated pressure, supply voltage,…) in an Excel file
- Free calibration for the inputs and outputs
- Adjustable alarm (positive-negative, pressure limits, delays)
- Configuration files easy to duplicate
- Complete and interactive help file
- Data in 4 different pressure units
- Menus in 4 languages (English, German, French and Italian)

calys

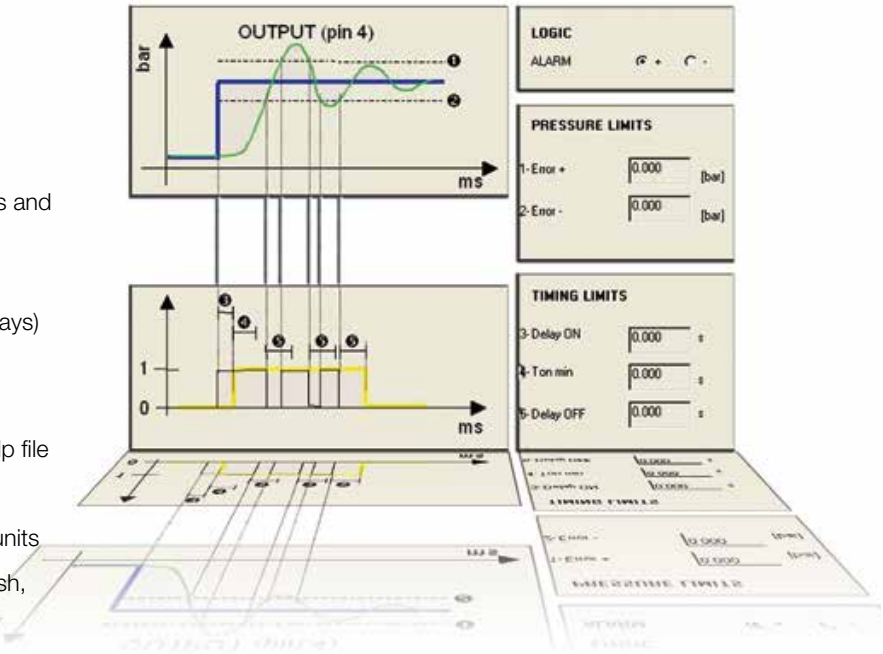

Specific communication cable PC-EPP4 with RS232 and USB connection

Order Reference 496449

To download free Calys software click on **www.parker.com/FCDE/Support**

Tel: +45 63 12 83 00 | Email: ps@hymatik.com | www.hymatik.com | Hvidkaervej 27a, DK-5250 Odense SV, Denmark

Lucifer® EPP4 Comfort 1/2" HP, 1" and 2"

References

Order code	Pipe	Max inlet pressure (bar)	Pressure range (bar)		Control signal (see options)
P4CG4101D001	G1/2	15	0	12	0-10 V
P4CG4201D005	G1/2	21	0	16	0-10 V
P4CG4201D003	G1/2	21	0	20	0-10 V
P4CG4201D004	G1/2	21	0	20	4-20 mA
P4CG6101C009	G1	12	0	3.5	4-20 mA
P4CG6101C011	G1	12	0	5.0	0-10 V
P4CG6101C010	G1	12	0	6.0	4-20 mA
P4CG6101C001	G1	12	0	10	0-10 V
P4CG6101C002	G1	12	0	10	4-20 mA
P4CG6201D001	G1	21	0	12	-
P4CG6201D003	G1	21	0	20	0-10 V
P4CG9101C012	G2	12	0	4.0	4-20 mA
P4CG9101C010	G2	12	0	6.0	4-20 mA
P4CG9101C001	G2	12	0	10	0-10 V
P4CG9101C002	G2	12	0	10	4-20 mA

Other specific settings or specialties are available, please contact us.



Lucifer® EPP4 Comfort Range 1/4"



Dimensions

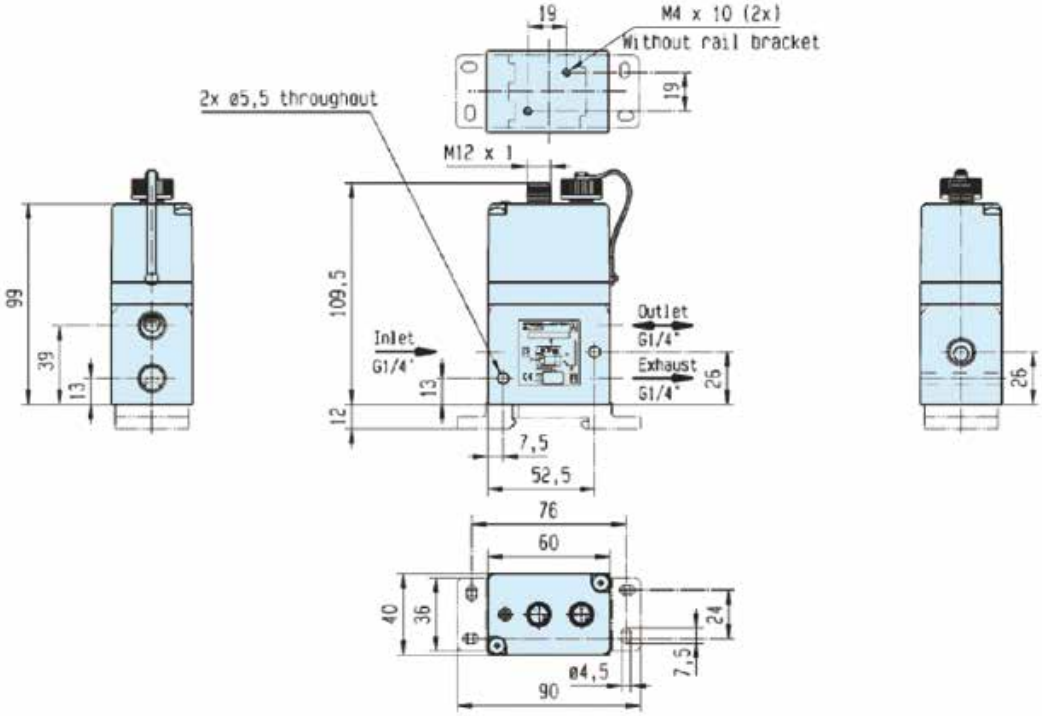

Accessories

Mounting bracket
(supplied as a standard with each Lucifer® EPP4 1/4")

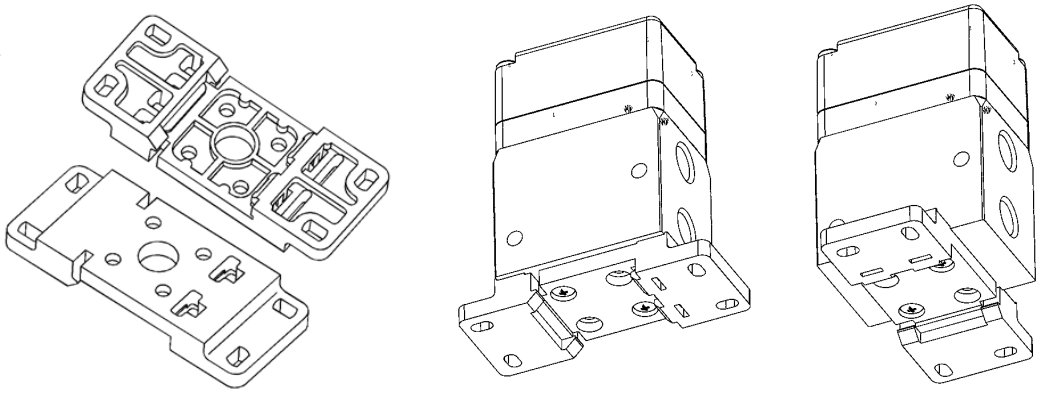

Lucifer® EPP4 Comfort Range 1/2"



Dimensions

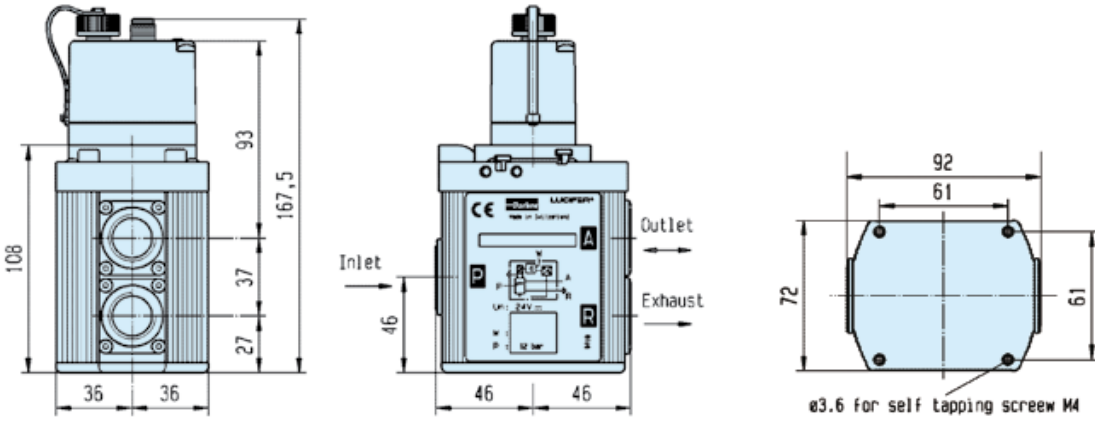

Accessories

Mounting brackets to be ordered separately

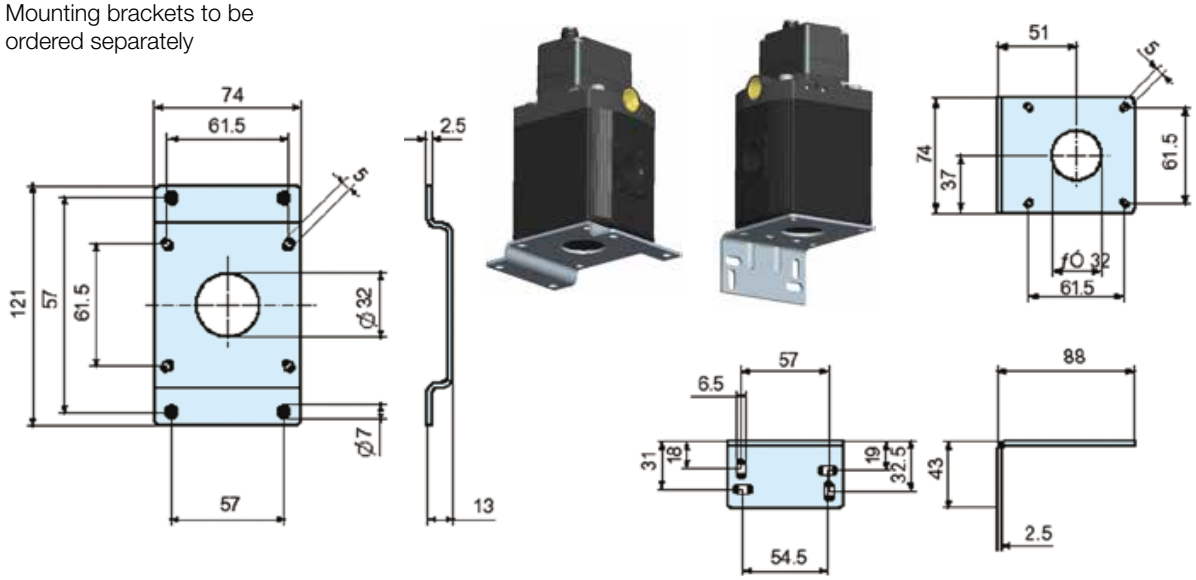

Order reference 491366

Order reference 491367

Lucifer® EPP4 Comfort Range 1/2"
High Pressure 21 bar



Dimensions

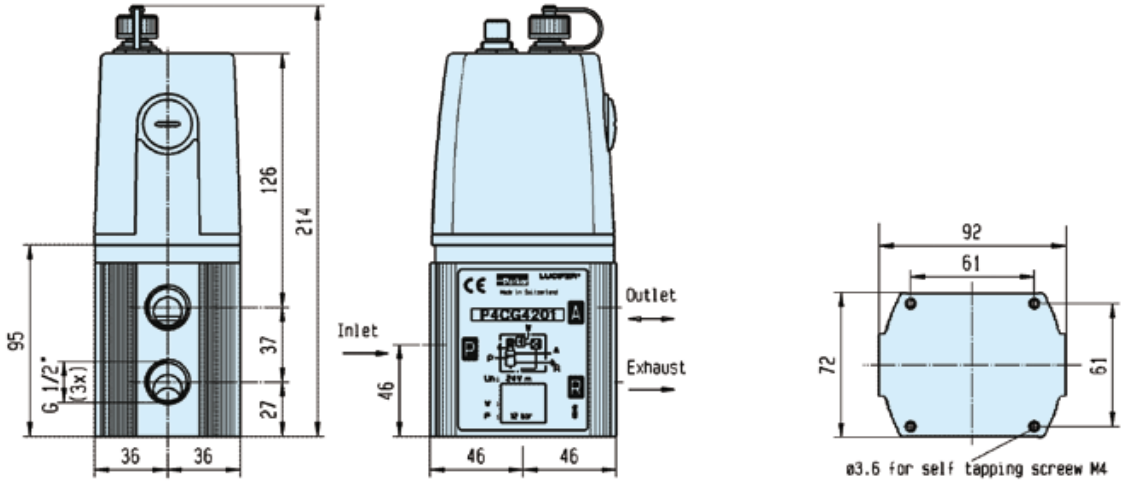

Accessories

Mounting brackets to be ordered separately

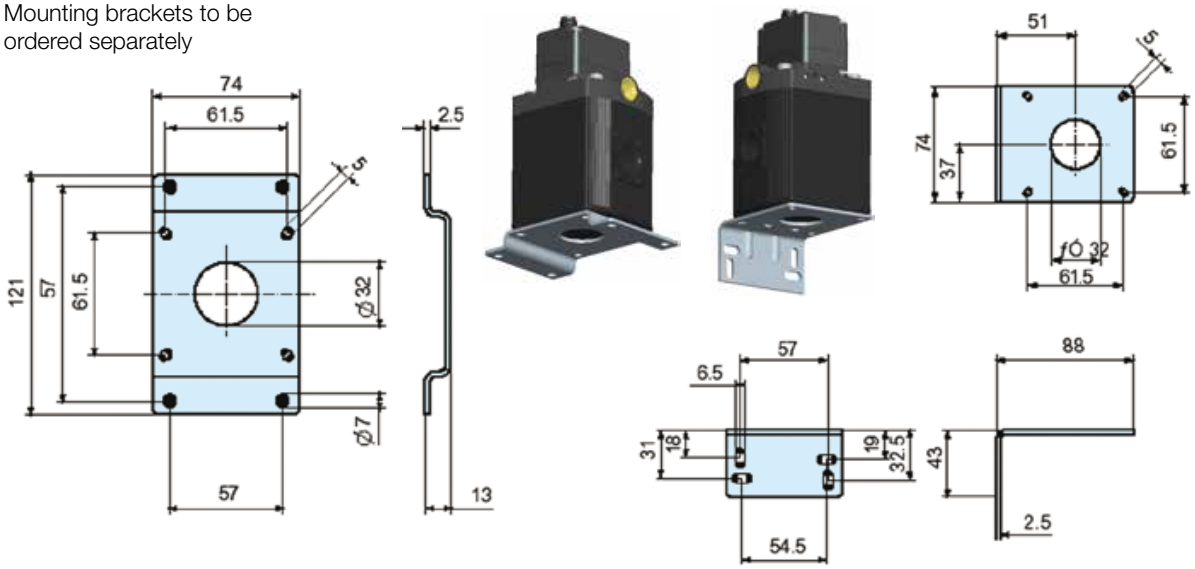

Order reference 491366

Order reference 491367

Lucifer® EPP4 Comfort Range 1"



Dimensions

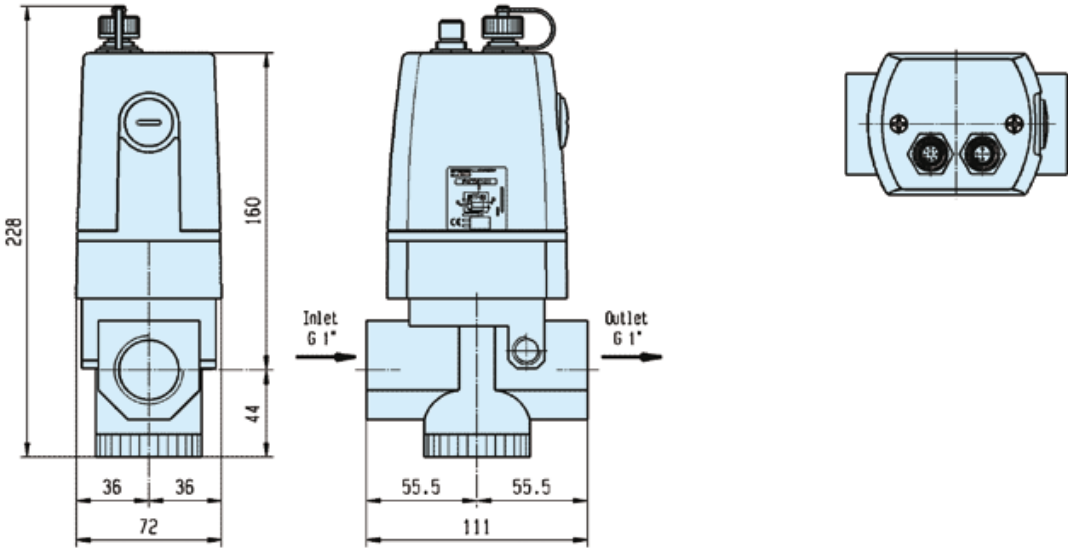

Flow Curve 1/2"

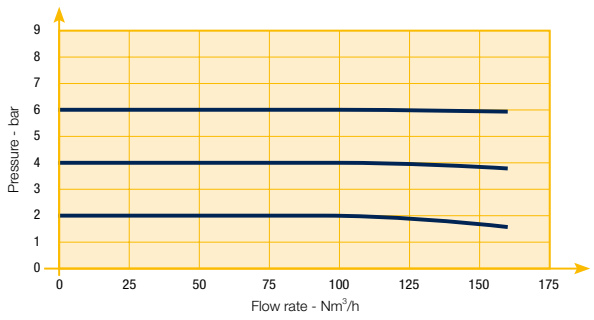

Flow Curve 1"

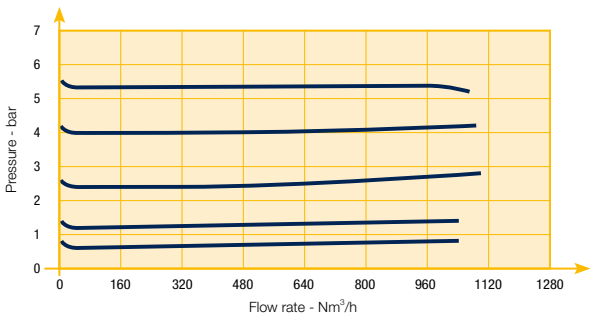

Tel: +45 63 12 83 00 | Email: ps@hymatik.com | www.hymatik.com | Hvidkaervej 27a, DK-5250 Odense SV, Denmark

Lucifer® EPP4 Comfort Range 2"



Dimensions

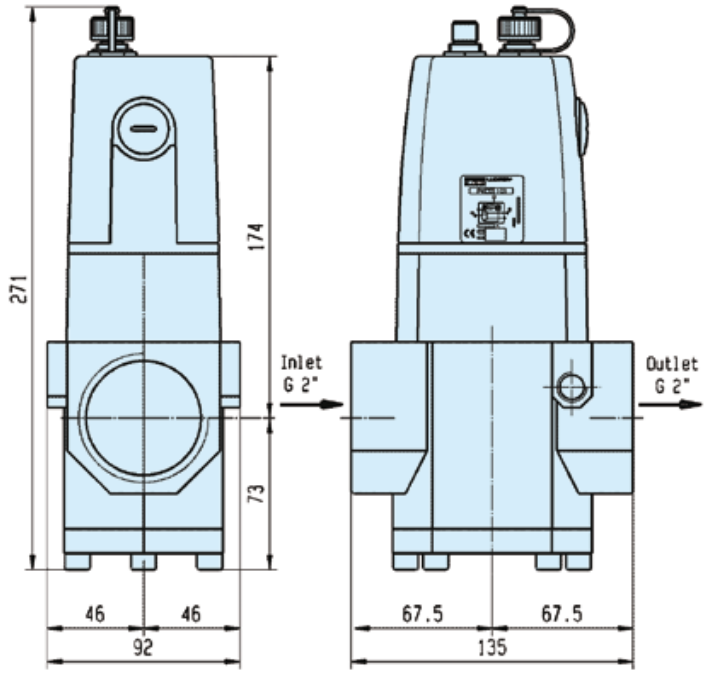

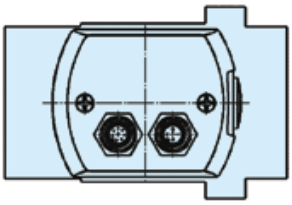

Flow Curve 2"

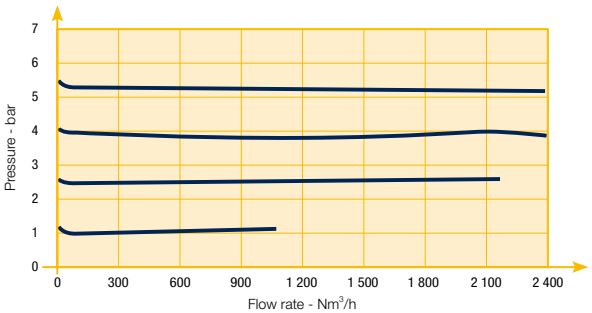

Tel: +45 63 12 83 00 | Email: ps@hymatik.com | www.hymatik.com | Hvidkaervej 27a, DK-5250 Odense SV, Denmark

Lucifer® EPP4 Comfort Options



Additional Features

The EPP4 Comfort offers two main options - a remote display and a software to easily set the regulator's parameters.

These are the key feature options for a comfortable use.

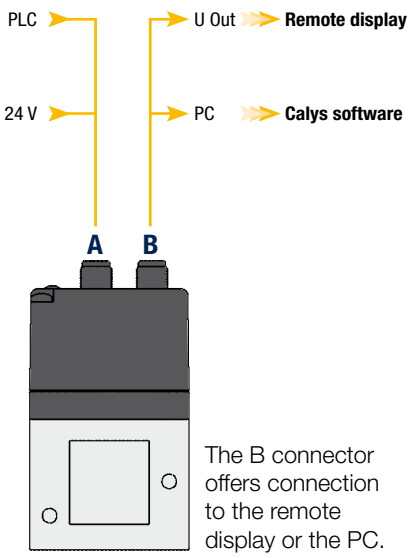

The B connector offers connection to the remote display or the PC.



- A remote display connected to the pressure regulator offers flexible monitoring.
- A panel mounting kit is available to install the remote display.
- Calys is an easy-to-use software package designed to allow the user to match their regulators performance directly to their specific application.
- A power supply and control signal cable.

Tel: +45 63 12 83 00 | Email: ps@hymatik.com | www.hymatik.com | Hvidkaervej 27a, DK-5250 Odense SV, Denmark

Lucifer® EPP4 Comfort 1/4" & 1/2"

Technical Data

	Comfort 1/4"	Comfort 1/2"
Fluids:	Lubricated or non lubricated air and neutral gases - Recommended filtration: 50 µm	
Temperature range:	Ambient: 0°C to +50 °C Fluid: 0°C to +50 °C	
Inlet pressure range: **The inlet pressure must always be at least 1 bar above the regulated pressure.**	1 to 12 bar	1 to 12 bar
Outlet pressure range:	0.05 to 10 bar	
Hysteresis:	± 50 mbar (factory set up)	
Air consumption at constant control signal:	0	
Supply voltage:	24 V DC ± 15 % (Max. ripple 1 V)	
Power consumption:	Max. 2.8 W with 24 V DC and constant changes of the control signal < 1.5 W without change of control signal	
Control signal:	Analog 0 - 10 V Analog 4 - 20 mA	
Outlet sensor signal:	Analog 0 - 10 V Standard for 0 - 10 bar; Adjustable Analog 4 - 20 mA Standard for 0 - 10 bar; Adjustable	Digital 0/24 V for alarm features: Adjustable pressure error (+/-) Adjustable delay ON Adjustable delay OFF Adjustable logic (+/-)
Max. flow:	70 m^3/h	150 m^3/h
Indicative response time:	With a volume of 330 cm^3 at the outlet of the regulator	
Filling 2 to 4 bar : **Filling 2 to 8 bar:** **Emptying 4 to 2 bar:** **Emptying 8 to 2 bar:**	50 msec 100 msec 70 msc 130 msc	60 msec 120 msec 90 msec 190 msc
Safety position:	In case of control signal failure or if it is less than 50 mV, the regulated pressure drops automatically to 0 bar (atmospheric pressure). In case of voltage supply failure, the regulated pressure will be kept constant.	
Electrical connection:	M12 - 8 pin; male connector power supply/control signal M12 - 5 pin; male connector communication	
Life expectancy:	> 50 Million changes of control signal steps	
Mounting position:	Indifferent (recommended position: upright; electronic part on top)	
Resistance to vibrations:	30 g in all directions	
Degree of protection:	IP 65	
Assembly:	Silicone free	
Electromagnetic compatibility: **In accordance with:**	EN 61000-6-1: 2001 EN 61000-6-2: 2001 EN 61000-6-3: 2001 + A11 2004 edition (01/07/07) EN 61000-6-4: 2001	
Installation and setting instructions:	See our "Notice 408128, 408134" and appendix supplied with the product.	

Note: Parker reserves the right to change specifications without notification.

Tel: +45 63 12 83 00 | Email: ps@hymatik.com | www.hymatik.com | Hvidkaervej 27a, DK-5250 Odense SV, Denmark

Lucifer® EPP4 Comfort 1/2", 1" & 2" ATEX



Flow Curves

Flow Curve 1/2"

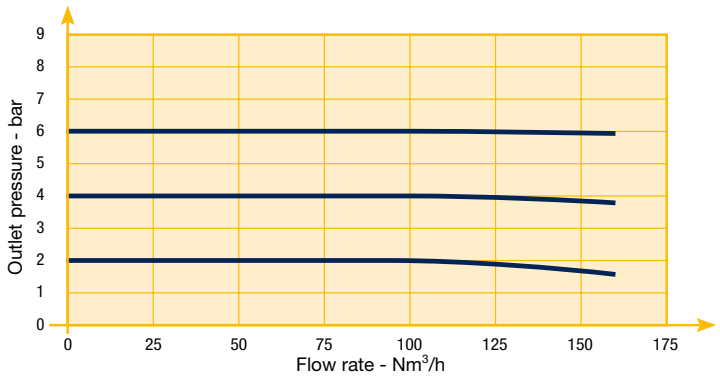

Flow Curve 1"

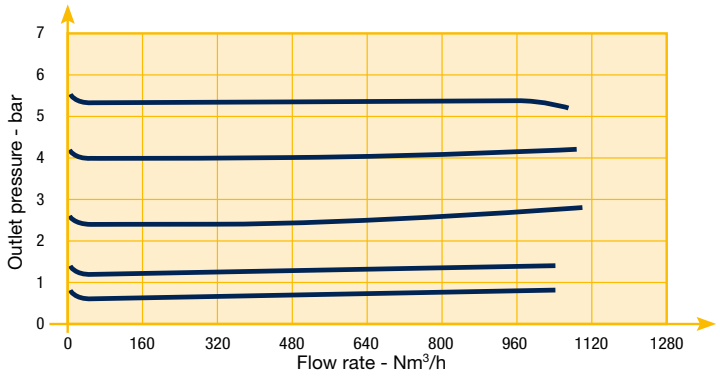

Flow Curve 2"

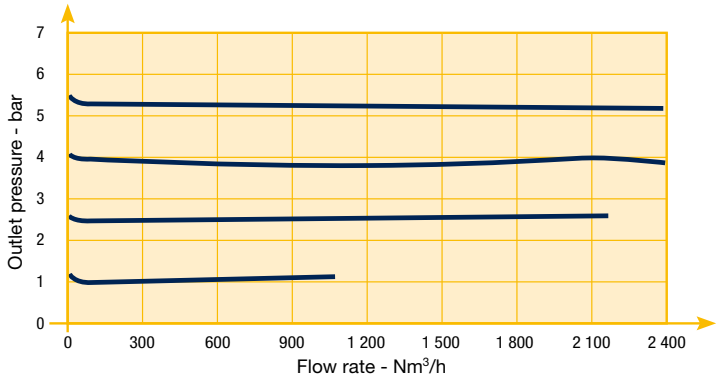

PDE2600PNUK

Parker Pneumatic

Lucifer® EPP4 Comfort 1/2" ATEX

References

Codes	Pipe	Max inlet pressure (bar)	Pressure range (bar)		Control signal (see options)	Dimensional Drawing
P4CG4461C001	G1/2	12	0	10	0-10 V	9
P4CG4461C002	G1/2	12	0	10	4-20 mA	9
P4CG4465C001 **	G1/2	12	0	10	0-10 V	9
P4CG4465C002 **	G1/2	12	0	10	4-20 mA	9

** O2

Other specific settings or specialties are available, please contact us.



Tel: +45 63 12 83 00 | Email: ps@hymatik.com | www.hymatik.com | Hvidkaervej 27a, DK-5250 Odense SV, Denmark

PDE2600PNUK

Parker Pneumatic

Lucifer® EPP4 Comfort 1/2" ATEX



Dimensions (mm)

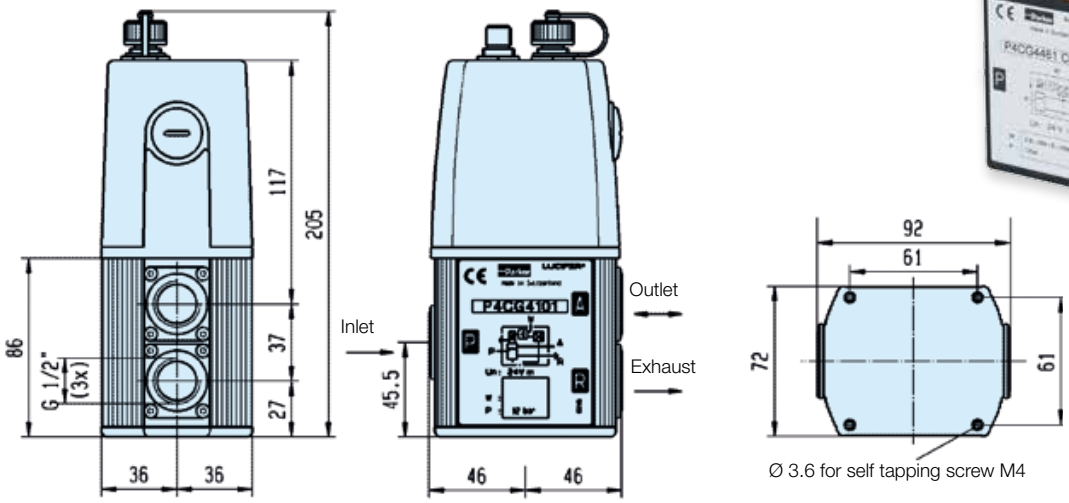

Drawing 9

Lucifer® EPP4 Comfort 1” & 2" ATEX

References

Codes	Pipe	Max inlet pressure (bar)	Pressure range (bar)		Control signal (see options)	Dimensional Drawing
P4CG6161C001	G1	12	0	10	0-10 V	11
P4CG6161C002	G1	12	0	10	4-20 mA	11
P4CG9161C001	G2	12	0	10	0-10 V	12
P4CG9161C002	G2	12	0	10	4-20 mA	12

Other specific settings or specialties are available, please contact us.

Lucifer® EPP4 Comfort 1” & 2” ATEX

Dimensions (mm) - EPP4 Comfort Range 1”



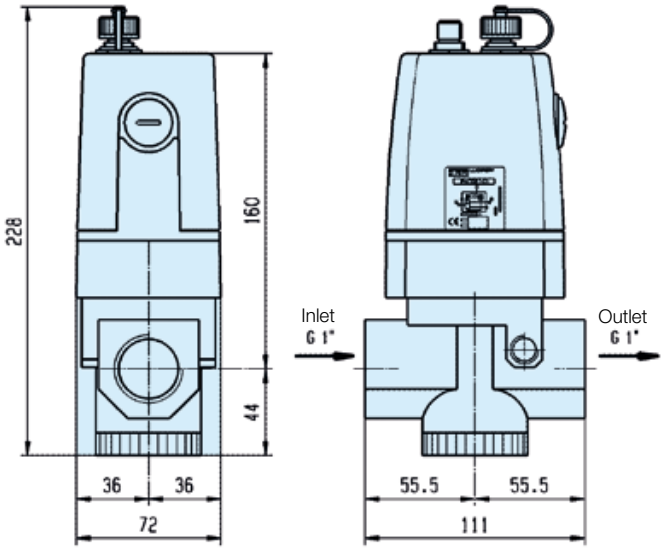

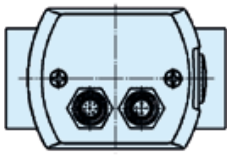

Drawing 11

Dimensions (mm) - EPP4 Comfort Range 2”



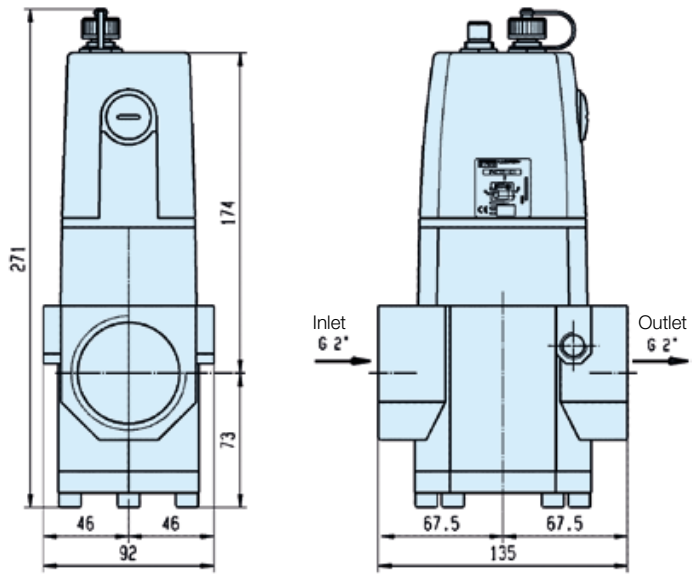

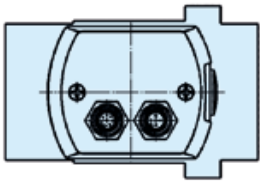

Drawing 12

Parker Angle Seat Valves



Introduction

An angle seat valve is actuated by a pneumatically driven piston and is capable to handle slurry solutions with particles or corrosive solutions at high temperature up to 180°C and operating pressure up to 16 Bar.

Benefits

- Compact design, high flow rates
- Visual position indicator
- For temperatures from -10°C to 180°C
- Working pressures up to 16 Bar
- Dampened closing anti-water hammer design (fluid under seat)
- Stainless Steel actuator housing for exceptional durability in steam and aggressive applications
- Valves meeting Pressure Equipment Directive 97/23/EC
- Mountable in any position
- Tight shut-off and Long Service Life
- Parker Angle Seat Valves conform to the terms of the 94/9/CE directive specific to non electrical equipment for use within potentially explosive environments - zones 1/21 and 2/22



Angle seat valves are suitable for many process and industrial applications:

- Food and Beverage Processing
- Water Technology & Treatment
- Textile Industry
- Cooling systems on injection molding machines
- Pharmaceutical & cosmetic industry
- Chemical Process technology
- Refrigeration & Cooling heat exchangers
- Sterilizers steam supply
- Water applications: Mining, Cement / Concrete Systems, Pulp & Paper
- General industrial applications of aggressive fluids
- Industrial Laundry Equipment
- Industrial Air Dryers



Tel: +45 63 12 83 00 | Email: ps@hymatik.com | www.hymatik.com | Hvidkaervej 27a, DK-5250 Odense SV, Denmark

PDE2600PNUK

Parker Pneumatic

PA Series, 2/2 Way, NC or NO 3/8" to 2 1/2" BSP, 16 bar



- Body Material 304 Stainless Steel or 316 Stainless Steel
- Actuator Material 304 Stainless Steel, or Aluminum
- Function 2/2 NC, NO, NC (anti-water hammer)
- Port size from DN 10 (3/8") to DN 65 (2 1/2")
- Connections: Threads BSP
- Max Working Pressure 16 Bar
- Flow factor KV from 4.7 m^3/h (DN10) to 70 m^3/h (DN 65)
- The PA Series angle seat valves comply with European Pressure Equipmemt Directive 97/23/EC
- Parker Angle Seat Valves conform to the terms of the 94/9/CE directive specific to non electrical equipment for use within potentially explosive environments - Zones 1/21 and 2/22 - Protection II 2 GD c TX
- Pilot Pressure 3 Bar min to 10 Bar according to control pressure charts
- Maximum Fluid Temp -10°C to 180°C
- Ambient Temperature -10°C to 60°C
- Seat Seal material PTFE/RTFE
- Packing Gland: PTFE and PTFE with Carbon
- Installation Any Position
- Optical Position Indicator Standard on all sizes
- Pilot Control Media Air, Neutral Gas
- Fluids handled: Inert gases, hot water, oils, steam, aggressive and corrosive fluids
- Weight from 0.58 Kg (DN10) to 8.65 Kg (DN 65)
- Viscosity: Maxi. 600 mm^2/s (600cSt, 80° E, 2700 SSU)

For liquids, use versions with flow direction under the seat.

- Spare Parts Kits are available for main seat and body gasket replacement (on request)
- 3 Way Direct Acting AC & DC Pilot Control Valves available as separate components

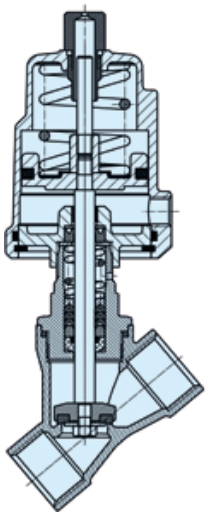

Normally Closed Valve

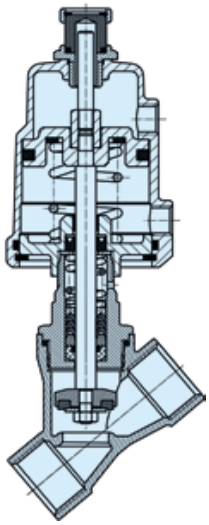

Normally Open Valve

PA Series - Normally Closed Valves
Flow Direction OVER Seat

Model Numbers Shown are BSP threads



304 Stainless Steel Actuators with 304 Stainless Steel Bodies

Size	Port Size	Orifice mm	Actuator mm	KV m^3/h	Operating Pressure Differential bar	Minimum Pilot Control Pressure Range bar	Order code	Weight Kg
DN10	3/8"	13	40	4.7	0-16	4	**PA10S1G3S040S**	0.78
			50	4.7	0-16	3	**PA10S1G3S050S**	1.01
DN15	1/2"	13	40	4.7	0-16	4	**PA15S1G4S040S**	0.80
			50	4.7	0-16	3	**PA15S1G4S050S**	1.03
DN20	3/4"	18	50	9.0	0-16	3-4	**PA20S1G5S050S**	1.06
DN25	1"	24	50	16.0	0-16	3-5.5	**PA25S1G6S050S**	1.38
			63	16.0	0-16	3-3.5	**PA25S1G6S063S**	2.05
DN32	1-1/4"	31	63	24.0	0-16	3-5	**PA32S1G7S063S**	2.40
DN40	1-1/2"	35	63	32.0	0-16	3-6	**PA40S1G8S063S**	2.75
DN50	2"	45	63	50.0	0-10	3-6.5	**PA50S1G9S063S**	3.50
			80	50.0	0-16	3-6.6	**PA50S1G9S080S**	4.62
			100	50.0	0-16	3-5	**PA50S1G9S100S**	5.16
DN65	2-1/2"	65	100	70.0	0-10	3-6	**PA65S1GTS100S**	8.65

304 Stainless Steel Actuators with 316L Stainless Steel Bodies

Size	Port Size	Orifice mm	Actuator mm	KV m^3/h	Operating Pressure Differential bar	Minimum Pilot Control Pressure Range bar	Order code	Weight Kg
DN10	3/8"	13	40	4.7	0-16	4	**PA10S1G3R040S**	0.78
			50	4.7	0-16	3	**PA10S1G3R050S**	1.01
DN15	1/2"	13	40	4.7	0-16	4	**PA15S1G4R040S**	0.80
			50	4.7	0-16	3	**PA15S1G4R050S**	1.03
DN20	3/4"	18	50	9.0	0-16	3-4	**PA20S1G5R050S**	1.06
DN25	1"	24	50	16.0	0-16	3-5.5	**PA25S1G6R050S**	1.38
			63	16.0	0-16	3-3.5	**PA25S1G6R063S**	2.05
DN32	1-1/4"	31	63	24.0	0-16	3-5	**PA32S1G7R063S**	2.40
DN40	1-1/2"	35	63	32.0	0-16	3-6	**PA40S1G8R063S**	2.75
DN50	2"	45	63	50.0	0-10	3-6.5	**PA50S1G9R063S**	3.50
			80	50.0	0-16	3-6.6	**PA50S1G9R080S**	4.62
			100	50.0	0-16	3-5	**PA50S1G9R100S**	5.16
DN65	2-1/2"	65	100	70.0	0-10	3-6	**PA65S1GTR100S**	8.65

Tel: +45 63 12 83 00 | Email: ps@hymatik.com | www.hymatik.com | Hvidkaervej 27a, DK-5250 Odense SV, Denmark

PDE2600PNUK

Parker Pneumatic

PA Series - Normally Closed Valves
Flow Direction OVER Seat

Model Numbers Shown are BSP threads



Aluminium Actuators with 304 Stainless Steel Bodies

Size	Port Size	Orifice mm	Actuator mm	KV m^3/h	Operating Pressure Differential bar	Minimum Pilot Control Pressure Range bar	Order code	Weight Kg
DN10	3/8"	13	50	4.7	0-16	3	**PA10S1G3S050A**	0.75
DN15	1/2"	13	50	4.7	0-16	3	**PA15S1G4S050A**	0.80
DN20	3/4"	18	50	9.0	0-16	3-4	**PA20S1G5S050A**	0.90
DN25	1"	24	50	16.0	0-16	3-5.5	**PA25S1G6S050A**	1.27
			63	16.0	0-16	3-4	**PA25S1G6S063A**	1.65
DN32	1-1/4"	31	63	24.0	0-16	3-5.5	**PA32S1G7S063A**	1.89
DN40	1-1/2"	35	63	32.0	0-16	3-6.5	**PA40S1G8S063A**	2.15
DN50	2"	45	63	50.0	0-10	3-6.5	**PA50S1G9S063A**	2.98
			80	50.0	0-16	3-6.6	**PA50S1G9S080A**	3.56
			100	50.0	0-16	3-5	**PA50S1G9S100A**	4.75
DN65	2-1/2"	65	100	70.0	0-10	3-6	**PA65S1GTS100A**	5.50

Aluminium Actuators with 316L Stainless Steel Bodies

Size	Port Size	Orifice mm	Actuator mm	KV m^3/h	Operating Pressure Differential bar	Minimum Pilot Control Pressure Range bar	Order code	Weight Kg
DN10	3/8"	13	50	4.7	0-16	3	**PA10S1G3R050A**	0.75
DN15	1/2"	13	50	4.7	0-16	3	**PA15S1G4R050A**	0.80
DN20	3/4"	18	50	9.0	0-16	3-4	**PA20S1G5R050A**	0.90
DN25	1"	24	50	16.0	0-16	3-5.5	**PA25S1G6R050A**	1.27
			63	16.0	0-16	3-4	**PA25S1G6R063A**	1.65
DN32	1-1/4"	31	63	24.0	0-16	3-5.5	**PA32S1G7R063A**	1.89
DN40	1-1/2"	35	63	32.0	0-16	3-6.5	**PA40S1G8R063A**	2.15
DN50	2"	45	63	50.0	0-10	3-6.5	**PA50S1G9R063A**	2.98
			80	50.0	0-16	3-6.6	**PA50S1G9R080A**	3.56
			100	50.0	0-16	3-5	**PA50S1G9R100A**	4.75
DN65	2-1/2"	65	100	70.0	0-10	3-6	**PA65S1GTR100A**	5.50

Flow Diagram

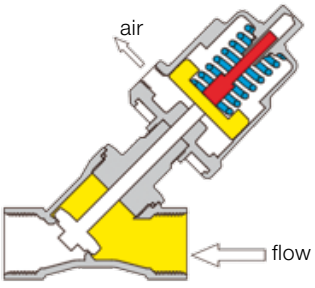

Valve Closed

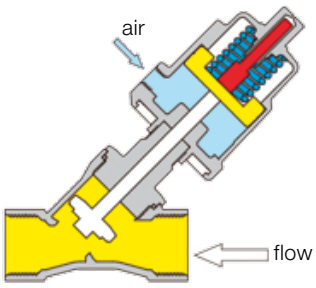

Valve Open

Control Pressure & Operating Pressure Charts for the Normally Closed Valves with Aluminum Actuators

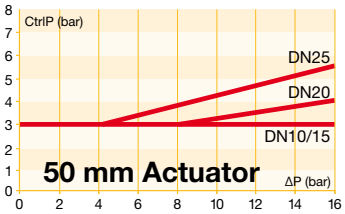

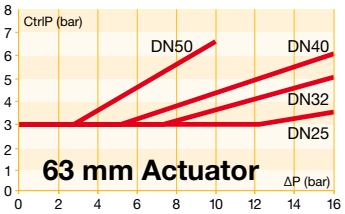

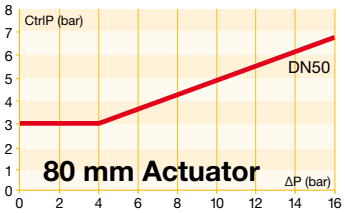

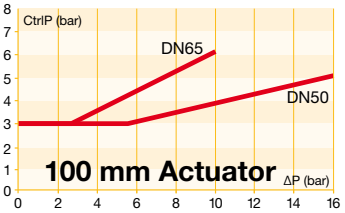

Tel: +45 63 12 83 00 | Email: ps@hymatik.com | www.hymatik.com | Hvidkaervej 27a, DK-5250 Odense SV, Denmark

PA Series - Normally Closed Valves
Flow Direction UNDER Seat
Anti Water Hammer Construction

Model Numbers Shown are BSP threads



304 Stainless Steel Actuators with 304 Stainless Steel Bodies

Size	Port Size	Orifice mm	Actuator mm	KV m^3/h	Operating Pressure Differential bar	Minimum Pilot Control Pressure bar	Order code	Weight Kg
DN10	3/8"	13	50	4.7	0-16	4.5	**PA10SAG3S050S**	1.01
DN15	1/2"	13	50	4.7	0-16	4.5	**PA15SAG4S050S**	1.03
DN20	3/4"	18	50	9.0	0-10	4.5	**PA20SAG5S050S**	1.06
DN25	1"	24	63	16.0	0-8	4.5	**PA25SAG6S063S**	2.05
DN32	1-1/4"	31	80	24.0	0-11	4	**PA32SAG7S080S**	3.82
DN40	1-1/2"	35	80	32.0	0-8	4	**PA40SAG8S080S**	4.07
			100	32.0	0-16	4	**PA40SAG8S100S**	4.61
DN50	2"	45	100	50.0	0-9	4	**PA50SAG9S100S**	5.16

304 Stainless Steel Actuators with 316L Stainless Steel Bodies

Size	Port Size	Orifice mm	Actuator mm	KV m^3/h	Operating Pressure Differential bar	Minimum Pilot Control Pressure bar	Order code	Weight Kg
DN10	3/8"	13	50	4.7	0-16	4.5	**PA10SAG3R050S**	1.01
DN15	1/2"	13	50	4.7	0-16	4.5	**PA15SAG4R050S**	1.03
DN20	3/4"	18	50	9.0	0-10	4.5	**PA20SAG5R050S**	1.06
DN25	1"	24	63	16.0	0-8	4.5	**PA25SAG6R063S**	2.05
DN32	1-1/4"	31	80	24.0	0-11	4	**PA32SAG7R080S**	3.82
DN40	1-1/2"	35	80	32.0	0-8	4	**PA40SAG8R080S**	4.07
			100	32.0	0-16	4	**PA40SAG8R100S**	4.61
DN50	2"	45	100	50.0	0-9	4	**PA50SAG9R100S**	5.16

Flow Diagram

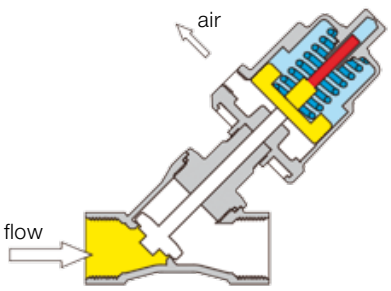

Valve Closed

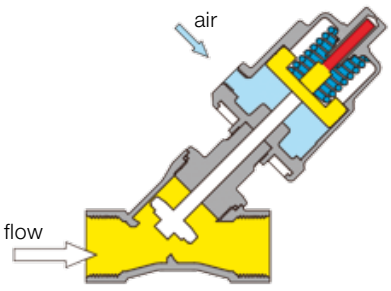

Valve Open

PA Series - Normally Closed Valves
Flow Direction UNDER Seat
Anti Water Hammer Construction

Model Numbers Shown are BSP threads



Aluminium Actuators with 304 Stainless Steel Bodies

Size	Port Size	Orifice mm	Actuator mm	KV m^3/h	Operating Pressure Differential bar	Minimum Pilot Control Pressure bar	Order code	Weight Kg
DN10	3/8"	13	50	4.7	0-16	4.5	**PA10SAG3S050A**	0.75
DN15	1/2"	13	50	4.7	0-16	4.5	**PA15SAG4S050A**	0.80
DN20	3/4"	18	50	9.0	0-10	4.5	**PA20SAG5S050A**	0.90
DN25	1"	24	63	16.0	0-8	4.5	**PA25SAG6S063A**	1.65
DN32	1-1/4"	31	80	24.0	0-11	4	**PA32SAG7S080A**	2.80
DN40	1-1/2"	35	80	32.0	0-8	4	**PA40SAG8S080A**	3.10
			100	32.0	0-16	4	**PA40SAG8S100A**	4.15
DN50	2"	45	100	50.0	0-9	4	**PA50SAG9S100A**	4.75

Aluminium Actuators with 316L Stainless Steel Bodies

Size	Port Size	Orifice mm	Actuator mm	KV m^3/h	Operating Pressure Differential bar	Minimum Pilot Control Pressure bar	Order code	Weight Kg
DN10	3/8"	13	50	4.7	0-16	4.5	**PA10SAG3R050A**	0.75
DN15	1/2"	13	50	4.7	0-16	4.5	**PA15SAG4R050A**	0.80
DN20	3/4"	18	50	9.0	0-10	4.5	**PA20SAG5R050A**	0.90
DN25	1"	24	63	16.0	0-8	4.5	**PA25SAG6R063A**	1.65
DN32	1-1/4"	31	80	24.0	0-11	4	**PA32SAG7R080A**	2.80
DN40	1-1/2"	35	80	32.0	0-8	4	**PA40SAG8R080A**	3.10
			100	32.0	0-16	4	**PA40SAG8R100A**	4.15
DN50	2"	45	100	50.0	0-9	4	**PA50SAG9R100A**	4.75

Control Pressure & Operating Pressure

Charts do not apply for Valves with flow direction Under Seat. A minimum pressure as noted above is all that is required, up to a maximum of 10 bar.

Flow Diagram

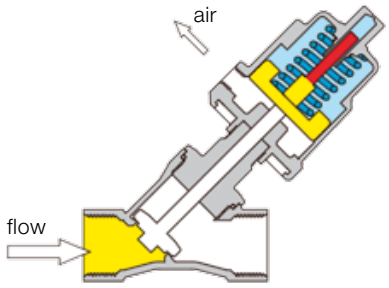

Valve Closed

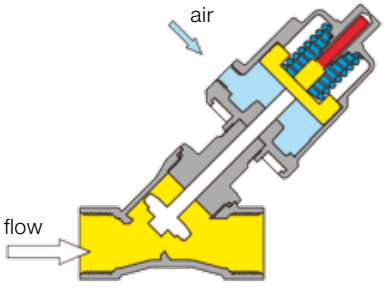

Valve Open

Tel: +45 63 12 83 00 | Email: ps@hymatik.com | www.hymatik.com | Hvidkaervej 27a, DK-5250 Odense SV, Denmark

PA Series - Compact Design Normally Closed Valves
Flow Direction OVER Seat

Model Numbers Shown are BSP threads



Media Temperature - 10°C to + 100°C

304 Stainless Steel Actuators with 304 Stainless Steel Bodies

Size	Port Size	Orifice mm	Actuator mm	KV m^3/h	Operating Pressure Differential bar	Minimum Pilot Control Pressure Range bar	Order code	Weight Kg
DN10	3/8"	13	32	4.7	0-16	4.5-6	**PA10C3G3S032S**	0.58
DN15	1/2"	13	32	4.7	0-16	4.5-6	**PA15C3G4S032S**	0.60
DN20	3/4"	15	32	5.4	0-14	4.5-6	**PA20C3G5S032S**	0.65

304 Stainless Steel Actuators with 316L Stainless Steel Bodies

Size	Port Size	Orifice mm	Actuator mm	KV m^3/h	Operating Pressure Differential bar	Minimum Pilot Control Pressure Range bar	Order code	Weight Kg
DN10	3/8"	13	32	4.7	0-16	4.5-6	**PA10C3G3R032S**	0.58
DN15	1/2"	13	32	4.7	0-16	4.5-6	**PA15C3G4R032S**	0.60
DN20	3/4"	15	32	5.4	0-14	4.5-6	**PA20C3G5R032S**	0.65

Media Temperature - 10°C to + 180°C

304 Stainless Steel Actuators with 304 Stainless Steel Bodies

Size	Port Size	Orifice mm	Actuator mm	KV m^3/h	Operating Pressure Differential bar	Minimum Pilot Control Pressure Range bar	Order code	Weight Kg
DN10	3/8"	13	32	4.7	0-16	4.5-6	**PA10C1G3S032S**	0.63
DN15	1/2"	13	32	4.7	0-16	4.5-6	**PA15C1G4S032S**	0.65
DN20	3/4"	15	32	5.4	0-14	4.5-6	**PA20C1G5S032S**	0.71

304 Stainless Steel Actuators with 316L Stainless Steel Bodies

Size	Port Size	Orifice mm	Actuator mm	KV m^3/h	Operating Pressure Differential bar	Minimum Pilot Control Pressure Range bar	Order code	Weight Kg
DN10	3/8"	13	32	4.7	0-16	4.5-6	**PA10C1G3R032S**	0.63
DN15	1/2"	13	32	4.7	0-16	4.5-6	**PA15C1G4R032S**	0.65
DN20	3/4"	15	32	5.4	0-14	4.5-6	**PA20C1G5R032S**	0.71

Control Pressure & Operating Pressure

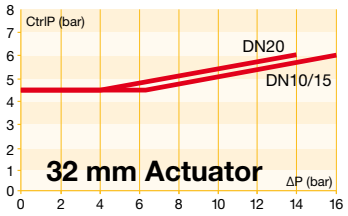

Flow Diagram

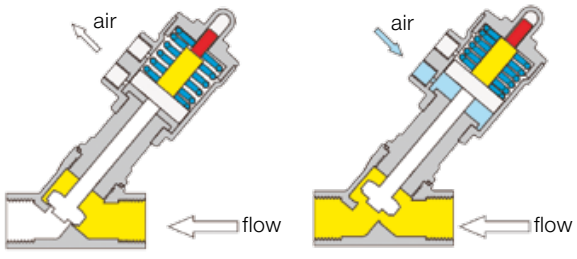

Valve Closed Valve Open

Parker Hannifin Corporation
Pneumatic Division - Europe

Tel: +45 63 12 83 00 | Email: ps@hymatik.com | www.hymatik.com | Hvidkaervej 27a, DK-5250 Odense SV, Denmark

PA Series - Compact Design Normally Closed Valves
Flow Direction UNDER Seat

Model Numbers Shown are BSP threads



Media Temperature - 10°C to + 100°C

304 Stainless Steel Actuators with 304 Stainless Steel Bodies

Size	Port Size	Orifice mm	Actuator mm	KV m^3/h	Operating Pressure Differential bar	Minimum Pilot Control Pressure Range bar	Order code	Weight Kg
DN10	3/8"	13	32	4.7	0-6	5-6	**PA10C4G3S032S**	0.58
DN15	1/2"	13	32	4.7	0-6	5-6	**PA15C4G4S032S**	0.60
DN20	3/4"	15	32	5.4	0-4	5-6	**PA20C4G5S032S**	0.65

304 Stainless Steel Actuators with 316L Stainless Steel Bodies

Size	Port Size	Orifice mm	Actuator mm	KV m^3/h	Operating Pressure Differential bar	Minimum Pilot Control Pressure Range bar	Order code	Weight Kg
DN10	3/8"	13	32	4.7	0-6	5-6	**PA10C4G3R032S**	0.58
DN15	1/2"	13	32	4.7	0-6	5-6	**PA15C4G4R032S**	0.60
DN20	3/4"	15	32	5.4	0-4	5-6	**PA20C4G5R032S**	0.65

Media Temperature - 10°C to + 180°C

304 Stainless Steel Actuators with 304 Stainless Steel Bodies

Size	Port Size	Orifice mm	Actuator mm	KV m^3/h	Operating Pressure Differential bar	Minimum Pilot Control Pressure Range bar	Order code	Weight Kg
DN10	3/8"	13	32	4.7	0-6	5-6	**PA10C2G3S032S**	0.63
DN15	1/2"	13	32	4.7	0-6	5-6	**PA15C2G4S032S**	0.65
DN20	3/4"	15	32	5.4	0-4	5-6	**PA20C2G5S032S**	0.71

304 Stainless Steel Actuators with 316L Stainless Steel Bodies

Size	Port Size	Orifice mm	Actuator mm	KV m^3/h	Operating Pressure Differential bar	Minimum Pilot Control Pressure Range bar	Order code	Weight Kg
DN10	3/8"	13	32	4.7	0-6	5-6	**PA10C2G3R032S**	0.63
DN15	1/2"	13	32	4.7	0-6	5-6	**PA15C2G4R032S**	0.65
DN20	3/4"	15	32	5.4	0-4	5-6	**PA20C2G5R032S**	0.71

Control Pressure & Operating Pressure

Charts do not apply for Valves with flow direction Under Seat. A minimum pressure as noted above is all that is required, up to 10 bar maximum.

Flow Diagram

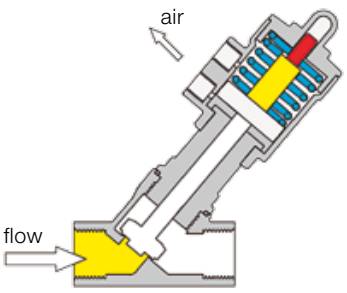

Valve Closed

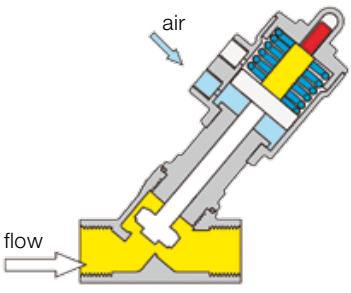

Valve Open

Parker Hannifin Corporation
Pneumatic Division - Europe

Tel: +45 63 12 83 00 | Email: ps@hymatik.com | www.hymatik.com | Hvidkaervej 27a, DK-5250 Odense SV, Denmark

PA Series - Drawings and Dimensions

Stainless Steel Actuators Sizes 40, 50, 63, 80, 100 mm

Type	Actuator	D	R	P	K1	A1	G	L	T		SW
DN10	40	50.5	27	G1/8	116	121	G3/8	60	10	22	hexagon
	50	62	34	G1/8	130	133	G3/8	60	10	22	hexagon
DN15	40	50.5	27	G1/8	118	124	G1/2	65	11.5	25	hexagon
	50	62	34	G1/8	131	135	G1/2	65	11.5	25	hexagon
DN 20	50	62	34	G1/8	134	141	G3/4	75	14	31	hexagon
DN25	50	62	34	G1/8	141	153	G1	90	15	39	hexagon
	63	77	41.5	G1/8	164	175	G1	90	15	39	hexagon
DN32	63	77	41.5	G1/8	170	188	G1-1/4	110	18	50	octagon
	80	98	52	G1/4	184	205	G1-1/4	110	18	50	octagon
DN40	63	77	41.5	G1/8	181	201	G1-1/2	120	18	56	octagon
	80	98	52	G1/4	195	217	G1-1/2	120	18	56	octagon
	100	121	63	G1/4	213	235	G1-1/2	120	18	56	octagon
DN50	63	77	41.5	G1/8	189	216	G2	150	22	68	octagon
	80	98	52	G1/4	203	233	G2	150	22	68	octagon
	100	121	63	G1/4	221	250	G2	150	22	68	octagon
DN65	100	121	63	G1/4	248	285	G2-1/2	180	25	85	octagon

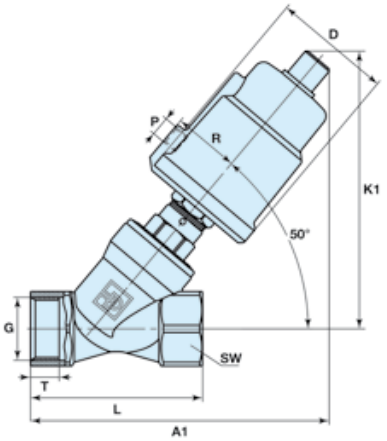

Aluminum Actuators Sizes 50, 63, 80, 100 mm

Type	Actuator	D	R	P	K1	A1	G	L	T		SW
DN10	50	61	38	G1/8	132	141	G3/8	60	10	22	hexagon
DN15	50	61	38	G1/8	133	144	G1/2	65	11.5	25	hexagon
DN20	50	61	38	G1/8	136	150	G3/4	75	14	31	hexagon
DN25	50	61	38	G1/8	144	162	G1	90	15	39	hexagon
	63	75	45	G1/8	167	183	G1	90	15	39	hexagon
DN32	63	75	45	G1/8	173	196	G1-1/4	110	18	50	octagon
	80	94	54	G1/4	192	214	G1-1/4	110	18	50	octagon
DN40	63	75	45	G1/8	184	209	G1-1/2	120	18	56	octagon
	80	94	54	G1/4	203	226	G1-1/2	120	18	56	octagon
	100	115	64	G1/4	223	245	G1-1/2	120	18	56	octagon
DN50	63	75	45	G1/8	192	224	G2	150	22	68	octagon
	80	94	54	G1/4	211	242	G2	150	22	68	octagon
	100	115	64	G1/4	231	260	G2	150	22	68	octagon
DN65	100	115	64	G1/4	257	294	G2-1/2	180	25	85	octagon

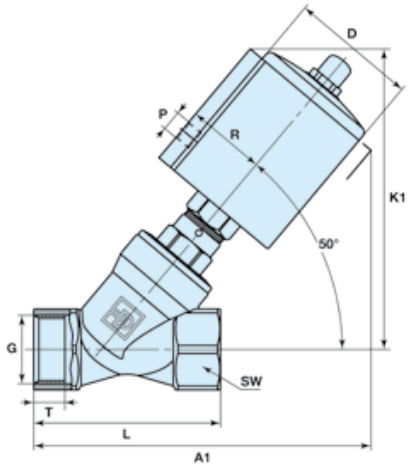

Stainless Steel Actuators Size 32 mm

Type	Actuator	Ø B	R	G1	K2		A2		G	L	T		SW
					Type C1/C2 (180°C)	Type C3/C4 (100°C)	Type C1/C2 (180°C)	Type C3/C4 (100°C)					
DN10	32	39.6	27	G1/8	107	94	117	106	G3/8	60	10	22	hexagon
DN15	32	39.6	27	G1/8	109	96	119	108	G1/2	65	11.5	25	hexagon
DN20	32	39.6	27	G1/8	112	100	126	115	G3/4	75	14	31	hexagon

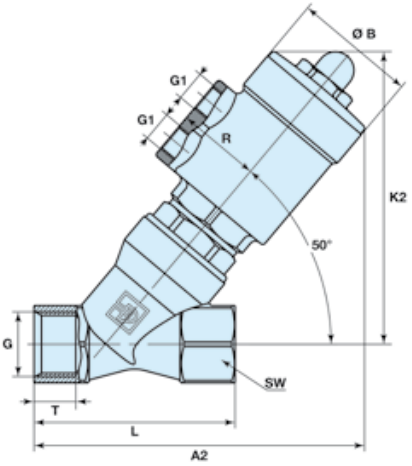

Parker Hannifin Corporation
Pneumatic Division - Europe

Tel: +45 63 12 83 00 | Email: ps@hymatik.com | www.hymatik.com | Hvidkaervej 27a, DK-5250 Odense SV, Denmark

PDE2600PNUK

Parker Pneumatic

Solenoid Valves for Controlling the PA Angle Seat Valves

3 Way Direct Acting Pilot Control Valves

Banjo Valve - Available as Separate Components

Banjo Valves G1/4" & G1/8" Series with Aluminium Body

Solenoid Operated Versions - B14-B04 Versions with 22 mm Coil

Port Size		Orifice	Q_N	Admissible differential pressure (bar) max.			Max. admissible fluid temperature (°C) Min. = - 10°C	Seat disc	Reference number			Consumption Power (Watt)		Weight (g)	Dim. Ref.
Banjo	G	mm	l/min	min	DC=	AC~	Air & Neutral gases		Valve	Housing	Coil	DC	AC		
3/2 Solenoid operated - Spring return (monostable)															
1/8	1/8	1.2	50	0	10	10	50	NBR	131B14	-	496131	3	3	140	26
1/8	1/8	1.2	50	0	10	10	50	NBR	131B14	-	496482	3	3	150	26
1/8	1/8	1.2	50	0	10	10	50	NBR	131B14	-	496637	3	3	150	26
1/8	1/8	1.2	50	0	10	-	50	NBR	131B14	-	482605	5	-	170	26
3/2 Solenoid operated - Spring return (monostable)															
1/4	1/8	1.2	50	0	10	10	50	NBR	131B04	-	496131	3	3	160	27
1/4	1/8	1.2	50	0	10	10	50	NBR	131B04	-	496482	3	3	175	27
1/4	1/8	1.2	50	0	10	10	50	NBR	131B04	-	496637	3	3	175	27
1/4	1/8	1.2	50	0	10	-	50	NBR	131B04	-	482605	5	-	190	27

Dimensions Reference 26

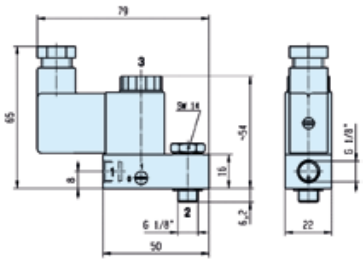

Dimensions Reference 27

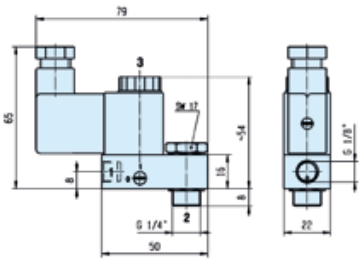



Coils 22 mm for Banjo Valves Series

These coils with connection for 2 P+G DIN 43650 B plug are encapsulated in synthetic material, conform to the IEC/CENELEC safety standards and comply with European low voltage directive 2006/95/EC. Banjo Valve bodies conform to the terms of the directive 94/9/CE specific to non electrical equipment for use within potentially explosive environments - Please select apropriate Coil for Safe Area or ATEX zones 1/21 or 2/22 in the following table.

- Power: 3 W or 5 W
- Insulation Class: F (155°C)
- Degree of Protection: IP65 (with plug)
- Duty Cycle: 100% ED

Available Voltages	Safe area without DIN plug Code	Safe area with DIN plug Code	For Zone 2/22 II 3 G-Ex nc AC IIC T5 II 3 D-Ex tc AC IIIC - T 95°C code with DIN plug	For Zone 1/21 II 2 G-Ex mb II T4 II 2 D-Ex tb IIIC - T 130°C code includes DIN plug and 1.5 m cable
12 VDC	**496131 C1**	**496482 C1**	**496637 C1**	**482605 C1**
24 VDC	**496131 C2**	**496482 C2**	**496637 C2**	**482605 C2**
48 VDC	**496131 C4**	**496482 C4**	**496637 C4**	**-**
110 VDC	**496131 C5**	**496482 C5**	**496637 C5**	**-**
24/50-60 VAC	**496131 P0**	**496482 P0**	**496637 P0**	**-**
48/50-60 VAC	**496131 S4**	**496482 S4**	**496637 S4**	**-**
110/50-60 VAC	**496131 P2**	**496482 P2**	**496637 P2**	**-**
115/60 VAC	**496131 K8**	**496482 K8**	**496637 K8**	**-**
230/50-60 VAC	**496131 P9**	**496482 P9**	**496637 P9**	**-**

How to Order

Valve Reference Number - Coil Reference - Voltage code = Order code

Example: 131B14 - 496131 C2 - Valves and coils may be ordered also separately.

Highly accurate units, suitable for applications such as instrumentation where precision regulation is required.

- High repeatability
- High relief capacity on R220 model
- High flow capacity on R230 model



Operating information

Max operating pressure	10 bar
Max operating temperature	66°C
Repeatability:	R210 model 0.3 mbar
	R220 model 0.3 mbar
	R230 model 0.6 mbar

For more information see www.parker.com/euro_pneumatic

	Port size	Reduced Pressure range	Flow l/min	Relief capacity l/min	**Order code**
	G1/4	0.13 - 2.7	396	57	**R210G02A**
	G1/4	0.13 - 8.1	396	57	**R210G02C**
	G1/4	0.13 - 8.1	396	282	**R220G02C**
	G1/4	0 - 0.13	2280	114	**R230G02E**
	G1/4	0 - 2	2280	114	**R230G02B**
	G1/4	0.13 - 4	2280	114	**R230G02C**
	G1/4	0.13 - 10	2280	114	**R230G02D**

Mounting brackets

Series	**Order code**
R210 / R220	**446-707-045**
R230	**446-707-025**

Dimensions (mm)

R210 / 220 High Precision Regulator

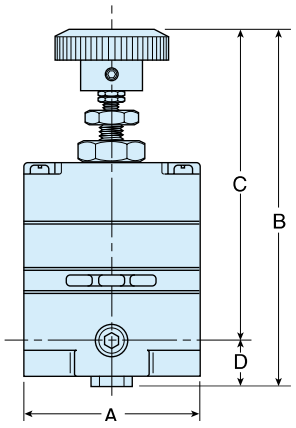

A	C	D	E
52mm	110mm	97mm	13.5mm

R230 High Flow Precision Regulator

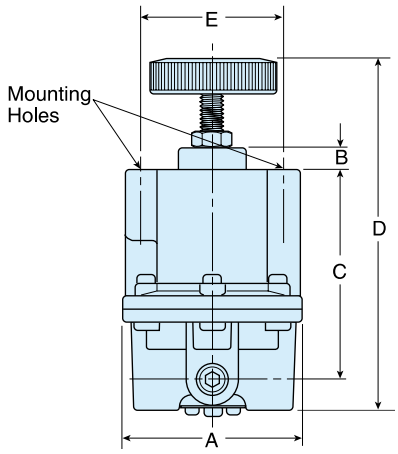

A	B	C	D	E
76mm	10mm	86mm	154mm	57mm

Mounting bracket - 446-707-045

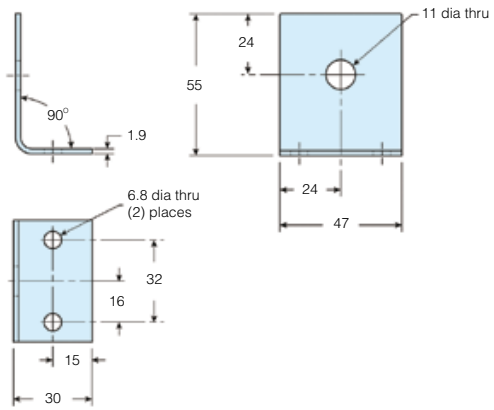

Mounting bracket - 446-707-025

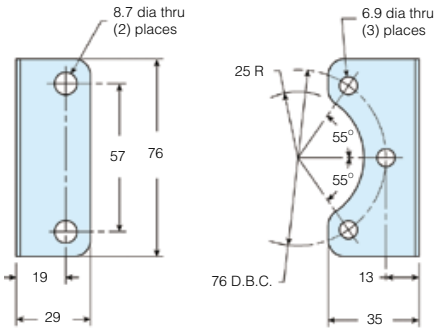

Tel: +45 63 12 83 00 | Email: ps@hymatik.com | www.hymatik.com | Hvidkaervej 27a, DK-5250 Odense SV, Denmark

- Compact body ported units
- Port sizes G1/8 and G1/4
- Unique deflector plate ensuring maximum water and particulate removal
- Solid control piston with lip seal for extended life.
- Proportional oil delivery over a wide range of air flows.



Operating information

Working pressure:	Max 10 bar
Working temperature:	0 °C to +52 °C

Flow characteristics

Flow	Filter	11 l/s
	Regulator	9,3 l/s
	Filter Regulator	9,3 l/s
	Lubricator	10 l/s

For more information see www.parker.com/euro_pneumatic

Filters - 5 micron element, transparent bowl

Port size	Description	Order Code
G1/8	Manual drain	**14F01BB1**
G1/8	Auto drain	**14F05BB1**
G1/4	Manual drain	**14F11BB1**
G1/4	Auto drain	**14F15BB1**
	Mounting bracket	**PS417BP**

Regulators - relieving type - non relieving options available

Port size	Description	Order Code
G1/8	2 bar	**14R010FC1**
G1/8	4 bar	**14R011FC1**
G1/8	8 bar	**14R013FC1**
G1/4	2 bar	**14R110FC1**
G1/4	4 bar	**14R111FC1**
G1/4	8 bar	**14R113FC1**
	Mounting bracket (Includes panel mounting nut)	**PS417BP**

Lubricators - transparent bowl

Port size	Order Code
G1/8	**04L00GB1**
G1/4	**04L10GB1**
Mounting bracket	**PS419**

Pressure Gauges

	Order Code
0 - 2 bar	**P3D-KAB1AYN**
0 - 4 bar	**P3D-KAB1ALN**
0 - 8 bar	**P3D-KAB1ANN**

Coalescing Filters - 0.01 micron element

Port size	Description	Order Code
Poly bowl		
G1/8	Manual drain	**10F01ED1**
G1/8	Auto drain	**10F05ED1**
G1/4	Manual drain	**10F11ED1**
G1/4	Auto drain	**10F15ED1**
	Mounting bracket	**PS417BP**

Filter/Regulators

- transparent bowl - 2 and 4 bar and non relieving options available

Port size	Description	Order Code
G1/8	2 bar, manual drain	**14E01B10FC1**
G1/8	2 bar, auto drain	**14E05B10FC1**
G1/4	2 bar, manual drain	**14E11B10FC1**
G1/4	2 bar, auto drain	**14E15B10FC1**
G1/8	4 bar, manual drain	**14E01B11FC1**
G1/8	4 bar, auto drain	**14E05B11FC1**
G1/4	4 bar, manual drain	**14E11B11FC1**
G1/4	4 bar, auto drain	**14E15B11FC1**
G1/8	8 bar, manual drain	**14E01B13FC1**
G1/8	8 bar, auto drain	**14E05B13FC1**
G1/4	8 bar, manual drain	**14E11B13FC1**
G1/4	8 bar, auto drain	**14E15B13FC1**
	Mounting bracket (Includes panel mounting nut)	**PS417BP**

Tel: +45 63 12 83 00 | Email: ps@hymatik.com | www.hymatik.com | Hvidkaervej 27a, DK-5250 Odense SV, Denmark

Dimensions (mm)

Filters

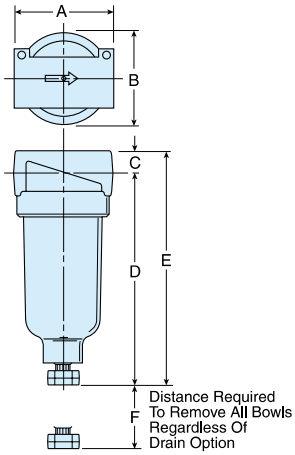

A	B	C	D	D†	E	E†	F
43	39	10	97	99	107	108	41

Coalescing Filters

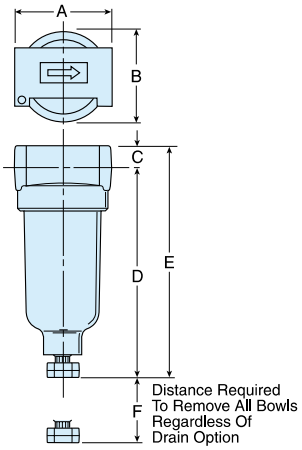

A	B	C	D	D†	E	E†	F
43	39,6	10	97	93	107	103	41

Filter/Regulators

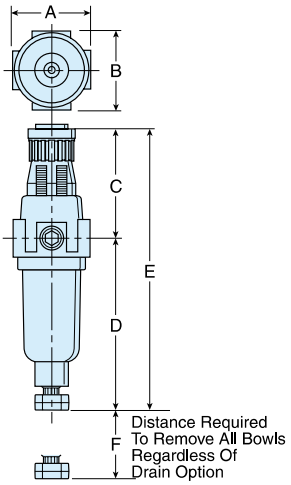

A	B	C	D	D†	E	E†	F
41	40	61	96	92	158	154	41

Regulators

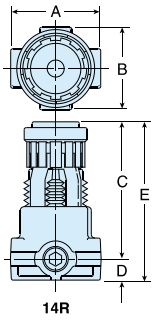

14R

14R	**A**	**B**	**C**	**D**	**E**
	42	40	63,5	10	731
14R****L***	**A**	**B**	**C**	**D**	**E**
	42	40	57,9	10	68

14RM	**A**	**B**	**C**	**D**	**E**	**F**	**G**	**H**	**J**
	38	38	60	13	73	30	15	8	18

Lubricators

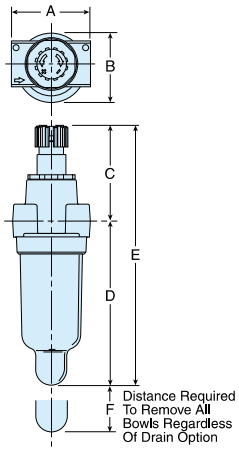

A	B	C	D	D†	E	E†	F
44	40	55	92	96	147	151	41

Mounting Bracket Kits

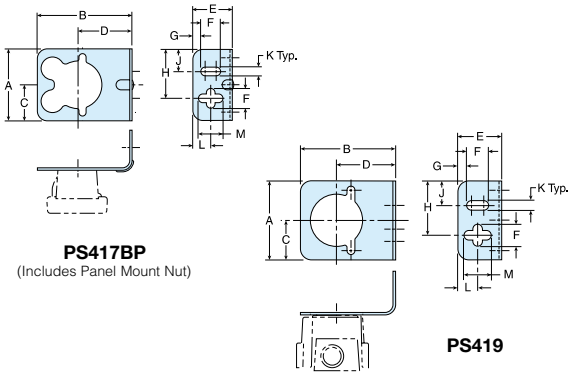

PS417BP
(Includes Panel Mount Nut)

PS419

PS417BP - 10F, 14F, 14R, 14E

A	B	C	D	E	F	G	H	J	K	L	M
46	60	23	34	25	13	5	31	14	6	11	16

PS419 - 04L

A	B	C	D	E	F	G	H	J	K	L	M
46	55	23	34	25	13	5	31	14	6	11	16

Service kits

Description	Order Code
5 micron particulate element	**PS403P**
0.01 micron coalescing element	**PS446P**
Poly bowl with manual drain	**PS404P**
Poly bowl with pulse drain	**PS408BP**
Lubricator bowl	**PS421P**
Regulator	
Relieving type	**PS422P**
Non-relieving type	**PS428P**

Tel: +45 63 12 83 00 | Email: ps@hymatik.com | www.hymatik.com | Hvidkaervej 27a, DK-5250 Odense SV, Denmark

The range of Stainless Steel FRLs are ideal for use in the food industry, the petrochemical or process industries or any application in a particularly harsh or aggressive environment.

- Suitable for Marine & Offshore applications
- Chemical / Petroleum and process industries
- Coalescing filters are designed for removing oil and water aerosols down to 0.01µ
- Suitable for food industry applications



Operating information

Max operating pressure	20 bar 12 bar when fitted with auto-drain	
Max operating temperature	Regulator Filter + Regulator	65°C 80°C,

50°C when fitted with auto-drain

For more information see www.parker.com/euro_pneumatic

Particulate Filter

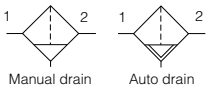

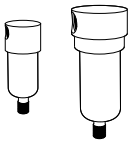

Port size	Flow l/min @ 7 bar	Filter element	Order code with manual drain	Order code with auto drain
G1/4	660	20µ	**PF504G02DHSS**	
G1/2	1800	40µ	**PF10G04DJSS**	**PF10G04DJRSS**

* For 5µ filter element substitute **H** or **J** with **G**

Coalescing Filter

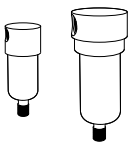

Port size	Flow l/min @ 7 bar	Filter element	Order code with manual drain	Order code with auto drain
G1/4	240	0.3µ	**PF501G02DHSS**	
G1/2	480	0.01µ	**PF11G04DJSS**	**PF11G04DJRSS**

Regulator

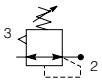



Port size	Flow l/min @ 7 bar	Order code fitted with 0-8.5 bar spring
G1/4 Plastic bonnet/knob	450	**PR364G02CSS**
Full S/S version		**PR354G02CSS**
G1/2 Plastic bonnet/knob	2820	**PR10G04CSS**
Full S/S version		**PR11G04CSS**

Lubricator



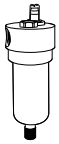

Port size	Flow l/min @ 7 bar	Order code
G1/2	3000	**PL10G04DSS**

Filter/Regulator

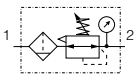

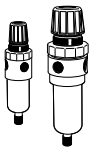

Port size	Flow l/min @ 7 bar	Order code fitted with 0-8.5 bar spring
G1/4 Plastic bonnet/knob	450	**PB548G02DHCSS**
Full S/S version		**PB558G02DHCSS**
G1/2 Plastic bonnet/knob	1800	**PB11G04DJCSS**
Full S/S version		**PB12G04DJCSS**

Panel mounting nut for G1/4: **PR05X51SS**
G1/2: **PR10X51SS**

Connectors



Port size	Order code
G1/4	**AC-2SS**
G1/2	**AC-4SS**

Stainless steel pressure gauge	**M1/4G40S-10 (0 to 10 bar)**

Tel: +45 63 12 83 00 | Email: ps@hymatik.com | www.hymatik.com | Hvidkaervej 27a, DK-5250 Odense SV, Denmark

Dimensions (mm) - 1/4"

Filters
Coalescing Filters

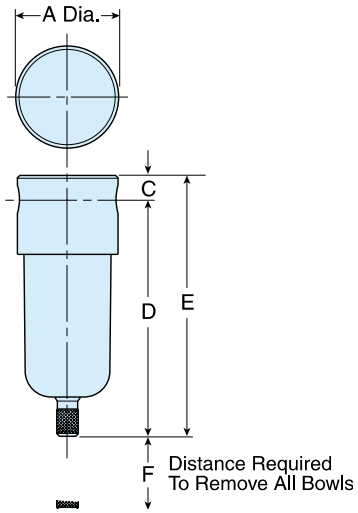

A	C	D	E	F
40mm	8mm	94mm	102mm	40mm

Filter/Regulators

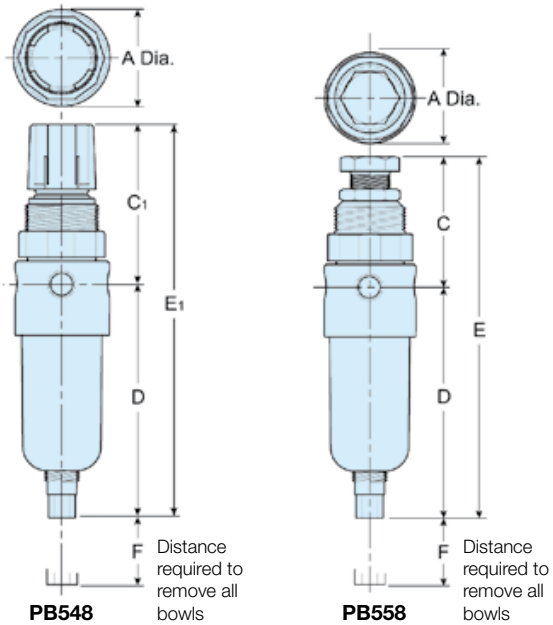

A	C	C1	D	E	E1	F
40mm	55mm	67mm	92mm	78mm	147mm	40mm

Regulators

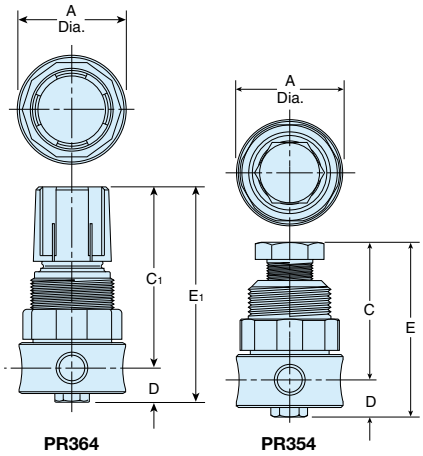

A	C	C1	D	E	E1
40mm	51mm	65mm	13mm	64mm	78mm

Service kits

Port size	Description	Order Code
Filter		
1/4	20 micron particulate element	**EK504Y**
1/4	5 micron particulate element	**EK504VY**
1/2	40 micron particulate element	**EK55J**
1/2	5 micron particulate element	**EK55G**
Coalescing Filter		
1/4	0.3 micron coalescing element	**EKF501H**
1/2	0.01 micron coalescing element	**EKF71**
Regulator		
1/4	Relieving type	**RKR364YSS**
1/4	Non-relieving type	**RKR36KYSS**
1/2	Relieving type	**RKR10YSS**
1/2	Non-relieving type	**RKR10KYSS**
Filter/Regulator		
1/4	20 micron particulate element	**EK504Y**
1/4	5 micron particulate element	**EK504VY**
1/2	40 micron particulate element	**EKF10Y**
1/2	5 micron particulate element	**EKF10VY**
Lubricator		
	Sight dome kit	**RKL10SS**

Tel: +45 63 12 83 00 | Email: ps@hymatik.com | www.hymatik.com | Hvidkaervej 27a, DK-5250 Odense SV, Denmark

Dimensions (mm) - 1/2"

Filters
Coalescing Filters

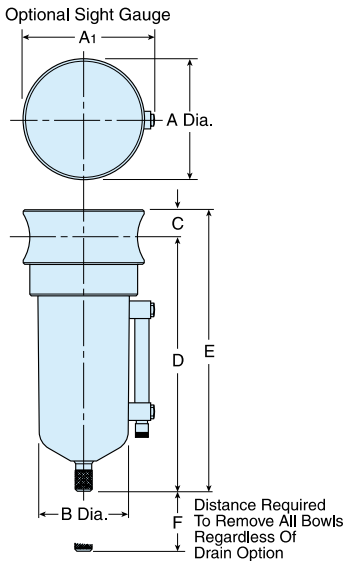

A	A1	B	C	D	E	F
60mm	64mm	44mm	14mm	127mm	141mm	54mm

Regulators

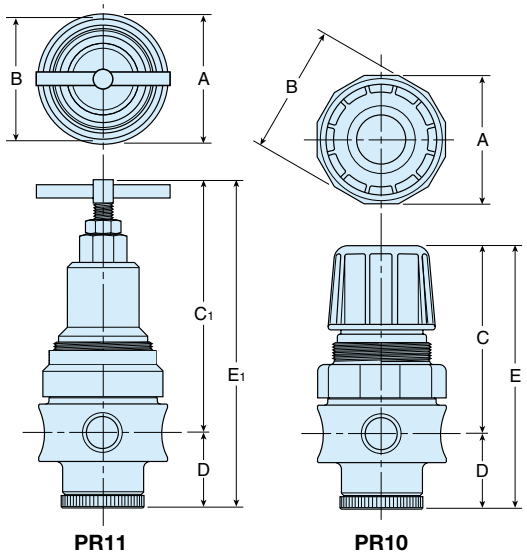

A	B	C	C1	D	E	E1
60mm	62mm	91mm	119mm	35mm	126mm	154mm

Filter/Regulators

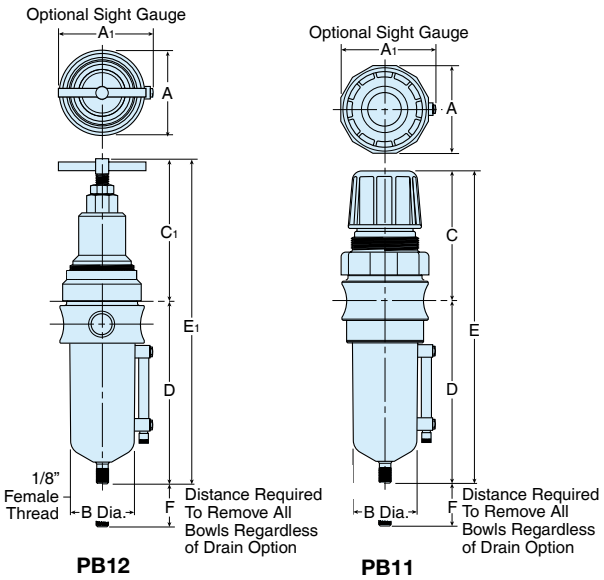

A	A1	B	C	C1	D	E	E1	F
60mm	64mm	44mm	91mm	119mm	127mm	218mm	246mm	54mm

Lubricators

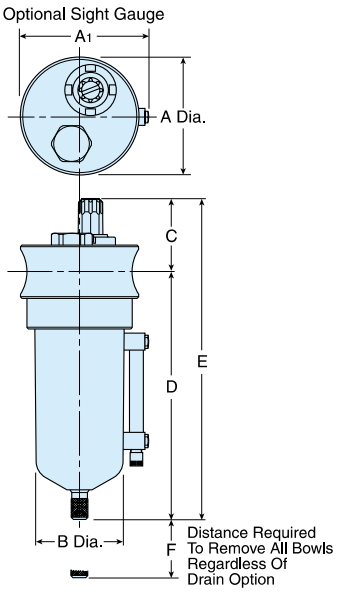

A	A1	B	C	D	E	F
60mm	64mm	44mm	46mm	127mm	173mm	89mm

Tel: +45 63 12 83 00 | Email: ps@hymatik.com | www.hymatik.com | Hvidkaervej 27a, DK-5250 Odense SV, Denmark

High Efficiency 0.01 µm Filtration

Fitration Grade

Filtration type	Coalescing
Particle removal (inc water & oil aerosols)	Down to 0.01 micron
Max remaining oil content at 21°C	0.01 mg/m³ 0.01 ppm(w)
Filter efficiency	99.9999%
Test methods used	ISO 8573.2 ISO 8573.4 ISO 12500-1
ISO 12500-1 Inlet Challenge concentration	10 mg/m³
Initial dry differential pressure	<140 mbar (2psi)
Initial saturated differential pressure	<200 mbar (3psi)
Change element every	12 months
Precede with filtration grade	1 micron Moduflex Coalescer



Product selection

Stated flows are for operation at 7 bar (g) with reference to 20°C, 1 bar (a), 0% relative water vapour pressure. For flows at other pressures apply the correction factors shown.

Port Size BSPT	Part Number	dm³/s	m3/hr	cfm	0.01 µm Replacement Element Kit
1/4"	**P3TFA22CAAN**	10	36	21	**P3TKA00ESCA**
3/8"	**P3TFA23CBAN**	20	72	42	**P3TKA00ESCB**
1/2"	**P3TFA24CCAN**	30	108	64	**P3TKA00ESCC**
3/4"	**P3TFA26CDAN**	60	216	127	**P3TKA00ESCD**
1 "	**P3TFA28CEAN**	110	396	233	**P3TKA00ESCE**
1.1/4"	**P3TFA2ACEAN**	110	396	233	**P3TKA00ESCE**
1.1/2"	**P3TFA2BCFAN**	160	576	339	**P3TKA00ESCF**
1.1/2"	**P3TFA2BCGAN**	220	792	466	**P3TKA00ESCG**
2"	**P3TFA2CCHAN**	330	1188	699	**P3TKA00ESCH**
2.1/2"	**P3TFA2DCJAN**	430	1548	911	**P3TKA00ESCJ**
3"	**P3TFA2ECJAN**	430	1548	911	**P3TKA00ESCJ**
2.1/2"	**P3TFA2DCKAN**	620	2232	1314	**P3TKA00ESCK**
3"	**P3TFA2ECKAN**	620	2232	1314	**P3TKA00ESCK**

Correction factors

Line pressure bar g	Line pressure psi g	Correction factor
1	15	0.38
2	29	0.53
3	44	0.65
4	58	0.76
5	73	0.85
6	87	0.93
7	100	1.00
8	116	1.07
9	131	1.13
10	145	1.19
11	160	1.25
12	174	1.31
13	189	1.36
14	203	1.41
15	218	1.46
16	232	1.51

To find the correction factor for 8.5 bar g (122psi g) =

$$\sqrt{\frac{\text{System Operating Pressure}}{\text{Nominal Pressure}}}$$

$$= \sqrt{\frac{8.5 \text{ bar g}}{7 \text{ bar g}}} = 1.10$$

Filter selection example

Selecting a filter model to match a system flow rate and pressure.
Example: System flow 1050 m³/hr at a pressure of 8.5 bar g

1. Obtain pressure correction factor from table or calculate factor using method shown. Correction factor for 8.5 bar g = 1.10
2. Divide system flow by correction factor to give equivalent flow rate at 7 bar g 1050m³/hr ÷ 1.10 = 955 m³/hr (at 7 bar g)
3. Select a filter model from the above table with a flow rate above or equal to 955 m³/hr. Filter model selected : P3TFA2CCHAN
4. Select pipe connection & Thread type System uses 2" piping and BSP threads: Model P3TFA2CCHAN

Parker Hannifin Corporation
Pneumatic Division - Europe

Tel: +45 63 12 83 00 | Email: ps@hymatik.com | www.hymatik.com | Hvidkaervej 27a, DK-5250 Odense SV, Denmark

High Efficiency 0.01 µm Filtration

Technical data

Filter Grade	Drain type	Max operating pressure bar g	Max operating pressure psi g	Max recommended operating temp.		Min recommended operating temp.	
0.01 micron	Auto	16	232	80°C	176°F	1.5°C	35°F

Weights and dimensions

Port Size BSPT	Part Number	A mm	A ins	B mm	B ins	C mm	C ins	D mm	D ins	E mm	E ins	F mm	F ins	G mm	G ins	Weight kg	Weight lbs	Modular Connection Kit	Wall Mounting Bracket Kit
1/4"	**P3TFA22CAAN**	76.0	3.0	181.5	7.2	153.0	6.0	18.0	0.71	24.5	0.96	30.0	1.18	52.0	2.05	0.4	0.9	**P3TKA00CBA**	**P3TKA00MWA**
3/8"	**P3TFA23CBAN**	97.5	3.8	235.0	9.3	201.0	7.9	20.5	0.81	25.5	1.00	40.0	1.57	60.0	2.36	1.0	2.2	**P3TKA00CBB**	**P3TKA00MWB**
1/2"	**P3TFA24CCAN**	97.5	3.8	235.0	9.3	201.0	7.9	20.5	0.81	25.5	1.00	40.0	1.57	60.0	2.36	1.0	2.2	**P3TKA00CBB**	**P3TKA00MWB**
3/4"	**P3TFA26CDAN**	129.0	5.1	275.0	10.8	232.5	9.2	23.0	0.91	28.0	1.10	60.0	2.36	68.0	2.68	2.2	4.8	**P3TKA00CBD**	**P3TKA00MWD**
1 "	**P3TFA28CEAN**	129.0	5.1	364.5	14.3	322.0	12.7	23.0	0.91	28.0	1.10	60.0	2.36	68.0	2.68	2.6	5.7	**P3TKA00CBD**	**P3TKA00MWD**
1.1/4"	**P3TFA2ACEAN**	129.0	5.1	364.5	14.3	322.0	12.7	23.0	0.91	28.0	1.10	60.0	2.36	68.0	2.68	2.6	5.7	**P3TKA00CBD**	**P3TKA00MWD**
1.1/2"	**P3TFA2BCFAN**	170.0	6.7	432.5	17.0	382.5	15.1	32.0	1.26	39.0	1.54	84.0	3.31	92.0	3.62	4.5	9.9	**P3TKA00CBF**	**P3TKA00MWF**
1.1/2"	**P3TFA2BCGAN**	170.0	6.7	524.5	20.6	474.5	18.7	32.0	1.26	39.0	1.54	84.0	3.31	92.0	3.62	5.3	11.6	**P3TKA00CBF**	**P3TKA00MWF**
2"	**P3TFA2CCHAN**	170.0	6.7	524.5	20.6	474.5	18.7	32.0	1.26	39.0	1.54	84.0	3.31	92.0	3.62	5.3	11.6	**P3TKA00CBF**	**P3TKA00MWF**
2.1/2"	**P3TFA2DCJAN**	205.0	8.1	641.5	25.3	581.5	22.9	35.5	1.40	42.5	1.67	100.0	3.94	135.0	5.31	10.0	22.0	**P3TKA00CBJ**	**P3TKA00MWJ**
3"	**P3TFA2ECJAN**	205.0	8.1	641.5	25.3	581.5	22.9	35.5	1.40	42.5	1.67	100.0	3.94	135.0	5.31	10.0	22.0	**P3TKA00CBJ**	**P3TKA00MWJ**
2.1/2"	**P3TFA2DCKAN**	205.0	8.1	832.0	32.8	772.0	30.4	35.5	1.40	42.5	1.67	100.0	3.94	135.0	5.31	12.0	26.4	**P3TKA00CBJ**	**P3TKA00MWJ**
3"	**P3TFA2ECKAN**	205.0	8.1	832.0	32.8	772.0	30.4	35.5	1.40	42.5	1.67	100.0	3.94	135.0	5.31	12.0	26.4	**P3TKA00CBJ**	**P3TKA00MWJ**

Optional Accessories

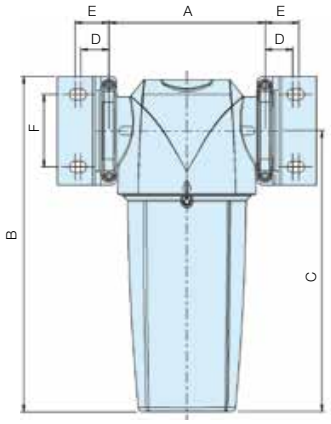

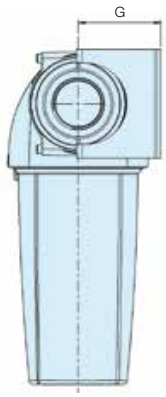



DPI Kit

P3TKA00RQ

Incident Monitor

Used to indicate premature high differential pressure. Indicator can be retrofitted to existing housings without depressurising the system.



Modular Connection Kit

Fixing clamp allows quick and simple connection of multiple filter housings.



Wall Mounting Bracket Kit

Mounting brackets provide additional support to filters installed in flexible piping systems or OEM equipment.

Drain Kits

Auto drain	**P3TKA00DA**
Manual drain	**P3TKA00DM**

1 µm Filtration

Fitration Grade

Filtration type	Coalescing
Particle removal (inc water & oil aerosols)	Down to 1 micron
Max remaining oil content at 21°C	0.06 mg/m³ 0.05 ppm(w)
Filter efficiency	99.925%
Test methods used	ISO 8573.2 ISO 8573.4 ISO 12500-1
ISO 12500-1 Inlet Challenge concentration	40 mg/m³
Initial dry differential pressure	<70 mbar (2psi)
Initial saturated differential pressure	<140 mbar (3psi)
Change element every	12 months
Precede with filtration grade	1 micron Moduflex Coalescer



Product selection

Stated flows are for operation at 7 bar (g) with reference to 20°C, 1 bar (a), 0% relative water vapour pressure. For flows at other pressures apply the correction factors shown.

Port Size BSPT	Part Number	dm³/s	m3/hr	cfm	1 µm Replacement Element Kit
1/4"	**P3TFA229AAN**	10	36	21	**P3TKA00ES9A**
3/8"	**P3TFA239BAN**	20	72	42	**P3TKA00ES9B**
1/2"	**P3TFA249CAN**	30	108	64	**P3TKA00ES9C**
3/4"	**P3TFA269DAN**	60	216	127	**P3TKA00ES9D**
1 "	**P3TFA289EAN**	110	396	233	**P3TKA00ES9E**
1.1/4"	**P3TFA2A9EAN**	110	396	233	**P3TKA00ES9E**
1.1/2"	**P3TFA2B9FAN**	160	576	339	**P3TKA00ES9F**
1.1/2"	**P3TFA2B9GAN**	220	792	466	**P3TKA00ES9G**
2"	**P3TFA2C9HAN**	330	1188	699	**P3TKA00ES9H**
2.1/2"	**P3TFA2D9JAN**	430	1548	911	**P3TKA00ES9J**
3"	**P3TFA2E9JAN**	430	1548	911	**P3TKA00ES9J**
2.1/2"	**P3TFA2D9KAN**	620	2232	1314	**P3TKA00ES9K**
3"	**P3TFA2E9KAN**	620	2232	1314	**P3TKA00ES9K**

Correction factors

Line pressure bar g	Line pressure psi g	Correction factor
1	15	0.38
2	29	0.53
3	44	0.65
4	58	0.76
5	73	0.85
6	87	0.93
7	100	1.00
8	116	1.07
9	131	1.13
10	145	1.19
11	160	1.25
12	174	1.31
13	189	1.36
14	203	1.41
15	218	1.46
16	232	1.51

To find the correction factor for 8.5 bar g (122psi g) =

$$\sqrt{\frac{\text{System Operating Pressure}}{\text{Nominal Pressure}}}$$

$$= \sqrt{\frac{8.5 \text{ bar g}}{7 \text{ bar g}}} = 1.10$$

Filter selection example

Selecting a filter model to match a system flow rate and pressure.
Example: System flow 1050 m³/hr at a pressure of 8.5 bar g

1. Obtain pressure correction factor from table or calculate factor using method shown. Correction factor for 8.5 bar g = 1.10
2. Divide system flow by correction factor to give equivalent flow rate at 7 bar g 1050m³/hr ÷ 1.10 = 955 m³/hr (at 7 bar g)
3. Select a filter model from the above table with a flow rate above or equal to 955 m³/hr. Filter model selected : P3TFA2C9HAN
4. Select pipe connection & Thread type System uses 2" piping and BSP threads: Model P3TFA2C9HAN

Parker Hannifin Corporation
Pneumatic Division - Europe

Tel: +45 63 12 83 00 | Email: ps@hymatik.com | www.hymatik.com | Hvidkaervej 27a, DK-5250 Odense SV, Denmark

1 µm Filtration

Technical data

Filter Grade	Drain type	Max operating pressure bar g	Max operating pressure psi g	Max recommended operating temp.		Min recommended operating temp.	
1 micron	Auto	16	232	80°C	176°F	1.5°C	35°F

Weights and dimensions

Port Size BSPT	Part Number	A mm	A ins	B mm	B ins	C mm	C ins	D mm	D ins	E mm	E ins	F mm	F ins	G mm	G ins	Weight kg	Weight lbs	Modular Connection Kit	Wall Mounting Bracket Kit
1/4"	**P3TFA229AAN**	76.0	3.0	181.5	7.2	153.0	6.0	18.0	0.71	24.5	0.96	30.0	1.18	52.0	2.05	0.4	0.9	**P3TKA00CBA**	**P3TKA00MWA**
3/8"	**P3TFA239BAN**	97.5	3.8	235.0	9.3	201.0	7.9	20.5	0.81	25.5	1.00	40.0	1.57	60.0	2.36	1.0	2.2	**P3TKA00CBB**	**P3TKA00MWB**
1/2"	**P3TFA249CAN**	97.5	3.8	235.0	9.3	201.0	7.9	20.5	0.81	25.5	1.00	40.0	1.57	60.0	2.36	1.0	2.2	**P3TKA00CBB**	**P3TKA00MWB**
3/4"	**P3TFA269DAN**	129.0	5.1	275.0	10.8	232.5	9.2	23.0	0.91	28.0	1.10	60.0	2.36	68.0	2.68	2.2	4.8	**P3TKA00CBD**	**P3TKA00MWD**
1 "	**P3TFA289EAN**	129.0	5.1	364.5	14.3	322.0	12.7	23.0	0.91	28.0	1.10	60.0	2.36	68.0	2.68	2.6	5.7	**P3TKA00CBD**	**P3TKA00MWD**
1.1/4"	**P3TFA2A9EAN**	129.0	5.1	364.5	14.3	322.0	12.7	23.0	0.91	28.0	1.10	60.0	2.36	68.0	2.68	2.6	5.7	**P3TKA00CBD**	**P3TKA00MWD**
1.1/2"	**P3TFA2B9FAN**	170.0	6.7	432.5	17.0	382.5	15.1	32.0	1.26	39.0	1.54	84.0	3.31	92.0	3.62	4.5	9.9	**P3TKA00CBF**	**P3TKA00MWF**
1.1/2"	**P3TFA2B9GAN**	170.0	6.7	524.5	20.6	474.5	18.7	32.0	1.26	39.0	1.54	84.0	3.31	92.0	3.62	5.3	11.6	**P3TKA00CBF**	**P3TKA00MWF**
2"	**P3TFA2C9HAN**	170.0	6.7	524.5	20.6	474.5	18.7	32.0	1.26	39.0	1.54	84.0	3.31	92.0	3.62	5.3	11.6	**P3TKA00CBF**	**P3TKA00MWF**
2.1/2"	**P3TFA2D9JAN**	205.0	8.1	641.5	25.3	581.5	22.9	35.5	1.40	42.5	1.67	100.0	3.94	135.0	5.31	10.0	22.0	**P3TKA00CBJ**	**P3TKA00MWJ**
3"	**P3TFA2E9JAN**	205.0	8.1	641.5	25.3	581.5	22.9	35.5	1.40	42.5	1.67	100.0	3.94	135.0	5.31	10.0	22.0	**P3TKA00CBJ**	**P3TKA00MWJ**
2.1/2"	**P3TFA2D9KAN**	205.0	8.1	832.0	32.8	772.0	30.4	35.5	1.40	42.5	1.67	100.0	3.94	135.0	5.31	12.0	26.4	**P3TKA00CBJ**	**P3TKA00MWJ**
3"	**P3TFA2E9KAN**	205.0	8.1	832.0	32.8	772.0	30.4	35.5	1.40	42.5	1.67	100.0	3.94	135.0	5.31	12.0	26.4	**P3TKA00CBJ**	**P3TKA00MWJ**

Optional Accessories

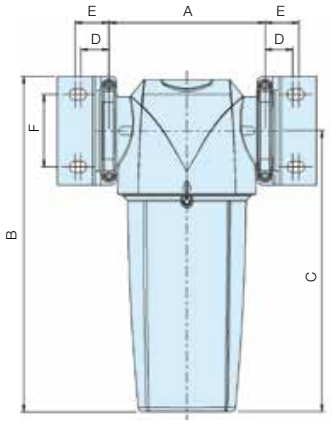

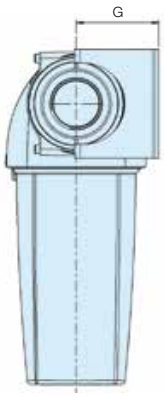



DPI Kit

P3TKA00RQ

Incident Monitor

Used to indicate premature high differential pressure. Indicator can be retrofitted to existing housings without depressurising the system.



Modular Connection Kit

Fixing clamp allows quick and simple connection of multiple filter housings.



Wall Mounting Bracket Kit

Mounting brackets provide additional support to filters installed in flexible piping systems or OEM equipment.

Drain Kits

Auto drain	**P3TKA00DA**
Manual drain	**P3TKA00DM**

Oil Vapour Removal Filter

Fitration Grade

Filtration type	Oil vapour removal
Particle removal (inc water & oil aerosols)	N/A
Max remaining oil content at 21°C	0.003 mg/m³ 0.003 ppm(w)
Filter efficiency	N/A
Test methods used	ISO
8573.5 **ISO 12500-1 Inlet Challenge concentration**	N/A
Initial dry differential pressure	<200 mbar (3psi)
Initial saturated differential pressure	N/A
Change element every	When oil vapour is detected
Precede with filtration grade	0.01 micron Moduflex Coalescer filter



Product selection

Stated flows are for operation at 7 bar (g) with reference to 20°C, 1 bar (a), 0% relative water vapour pressure. For flows at other pressures apply the correction factors shown.

Port Size BSPT	Part Number	dm³/s	m3/hr	cfm	Oil vapour removal Replacement Element Kit
1/4"	**P3TFA22AAMN**	10	36	21	**P3TKA00ESAA**
3/8"	**P3TFA23ABMN**	20	72	42	**P3TKA00ESAB**
1/2"	**P3TFA24ACMN**	30	108	64	**P3TKA00ESAC**
3/4"	**P3TFA26ADMN**	60	216	127	**P3TKA00ESAD**
1 "	**P3TFA28AEMN**	110	396	233	**P3TKA00ESAE**
1.1/4"	**P3TFA2AAEMN**	110	396	233	**P3TKA00ESAE**
1.1/2"	**P3TFA2BAFMN**	160	576	339	**P3TKA00ESAF**
1.1/2"	**P3TFA2BAGMN**	220	792	466	**P3TKA00ESAG**
2"	**P3TFA2CAHMN**	330	1188	699	**P3TKA00ESAH**
2.1/2"	**P3TFA2DAJMN**	430	1548	911	**P3TKA00ESAJ**
3"	**P3TFA2EAJMN**	430	1548	911	**P3TKA00ESAJ**
2.1/2"	**P3TFA2DAKMN**	620	2232	1314	**P3TKA00ESAK**
3"	**P3TFA2EAKMN**	620	2232	1314	**P3TKA00ESAK**

Correction factors

Line pressure bar g	Line pressure psi g	Correction factor
1	15	0.38
2	29	0.53
3	44	0.65
4	58	0.76
5	73	0.85
6	87	0.93
7	100	1.00
8	116	1.07
9	131	1.13
10	145	1.19
11	160	1.25
12	174	1.31
13	189	1.36
14	203	1.41
15	218	1.46
16	232	1.51
17	247	1.56
18	261	1.60
19	275	1.65
20	290	1.70

To find the correction factor for 8.5 bar g (122psi g) =

$$\sqrt{\frac{\text{System Operating Pressure}}{\text{Nominal Pressure}}}$$

$$= \sqrt{\frac{8.5 \text{ bar g}}{7 \text{ bar g}}} = 1.10$$

Filter selection example

Selecting a filter model to match a system flow rate and pressure.
Example: System flow 1050 m³/hr at a pressure of 8.5 bar g

1. Obtain pressure correction factor from table or calculate factor using method shown. Correction factor for 8.5 bar g = 1.10
2. Divide system flow by correction factor to give equivalent flow rate at 7 bar g 1050m³/hr ÷ 1.10 = 955 m³/hr (at 7 bar g)
3. Select a filter model from the above table with a flow rate above or equal to 955 m³/hr. Filter model selected : P3TFA2CAHMN
4. Select pipe connection & Thread type System uses 2" piping and BSP threads: Model P3TFA2CAHMN

Parker Hannifin Corporation
Pneumatic Division - Europe

Tel: +45 63 12 83 00 | Email: ps@hymatik.com | www.hymatik.com | Hvidkaervej 27a, DK-5250 Odense SV, Denmark

Oil Vapour Removal Filter

Technical data

Filter Grade	Drain type	Max operating pressure bar g	Max operating pressure psi g	Max recommended operating temp.		Min recommended operating temp.	
Oil vapour removal	Manual	20	290	100°C	212°F	1.5°C	35°F

Weights and dimensions

Port Size BSPT	Part Number	A mm	A ins	B mm	B ins	C mm	C ins	D mm	D ins	E mm	E ins	F mm	F ins	G mm	G ins	Weight kg	Weight lbs	Modular Connection Kit	Wall Mounting Bracket Kit
1/4"	**P3TFA22AAMN**	76.0	3.0	181.5	7.2	153.0	6.0	18.0	0.71	24.5	0.96	30.0	1.18	52.0	2.05	0.4	0.9	**P3TKA00CBA**	**P3TKA00MWA**
3/8"	**P3TFA23ABMN**	97.5	3.8	235.0	9.3	201.0	7.9	20.5	0.81	25.5	1.00	40.0	1.57	60.0	2.36	1.0	2.2	**P3TKA00CBB**	**P3TKA00MWB**
1/2"	**P3TFA24ACMN**	97.5	3.8	235.0	9.3	201.0	7.9	20.5	0.81	25.5	1.00	40.0	1.57	60.0	2.36	1.0	2.2	**P3TKA00CBB**	**P3TKA00MWB**
3/4"	**P3TFA26ADMN**	129.0	5.1	275.0	10.8	232.5	9.2	23.0	0.91	28.0	1.10	60.0	2.36	68.0	2.68	2.2	4.8	**P3TKA00CBD**	**P3TKA00MWD**
1 "	**P3TFA28AEMN**	129.0	5.1	364.5	14.3	322.0	12.7	23.0	0.91	28.0	1.10	60.0	2.36	68.0	2.68	2.6	5.7	**P3TKA00CBD**	**P3TKA00MWD**
1.1/4"	**P3TFA2AAEMN**	129.0	5.1	364.5	14.3	322.0	12.7	23.0	0.91	28.0	1.10	60.0	2.36	68.0	2.68	2.6	5.7	**P3TKA00CBD**	**P3TKA00MWD**
1.1/2"	**P3TFA2BAFMN**	170.0	6.7	432.5	17.0	382.5	15.1	32.0	1.26	39.0	1.54	84.0	3.31	92.0	3.62	4.5	9.9	**P3TKA00CBF**	**P3TKA00MWF**
1.1/2"	**P3TFA2BAGMN**	170.0	6.7	524.5	20.6	474.5	18.7	32.0	1.26	39.0	1.54	84.0	3.31	92.0	3.62	5.3	11.6	**P3TKA00CBF**	**P3TKA00MWF**
2"	**P3TFA2CAHMN**	170.0	6.7	524.5	20.6	474.5	18.7	32.0	1.26	39.0	1.54	84.0	3.31	92.0	3.62	5.3	11.6	**P3TKA00CBF**	**P3TKA00MWF**
2.1/2"	**P3TFA2DAJMN**	205.0	8.1	641.5	25.3	581.5	22.9	35.5	1.40	42.5	1.67	100.0	3.94	135.0	5.31	10.0	22.0	**P3TKA00CBJ**	**P3TKA00MWJ**
3"	**P3TFA2EAJMN**	205.0	8.1	641.5	25.3	581.5	22.9	35.5	1.40	42.5	1.67	100.0	3.94	135.0	5.31	10.0	22.0	**P3TKA00CBJ**	**P3TKA00MWJ**
2.1/2"	**P3TFA2DAKMN**	205.0	8.1	832.0	32.8	772.0	30.4	35.5	1.40	42.5	1.67	100.0	3.94	135.0	5.31	12.0	26.4	**P3TKA00CBJ**	**P3TKA00MWJ**
3"	**P3TFA2EAKMN**	205.0	8.1	832.0	32.8	772.0	30.4	35.5	1.40	42.5	1.67	100.0	3.94	135.0	5.31	12.0	26.4	**P3TKA00CBJ**	**P3TKA00MWJ**

Optional Accessories

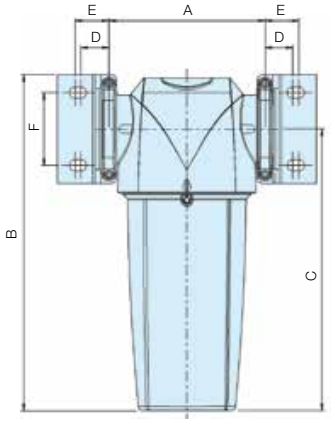



Modular Connection Kit

Fixing clamp allows quick and simple connection of multiple filter housings.



Wall Mounting Bracket Kit

Mounting brackets provide additional support to filters installed in flexible piping systems or OEM equipment.

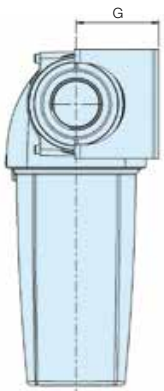

Drain Kits

Auto drain	**P3TKA00DA**
Manual drain	**P3TKA00DM**

Tel: +45 63 12 83 00 | Email: ps@hymatik.com | www.hymatik.com | Hvidkaervej 27a, DK-5250 Odense SV, Denmark

High Efficiency Bulk Liquid Removal

- Tested in accordance with ISO 8573.9
- Performance independently verified by Lloyds Register
- High liquid removal efficiencies at all flow conditions
- Low pressure losses for low operational costs
- Multiple port sizes for a given flow rate provides increased flexibility during installation
- Suitable for variable flow compressors
- Works with all types of compressor and compressor condensate
- Low maintenance
- 10 Year Housing Guarantee



Typical Applications

- Bulk liquid removal at any point in a compressed air system
- Protection of refrigeration and adsorption dryer pre-filtration
- Liquid removal from compressor inter-coolers / after-coolers
- Liquid separation within refrigeration dryers

Product selection

Stated flows are for operation at 7 bar (g) with reference to 20°C, 1 bar (a), 0% relative water vapour pressure.

Port Size	Part Number	dm^3/s	m3/hr	cfm	Max operating pressure		Max Operating temperature		Min Operating temperature	
					bar g	psi g				
1/4”	**P3TFA22WAAN**	10	36	21	16	232	80 C	176 F	1.5 C	35 F
3/8”	**P3TFA23WBAN**	40	144	85	16	232	80 C	176 F	1.5 C	35 F
1/2”	**P3TFA24WCAN**	40	144	85	16	232	80 C	176 F	1.5 C	35 F
3/4”	**P3TFA26WDAN**	110	396	233	16	232	80 C	176 F	1.5 C	35 F
1”	**P3TFA28WEAN**	110	396	233	16	232	80 C	176 F	1.5 C	35 F
1.1/4”	**P3TFA2AWFAN**	350	1260	742	16	232	80 C	176 F	1.5 C	35 F
1.1/2”	**P3TFA2BWGAN**	350	1260	742	16	232	80 C	176 F	1.5 C	35 F
2”	**P3TFA2CWHAN**	350	1260	742	16	232	80 C	176 F	1.5 C	35 F
2.1/2”	**P3TFA2DWKAN**	800	2880	1695	16	232	80 C	176 F	1.5 C	35 F
3”	**P3TFA2EWKAN**	800	2880	1695	16	232	80 C	176 F	1.5 C	35 F

Correction factors

Line pressure bar g	psi g	Correction factor
1	15	0.25
2	29	0.38
3		
4	40.50	
5	58	
6	73	
7	87	
8	100	
9	116	
10	131	
11	145	
12	160	
13	174	
14	189	
15	203	
16	218	
	232	

To find the correction factor for 8 bar g =

$$\sqrt{\frac{\text{System Operating Pressure}}{\text{Nominal Pressure}}}$$

$$= \sqrt{\frac{8 \text{ bar g}}{7 \text{ bar g}}} = 1.06$$

Filter selection example

Selecting a Water Separator model to match a system flow rate and pressure.
Example: System flow 1050 m^3/hr at a pressure of 8 bar g

1. Obtain pressure correction factor from table.
Correction factor for 8 bar g = 1.06
2. Divide system flow by correction factor to give equivalent flow rate at 7 bar g
1050m^3/hr ÷ 1.06 = 984 m^3/hr (at 7 bar g)
3. Select a filter model from the above table with a flow rate above or equal to 984 m^3/hr. Suitable Water Separator models : P3TFA2AWFAN
P3TFA2AWGAN
P3TFA2AWHAN
4. Select pipe connection & Thread type
System uses 1.1/2" piping and BSP threads: Model P3TFA2BWGAN

Parker Hannifin Corporation
Pneumatic Division - Europe

Tel: +45 63 12 83 00 | Email: ps@hymatik.com | www.hymatik.com | Hvidkaervej 27a, DK-5250 Odense SV, Denmark

High Efficiency Bulk Liquid Removal

Separation Efficiency

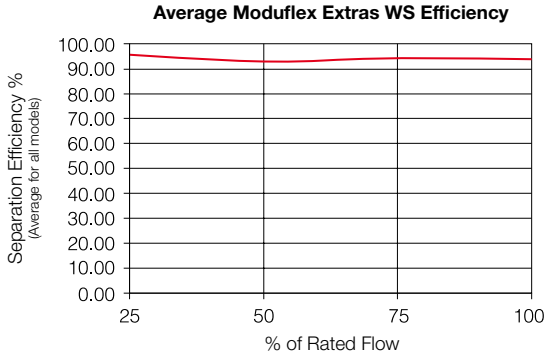

Tested with an inlet challenge concentration of 33ml/m3hr and in accordance with ISO 8573.9.
Performance shown is an average for all models in range. Individual model performance available on request.

Weights and dimensions

Port Size BSPT	Part Number	A		B		C		D		E		F		G		Weight		Modular Connection Kit	Wall Mounting Bracket Kit
		mm	ins	mm	ins	mm	ins	mm	ins	mm	ins	mm	ins	mm	ins	kg	lbs		
1/4”	**P3TFA22WAAN**	76.0	3.0	181.5	7.2	153.0	6.0	18.0	0.71	24.5	0.96	30.0	1.18	52.0	2.05	0.4	0.9	**P3TKA00CBA**	**P3TKA00MWA**
3/8”	**P3TFA23WBAN**	97.5	3.8	235.0	9.3	201.0	7.9	20.5	0.81	25.5	1.00	40.0	1.57	60.0	2.36	1.0	2.2	**P3TKA00CBB**	**P3TKA00MWB**
1/2”	**P3TFA24WCAN**	97.5	3.8	235.0	9.3	201.0	7.9	20.5	0.81	25.5	1.00	40.0	1.57	60.0	2.36	1.0	2.2	**P3TKA00CBB**	**P3TKA00MWB**
3/4”	**P3TFA26WDAN**	129.0	5.1	275.0	10.8	232.5	9.2	23.0	0.91	28.0	1.10	60.0	2.36	68.0	2.68	2.2	4.8	**P3TKA00CBD**	**P3TKA00MWD**
1 “	**P3TFA28WEAN**	129.0	5.1	364.5	14.3	322.0	12.7	23.0	0.91	28.0	1.10	60.0	2.36	68.0	2.68	2.6	5.7	**P3TKA00CBD**	**P3TKA00MWD**
1.1/4”	**P3TFA2BWFAN**	170.0	6.7	432.5	17.0	382.5	15.1	32.0	1.26	39.0	1.54	84.0	3.31	92.0	3.62	4.5	9.9	**P3TKA00CBF**	**P3TKA00MWF**
1.1/2”	**P3TFA2BWGAN**	170.0	6.7	524.5	20.6	474.5	18.7	32.0	1.26	39.0	1.54	84.0	3.31	92.0	3.62	5.3	11.6	**P3TKA00CBF**	**P3TKA00MWF**
2”	**P3TFA2CWHAN**	170.0	6.7	524.5	20.6	474.5	18.7	32.0	1.26	39.0	1.54	84.0	3.31	92.0	3.62	5.3	11.6	**P3TKA00CBF**	**P3TKA00MWF**
2.1/2”	**P3TFA2DWKAN**	205.0	8.1	832.0	32.8	772.0	30.4	35.5	1.40	42.5	1.67	100.0	3.94	135.0	5.31	12.0	26.4	**P3TKA00CBJ**	**P3TKA00MWJ**
3”	**P3TFA2EWKAN**	205.0	8.1	832.0	32.8	772.0	30.4	35.5	1.40	42.5	1.67	100.0	3.94	135.0	5.31	12.0	26.4	**P3TKA00CBJ**	**P3TKA00MWJ**

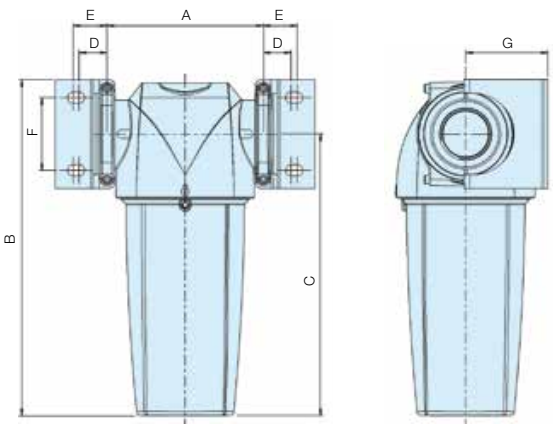

Optional Accessories



Modular Connection Kit
Fixing clamp allows quick and simple connection of multiple filter housings.



Wall Mounting Bracket Kit
Mounting brackets provide additional support to filters installed in flexible piping systems or OEM equipment.

Selection Criteria

To correctly select the dryer best suited for your application, the following details are required to ensure optimum performance and trouble free operation.

- **Maximum Inlet Flow.**
- **Minimum Inlet Pressure.**
- **Maximum Inlet Temperature.**

Once these operating parameters have been established, you can select the most economical Dry Air System for your application.



Technical Specifications

Flow Range:		85 L/min to 567 L/min at 7 bar
Minimum Operating Pressure:		4 bar
Maximum Operating Pressure:		12 bar
Minimum Operating Temperature:		1.5°C
Maximum Inlet Temperature:		50°C
Noise Level (Average):		≤ 70dB(A)
Pressure Dewpoint	**(Standard):**	-40°C pdp
	(Optional):	-70°C pdp
Standard Electrical Supply:		230/1ph/50Hz (Tolerance +/- 10%)
		115/1ph/60Hz (Tolerance +/- 10%)
Controls:		Electronic Control Timer
Inlet Connections:		G3/8
Outlet Connections:		G3/8

Ordering Information

P3	T	J	A		3	A			N

Thread type	
1	BSPP
9	NPT

Size
1
2
3
4
5
6
7

Supply Voltage	
A	(230 V AC)
C	(24 V AC)
J	(110 V AC)

Note: Bold options are standard

Tel: +45 63 12 83 00 | Email: ps@hymatik.com | www.hymatik.com | Hvidkaervej 27a, DK-5250 Odense SV, Denmark

Standard nominal flow rate qnN (NL/min) at pressure dew point -40°C

Model	Port Size	Max inlet temperature	Inlet Pressure (bar)								
			4	5	6	7	8	9	10	11	12
	3/8”	20°C	53	63	75	85	82	92	100	110	118
	3/8”	35°C	33	47	66	85	80	99	118	142	165
P3TJA13A1AN	3/8”	40°C	32	46	64	82	77	97	114	138	160
	3/8”	45°C	29	42	58	75	70	87	104	125	145
	3/8”	50°C	24	35	48	62	58	73	86	103	142
	3/8”	20°C	90	107	125	142	137	153	167	183	198
	3/8”	35°C	57	80	110	142	133	165	197	236	277
P3TJA13A2AN	3/8”	40°C	55	78	106	138	129	161	190	229	269
	3/8”	45°C	50	71	96	125	116	145	174	209	244
	3/8”	50°C	41	59	80	104	97	121	144	172	238
	3/8”	20°C	143	170	200	277	220	245	267	292	317
	3/8”	35°C	90	128	176	227	213	265	315	377	444
P3TJA13A3AN	3/8”	40°C	87	124	170	220	207	257	304	365	431
	3/8”	45°C	79	112	154	200	187	233	278	333	390
	3/8”	50°C	66	94	128	166	156	194	230	274	380
	3/8”	20°C	178	213	250	283	275	307	335	365	397
	3/8”	35°C	112	160	220	283	267	332	395	471	556
P3TJA13A4AN	3/8”	40°C	109	155	213	275	259	322	382	456	540
	3/8”	45°C	98	141	193	249	234	292	348	416	488
	3/8”	50°C	82	117	160	207	195	243	288	343	476
	3/8”	20°C	232	277	323	368	357	398	435	475	515
	3/8”	35°C	146	208	284	368	346	430	513	613	721
P3TJA13A5AN	3/8”	40°C	142	202	275	357	336	418	496	594	700
	3/8”	45°C	128	183	249	324	303	378	452	542	633
	3/8”	50°C	107	152	207	269	253	314	374	447	618
	3/8”	20°C	268	318	373	425	412	458	502	548	595
	3/8”	35°C	169	239	328	425	400	495	592	707	833
P3TJA13A6AN	3/8”	40°C	163	232	317	412	387	481	572	685	809
	3/8”	45°C	147	210	287	374	350	435	522	625	732
	3/8”	50°C	123	175	239	310	293	362	432	515	714
	3/8”	20°C	357	425	498	567	550	612	668	732	793
	3/8”	35°C	225	319	438	567	534	661	788	944	1110
P3TJA13A7AN	3/8”	40°C	218	310	423	550	517	643	762	915	1078
	3/8”	45°C	196	281	383	499	468	581	695	834	975
	3/8”	50°C	164	234	319	414	391	483	574	688	952

Tel: +45 63 12 83 00 | Email: ps@hymatik.com | www.hymatik.com | Hvidkaervej 27a, DK-5250 Odense SV, Denmark

Weights and Dimensions

Model	Dimensions mm (ins) A	Weight kg (lbs)
P3TJA13A1AN	422 (16.6)	11 (24.2)
P3TJA13A2AN	500 (19.7)	13 (28.7)
P3TJA13A3AN	616 (24.2)	16 (35.3)
P3TJA13A4AN	692 (27.2)	18 (39.7)
P3TJA13A5AN	847 (33.3)	20 (44.1)
P3TJA13A6AN	906 (35.7)	23 (50.7)
P3TJA13A7AN	1098 (43.2)	28 (61.7)

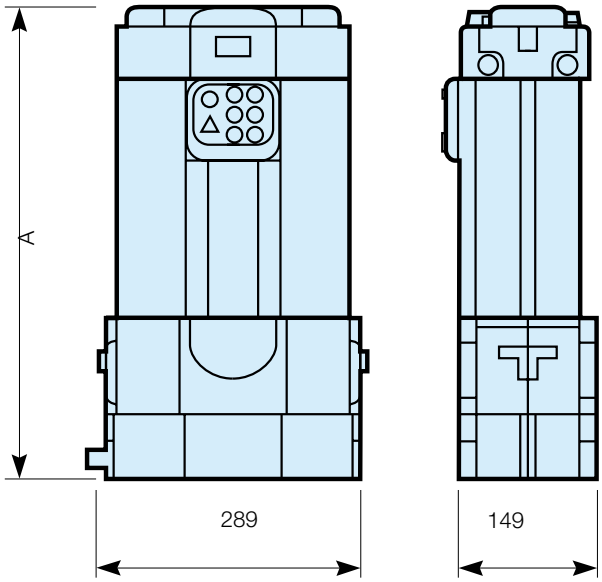

Service Kits

Model	Service Kit
P3TJA13A1AN	**P3TKA00JA1**
P3TJA13A2AN	**P3TKA00JA2**
P3TJA13A3AN	**P3TKA00JA3**
P3TJA13A4AN	**P3TKA00JA4**
P3TJA13A5AN	**P3TKA00JA5**
P3TJA13A6AN	**P3TKA00JA6**
P3TJA13A7AN	**P3TKA00JA7**

Mounting Kits

Description	Kit
Fixed Wall Mounting Bracket	**P3TKA00MJ**
45° Tilt Wall Mounting Bracket	**P3TKA00MK**

Tel: +45 63 12 83 00 | Email: ps@hymatik.com | www.hymatik.com | Hvidkaervej 27a, DK-5250 Odense SV, Denmark

Pressure Switches G1/8", G1/4"



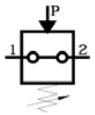

Break contact

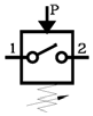

Make contact

Characteristics

Safety pressure relief P_{max}	300 bar
Port size	G1/8, G1/4
Weight (mass)	0.090 kg
Medium and ambient T_{max} temperature range	+100 °C
Switch back difference	Max. 5 - 15%
Voltage	Max. 48 V
Current	0.5 A
Electrical connection	Plug contacts, plug
Degree of protection	IP 65 with plug
Switching frequency	Max. 200 s/min

Material

Housing	Passivated steel
Diaphragm	Buna N

Switching function

Make contact	Closes the circuit when the set pressure is reached
Break contact	Interrupts the circuit when the set pressure is reached

Dimensions and order instructions

Order instructions	Port size (bar)	Function	Setting range	**Order code**	Type	A
PR / 0.1-1 NC ST 1/4 48	G1/4	Break contact	0.1-1	**KL3439**		
PR / 0.1-1 NO ST 1/4 48	G1/4	Make contact	0.1-1	**KL3440**		
PR / 1-10 NC ST 1/8 48	G1/8	Break contact	1-10	**KL3437**		
PR / 1-10 NC ST 1/4 48	G1/4	Break contact	1-10	**KL3436**		
PR / 1-10 NO ST 1/8 48	G1/8	Make contact	1-10	**KL3438**		
PR / 1-10 NO ST 1/4 48	G1/4	Make contact	1-10	**KL3435**		

Plug can be turned 90°

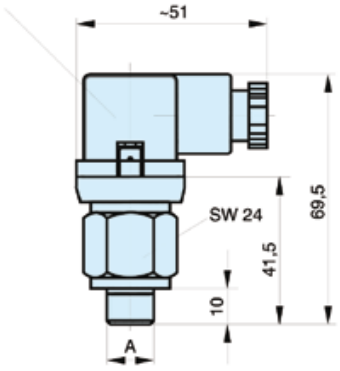

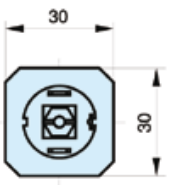

View A
without plug

Dimensions in mm

Pressure Switches G1/8", G1/4"



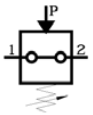

Break contact

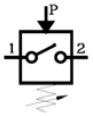

Make contact

Characteristics

Safety pressure relief P_{max}	300 bar
Port size	G1/8, G1/4
Weight (mass)	0.075 kg
Medium and ambient T_{max} temperature range	+100 °C
Switch back difference	Max. 5 - 15%
Voltage	Max. 48 V
Current	0.5 A
Electrical connection	Flat pin plug. protective cap
Degree of protection	IP 65 with protective cap
Switching frequency	200 s/min

Material

Housing	Passivated steel
Diaphragm	Buna N

Switching function

Make contact	Closes the circuit when the set pressure is reached
Break contact	Interrupts the circuit when the set pressure is reached

Dimensions and order instructions

Order instructions	Port size (bar)	Function	Setting range	**Order code**	Type	A
PR / 0.2-1 NO SR 1/4 48	G1/4	Make contact	0.2-1	**KL3445**		
PR / 0.1-1 NC SR 1/4 48	G1/4	Break contact	0.1-1	**KL3454**		
PR / 0.1-1 NO SR 1/4 48	G1/4	Make contact	0.1-1	**KL3455**		
PR / 1-10 NC SR 1/8 48	G1/8	Break contact	1-10	**KL3452**		
PR / 1-10 NC SR 1/4 48	G1/4	Break contact	1-10	**KL3451**		
PR / 1-10 NO SR 1/8 48	G1/8	Make contact	1-10	**KL3453**		
PR / 1-10 NO SR 1/4 48	G1/4	Make contact	1-10	**KL3450**		

Protective cap can be turned 6 x 60°

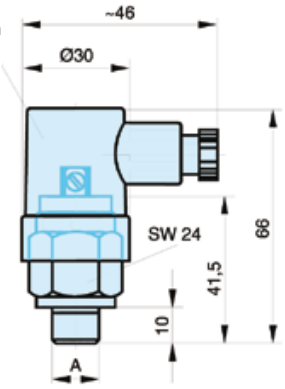



View A
without protective cap

Dimensions in mm

Parker Hannifin Corporation
Pneumatic Division - Europe

Tel: +45 63 12 83 00 | Email: ps@hymatik.com | www.hymatik.com | Hvidkaervej 27a, DK-5250 Odense SV, Denmark

Pressure Switches G1/8", G1/4"
Series G1/4-..I / ..P

- Suited for intrinsically safe operation
- Especially compact design
- High switching frequency
- Attractive design
- Shock proof up to 30 g



Characteristics

Type - thread version	G1/4-0I*	G1/4-2I	G1/4-8I	G1/4-16I
Type - flange version	G1/4-0P*	G1/4-2P	G1/4-8P	G1/4-16P
Setting range $P_{min/max}$ (bar)	-1 to 0	0.2-2	0.5-8	1-16
Safety pressure relief P_{max}	80	80	80	80
Port size	Type I: G1/4 internal thread, Type P: flange			
Mounting	2 through holes Ø 5.2			
Installation	In any position			
Weight (mass)	0.275 kg			
Medium	Filtered compressed air (10µm), lubricated or unlubricated			
Medium and ambient T_{min}	-10 °C			
temperature range T_{max}	+80 °C			
Consistency	±2 in relation to end-of-range value			
Hysteresis, vaccum version	<15%			
Vibration resistance	10 g (10 ... 2000 Hz)			
Shock resistance	30 g			
Voltage	Max. 250 V			

Voltage type	AC and DC
Operating current and	AC12 to VDE0660 4A at 250 VAC AC14 to VDE0660 1A at 250 VAC DC12 to VDE0660 3A at 28 VDC DC13 to VDE0660 1A at 28 VDC
CE marking	To EC Directive 73/23/EWG
Electrical connection	Plug to DIN EN 175301-803, Form A, ISO4400 or M12x1 - 4-pin
Degree of protection	IP65
Switching element	Pole changing switch with catch spring as switching element, with self-cleaning contacts
Switching frequency	Max. 200 s/min

* for vacuum operation

Material

Housing powder coated	Special aluminium die casting,
Diaphragm, seals	Buna N

Selection and Mounting:

Range selection:
Selection is optimal when the switching points are in the middle of the switching range.

Electrical connection:
Wiring according to VDE regulations.
Tightening torque for plug: 0.7 ± 0.1 Nm
Outdoor use only with sufficient pretection against critical environmental conditions (e.g. aggressive atmosphere, salty environments, high temperature changes).

Switch back difference

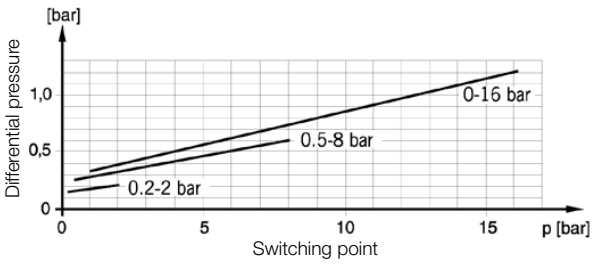

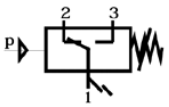

Pin 1 - 3:
Rising pressure makes contact.

Pin 1 - 2:
Rising pressure breaks contact.

Delivery includes:
The flange version (surface roughness of flange surface 12µm) is supplied with an O-ring 5 x 1.5mm and 2 screws 5 x 35 DIN 912. Minimum thread length to be used: 4mm.

Max. diameter of the pressure opening 3mm.

Tel: +45 63 12 83 00 | Email: ps@hymatik.com | www.hymatik.com | Hvidkaervej 27a, DK-5250 Odense SV, Denmark

Dimensions (mm)

Version with internal thread and plug

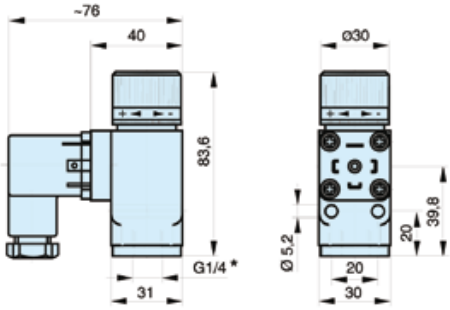

Flange version and plug

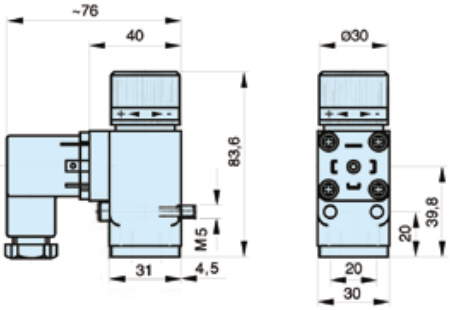

with M12 connector

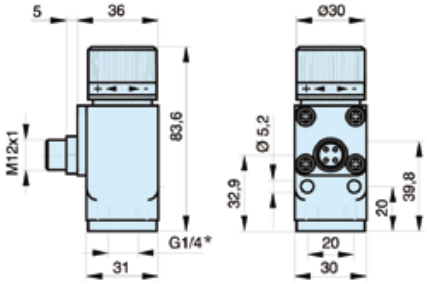

with M12 connector

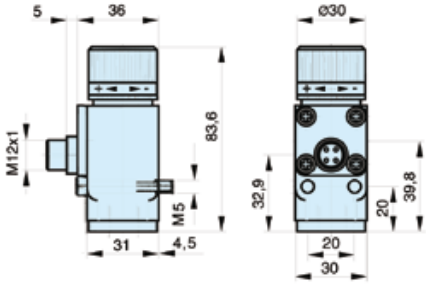

* Thread 11mm deep

Setting range (bar)	Type	**Order code**
-1 to 0	G1/4-0I-DIN	**KL3200**
-1 to 0	G1/4-0I-M12	**KL3208**
0.2 to 2	G1/4-2I-DIN	**KL3201**
0.2 to 2	G1/4-2I-M12	**KL3209**
0.5 to 8	G1/4-8I-DIN	**KL3202**
0.5 to 8	G1/4-8I-M12	**KL3210**
1.0 to 16	G1/4-16I-DIN	**KL3203**
1.0 to 16	G1/4-16I-M12	**KL3211**

Setting range (bar)	Type	**Order code**
-1 to 0	G1/4-0P-DIN	**KL3204**
-1 to 0	G1/4-0P-M12	**KL3212**
0.2 to 2	G1/4-2P-DIN	**KL3205**
0.2 to 2	G1/4-2P-M12	**KL3213**
0.5 to 8	G1/4-8P-DIN	**KL3206**
0.5 to 8	G1/4-8P-M12	**KL3214**
1.0 to 16	G1/4-16P-DIN	**KL3207**
1.0 to 16	G1/4-16P-M12	**KL3215**

Plugs to DIN EN 175301-803, Form A, ISO 4400

Standard version



Version with LEDs



Plugs to DIN EN 175301-803, Form A, ISO 4400

Description	Type	**Order code**
Standard version	GSD-30DS	**KL3349**
Version with LEDs 24 V	GSD-30DSL24V	**KL3350**
Version with LEDs 230 V	GSD-30DSL230V	**KL3351**

Tel: +45 63 12 83 00 | Email: ps@hymatik.com | www.hymatik.com | Hvidkaervej 27a, DK-5250 Odense SV, Denmark

Pressure Switches Electronic Series EDP

The EDP electronically actuated pressure switches are used to convert pneumatic signals into electrical signals. The pressure range 0-16 bar can be adjusted individually, in either bar or psi.
The pressure switches can be used as threshold value comparators with one hysteresis or as window comparators with two hystereses.
A robust ceramic measuring cell acts as a measured value transducer.

- Simple, menu-driven programming via 3 membrane keys
- 3-digit red LED display (pressure gauge function)
- Electronic locking
- Versions for specific applications on request

Symbol

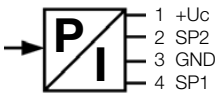



Characteristics

Type - flange version	EDP-V	EDP
Setting range $P_{min/max}$ (bar)	-1 to 0	0-16
Safety pressure relief P_{max}	100 bar	100 bar
Port size	Flange connection	
Display	3 digit, red 7-Segment LED-Display, programmable 0°/180°	
Display for operating status	LED red/green	
Linearity %	<± 0.2 to 1.5 p_N	
TK zero point %	<± 0.2 p_N	
Installation	In any position	
Weight (mass)	0.100 kg	
Medium	Filtered compressed air, lubricated or unlubricated, weakly acidic or weakly alkaline fluids	
Ambient T_{min}	-20 °C	
temperature range T_{max}	+70 °C	
Medium T_{min}	-20 °C	
temperature range T_{max}	+70 °C	

Voltage	18 - 32 V
Voltage type	Direct current
Power consumption	< 80 mA without switching outlet
Switching current	SP1 max. 1.3 A (PIN4) SP2 / ERROR max. 0.3A (PIN2)
Switching logic	NO / NC programmable
Switching outlet	Short circuit proof
Electrical connection	Plug M12x1
Degree of protection	IP67 to EN 60529

Material

Housing	PA, part in contact with medium: Al
Measuring cell	Ceramic
Seals	Buna N, part in contact with medium: FKM

Applications

- Pneumatic control systems
- Pressing technology
- Welding technology
- Packing machines and filling systems
- Test systems
- Clamping systems
- Plastic blow-moulding machinery
- Robotics and handling industry

Connection diagram

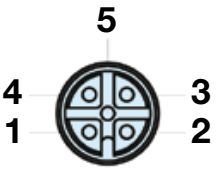

Electrical connection

1 = bn (brown)	**+Uc**
2 = ws (white)	**SP2**
3 = bl (blue)	**GND**
4 = sw (black)	**SP1**

Parker Hannifin Corporation
Pneumatic Division - Europe

Tel: +45 63 12 83 00 | Email: ps@hymatik.com | www.hymatik.com | Hvidkaervej 27a, DK-5250 Odense SV, Denmark

Threshold value comparator / window value comparator functions

Threshold value comparator with hysteresis

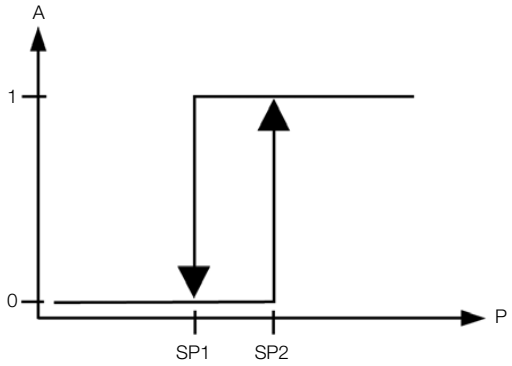

Window comparator with 2 hystereses

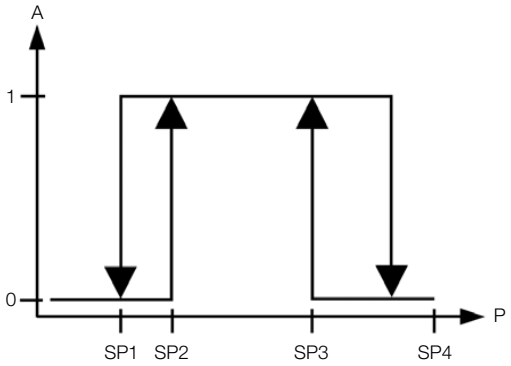

The illustrations show the NO (normally open) presetting.
For the NC (normally closed) presetting, the diagrams are horizontally mirror-imaged, so that the start value is at 1.

Dimensions - Flange version with M12x1 connector

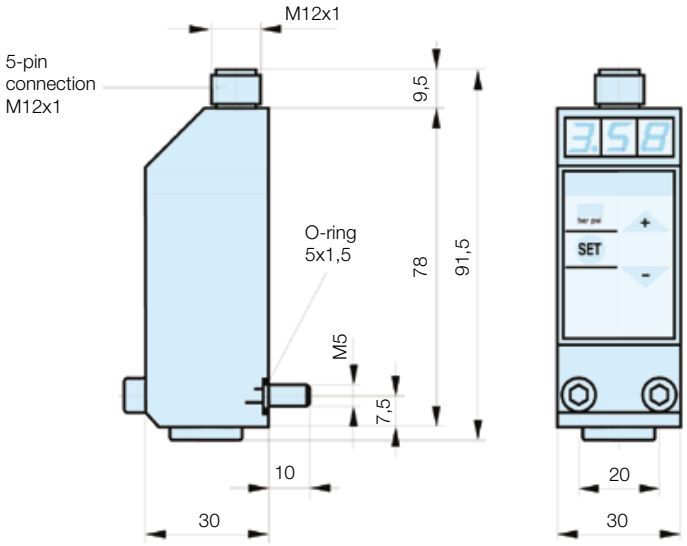

Setting range (bar)	Type	**Order code**
-1 to 1	EDP-V	**KL3385**
0 to 16	EDP	**KL3384**

Dimensions in mm.

Tel: +45 63 12 83 00 | Email: ps@hymatik.com | www.hymatik.com | Hvidkaervej 27a, DK-5250 Odense SV, Denmark

Protect your most important assets: your employees and their equipment!

The AirGuard offers simple but efficient protection to pneumatic systems in the event of a broken compressed-air hose or pipe. The air supply is immediately shut off by the AirGuard, should the volume of air exceed a set value. This “value” is factory preset and is set to allow normal air consumption when using air tools.

Should the air consumption exceeds the set value, e.g. the air line is severed, then the internal piston instantly shuts off the main flow. An integral bleed hole allows some air to flow though. This enables the line pressure to automatically reset the AirGuard once the main line break is repaired.

Management Responsibility:
It is the duty of management to ensure a safe working environment for their employees and that the equipment complies with **ISO 4414** or **“PUWER”** (the Provision and Use of Work Equipment Regulations)

Complies with the 2010 ISO4414 (5.4.5.11.1)
“When failure of a hose assembly or plastic piping constitutes a whiplash hazard, it shall be restrained or shielded by suitable means. In addition, an air fuse for compressed air should be mounted.”

Function:

(P) is the inlet. The air flows over piston (1) and continues through seat (3). The flow of air over the piston is slowed down by several longitudinal grooves on the exterior of the piston. If the flow becomes excessive, the current of air cannot flow over the piston quickly enough.
The piston is then pressed against spring (2) beneath it, and towards the seat. If the flow is exceeded, for example, if the hose suddenly breaks, the air supply is automatically shut off.

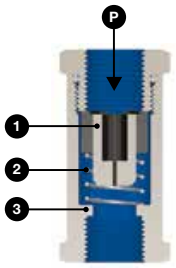

Special Applications

Stainless Steel AirGuard available in 1/2” size

Some branches of industry with a high hazard potential, such as chemical and pharmaceutical as well as clean room and offshore technologies place extremely high demands on both the safety of their employees and the protection of their facilities. Compressed air is typically used as an energy transfer medium in these industries and is no means without its dangers: compressed air hoses can rupture or burst, as can fixed pipes. This may expose personnel working in such areas to extreme hazards as well as potential damage to expensive facilities and costly production downtime.

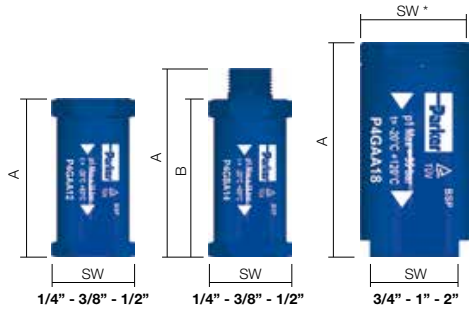



Technical Data and Ordering Information

Thread connection BSP	dimensions (mm)			Weight (g)	Maximum inlet pressure	Temperature range	Material	P1 inlet thread	P2 outlet thread	Order Code
	A	B	SW							
1/4”	48	-	22	30	18 bar (255 PSIG)	-20°C to 80°C (-4°F to 176°F)	Housing: aluminium Piston: polyoxy-methylene	female	female	**P4GAA12**
1/4”	58	49	22	36				male	female	**P4GBA12**
3/8”	59	-	27	58				female	female	**P4GAA13**
3/8”	71	59	27	62				male	female	**P4GBA13**
1/2”	65	-	30	78				female	female	**P4GAA14**
1/2”	80	65	30	85				male	female	**P4GBA14**
1/2”	62	-	28	132			Housing: stainless steel Piston: polyoxy methylene	female	female	**P4GCA14**
3/4”	76	-	30 / 36*	107	35 bar (500 PSIG)	-20°C to 120°C (-4°F to 248°F)	Housing: aluminium Piston: aluminium	female	female	**P4GAA16**
1”	100	-	41 / 50*	300				female	female	**P4GAA18**
2”	130	-	70 / 80*	775				female	female	**P4GAA1C**

Note: NPT version available on request - 1/4” high flow version available on request.

Tel: +45 63 12 83 00 | Email: ps@hymatik.com | www.hymatik.com | Hvidkaervej 27a, DK-5250 Odense SV, Denmark

Closing Flow Graphs

1/4", 3/8" and 1/2" flow rates

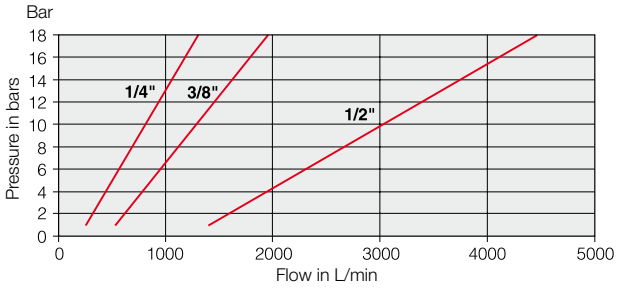

3/4", 1" and 2" flow rates

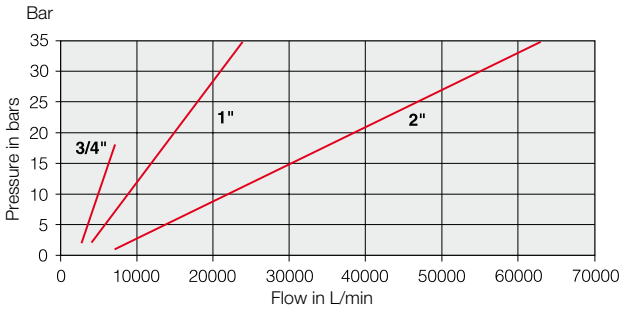

Dimensioning of compressed air hoses and equipment

Connection Size	Hose length 0 to 10 meters			Hose length 10 to 20 meters		
	Inner diameter Minimum mm	Minimum pressure bar	Flow at 6 bar l/min	Inner diameter minimum	Minimum pressure bar	Flow at 6 bar l/min
1/4"	7	4	480	8	4	480
3/8"	10	4	1100	12	4	1100
1/2"	12	4	2000	14	4	2000
3/4"	18	4	3800	20	4	3800
1"	24	4	6500	26	4	6500
2"	45	4	16000	50	4	16000

If the pressure is lower than stated in the table, a hose with a larger internal diameter must be used.

To select the correct size AirGuard, the pneumatic tool or equipment must have a maximum flow requirement to the left of the red line.

e.g.: 15 bar @20000 L/m = 2" size AirGuard
8 bar @1000 L/m = 3/8" size AirGuard

TÜV Approval: 01-02-0145

ATEX

These products are out of scope of the ATEX Directive 94/9/EC; however they can be used in a Group II Category 2 environment assuming that the ATEX Directive and the following conditions are complied with:

- Maximum working temperature to be as stated on product label.
- Product cleaning must be undertaken using a method complying with the specification of the ATEX Zone, preferably by aspiration and/or utilization of Antistatic Products.
- Deposits of dust on the product must not exceed 5mm thickness.
- Installation and Maintenance of the product must be done by a qualified personnel.
- Do not mount products in an area where Impact may occur.

AirGuard - P4G for zone 1, 21

Complies with: ISO 4414 5.4.5.11

Failure of hose assemblies and plastic piping 5.4.5.11.1

"When failure of a hose assembly of plastic piping constitutes a whiplash hazard, it shall be restrained or shielded by suitable means. In addition, **an air fuse for compressed air should be mounted"**

Table 1: Dimensioning of compressed air hoses and equipment

Thread	Hose length 0 to 10 meters			Hose length 10 to 20 meters		
	Inner diameter Minimum mm	Minimum pressure bar	Flow at 6 bar l/min	Inner diameter minimum	Minimum pressure bar	Flow at 6 bar l/min
1/4"	7	4	480	8	4	480
3/8"	10	4	1100	12	4	1100
1/2"	12	4	2000	14	4	2000
3/4"	18	4	3800	20	4	3800
1"	24	4	6500	26	4	6500
2"	45	4	16000	50	4	16000

If the pressure is lower than stated in the table, a hose with a larger internal diameter must be used.

Tel: +45 63 12 83 00 | Email: ps@hymatik.com | www.hymatik.com | Hvidkaervej 27a, DK-5250 Odense SV, Denmark

A range of speed controls, flow controls and back pressure sensors designed to be mounted directly onto the cylinder in the optimum position for maximum performance.



- "Push-in" or threaded connection
- Multifunction options
- Fit directly to cylinder ports
- Swivelling pilot banjo
- Pneumatic, Electric or Electronic back pressure sensor

For ATEX specific products contact Sales Office

Operating information

Working pressure;

PWR-L, PWR-H, PWR-A, PWR-B	1-10 bar
PWB-A, PWS-M, PWS-E, PWS-P	0-10 bar
PWA-L	0,2-10 bar
Working temperature	: -15°C to +60°C
PWR-L	-15°C to +70°C

Pilot pressure at 6 bar supply;

PWB-A and PWR-HB	(1/8", 1/4" versions)	: 4 bar
	(1/2" and 3/8" versions)	: 2,9 bar
PWS-P111		: 4,4 bar
PWS-M1012		: 1,5 bar
PWS-E101 and E111		: 0,7 bar

For more information see www.parker.com/euro_pneumatic

2/2 Blockers

Symbol	Connection for pilot port	Thread for cylinder connection	Connection for tube Ø, mm	Tightening torque Nm	Qmax input at 6 bar, l/min*	Order code
With threaded connection						
	**Push-in *, Ø4 mm**	**G1/8**	G1/4	8	500	**PWB-A1898**
		G1/4	G1/4	12	650	**PWB-A1899**
		G3/8	G3/8	30	1750	**PWB-A1833**
		G1/2	G1/2	35	2050	**PWB-A1822**

* M5 without banjo

Flow control valves with by-pass

Symbol	Thread	Number of turns	Qmax input at 6 bar, l/min	Order code
 	**G1/8**	13	240	**VQB12-Q-O-5**
	G1/4	13	1320	**VQB22-Q-O-5**
	G1/2	13	3600	**VQB42-Q-O-5**

Tel: +45 63 12 83 00 | Email: ps@hymatik.com | www.hymatik.com | Hvidkaervej 27a, DK-5250 Odense SV, Denmark

Flow control valves with by-directional control

	Symbol	Thread	Number of turns	Qmax input at 6 bar, l/min	Order code
		**G1/8**	13	72	**VQB12-OX-5 ***
		G1/8	13	240	**VQB12-O-5**
		G1/4	13	1320	**VQB22-O-5**
		G1/2	13	3600	**VQB42-O-5 ****

* Extra fine adjustment
** Low operating temp -40°C

Knob and nut for panel mounting

	To suit	Order code
	**VQB12**	**9128177212**
	VQB22	**9128177222**
	VQB42	**9128177242**

Dimensions (mm)

Flow Control Valves

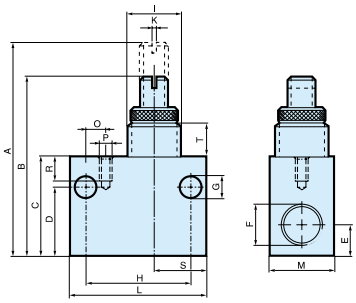

Order code	A	B	C	D	E	F	G	H	I
VQB12-(Q)-OX-5	49	42	22	15	6,5	G1/8	5,8	24	M12x1
VQB12-(Q)-O-5	49	42	22	15	6,5	G1/8	5,8	24	M12x1
VQB22-(Q)-O-5	64	53	30	21	8,5	G1/4	7,0	32	M16x1
VQB42-(Q)-O-5	99	85	50	36	16,5	G1/2	7,0	50	M24x1,5

Order code	K	L	M	O	P	R	S	T
VQB12-(Q)-OX-5	1,2	32	15	-	-	-	13,5	8,8
VQB12-(Q)-O-5	1,2	32	15	-	-	-	13,5	8,8
VQB22-(Q)-O-5	1,2	42	20	6,0	M4	7	16,0	10,0
VQB42-(Q)-O-5	1,8	62	30	19,5	M4	7	20,5	15,2

Parker Hannifin Corporation
Pneumatic Division - Europe

Tel: +45 63 12 83 00 | Email: ps@hymatik.com | www.hymatik.com | Hvidkaervej 27a, DK-5250 Odense SV, Denmark

- Micrometer type adjustment
- Fine control
- Non-return and needle valves



- Screw driver adjustment
- Rugged bodies
- High flow rate
- High flow by-pass
- Wide range of sizes



Operating and additional information

Micrometer flow control valves

Operating pressure:	0 to 17 bar
Operating temperature:	-40°C to +80°C
Body material:	Brass
Control knob:	Aluminium
Adjustment mode:	Knurled knob

Heavy duty Inline flow control valves

Operating pressure:	0 to 17 bar for air or oil
Operating temperature:	-18°C to +82°C
Body material:	Brass
Control knob:	Brass
Adjustment mode:	Screw driver adjustment

Flow Control with By-pass



Symbol



Thread	Number of turns	Qmax input at 6 bar, l/min	Weight g	Order code
G1/8	5	300	76	**337A**
G1/4	6	780	134	**337B**

Flow Control with By-directional Control



Symbol



Thread	Number of turns	Qmax input at 6 bar, l/min	Weight g	Order code
G1/8	5	300	78	**338A**
G1/4	6	780	132	**338B**

Micrometer Flow Control Valves - Dimensions

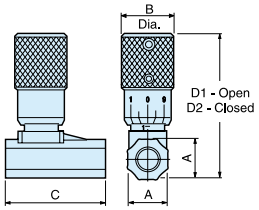

Order code	Port size	Dimensions (mm) A	B	C	D1 open	D2 closed
337A	G1/8	14,5	19	37.5	51.5	46
337B	G1/4	17,5	19	37.5	58	51
338A	G1/8	14,5	19	37.5	51.5	46
338B	G1/4	17,5	19	37.5	58	51

Standard type



Symbol



Thread	Number of turns	Qmax input at 6 bar, l/min	Weight g	Order code
G1/8	6	1320	114	**B3250X**
G1/4	5	2880	224	**B3250AB**
G3/8	5	6300	378	**B3250BB**
G1/2	5	7680	792	**B3250CB**
G3/4	4,5	10680	1300	**B3250DB**

Flow Control Valves, Standard Type

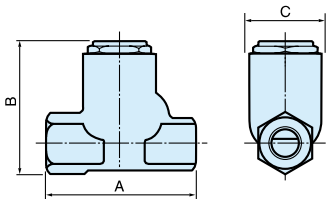

Order code	Port size	Dimensions (mm) A	B	C
B3250X	G1/8	44	40	21
B3250AB	G1/4	57	51	28
B3250BB	G3/8	68	64	35
* **B3250CB**	G1/2	79	78	41
B3250DB	G3/4	90	92	51

* Low operating temperature -40°C @ 10 bar

Parker Hannifin Corporation
Pneumatic Division - Europe

Tel: +45 63 12 83 00 | Email: ps@hymatik.com | www.hymatik.com | Hvidkaervej 27a, DK-5250 Odense SV, Denmark

Quick Exhaust Valves

- Increases piston speeds, super sensitive diaphragm.
- May be used as differential shuttle valve.

Shuttle Valves

- Allows two separate signals to be applied to the air pilot.
- 0,6 bar differential, Viton seals as standard.

Non Return Valves

- Aluminium or polymer bodies
- Compact



Operating information

Shuttle valve •••005

Working pressure	1,3 - 17 bar
Working temperature; Standard	-10 °C to +180 °C

Quick exhaust valve P4Q

Working pressure:	0,2 - 10 bar
Working temperature; Standard:	-10 °C to +80 °C

VB

Working pressure	Max 10 bar
Working temperature	-20 °C to +70 °C

PWA-L

Working pressure	0,2 - 10 bar
Working temperature;	-15 °C to +60 °C

For more information see www.parker.com/euro_pneumatic

Shuttle Valves



Symbol	Port size	Order code
	M5	**M33005**
	G1/8	**B43005B**
	G1/4	**B53005A**
	G1/4	**B53005BS5** (-40°C to +80°C)

Quick Exhaust Valves P4Q Series



Symbol	Port size	Order code
	Standard Version	
	G1/4	**P4Q-BA12**
	G3/8	**P4Q-BA13**
	G1/2	**P4Q-CA14**
	G3/4	**P4Q-CA16**
	High Temperature Version (Flurocarbon diaphragm)	
	G3/8	**P4Q-BV13**
	G1/2	**P4Q-CV14**
	G3/4	**P4Q-CV16**

Non Return Valves

Aluminium VB Series



Symbol	Port size	Order code
	G1/8	**VB12-Q-NQ-5**
	G1/4	**VB22-Q-NQ-5**
	G1/2	**VB42-Q-NQ-5**
	G1/2	**VB42-S50897** (Viton - dry assembly)

In-Line Equal Non-Return Valve



Symbol	Push-in connection Ø, mm	Flow rate 6 bar, Nl/min	Order code
	4	350	**7996 04 00**
	6	670	**7996 06 00**
	8	1080	**7996 08 00**

Tel: +45 63 12 83 00 | Email: ps@hymatik.com | www.hymatik.com | Hvidkaervej 27a, DK-5250 Odense SV, Denmark

Dimensions (mm)

Quick Exhaust Valves

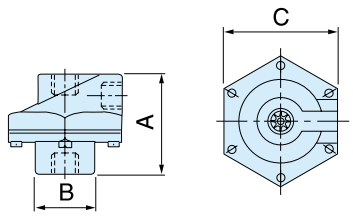

Order code	Port Size	A	B	C
P4Q-B*12	G1/4	52	25	62
P4Q-B*13	G3/8	52	25	62
P4Q-B*14	G1/2	73	38	86
P4Q-B*16	G3/4	73	38	86

Shuttle Valves

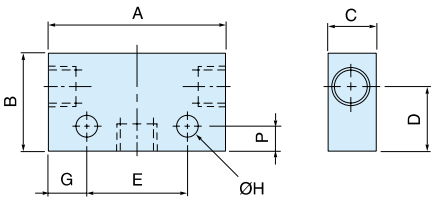

Order code	Port Size	A	B	C	D	E	F	G	H
M33005	M5	27,5	24	15	16,0	15	6	6,3	3,2
B43005B	G1/8	44,0	24	15	16,0	25	6	9,5	4,5
* **B53005A**	G1/4	52,0	30	22	20,5	35	10	8,5	5,5

* Dimensions as **B53005BS5**

Non Return Valves - VB - Female

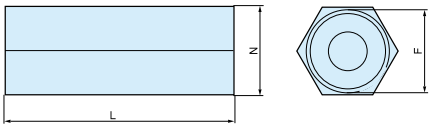

Order code	F	L	N
VB12-Q-NQ-5	G1/8	31	14
VB22-Q-NQ-5	G1/4	40	17
* **VB42-Q-NQ-5**	G1/2	59	27

* Dimensions as **VB42 / S50897**

Tel: +45 63 12 83 00 | Email: ps@hymatik.com | www.hymatik.com | Hvidkaervej 27a, DK-5250 Odense SV, Denmark

- All plastic ultra light weight versions
- Sintered metal
- All metal versions for heavy duty applications
- Versions with push-in connections
- High noise level reduction
- Low back pressure generation



Operating and additional information

Plastic	Working temperature: Efficiency	-10°C to +80°C 92%		
Metal	Working temperature:	-10°C to +74°C	Working pressure	up to 17 bar

Sintered Bronze Series (female)



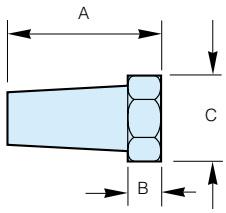

Symbol



Port mm	A	Ø B	A/F C	Weight g	Order code
G1/8	15	8	13	0,060	**9721900404**

Heavy Duty Series



Symbol

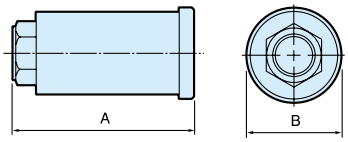

Port Female	A	Ø B	Weight g	Order code
G3/8	83	37	0,124	**P6M-MA13**
G1/2	105	51	0,362	**P6M-MA14**
G3/4	143	73	0,670	**P6M-MA16**
G1	143	73	0.666	**P6M-MA18**

Self Cleaning, 48 Series



Symbol



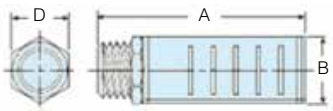

Port thread	A	Ø B	A/F E	Order code
R1/8	47	21	16 (5/8")	**ESB12MC**
R1/4	47	21	16 (5/8")	**ESB25MC**
R3/8	84	32	25.4 (1")	**ESB37MC**
R1/2	84	32	25.4 (1")	**ESB50MC**
R3/4	116	52	41.2 (1-5/8")	**ESB75MC**
R1	116	52	41.2 (1-5/8")	**ESB100MC**
R1-1/4	145	73.5	-	**ESB125MC**
R1-1/2	145	73.5	-	**ESB150MC**

Tel: +45 63 12 83 00 | Email: ps@hymatik.com | www.hymatik.com | Hvidkaervej 27a, DK-5250 Odense SV, Denmark

Restrictors - Silencers



- Stainless steel or plastic versions
- Screwdriver adjustment
- Simple control of cylinder speeds
- High noise level reduction

Sintered Stainless Steel Series



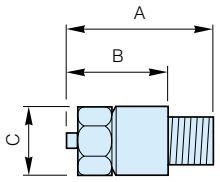

Symbol



Port thread	Overall length	Ø	A/F	Order code
G1/8	33	16	13,0	**9126900195**
G1/4	36	20	17,0	**9126900196**

Tel: +45 63 12 83 00 | Email: ps@hymatik.com | www.hymatik.com | Hvidkaervej 27a, DK-5250 Odense SV, Denmark

Reclassifier - Silencers Metal Series, Repairable and Disposable versions



- Removes oil mist from exhaust airs
- Efficiently silences exhaust air
- Improves working conditions

Operating and additional information

Metal repairable version		Disposable version	
Working temperature	0 °C to 66 °C max.	Working temperature	0° C to 52 °C max.
Working pressure	Max 7 bar	Working pressure	Max 7 bar
Efficiency	Better than 99%	Efficiency	Better than 99%
Maximum flow rate	G1/2, G3/4 small unit 27,8 dm^3/s G3/4, G1 large unit 50 dm^3/s	Maximum flow rate	See graph

Disposable version
Flow vs. Noise level

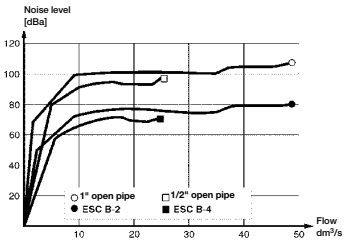

Flow vs. Back pressure

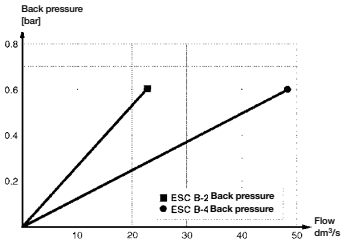

Metal Repairable Series



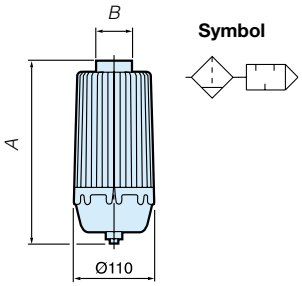

Symbol

Port thread	Type	A	Ø	A/F B	Weight kg	Order code
G1/2	Small	182	110	50	0,572	**3514S**
G3/4	Small	182	110	50	0,592	**3516S**
G3/4	Large	297	110	55	1,100	**3516**
G1	Large	297	110	55	1,100	**3518**

Replacement Element	Weight kg	Order code
Small	0,200	**3514S-2**
Large	0,200	**3516-2**

Manifold for Metal Repairable version



Number of ports	Weight kg	Order code
5	0,270	**M3516-5**
7	0,432	**M3516-7**
9	0,574	**M3516-9**
13	0,870	**M3516-13**

The manifold is available for G3/4 sizes only.

Parker Hannifin Corporation
Pneumatic Division - Europe

Tel: +45 63 12 83 00 | Email: ps@hymatik.com | www.hymatik.com | Hvidkaervej 27a, DK-5250 Odense SV, Denmark

Tel: +45 63 12 83 00 | Email: ps@hymatik.com | www.hymatik.com | Hvidkaervej 27a, DK-5250 Odense SV, Denmark











Fittings, tubing and couplers

LF 3000: Polymer Push-In Fittings - Threaded

-20°C to +80°C
20 bar max. (vacuum 755 mmHg)

3101 Male Stud Fitting BSPP & M5



ØD	C	Order code
4	M5 x 0.8	**3101 04 19**
4	G1/8	**3101 04 10**
4	G1/4	**3101 04 13**
6	M5 x 0.8	**3101 06 19**
6	G1/8	**3101 06 10**
6	G1/4	**3101 06 13**
6	G3/8	**3101 06 17**
8	G1/8	**3101 08 10**
8	G1/4	**3101 08 13**
8	G3/8	**3101 08 17**
10	G1/4	**3101 10 13**
10	G3/8	**3101 10 17**
10	G1/2	**3101 10 21**
12	G3/8	**3101 12 17**
12	G1/2	**3101 12 21**
14	G3/8	**3101 14 17**
14	G1/2	**3101 14 21**
16	G3/8	**3101 16 17**
16	G1/2	**3101 16 21**

3175 Male Stud Fitting BSPT



ØD	C	Order code
4	R1/8	**3175 04 10**
4	R1/4	**3175 04 13**
6	R1/8	**3175 06 10**
6	R1/4	**3175 06 13**
6	R3/8	**3175 06 17**
6	R1/2	**3175 06 21**
8	R1/8	**3175 08 10**
8	R1/4	**3175 08 13**
8	R3/8	**3175 08 17**
10	R1/4	**3175 10 13**
10	R3/8	**3175 10 17**
10	R1/2	**3175 10 21**
12	R3/8	**3175 12 17**
12	R1/2	**3175 12 21**
14	R3/8	**3175 14 17**
14	R1/2	**3175 14 21**
16	R3/8	**3175 16 17**
16	R1/2	**3175 16 21**

3114 Female Stud Fitting BSPP & M5



ØD	C	Order code
4	M5 x 0.8	**3114 04 19**
4	G1/8	**3114 04 10**
4	G1/4	**3114 04 13**
6	G1/8	**3114 06 10**
6	G1/4	**3114 06 13**
8	G1/8	**3114 08 10**
8	G1/4	**3114 08 13**
10	G1/4	**3114 10 13**
10	G3/8	**3114 10 17**
10	G1/2	**3114 10 21**
12	G3/8	**3114 12 17**
12	G1/2	**3114 12 21**
14	G3/8	**3114 14 17**
16	G1/2	**3114 16 21**

3199 Male Stud Elbow, BSPP & M5



ØD	C	Order code
4	M5 x 0.8	**3199 04 19**
4	G1/8	**3199 04 10**
4	G1/4	**3199 04 13**
6	M5 x 0.8	**3199 06 19**
6	G1/8	**3199 06 10**
6	G1/4	**3199 06 13**
6	G3/8	**3199 06 17**
8	G1/8	**3199 08 10**
8	G1/4	**3199 08 13**
8	G3/8	**3199 08 17**
8	G1/2	**3199 08 21**
10	G1/4	**3199 10 13**
10	G3/8	**3199 10 17**
10	G1/2	**3199 10 21**
12	G1/4	**3199 12 13**
12	G3/8	**3199 12 17**
12	G1/2	**3199 12 21**
14	G3/8	**3199 14 17**
14	G1/2	**3199 14 21**
16	G3/8	**3199 16 17**
16	G1/2	**3199 16 21**

3169 Extended Male Stud Elbow, BSPP & M5



ØD	C	Order code
4	M5 x 0.8	**3169 04 19**
4	G1/8	**3169 04 10**
4	G1/4	**3169 04 13**
6	M5 x 0.8	**3169 06 19**
6	G1/8	**3169 06 10**
6	G1/4	**3169 06 13**
8	G1/8	**3169 08 10**
8	G1/4	**3169 08 13**
8	G3/8	**3169 08 17**
10	G1/4	**3169 10 13**
10	G3/8	**3169 10 17**
10	G1/2	**3169 10 21**
12	G1/4	**3169 12 13**
12	G3/8	**3169 12 17**
12	G1/2	**3169 12 21**
14	G3/8	**3169 14 17**
14	G1/2	**3169 14 21**
16	G3/8	**3169 16 17**
16	G1/2	**3169 16 21**

LF 3000: Polymer Push-In Fittings - Threaded

-20°C to +80°C
20 bar max. (vacuum 755 mmHg)

3129 Extended Male Stud Elbow, BSPT



ØD	C	Order code
4	R1/8	**3129 04 10**
4	R1/4	**3129 04 13**
6	R1/8	**3129 06 10**
6	R1/4	**3129 06 13**
8	R1/8	**3129 08 10**
8	R1/4	**3129 08 13**
8	R3/8	**3129 08 17**
10	R1/4	**3129 10 13**
10	R3/8	**3129 10 17**
10	R1/2	**3129 10 21**
12	R1/4	**3129 12 13**
12	R3/8	**3129 12 17**
12	R1/2	**3129 12 21**
14	R3/8	**3129 14 17**
14	R1/2	**3129 14 21**

3109 Male Stud Elbow, BSPT



ØD	C	Order code
4	R1/8	**3109 04 10**
4	R1/4	**3109 04 13**
4	R3/8	**3109 04 17**
6	R1/8	**3109 06 10**
6	R1/4	**3109 06 13**
6	R3/8	**3109 06 17**
8	R1/8	**3109 08 10**
8	R1/4	**3109 08 13**
8	R3/8	**3109 08 17**
8	R1/2	**3109 08 21**
10	R1/8	**3109 10 10**
10	R1/4	**3109 10 13**
10	R3/8	**3109 10 17**
10	R1/2	**3109 10 21**
12	R1/4	**3109 12 13**
12	R3/8	**3109 12 17**
12	R1/2	**3109 12 21**
14	R3/8	**3109 14 17**
14	R1/2	**3109 14 21**
16	R3/8	**3109 16 17**
16	R1/2	**3109 16 21**

3192 Female Stud Elbow BSPP



ØD	C	Order code
4	G1/8	**3192 04 10**
4	G1/4	**3192 04 13**
6	G1/8	**3192 06 10**
6	G1/4	**3192 06 13**
8	G1/8	**3192 08 10**
8	G1/4	**3192 08 13**
8	G3/8	**3192 08 17**
10	G1/4	**3192 10 13**
10	G3/8	**3192 10 17**
10	G1/2	**3192 10 21**
12	G1/2	**3192 12 21**

3108 Male Stud Branch Tee, BSPT



ØD	C	Order code
4	R1/8	**3108 04 10**
4	R1/4	**3108 04 13**
6	R1/8	**3108 06 10**
6	R1/4	**3108 06 13**
8	R1/8	**3108 08 10**
8	R1/4	**3108 08 13**
8	R3/8	**3108 08 17**
10	R1/4	**3108 10 13**
10	R3/8	**3108 10 17**
10	R1/2	**3108 10 21**
12	R1/4	**3108 12 13**
12	R3/8	**3108 12 17**
12	R1/2	**3108 12 21**
14	R3/8	**3108 14 17**
14	R1/2	**3108 14 21**
16	R3/8	**3108 16 17**
16	R1/2	**3108 16 21**

3198 Male Stud Branch Tee BSPP & M5



ØD	C	Order code
4	M5 x 0.8	**3198 04 19**
4	G1/8	**3198 04 10**
4	G1/4	**3198 04 13**
6	M5 x 0.8	**3198 06 19**
6	G1/8	**3198 06 10**
6	G1/4	**3198 06 13**
8	G1/8	**3198 08 10**
8	G1/4	**3198 08 13**
8	G3/8	**3198 08 17**
10	G1/4	**3198 10 13**
10	G3/8	**3198 10 17**
10	G1/2	**3198 10 21**
12	G1/4	**3198 12 13**
12	G3/8	**3198 12 17**
12	G1/2	**3198 12 21**
14	G3/8	**3198 14 17**
14	G1/2	**3198 14 21**
16	G3/8	**3198 16 17**
16	G1/2	**3198 16 21**

Tel: +45 63 12 83 00 | Email: ps@hymatik.com | www.hymatik.com | Hvidkaervej 27a, DK-5250 Odense SV, Denmark

LF 3000: Polymer Push-In Fittings - Threaded

-20°C to +80°C
20 bar max. (vacuum 755 mmHg)

3133 45° Male Elbow, BSPP & M5



ØD	C	Order code
4	M5 x 0.8	**3133 04 19**
4	G1/8	**3133 04 10**
6	M5 x 0.8	**3133 06 19**
6	G1/8	**3133 06 10**
6	G1/4	**3133 06 13**
8	G1/8	**3133 08 10**
8	G1/4	**3133 08 13**
8	G3/8	**3133 08 17**
10	G1/4	**3133 10 13**
10	G3/8	**3133 10 17**
10	G1/2	**3133 10 21**
12	G1/4	**3133 12 13**
12	G3/8	**3133 12 17**
12	G1/2	**3133 12 21**

3113 45° Male Elbow, BSPT



ØD	C	Order code
4	R1/8	**3113 04 10**
6	R1/8	**3113 06 10**
6	R1/4	**3113 06 13**
8	R1/8	**3113 08 10**
8	R1/4	**3113 08 13**
8	R3/8	**3113 08 17**
10	R1/4	**3113 10 13**
10	R3/8	**3113 10 17**
10	R1/2	**3113 10 21**
12	R1/4	**3113 12 13**
12	R3/8	**3113 12 17**
12	R1/2	**3113 12 21**

3193 Male Stud Run Tee, BSPP & M5



ØD	C	Order code
4	M5 x 0.8	**3193 04 19**
4	G1/8	**3193 04 10**
4	G1/4	**3193 04 13**
6	M5 x 0,8	**3193 06 19**
6	G1/8	**3193 06 10**
6	G1/4	**3193 06 13**
8	G1/8	**3193 08 10**
8	G1/4	**3193 08 13**
8	G3/8	**3193 08 17**
10	G1/4	**3193 10 13**
10	G3/8	**3193 10 17**
10	G1/2	**3193 10 21**
12	G1/4	**3193 12 13**
12	G3/8	**3193 12 17**
12	G1/2	**3193 12 21**
14	G3/8	**3193 14 17**
14	G1/2	**3193 14 21**
16	G3/8	**3193 16 17**
16	G1/2	**3193 16 21**

3103 Male Stud Run Tee, BSPT



ØD	C	Order code
4	R1/8	**3103 04 10**
4	R1/4	**3103 04 13**
6	R1/8	**3103 06 10**
6	R1/4	**3103 06 13**
8	R1/8	**3103 08 10**
8	R1/4	**3103 08 13**
8	R3/8	**3103 08 17**
10	R1/4	**3103 10 13**
10	R3/8	**3103 10 17**
10	R1/2	**3103 10 21**
12	R1/4	**3103 12 13**
12	R3/8	**3103 12 17**
12	R1/2	**3103 12 21**
14	R3/8	**3103 14 17**
14	R1/2	**3103 14 21**
16	R3/8	**3103 16 17**
16	R1/2	**3103 16 21**

3121 Male Standpipe BSPT



ØD	C	Order code
4	R1/8	**3121 04 10**
4	R1/4	**3121 04 13**
6	R1/8	**3121 06 10**
6	R1/4	**3121 06 13**
8	R1/8	**3121 08 10**
8	R1/4	**3121 08 13**
8	R3/8	**3121 08 17**
10	R1/4	**3121 10 13**
10	R3/8	**3121 10 17**
10	R1/2	**3121 10 21**
12	R3/8	**3121 12 17**
12	R1/2	**3121 12 21**
14	R1/2	**3121 14 21**

3131 Male Standpipe BSPP



ØD	C	Order code
4	M5 x 0.8	**3131 04 19**
4	G1/8	**3131 04 10**
4	G1/4	**3131 04 13**
6	G1/8	**3131 06 10**
6	G1/4	**3131 06 13**
8	G1/8	**3131 08 10**
8	G1/4	**3131 08 13**
8	G3/8	**3131 08 17**
10	G1/4	**3131 10 13**
10	G3/8	**3131 10 17**
10	G1/2	**3131 10 21**
12	G3/8	**3131 12 17**
12	G1/2	**3131 12 21**
14	G3/8	**3131 14 17**
14	G1/2	**3131 14 21**

Tel: +45 63 12 83 00 | Email: ps@hymatik.com | www.hymatik.com | Hvidkaervej 27a, DK-5250 Odense SV, Denmark

LF 3000: Polymer Push-In Fittings - Threaded

-20°C to +80°C
20 bar max. (vacuum 755 mmHg)

3158 “Y” piece, BSPP & M5



ØD	C	Order code
4	M5 x 0.8	**3158 04 19**
4	G1/8	**3158 04 10**
4	G1/4	**3158 04 13**
6	M5 x 0.8	**3158 06 19**
6	G1/8	**3158 06 10**
6	G1/4	**3158 06 13**
8	G1/8	**3158 08 10**
8	G1/4	**3158 08 13**
8	G3/8	**3158 08 17**
10	G1/4	**3158 10 13**
10	G3/8	**3158 10 17**
10	G1/2	**3158 10 21**
12	G3/8	**3158 12 17**
12	G1/2	**3158 12 21**

3132 Male Double “Y” BSPP



ØD	C	Order code
4	G1/8	**3132 04 10**
4	G1/4	**3132 04 13**
6	G1/8	**3132 06 10**
6	G1/4	**3132 06 13**

3118 Single Banjo, BSPP & M5



ØD	C	Order code
4	M5 x 0.8	**3118 04 19**
4	G1/8	**3118 04 10**
6	M5 x 0.8	**3118 06 19**
6	G1/8	**3118 06 10**
6	G1/4	**3118 06 13**
8	G1/8	**3118 08 10**
8	G1/4	**3118 08 13**
8	G3/8	**3118 08 17**
10	G1/4	**3118 10 13**
10	G3/8	**3118 10 17**
10	G1/2	**3118 10 21**
12	G3/8	**3118 12 17**
12	G1/2	**3118 12 21**

3149 Double Banjo, BSPP & M5



ØD	C	Order code
4	M5 x 0.8	**3149 04 19**
4	G1/8	**3149 04 10**
4	G1/4	**3149 04 13**
6	G1/8	**3149 06 10**
6	G1/4	**3149 06 13**
6	G3/8	**3149 06 17**
8	G1/4	**3149 08 13**
8	G3/8	**3149 08 17**
10	G3/8	**3149 10 17**

3119 Double banjo, BSPP & M5



ØD	C	Order code
4	M5 x 0.8	**3119 04 19**
4	G1/8	**3119 04 10**
6	G1/8	**3119 06 10**
6	G1/4	**3119 06 13**
8	G1/4	**3119 08 13**
8	G3/8	**3119 08 17**
10	G3/8	**3119 10 17**

3124 Single Banjo with Female, BSPP & M5



ØD	C	Order code
4	M5 x 0.8	**3124 04 19**
4	G1/8	**3124 04 10**
6	G1/4	**3124 06 13**
8	G3/8	**3124 08 17**

3189 Oscillating Compact Elbow, BSPP



ØD	C	Order code
4	G1/8	**3189 04 10**
6	G1/8	**3189 06 10**
6	G1/4	**3189 06 13**
8	G1/8	**3189 08 10**
8	G1/4	**3189 08 13**
8	G3/8	**3189 08 17**
10	G1/4	**3189 10 13**
10	G3/8	**3189 10 17**
12	G1/4	**3189 12 13**
12	G3/8	**3189 12 17**

3391 Self-Sealing Male Stud Fitting, BSPP



ØD	C	Order code
4	G1/8	**3391 04 10**
6	G1/8	**3391 06 10**
8	G1/8	**3391 08 10**
8	G1/4	**3391 08 13**
10	G3/8	**3391 10 17**

Parker Hannifin Corporation
Fluid Connectors Group

Tel: +45 63 12 83 00 | Email: ps@hymatik.com | www.hymatik.com | Hvidkaervej 27a, DK-5250 Odense SV, Denmark

LF 3000: Polymer Push-In Fittings - Union

-20°C to +80°C
20 bar max. (vacuum 755 mmHg)

3102 Equal Elbow



ØD	Order code
4	**3102 04 00**
6	**3102 06 00**
8	**3102 08 00**
10	**3102 10 00**
12	**3102 12 00**
14	**3102 14 00**
16	**3102 16 00**

3104 Tee - Equal & Unequal



ØD1	ØD2	Order code
4	4	**3104 04 00**
4	6	**3104 04 06**
6	4	**3104 06 04**
6	6	**3104 06 00**
6	8	**3104 06 08**
8	6	**3104 08 06**
8	8	**3104 08 00**
8	10	**3104 08 10**
10	8	**3104 10 08**
10	10	**3104 10 00**
10	12	**3104 10 12**
12	10	**3104 12 10**
12	12	**3104 12 00**
14	8	**3104 14 08**
14	14	**3104 14 00**
16	16	**3104 16 00**
16	12	**3104 16 12**

3106 Tube/Tube Connector - Equal & Unequal



ØD1	ØD2	Order code
4	4	**3106 04 00**
4	6	**3106 04 06**
4	8	**3106 04 08**
6	6	**3106 06 00**
6	8	**3106 06 08**
6	10	**3106 06 10**
8	8	**3106 08 00**
8	10	**3106 08 10**
8	12	**3106 08 12**
10	10	**3106 10 00**
10	12	**3106 10 12**
12	12	**3106 12 00**
12	14	**3106 12 14**
14	14	**3106 14 00**
16	16	**3106 16 00**
16	12	**3106 16 12**

3140 Single “Y” piece - Equal & Unequal



ØD1	ØD2	Order code
4	4	**3140 04 00**
4	6	**3140 04 06**
6	6	**3140 06 00**
6	8	**3140 06 08**
8	8	**3140 08 00**
10	10	**3140 10 00**
12	12	**3140 12 00**

3144 Multiple “Y” piece -Equal & Unequal



ØD1	ØD2	Order code
4	4	**3144 04 04**
4	6	**3144 04 06**
6	6	**3144 06 06**
6	8	**3144 06 08**

3304 Unequal Multiple Tee



ØD1	ØD2	Order code
6	4	**3304 06 04**
8	4	**3304 08 04**
8	6	**3304 08 06**
10	6	**3304 10 06**
10	8	**3304 10 08**

3306 Unequal Multiple Elbow



ØD1	ØD2	Order code
6	4	**3306 06 04**
8	4	**3306 08 04**
8	6	**3306 08 06**
10	6	**3306 10 06**
10	8	**3306 10 08**

3107 Cross - Equal & Unequal



ØD1	ØD2	Order code
4	4	**3107 04 00**
4	6	**3107 04 06**
6	6	**3107 06 00**
6	8	**3107 06 08**
8	8	**3107 08 00**

Tel: +45 63 12 83 00 | Email: ps@hymatik.com | www.hymatik.com | Hvidkaervej 27a, DK-5250 Odense SV, Denmark

LF 3000: Polymer Push-In Fittings - Union

-20°C to +80°C
20 bar max. (vacuum 755 mmHg)

3310 Manifold with LF3000



ØD1	ØD2	Order code
4	G1/4	**3310 04 13**
6	G1/4	**3310 06 13**
8	G3/8	**3310 08 17**
10	G1/2	**3310 10 21**
12	G1/2	**3310 12 21**

3151 End Cap with Push-In Connection



ØD	Order code
4	**3151 04 00**
6	**3151 06 00**
8	**3151 08 00**
10	**3151 10 00**
12	**3151 12 00**
14	**3151 14 00**

3116 Equal Bulkhead Connector



ØD	Order code
4	**3116 04 00**
6	**3116 06 00**
8	**3116 08 00**
10	**3116 10 00**
12	**3116 12 00**
14	**3116 14 00**

3136 Female Bulkhead Connector



ØD	C	Order code
4	G1/8	**3136 04 10**
4	G1/4	**3136 04 13**
6	G1/8	**3136 06 10**
6	G1/4	**3136 06 13**
6	G3/8	**3136 06 17**
8	G1/8	**3136 08 10**
8	G1/4	**3136 08 13**
10	G3/8	**3136 10 17**
12	G3/8	**3136 12 17**
12	G1/2	**3136 12 21**
16	G3/8	**3136 16 17**
16	G1/2	**3136 16 21**

3139 Equal Bulkhead Elbow



ØD	Order code
4	**3139 04 00**
6	**3139 06 00**
8	**3139 08 00**
10	**3139 10 00**
12	**3139 12 00**
14	**3139 14 00**

3182 Plug-In Equal Compact Elbow



ØD1	ØD2	Order code
4	4	**3182 04 00**
6	6	**3182 06 00**
8	8	**3182 08 00**
10	10	**3182 10 00**
12	12	**3182 12 00**

3188 Plug-In Equal Compact Tee



ØD1	ØD2	Order code
4	4	**3188 04 00**
6	6	**3188 06 00**
8	8	**3188 08 00**
10	10	**3188 10 00**
12	12	**3188 12 00**

3183 Plug-In Equal Run Tee



ØD1	ØD2	Order code
4	4	**3183 04 00**
6	6	**3183 06 00**
8	8	**3183 08 00**
10	10	**3183 10 00**
12	12	**3183 12 00**

3166 Reducer



ØD1	ØD2	Order code
4	6	**3166 04 06**
4	8	**3166 04 08**
4	10	**3166 04 10**
6	8	**3166 06 08**
6	10	**3166 06 10**
6	12	**3166 06 12**
6	14	**3166 06 14**
8	10	**3166 08 10**
8	12	**3166 08 12**
8	14	**3166 08 14**
10	12	**3166 10 12**
10	14	**3166 10 14**
12	14	**3166 12 14**

3168 Increaser



ØD1	ØD2	Order code
6	4	**3168 06 04**
8	6	**3168 08 06**
10	8	**3168 10 08**
12	10	**3168 12 10**

Tel: +45 63 12 83 00 | Email: ps@hymatik.com | www.hymatik.com | Hvidkaervej 27a, DK-5250 Odense SV, Denmark

LF 3000: Polymer Push-In Fittings - Union

-20°C to +80°C
20 bar max. (vacuum 755 mmHg)

3126 Blanking Plugs



ØD	Order code
4	**3126 04 00**
6	**3126 06 00**
8	**3126 08 00**
10	**3126 10 00**
12	**3126 12 00**
14	**3126 14 00**
16	**3126 16 00**

Clip Strips for Tubes



ØD	Order code
4	**Clip 04 00**
6	**Clip 06 00**
8	**Clip 08 00**
10	**Clip 10 00**
12	**Clip 12 00**
14	**Clip 14 00**

3100 Carstick



ØD	Order code
4	**3100 04 00**
6	**3100 06 00**
8	**3100 08 00**
10	**3100 10 00**
12	**3100 12 00**
14	**3100 14 00**

3379 DIN Rail Connector for 2 tubes in line



ØD	Order code
4	**3379 04 00**
6	**3379 06 00**
8	**3379 08 00**

3381 DIN Rail Connector for 3 Tubes



ØD	Order code
4	**3381 04 00**
6	**3381 06 00**
8	**3381 08 00**

3320 Multi-Connector Male Screw Body



o.d. tube	Number of outlets	Order code
4	2	**3320 04 00 02**
4	4	**3320 04 00 04**
4	7	**3320 04 00 07**
4	12	**3320 04 00 12**
6	2	**3320 06 00 02**
6	4	**3320 06 00 04**
6	7	**3320 06 00 07**
8	2	**3320 08 00 02**

3321 Multi-Connector Female Screw Body



o.d. tube	Number of outlets	Order code
4	2	**3321 04 00 02**
4	4	**3321 04 00 04**
4	7	**3321 04 00 07**
4	12	**3321 04 00 12**
6	4	**3321 06 00 04**
6	7	**3321 06 00 07**
8	2	**3321 08 00 02**

3329 Multi-Connector Screw Cap



Number of outlets	Order code
2	**3329 00 01**
4 - 7	**3329 00 02**
12	**3329 00 03**

Multi-Connector Assembly Photo



Tel: +45 63 12 83 00 | Email: ps@hymatik.com | www.hymatik.com | Hvidkaervej 27a, DK-5250 Odense SV, Denmark

Function Fittings: 3 mm Push-In Fittings

-15°C to +70°C
from 18 bar max.

3281 Male Stud Fitting, M3 and M5 Thread



ØD	C	Order code
3	M3x0.5	**3281 03 09**
3	M5x0.8	**3281 03 19**

3202 Equal Elbow



ØD	Order code
3	**3202 03 00**

3299 Compact Male Stud Elbow, M3 and M5 Thread



ØD	C	Order code
3	M3x0.5	**3299 03 09**
3	M5x0.8	**3299 03 19**

3204 Equal Tee



ØD	Order code
3	**3204 03 00**

3229 Extended Male Stud Elbow, M3 and M5 Thread



ØD	C	Order code
3	M3x0.5	**3229 03 09**
3	M5x0.8	**3229 03 19**

3266 4 mm to 3 mm Reducer



ØD	Order code
3	**3266 03 04**

3298 Male Stud Branch Tee, M3 and M5 Thread



ØD	C	Order code
3	M3x0.5	**3298 03 09**
3	M5x0.8	**3298 03 19**

3226 Blanking Plug



ØD	Order code
3	**3226 03 00**

3293 Male Stud Run Tee, M3 and M5 Thread



ØD	C	Order code
3	M3x0.5	**3293 03 09**
3	M5x0.8	**3293 03 19**

3218 Single Banjo, M3 and M5 Thread



ØD	C	Order code
3	M3x0.5	**3218 03 09**
3	M5x0.8	**3218 03 19**

3206 Equal Tube/Tube Connector



ØD	Order code
3	**3206 03 00**

Function Fittings: Flow Control Regulators

0°C to +70°C
from 1 to 10 bar max.

7060 Compact BSPP - exhaust (A)



ØD	C	Order code
4	G1/8	**7060 04 10**
6	G1/8	**7060 06 10**
6	G1/4	**7060 06 13**
8	G1/8	**7060 08 10**
8	G1/4	**7060 08 13**
8	G3/8	**7060 08 17**
10	G1/4	**7060 10 13**
10	G3/8	**7060 10 17**
12	G3/8	**7060 12 17**
12	G1/2	**7060 12 21**

7061 Compact BSPP - supply (B)



ØD	C	Order code
4	G1/8	**7061 04 10**
6	G1/8	**7061 06 10**
6	G1/4	**7061 06 13**
8	G1/8	**7061 08 10**
8	G1/4	**7061 08 13**
8	G3/8	**7061 08 17**
10	G1/4	**7061 10 13**
10	G3/8	**7061 10 17**
12	G1/2	**7061 12 21**

7062 Compact BSPP - bi-directional (C)



ØD	C	Order code
4	G1/8	**7062 04 10**
6	G1/8	**7062 06 10**
6	G1/4	**7062 06 13**
8	G1/8	**7062 08 10**
8	G1/4	**7062 08 13**
8	G3/8	**7062 08 17**

7660 Miniature BSPP & M5 - exhaust (A)



ØD	C	Order code
4	M5 x 0.8	**7660 04 19**
4	G1/8	**7660 04 10**
6	M5 x 0.8	**7660 06 19**
6	G1/8	**7660 06 10**
6	G1/4	**7660 06 13**
8	G1/8	**7660 08 10**
8	G1/4	**7660 08 13**
8	G3/8	**7660 08 17**

7662 Miniature BSPP & M5 - bi-directional (C)



ØD	C	Order code
4	M5 x 0,8	**7662 04 19**
4	G1/8	**7662 04 10**
6	M5 x 0,8	**7662 06 19**
6	G1/8	**7662 06 10**
6	G1/4	**7662 06 13**

7669 Miniature BSPP & M5 - supply (B)



ØD	C	Order code
4	M5 x 0.8	**7669 04 19**
4	G1/8	**7669 04 10**
6	M5 x 0.8	**7669 06 19**
6	G1/8	**7669 06 10**
6	G1/4	**7669 06 13**
8	G1/8	**7669 08 10**
8	G1/4	**7669 08 13**
8	G3/8	**7669 08 17**

7010 Recessed Adjust.Screw, BSPP & M5 - exhaust (A)



ØD	C	Order code
4	M5 x 0.8	**7010 04 19**
4	G1/8	**7010 04 10**
6	M5 x 0.8	**7010 06 19**
6	G1/8	**7010 06 10**
6	G1/4	**7010 06 13**
8	G1/8	**7010 08 10**
8	G1/4	**7010 08 13**
8	G3/8	**7010 08 17**
10	G1/4	**7010 10 13**
10	G3/8	**7010 10 17**
10	G1/2	**7010 10 21**
12	G3/8	**7010 12 17**
12	G1/2	**7010 12 21**

7011 Recessed Adjust.Screw, BSPP & M5 - supply (B)



ØD	C	Order code
4	M5 x 0.8	**7011 04 19**
4	G1/8	**7011 04 10**
6	M5 x 0.8	**7011 06 19**
6	G1/8	**7011 06 10**
6	G1/4	**7011 06 13**
8	G1/8	**7011 08 10**
8	G1/4	**7011 08 13**
8	G3/8	**7011 08 17**
10	G1/4	**7011 10 13**
10	G3/8	**7011 10 17**

7012 Recessed Adjust.Screw, BSPP & M5 - bi-directional (C)



ØD	C	Order code
4	M5 x 0,8	**7012 04 19**
4	G1/8	**7012 04 10**
6	M5 x 0,8	**7012 06 19**
6	G1/8	**7012 06 10**
6	G1/4	**7012 06 13**
8	G1/8	**7012 08 10**
8	G1/4	**7012 08 13**
8	G3/8	**7012 08 17**

Tel: +45 63 12 83 00 | Email: ps@hymatik.com | www.hymatik.com | Hvidkaervej 27a, DK-5250 Odense SV, Denmark

Function Fittings: Flow Control Regulators

0°C to +70°C
from 1 to 10 bar max.

7040 Compact Swivel Elbow, BSPP - exhaust (A)



ØD	C	Order code
6	G1/8	**7040 06 10**
6	G1/4	**7040 06 13**
8	G1/8	**7040 08 10**
8	G1/4	**7040 08 13**
8	G3/8	**7040 08 17**
10	G1/4	**7040 10 13**
10	G3/8	**7040 10 17**
12	G3/8	**7040 12 17**
12	G1/2	**7040 12 21**

7041 Compact Swivel Elbow, BSPP - supply (B)



ØD	C	Order code
6	G1/4	**7041 06 13**
8	G1/8	**7041 08 10**
8	G1/4	**7041 08 13**

7640 Miniature BSPP & Metric - exhaust (A)



ØD	C	Order code
4	M5 x 0,8	**7640 04 19**
4	G1/8	**7640 04 10**
6	M5 x 0,8	**7640 06 19**
6	G1/8	**7640 06 10**

7649 Miniature BSPP & Metric - supply (B)



ØD	C	Order code
4	M5 x 0,8	**7649 04 19**
4	G1/8	**7649 04 10**
6	M5 x 0,8	**7649 06 19**
6	G1/8	**7649 06 10**

7770 - In-line with push-in connection, One-Way Adjust (A)



ØD	Order code
4	**7770 04 00**
6	**7770 06 00**
8	**7770 08 00**
10	**7770 10 00**
12	**7770 12 00**

7772 - In-line with push-in connection, Bi-directional (C)



ØD	Order code
4	**7772 04 00**
6	**7772 06 00**
8	**7772 08 00**

7771 In-line with Threaded Connections, BSPP, One-Way Adjust (A)



C	Order code
G1/8	**7771 10 10**
G1/4	**7771 13 13**
G3/8	**7771 17 17**
G1/2	**7771 21 21**

7776 - In-line with push-in connection, One-Way Adjust (A), Panel Mountable



ØD	Order code
4	**7776 04 00**
6	**7776 06 00**
8	**7776 08 00**
10	**7776 10 00**
12	**7776 12 00**

7100 Compact with push-in connection, BSPP - exhaust (A)



ØD	C	Order code
4	G1/8	**7100 04 10**
6	G1/8	**7100 06 10**
6	G1/4	**7100 06 13**
8	G1/8	**7100 08 10**
8	G1/4	**7100 08 13**
8	G3/8	**7100 08 17**
10	G1/4	**7100 10 13**
10	G3/8	**7100 10 17**
12	G3/8	**7100 12 17**
12	G1/2	**7100 12 21**
14	G1/2	**7100 14 21**

7101 Compact with push-in connection, BSPP - supply (B)



ØD	C	Order code
4	G1/8	**7101 04 10**
6	G1/8	**7101 06 10**
6	G1/4	**7101 06 13**
8	G1/8	**7101 08 10**
8	G1/4	**7101 08 13**
8	G3/8	**7101 08 17**

7110 Compact with Threaded Fitting, BSPP - exhaust (A)



C	Order code
G1/8	**7110 10 10**
G1/4	**7110 13 13**
G3/8	**7110 17 17**
G1/2	**7110 21 21**

Parker Hannifin Corporation
Fluid Connectors Group

Tel: +45 63 12 83 00 | Email: ps@hymatik.com | www.hymatik.com | Hvidkaervej 27a, DK-5250 Odense SV, Denmark

Function Fittings: Flow Control Regulators

0°C to +70°C
from 1 to 10 bar max.

7111 Compact with Threaded Fitting, BSPP - supply (B)



C	Order code
G1/8	**7111 10 10**
G1/4	**7111 13 13**

7170 In-line Flow Regulator, BSPP & M5



Body in aluminium

C	Order code
M5	**7170 19 19**
G1/8	**7170 10 10**
G1/4	**7170 13 13**
G3/8	**7170 17 17**
G1/2	**7170 21 21**

7130 Recessed Adjust.Screw, BSPP & M5 - exhaust (A)



ØD	C	Order code
4	G1/8	**7130 04 10**
4	M5 x 0.8	**7130 04 19**
6	G1/8	**7130 06 10**
6	G1/4	**7130 06 13**
6	M5 x 0.8	**7130 06 19**
8	G1/8	**7130 08 10**
8	G1/4	**7130 08 13**
8	G3/8	**7130 08 17**
10	G1/4	**7130 10 13**
10	G3/8	**7130 10 17**
10	G1/2	**7130 10 21**
12	G3/8	**7130 12 17**
12	G1/2	**7130 12 21**

7140 Threaded Recessed Adjust.Screw, BSPP & M5 - exhaust (A)



C	Order code
M5 x 0.8	**7140 19 19**
G1/8	**7140 10 10**
G1/4	**7140 13 13**
G3/8	**7140 17 17**
G1/2	**7140 21 21**

7160 with Universal Brass Compression Fitting, Recessed Adjust. Screw, BSP - exhaust (A)



ØD	C	Order code
4	G1/8	**7160 04 10**
6	G1/8	**7160 06 10**
6	G1/4	**7160 06 13**
8	G1/8	**7160 08 10**
8	G1/4	**7160 08 13**
10	G1/4	**7160 10 13**
10	G3/8	**7160 10 17**
10	G1/2	**7160 10 21**
12	G3/8	**7160 12 17**
12	G1/2	**7160 12 21**

7762 with Universal Brass Compression Fitting, external adjust, BSPP - exhaust (A)



ØD	C	Order code
8	G1/8	**7762 08 10**
10	G1/4	**7762 10 13**
14	G3/8	**7762 14 17**
18	G1/2	**7762 18 21**

Tel: +45 63 12 83 00 | Email: ps@hymatik.com | www.hymatik.com | Hvidkaervej 27a, DK-5250 Odense SV, Denmark

Function Fittings: Non-Return Valves

0°C to +70°C
from 1 to 10 bar max.

7996 Non-Return Valve with push-in connection



ØD	Order code
4	**7996 04 00**
6	**7996 06 00**
8	**7996 08 00**
10	**7996 10 00**
12	**7996 12 00**

7994 Non-Return Valve with push-in connection, BSPP & M5 -exhaust (A)



ØD	C	Order code
4	M5 x 0.8	**7994 04 19**
4	G1/8	**7994 04 10**
6	G1/8	**7994 06 10**
6	G1/4	**7994 06 13**
8	G1/8	**7994 08 10**
8	G1/4	**7994 08 13**
10	G3/8	**7994 10 17**
12	G3/8	**7994 12 17**
12	G1/2	**7994 12 21**

7984 Non-Return Valve with push-in connection, BSPP & M5 -supply (B)



ØD	C	Order code
4	M5 x 0,8	**7984 04 19**
4	G1/8	**7984 04 10**
6	G1/8	**7984 06 10**
6	G1/4	**7984 06 13**
8	G1/8	**7984 08 10**
8	G1/4	**7984 08 13**
10	G3/8	**7984 10 17**
12	G3/8	**7984 12 17**
12	G1/2	**7984 12 21**

7930 Adjustable Check Valve, Double Female and BSPP and Metric Thread



ØC	Order code
M5 X 0.8	**7930 19 19**
G1/8	**7930 10 10**
G1/4	**7930 13 13**
G3/8	**7930 17 17**
G1/2	**7930 21 21**

7931 Adjustable Check Valve Supply, Male/Female BSPP Thread



ØC	Order code
G1/8	**7931 10 10**
G1/4	**7931 13 13**
G3/8	**7931 17 17**
G1/2	**7931 21 21**

7932 Adjustable Check Valve Exhaust, Male/Female BSPP Thread



ØC	Order code
G1/8	**7932 10 10**
G1/4	**7932 13 13**
G3/8	**7932 17 17**
G1/2	**7932 21 21**

Tel: +45 63 12 83 00 | Email: ps@hymatik.com | www.hymatik.com | Hvidkaervej 27a, DK-5250 Odense SV, Denmark

Function Fittings

-5°C to +60°C
from 1 to 10 bar max.

7892 Piloted Non-Return Valve, BSPP



ØD	C	Order code
6	G1/8	**7892 06 10**
6	G1/4	**7892 06 13**
8	G1/8	**7892 08 10**
8	G1/4	**7892 08 13**
8	G3/8	**7892 08 17**
10	G3/8	**7892 10 17**
10	G1/2	**7892 10 21**
12	G1/2	**7892 12 21**

7894 Piloted Non-Return Valve with Flow Regulator and Exhaust, BSPP



ØD	C	Order code
6	G1/8	**7894 06 10**
6	G1/4	**7894 06 13**
8	G1/8	**7894 08 10**
8	G1/4	**7894 08 13**
8	G3/8	**7894 08 17**
10	G3/8	**7894 10 17**
10	G1/2	**7894 10 21**
12	G1/2	**7894 12 21**

7880 Blocking Fitting, Male Thread BSPP, with push-in connection



ØD	C	Order code
6	G1/8	**7880 06 10**
6	G1/4	**7880 06 13**
8	G1/4	**7880 08 13**
8	G3/8	**7880 08 17**
10	G3/8	**7880 10 17**
12	G1/2	**7880 12 21**

7881 Blocking Fitting, Male, Threaded Port, BSPP



C1	C2	Order code
G1/8	G1/4	**7881 13 10**
G1/4	G1/4	**7881 13 13**
G3/8	G3/8	**7881 17 17**
G1/2	G1/2	**7881 21 21**

7883 Blocking Fitting, Male Thread BSPP, with push-in connection & flow regulator



ØD	C	Order code
4	G1/8	**7883 04 10**
6	G1/8	**7883 06 10**
6	G1/4	**7883 06 13**
8	G1/4	**7883 08 13**
8	G3/8	**7883 08 17**

7818 Sensor Fitting with push-in connection, pneumatic, BSPP & M5



C	Order code
M5 x 0,8	**7818 04 19**
G1/8	**7818 04 10**
G1/4	**7818 04 13**
G3/8	**7818 04 17**
G1/2	**7818 04 21**

7818 Sensor Fitting, Threaded Fittings, pneumatic, BSPP & M5



C	Order code
G1/8	**7818 19 10**
G1/4	**7818 19 13**

7828 Sensor Fitting, Pneumatic/Electric BSPP & M5



C	Order code
M5 x 0,8	**7828 00 19**
G1/8	**7828 00 10**
G1/4	**7828 00 13**
G3/8	**7828 00 17**
G1/2	**7828 00 21**

Tel: +45 63 12 83 00 | Email: ps@hymatik.com | www.hymatik.com | Hvidkaervej 27a, DK-5250 Odense SV, Denmark

Function Fittings

-15°C to +60°C
from 1 to 10 bar max.

7300 Pressure Regulator Fitting with push-in connection, BSPP



ØD	C	Order code
4	G1/8	**7300 04 10**
6	G1/8	**7300 06 10**
6	G1/4	**7300 06 13**
8	G1/8	**7300 08 10**
8	G1/4	**7300 08 13**
8	G3/8	**7300 08 17**
10	G1/4	**7300 10 13**
10	G3/8	**7300 10 17**

7318 Pressure Reducer, with push-in connection, BSPP



ØD	C	Order code
6	G1/8	**7318 06 10**
6	G1/4	**7318 06 13**
8	G1/4	**7318 08 13**
10	G1/4	**7318 10 13**
10	G3/8	**7318 10 17**

7316 Pressure Reducer, In-Line with push-in connection



ØD	Order code
6	**7316 06 00**
8	**7316 08 00**
10	**7316 10 00**

7860 Soft Start Valve with push-in connection, BSPP - for System isolating valve



ØD	C	Order code
8	G1/4	**7860 08 13**
10	G1/4	**7860 10 13**
10	G3/8	**7860 10 17**
12	G3/8	**7860 12 17**
12	G1/2	**7860 12 21**

7870 Soft Start Valve with push-in connection, BSPP - for Control valve



ØD	C	Order code
8	G1/4	**7870 08 13**
10	G1/4	**7870 10 13**
10	G3/8	**7870 10 17**

7861 Soft Start Valve with Threaded Fitting, BSPP - for system isolating valve



C	Order code
G1/4	**7861 13 13**
G3/8	**7861 17 17**
G1/2	**7861 21 21**

7800 3/2 Manual Switch Operated Valve, with push-in connection BSPP & M5 (supply)



ØD	C	Order code
4	M5 x 0.8	**7800 04 19**
4	G1/8	**7800 04 10**
6	M5 x 0.8	**7800 06 19**
6	G1/8	**7800 06 10**
6	G1/4	**7800 06 13**
8	G1/8	**7800 08 10**
8	G1/4	**7800 08 13**
10	G1/4	**7800 10 13**

7801 3/2 Manual Switch Operated Valve, with push-in connection BSPP & M5 (control)



ØD	C	Order code
4	G1/8	**7801 04 10**
6	G1/8	**7801 06 10**
6	G1/4	**7801 06 13**
8	G1/8	**7801 08 10**
8	G1/4	**7801 08 13**
10	G1/4	**7801 10 13**

7970 Elbow Quick Exhaust Valve, BSPP



C	Order code
M5	**7970 19 19**
G1/8	**7970 10 10**
G1/4	**7970 13 13**
G3/8	**7970 17 17**
G1/2	**7970 21 21**
G3/4	**7970 27 27**
G1"	**7970 34 34**

7971 In-Line Quick Exhaust Valve male BSPT, female BSPP



C	Order code
G1/8	**7971 10 10**
G1/4	**7971 13 13**
G3/8	**7971 17 17**
G1/2	**7971 21 21**

Parker Hannifin Corporation
Fluid Connectors Group

Tel: +45 63 12 83 00 | Email: ps@hymatik.com | www.hymatik.com | Hvidkaervej 27a, DK-5250 Odense SV, Denmark

Universal Compression Fittings

-60°C to +250°C / 550 bar max.
(depending on the tubing material)

0105 Male Stud Coupling, BSPT



ØD	C	Order code
6	R1/8	**0105 06 10**
6	R1/4	**0105 06 13**
8	R1/8	**0105 08 10**
8	R1/4	**0105 08 13**
8	R3/8	**0105 08 17**
10	R1/4	**0105 10 13**
10	R3/8	**0105 10 17**
12	R3/8	**0105 12 17**
12	R1/2	**0105 12 21**
16	R1/4	**0105 16 13**
18	R1/2	**0105 18 21**

0109 Male Stud Elbow, BSPT



ØD	C	Order code
6	R1/8	**0109 06 10**
6	R1/4	**0109 06 13**
8	R1/8	**0109 08 10**
8	R1/4	**0109 08 13**
10	R1/4	**0109 10 13**
10	R3/8	**0109 10 17**
12	R1/4	**0109 12 13**
12	R1/2	**0109 12 21**
16	R1/4	**0109 16 21**

0101 Male Stud Coupling, BSPP and Metric Thread



ØD	C	Order code
6	G1/8	**0101 06 10**
6	G1/4	**0101 06 13**
8	G1/8	**0101 08 10**
8	G1/4	**0101 08 13**
10	G1/4	**0101 10 13**
10	G3/8	**0101 10 17**
12	G3/8	**0101 12 17**
16	G1/2	**0101 16 21**

0118 Single Banjo, BSPP



ØD	C	Order code
6	G1/8	**0118 06 10**
6	G1/4	**0118 06 13**
8	G1/8	**0118 08 10**
8	G1/4	**0118 08 13**
10	G1/4	**0118 10 13**
10	G3/8	**0118 10 17**
12	G3/8	**0118 12 17**
16	G1/2	**0118 16 21**

0106 Equal Straight Coupling



ØD	Order code
4	**0106 04 00**
5	**0106 05 00**
6	**0106 06 00**
8	**0106 08 00**
10	**0106 10 00**
12	**0106 12 00**
14	**0106 14 00**
16	**0106 16 00**
18	**0106 18 00**
22	**0106 22 00**
25	**0106 25 00**
28	**0106 28 00**

0104 Equal Tee



ØD	Order code
4	**0104 04 00**
6	**0104 06 00**
8	**0104 08 00**
10	**0104 10 00**
12	**0104 12 00**
14	**0104 14 00**
15	**0104 15 00**
16	**0104 16 00**
18	**0104 18 00**
22	**0104 22 00**
25	**0104 25 00**
28	**0104 28 00**

0102 Equal Elbow



ØD	Order code
6	**0102 06 00**
8	**0102 08 00**
10	**0102 10 00**
12	**0102 12 00**
14	**0102 14 00**
15	**0102 15 00**
16	**0102 16 00**
18	**0102 18 00**
20	**0102 20 00**
22	**0102 22 00**

0122 Tailpiece Adaptor for Rubber Hose



ØD1	ØD2	Order code
4	4	**0122 04 04**
5	4	**0122 05 04**
6	4	**0122 06 04**
8	6	**0122 08 06**
10	7	**0122 10 07**
12	10	**0122 12 10**
14	13	**0122 14 13**
15	13	**0122 15 13**
16	13	**0122 16 13**
18	16	**0122 18 16**

Parker Hannifin Corporation
Fluid Connectors Group

Tel: +45 63 12 83 00 | Email: ps@hymatik.com | www.hymatik.com | Hvidkaervej 27a, DK-5250 Odense SV, Denmark

0,02 NL/h minimum flow

LF 3600: Chemical Nickel-Plated Brass Push-In Fittings

-25°C to +150°C
30 bar max.

3601 Male Stud, BSPP & M5



ØD	C	Order code
4	M5 x 0,8	**3601 04 19**
4	G1/8	**3601 04 10**
4	G1/4	**3601 04 13**
6	M5 x 0.8	**3601 06 19**
6	G1/8	**3601 06 10**
6	G1/4	**3601 06 13**
8	G1/8	**3601 08 10**
8	G1/4	**3601 08 13**
8	G3/8	**3601 08 17**
10	G1/4	**3601 10 13**
10	G3/8	**3601 10 17**
10	G1/2	**3601 10 21**
12	G1/4	**3601 12 13**
12	G3/8	**3601 12 17**
12	G1/2	**3601 12 21**
14	G3/8	**3601 14 17**
14	G1/2	**3601 14 21**

3699 Male Stud Elbow, BSPP & M5



20 bar max.

ØD	C	Order code
4	M5 x 0.8	**3699 04 19**
4	G1/8	**3699 04 10**
4	G1/4	**3699 04 13**
6	G1/8	**3699 06 10**
6	G1/4	**3699 06 13**
8	G1/8	**3699 08 10**
8	G1/4	**3699 08 13**
8	G3/8	**3699 08 17**
10	G1/4	**3699 10 13**
10	G3/8	**3699 10 17**
12	G1/4	**3699 12 13**
12	G3/8	**3699 12 17**
12	G1/2	**3699 12 21**
14	G3/8	**3699 14 17**
14	G1/2	**3699 14 21**

3675 Male Stud, BSPT



ØD	C	Order code
4	R1/8	**3675 04 10**
4	R1/4	**3675 04 13**
6	R1/8	**3675 06 10**
6	R1/4	**3675 06 13**
8	R1/8	**3675 08 10**
8	R1/4	**3675 08 13**
8	R3/8	**3675 08 17**
10	R1/4	**3675 10 13**
10	R3/8	**3675 10 17**
10	R1/2	**3675 10 21**
12	R1/4	**3675 12 13**
12	R3/8	**3675 12 17**
12	R1/2	**3675 12 21**
14	R3/8	**3675 14 17**
14	R1/2	**3675 14 21**

3609 Male Stud Elbow, BSPT



20 bar max.

ØD	C	Order code
4	R1/8	**3609 04 10**
4	R1/4	**3609 04 13**
6	R1/8	**3609 06 10**
6	R1/4	**3609 06 13**
8	R1/8	**3609 08 10**
8	R1/4	**3609 08 13**
8	R3/8	**3609 08 17**
10	R1/4	**3609 10 13**
10	R3/8	**3609 10 17**
12	R1/4	**3609 12 13**
12	R3/8	**3609 12 17**
12	R1/2	**3609 12 21**
14	R3/8	**3609 14 17**
14	R1/2	**3609 14 21**

3614 Female Stud, BSPP & Metric



ØD	C	Order code
4	M5 x 0,8	**3614 04 19**
4	G1/8	**3614 04 10**
4	G1/4	**3614 04 13**
6	G1/8	**3614 06 10**
6	G1/4	**3614 06 13**
8	G1/8	**3614 08 10**
8	G1/4	**3614 08 13**
10	G3/8	**3614 10 17**
12	G3/8	**3614 12 17**
12	G1/2	**3614 12 21**

3669 Extended Male Stud Elbow, BSPP & M5



ØD	C	Order code
4	M5 x 0.8	**3669 04 19**
4	G1/8	**3669 04 10**
6	G1/8	**3669 06 10**
6	G1/4	**3669 06 13**
8	G1/8	**3669 08 10**
8	G1/4	**3669 08 13**
10	G1/4	**3669 10 13**
10	G3/8	**3669 10 17**
12	G1/4	**3669 12 13**
12	G3/8	**3669 12 17**
14	G1/2	**3669 14 21**

Parker Hannifin Corporation
Fluid Connectors Group

Tel: +45 63 12 83 00 | Email: ps@hymatik.com | www.hymatik.com | Hvidkaervej 27a, DK-5250 Odense SV, Denmark

LF 3600: Chemical Nickel-Plated Brass Push-In Fittings

-25°C to +150°C
30 bar max.

3698 Male Stud Branch Tee, BSPP & M5



ØD	C	Order code
4	M5 x 0.8	**3698 04 19**
4	G1/8	**3698 04 10**
6	G1/8	**3698 06 10**
6	G1/4	**3698 06 13**
8	G1/8	**3698 08 10**
8	G1/4	**3698 08 13**
10	G1/4	**3698 10 13**
12	G3/8	**3698 12 17**
14	G1/2	**3698 14 21**

3693 Male Stud Run Tee, BSPP & M5



ØD	C	Order code
4	M5 x 0,8	**3693 04 19**
4	G1/8	**3693 04 10**
6	G1/8	**3693 06 10**
6	G1/4	**3693 06 13**
8	G1/8	**3693 08 10**
8	G1/4	**3693 08 13**
10	G1/4	**3693 10 13**
12	G3/8	**3693 12 17**
14	G1/2	**3693 14 21**

3618 Single Banjo, BSPP & M5



ØD	C	Order code
4	M5 x 0.8	**3618 04 19**
4	G1/8	**3618 04 10**
6	M5 x 0.8	**3618 06 19**
6	G1/8	**3618 06 10**
6	G1/4	**3618 06 13**
8	G1/8	**3618 08 10**
8	G1/4	**3618 08 13**
10	G3/8	**3618 10 17**

3602 Equal Elbow



ØD	Order code
4	**3602 04 00**
6	**3602 06 00**
8	**3602 08 00**
10	**3602 10 00**
12	**3602 12 00**
14	**3602 14 00**

3604 Equal Tee



ØD	Order code
4	**3604 04 00**
6	**3604 06 00**
8	**3604 08 00**
10	**3604 10 00**
12	**3604 12 00**
14	**3604 14 00**

3606 Equal Tube to Tube Connector



ØD	Order code
4	**3606 04 00**
6	**3606 06 00**
8	**3606 08 00**
10	**3606 10 00**
12	**3606 12 00**
14	**3606 14 00**

3616 Equal Bulkhead Connector



ØD	Order code
4	**3616 04 00**
6	**3616 06 00**
8	**3616 08 00**
10	**3616 10 00**
12	**3616 12 00**
14	**3616 14 00**

3636 Female Bulkhead Connector, BSPP



ØD	C	Order code
4	G1/8	**3636 04 10**
6	G1/8	**3636 06 10**
6	G1/4	**3636 06 13**
8	G1/8	**3636 08 10**
8	G1/4	**3636 08 13**
10	G3/8	**3636 10 17**
12	G3/8	**3636 12 17**
12	G1/2	**3636 12 21**

3639 Equal Bulkhead Elbow



ØD	Order code
4	**3639 04 00**
6	**3639 06 00**
8	**3639 08 00**
10	**3639 10 00**
12	**3639 12 00**
14	**3639 14 00**

Parker Hannifin Corporation
Fluid Connectors Group

Tel: +45 63 12 83 00 | Email: ps@hymatik.com | www.hymatik.com | Hvidkaervej 27a, DK-5250 Odense SV, Denmark

LF 3600: Chemical Nickel-Plated Brass Push-In Fittings

-25°C to +150°C
30 bar max.

3666 Plug-In Reducer



ØD1	ØD2	Order code
4	6	**3666 04 06**
4	8	**3666 04 08**
6	8	**3666 06 08**
6	10	**3666 06 10**
6	12	**3666 06 12**
8	10	**3666 08 10**
8	12	**3666 08 12**
8	14	**3666 08 14**
10	12	**3666 10 12**
10	14	**3666 10 14**
12	14	**3666 12 14**

3668 Plug-In Increaser



ØD1	ØD2	Order code
6	4	**3668 06 04**

3626 Blanking Plug



ØD	Order code
4	**3626 04 00**
6	**3626 06 00**
8	**3626 08 00**
10	**3626 10 00**
12	**3626 12 00**
14	**3626 14 00**

Parker Hannifin Corporation
Fluid Connectors Group

Tel: +45 63 12 83 00 | Email: ps@hymatik.com | www.hymatik.com | Hvidkaervej 27a, DK-5250 Odense SV, Denmark

Pneumatic Accessories in Nickel-Plated Brass

-10°C to +80°C
60 bar max.

0900 Straight Male, Unequal Adaptor, BSPT



C1	C2	Order code
R1/8	R1/8	**0900 00 10**
	R1/4	**0900 10 13**
	R3/8	**0900 10 17**
R1/4	R1/4	**0900 00 13**
	R3/8	**0900 13 17**
	R1/2	**0900 13 21**
R3/8	R3/8	**0900 00 17**
	R1/2	**0900 17 21**
R1/2	R1/2	**0900 00 21**
	R3/4	**0900 21 27**
R3/4	R3/4	**0900 00 27**
	R1	**0900 27 34**
R1	R1	**0900 00 34**

0901 Equal/Unequal Adaptor, BSPP & M5



C1	C2	Order code
M5x0.8	M5x0.8	**0901 00 19**
	G1/8	**0901 19 10**
G1/8	G1/8	**0901 00 10**
	G1/4	**0901 10 13**
	G3/8	**0901 10 17**
G1/4	G1/4	**0901 00 13**
	G3/8	**0901 13 17**
	G1/2	**0901 13 21**
G3/8	G3/8	**0901 00 17**
	G1/2	**0901 17 21**
G1/2	G1/2	**0901 00 21**
	G3/4	**0901 21 27**

0902 Staight Female, Equal/Unequal Adaptor, BSPP & M5



C1	C2	Order code
M5x0.8	M5x0.8	**0902 00 19**
	G1/8	**0902 19 10**
G1/8	G1/8	**0902 00 10**
	G1/4	**0902 10 13**
	G3/8	**0902 10 17**
	G1/2	**0902 10 21**
G1/4	G1/4	**0902 00 13**
	G3/8	**0902 13 17**
	G1/2	**0902 13 21**
G3/8	G3/8	**0902 00 17**
	G1/2	**0902 17 21**
G1/2	G1/2	**0902 00 21**
	G3/4	**0902 21 27**
	G1	**0902 21 34**
G3/4	G3/4	**0902 00 27**
	G1	**0902 27 34**

0904 Reducer Male BSPT to Female BSPP



C1	C2	Order code
R1/4	G1/8	**0904 10 13**
R3/8	G1/8	**0904 10 17**
R1/2	G1/8	**0904 10 21**
R3/8	G1/4	**0904 13 17**
R1/2	G1/4	**0904 13 21**
	G3/8	**0904 17 21**
R3/4	G3/8	**0904 17 27**
	G1/2	**0904 21 27**
R1	G1/2	**0904 21 34**
	G3/4	**0904 27 34**

0905 Reducer Male to Female BSPP & M5



C1	C2	Order code
G1/8	M5 x 0.8	**0905 19 10**
G1/4	G1/8	**0905 10 13**
G3/8	G1/8	**0905 10 17**
G3/8	G1/4	**0905 13 17**
G1/2	G1/4	**0905 13 21**
G1/2	G3/8	**0905 17 21**
G3/4	G3/8	**0905 17 27**
G3/4	G1/2	**0905 21 27**

0906 Increaser Male to Female BSPP & M5



C1	C2	Order code
M5x0.8	G1/8	**0906 10 19**
G1/8	G1/8	**0906 00 10**
	G1/4	**0906 10 13**
	G3/8	**0906 10 17**
G1/4	G1/4	**0906 00 13**
	G3/8	**0906 13 17**
	G1/2	**0906 13 21**
G3/8	G3/8	**0906 00 17**
	G1/2	**0906 17 21**
G1/2	G1/2	**0906 00 21**

0907 Female Extended Adaptor Male/Female BSPP



C	Order code
G1/8	**0907 00 10**
	0907 00 10 01
G1/4	**0907 00 13**
	0907 00 13 01

0912 Equal Female Stud Elbow, BSPP & M5



C	Order code
M5 x 0.8	**0912 00 19**
G1/8	**0912 00 10**
G1/4	**0912 00 13**
G3/8	**0912 00 17**
G1/2	**0912 00 21**
G3/4	**0912 00 27**
G1	**0912 00 34**

0913 Equal Female Stud Elbow BSPP, Male BSPT



C1	C2	Order code
R1/8	G1/8	**0913 00 10**
R1/4	G1/4	**0913 00 13**
R3/8	G3/8	**0913 00 17**
R1/2	G1/2	**0913 00 21**
R3/4	G3/4	**0913 00 27**
R1	G1	**0913 00 34**

Tel: +45 63 12 83 00 | Email: ps@hymatik.com | www.hymatik.com | Hvidkaervej 27a, DK-5250 Odense SV, Denmark

Pneumatic Accessories in Nickel-Plated Brass

-10°C to +80°C
60 bar max.*

0914 Equal Male Stud Elbow, BSPT



C	Order code
R1/8	**0914 00 10**
R1/4	**0914 00 13**
R3/8	**0914 00 17**
R1/2	**0914 00 21**
R3/4	**0914 00 27**
R1	**0914 00 34**

0915 Equal Female Tee, BSPP & M5



C	Order code
M5 x 0.8	**0915 00 19**
G1/8	**0915 00 10**
G1/4	**0915 00 13**
G3/8	**0915 00 17**
G1/2	**0915 00 21**
G3/4	**0915 00 27**
G1	**0915 00 34**

0916 Male Stud Branch Tee, Female BSPP & Male BSPT



C1	C2	Order code
R1/8	G1/8	**0916 00 10**
R1/4	G1/4	**0916 00 13**
R3/8	G3/8	**0916 00 17**
R1/2	G1/2	**0916 00 21**
R3/4	G3/4	**0916 00 27**
R1	G1	**0916 00 34**

0908 Equal Female Cross, BSPP



C	Order code
G1/8	**0908 00 10**
G1/4	**0908 00 13**
G3/8	**0908 00 17**
G1/2	**0908 00 21**

0909 Equal Cross, Female BSPP, Male BSPT



C1	C2	Order code
R1/8	G1/8	**0909 00 10**
R1/4	G1/4	**0909 00 13**
R3/8	G3/8	**0909 00 17**
R1/2	G1/2	**0909 00 21**

0920 Female Bulkhead Connector - BSPP & M5



C1	C2	Order code
M5 x 0.8	M10 x 1	**0920 00 19**
G1/8	M16 x 1.5	**0920 00 10**
G1/4	M20 x 1.5	**0920 00 13**
G3/8	M26 x 1.5	**0920 00 17**
G1/2	M28 x 1.5	**0920 00 21**

0931 Tailpiece Adaptor for Rubber Hose, Male BSPP



ØD	C	Order code
4	M5 x 0.8	**0931 04 19**
6	G1/8	**0931 06 10**
6	G1/4	**0931 06 13**
7	G1/8	**0931 07 10**
7	G1/4	**0931 07 13**
7	G3/8	**0931 07 17**
8	G1/8	**0931 08 10**
8	G1/4	**0931 08 13**
8	G3/8	**0931 08 17**
10	G1/4	**0931 10 13**
10	G3/8	**0931 10 17**
10	G1/2	**0931 10 21**
15	G3/8	**0931 15 17**
15	G1/2	**0931 15 21**
18	G1/2	**0931 18 21**

0919 Internal Hexagon Head Plug, BSPP & M5



C	Order code
M5 x 0,8	**0919 00 19**
G1/8	**0919 00 10**
G1/4	**0919 00 13**
G3/8	**0919 00 17**
G1/2	**0919 00 21**
G3/4	**0919 00 27**
G1	**0919 00 34**

0220 Brass Hexagon Headed Plug, BSPP & M5



C	Order code
M5 x 0,8	**0220 19 00**
G1/8	**0220 10 00**
G1/4	**0220 13 00**
G3/8	**0220 17 00**
G1/2	**0220 21 00**

0138 Sealing Copper Washers



C	Order code
G1/8	**0138 10 00**
G1/4	**0138 13 00**
G3/8	**0138 17 00**
G1/2	**0138 21 00**
G3/4	**0138 27 00**
G1	**0138 33 00**

* Technical specifications of nickel-plated brass accessories

Parker Hannifin Corporation
Fluid Connectors Group

Tel: +45 63 12 83 00 | Email: ps@hymatik.com | www.hymatik.com | Hvidkaervej 27a, DK-5250 Odense SV, Denmark

Pneumatic Accessories

Technical specifications of aluminium anodised manifolds
-10°C to +80°C
20 bar max.

0670 Threaded Silencer, BSPP



-20° to +150°C
12 bar

C	Order code
G1/8	**0670 00 10**
G1/4	**0670 00 13**
G3/8	**0670 00 17**
G1/2	**0670 00 21**
G3/4	**0670 00 27**
G1	**0670 00 34**

0673 Threaded Silencer, Male BSPP & M5



-20° to +150°C
12 bar

C	Order code
M5 x 0.8	**0673 00 19**
G1/8	**0673 00 10**
G1/4	**0673 00 13**
G3/8	**0673 00 17**
G1/2	**0673 00 21**

0672 Flow-Control Silencer, Male BSPP



-20° to +150°C
12 bar

C	Order code
G1/8	**0672 00 10**
G1/4	**0672 00 13**
G3/8	**0672 00 17**
G1/2	**0672 00 21**

0674 Threaded Silencer, Male BSPP & M5



-10° to +80°C
10 bar

C	Order code
M5 x 0.8	**0674 00 19**
G1/8	**0674 00 10**
G1/4	**0674 00 13**
G3/8	**0674 00 17**
G1/2	**0674 00 21**
G3/4	**0674 00 27**
G1	**0674 00 34**

0677 Silencer, Miniature, BSPP



-20° to +150°C
12 bar

C	Order code
G1/8	**0677 00 10**
G1/4	**0677 00 13**
G3/8	**0677 00 17**
G1/2	**0677 00 21**
G3/4	**0677 00 27**
G1	**0677 00 34**

0605 Fluoropolymer Tape



	Order code
	0605 12 12

-250° to +260°C

3311 Female Manifold BSPP & M5



C1	C2	Number of Outlets	Order code
G1/8	M5 x 0.8	7	**3311 19 10 07**
G1/4	G1/8	2	**3311 10 13 02**
G1/4	G1/8	3	**3311 10 13 03**
G1/4	G1/8	4	**3311 10 13 04**
G1/4	G1/8	5	**3311 10 13 05**
G1/4	G1/8	6	**3311 10 13 06**
G3/8	G1/4	2	**3311 13 17 02**
G3/8	G1/4	3	**3311 13 17 03**
G3/8	G1/4	4	**3311 13 17 04**
G3/8	G1/4	5	**3311 13 17 05**
G3/8	G1/4	6	**3311 13 17 06**

3313 Double Female Manifold BSPP



C1	C2	Number of Outlets	Order code
G1/4	G1/8	2	**3313101302**
G1/4	G1/8	3	**3313101303**
G1/4	G1/8	4	**3313101304**
G1/4	G1/8	5	**3313101305**
G3/8	G1/4	2	**3313131702**
G3/8	G1/4	3	**3313131703**
G3/8	G1/4	4	**3313131704**
G3/8	G1/4	5	**3313131705**
G1/2	G1/4	3	**3313132103**
G1/2	G1/4	4	**3313132104**
G1/2	G1/4	5	**3313132105**

3312 Female Cross Manifold BSPP & M5



C	Order code
M5 x 0.8	**3312 00 19**
G1/8	**3312 00 10**
G1/4	**3312 00 13**
G3/8	**3312 00 17**
G1/2	**3312 00 21**

Parker Hannifin Corporation
Fluid Connectors Group

Tel: +45 63 12 83 00 | Email: ps@hymatik.com | www.hymatik.com | Hvidkaervej 27a, DK-5250 Odense SV, Denmark

LF 3800: Stainless Steel Push-In Fittings

-25°C to +150°C
30 bar max.

3805 Male Stud, BSPT & M5



ØD	C	Order code
4	M5 x 0.8	**3805 04 19**
4	R1/8	**3805 04 10**
4	R1/4	**3805 04 13**
6	R1/8	**3805 06 10**
6	R1/4	**3805 06 13**
8	R1/8	**3805 08 10**
8	R1/4	**3805 08 13**
8	R3/8	**3805 08 17**
10	R1/4	**3805 10 13**
10	R3/8	**3805 10 17**
12	R1/4	**3805 12 13**
12	R3/8	**3805 12 17**
12	R1/2	**3805 12 21**

3801 Male Stud, BSPP & M5



ØD	C	Order code
4	M5 x 0.8	**3801 04 19**
4	G1/8	**3801 04 10**
6	M5 x 0.8	**3801 06 19**
6	G1/8	**3801 06 10**
6	G1/4	**3801 06 13**
8	G1/8	**3801 08 10**
8	G1/4	**3801 08 13**
8	G3/8	**3801 08 17**
10	G1/4	**3801 10 13**
10	G3/8	**3801 10 17**
12	G1/4	**3801 12 13**
12	G3/8	**3801 12 17**

3879 Male Stud Elbow, BSPP



20 bar max.

ØD	C	Order code
4	G1/8	**3879 04 10**
4	G1/4	**3879 04 13**
6	G1/8	**3879 06 10**
6	G1/4	**3879 06 13**
8	G1/8	**3879 08 10**
8	G1/4	**3879 08 13**
8	G3/8	**3879 08 17**
10	G1/4	**3879 10 13**
10	G3/8	**3879 10 17**
12	G1/4	**3879 12 13**
12	G3/8	**3879 12 17**
12	G1/2	**3879 12 21**

3816 Equal Bulkhead Union



IP55

ØD	Order code
4	**3816 04 00**
6	**3816 06 00**
8	**3816 08 00**
10	**3816 10 00**
12	**3816 12 00**

3889 Male Stud Elbow, BSPT



20 bar max.

ØD	C	Order code
4	R1/8	**3889 04 10**
4	R1/4	**3889 04 13**
6	R1/8	**3889 06 10**
6	R1/4	**3889 06 13**
8	R1/8	**3889 08 10**
8	R1/4	**3889 08 13**
8	R3/8	**3889 08 17**
10	R1/4	**3889 10 13**
10	R3/8	**3889 10 17**
12	R1/4	**3889 12 13**
12	R3/8	**3889 12 17**
12	R1/2	**3889 12 21**

3802 Equal Elbow



ØD	Order code
4	**3802 04 00**
6	**3802 06 00**
8	**3802 08 00**
10	**3802 10 00**
12	**3802 12 00**

3804 Equal Tee



ØD	Order code
4	**3804 04 00**
6	**3804 06 00**
8	**3804 08 00**
10	**3804 10 00**
12	**3804 12 00**

3806 Equal Straight Union



ØD	Order code
4	**3806 04 00**
6	**3806 06 00**
8	**3806 08 00**
10	**3806 10 00**
12	**3806 12 00**

3866 Plug-In Reducer

ØD1



ØD2

ØD1	ØD2	Order code
4	6	**3866 04 06**
4	8	**3866 04 08**
6	8	**3866 06 08**
6	10	**3866 06 10**
8	10	**3866 08 10**
8	12	**3866 08 12**
10	12	**3866 10 12**

Parker Hannifin Corporation
Fluid Connectors Group

Tel: +45 63 12 83 00 | Email: ps@hymatik.com | www.hymatik.com | Hvidkaervej 27a, DK-5250 Odense SV, Denmark

Stainless Steel Function Fittings

7810 Flow Regulator, threaded, BSPP - exhaust (A)



0° to +70°C
1 to 10 bar

C1	Order code
M5 x 0.8	**7810 19 19**
G1/8	**7810 10 10**
G1/4	**7810 13 13**
G3/8	**7810 17 17**
G1/2	**7810 21 21**

7812 Flow Regulator, threaded, BSPP - bi-directional (C)



0° to +70°C
1 to 10 bar

C1	Order code
M5 x 0.8	**7812 19 19**
G1/8	**7812 10 10**
G1/4	**7812 13 13**
G3/8	**7812 17 17**
G1/2	**7812 21 21**

7820 Flow Regulator, In-line, threaded connections BSPP, one way adjust (A)



-15° to +120°C
1 to 16 bar

C	(DN)	Order code
G1/8	7	**7820 00 10**
G1/4	7	**7820 00 13**
G3/8	9	**7820 00 17**
G1/2	12	**7820 00 21**

7822 Flow Regulator, In-line, threaded connections BSPP, bi-directional (C)



-15° to +120°C
1 to 40 bar

C	(DN)	Order code
G1/8	7	**7822 00 10**
G1/4	7	**7822 00 13**
G3/8	9	**7822 00 17**
G1/2	12	**7822 00 21**

4890 Non-Return Valve, Female-Female, BSPP



-20° to +180°C
0,5 to 40 bar

C	(DN)	Order code
G1/8	10	**4890 10 10**
G1/4	10	**4890 13 13**
G3/8	15	**4890 17 17**
G1/2	15	**4890 21 21**
G3/4	20	**4890 27 27**
G1"	25	**4890 34 34**

7899 Quick Exhaust Valve, Double Female, BSPP



-10° to +120°C (1/8,1/4)
-20° to +180°C (3/8,1")
2 to 10 bar

C	(DN)	Order code
G1/8	7	**7899 00 10**
G1/4	7	**7899 00 13**
G3/8	9	**7899 00 17**
G1/2	12	**7899 00 21**
G3/4	18	**7899 00 27**
G1	18	**7899 00 34**

0682 Threaded Silencer, Male BSPP



-20° to +180°C
12 bar max.

C	Order code
G1/8	**0682 00 10**
G1/4	**0682 00 13**
G3/8	**0682 00 17**
G1/2	**0682 00 21**
G3/4	**0682 00 27**
G1	**0682 00 34**

Parker Hannifin Corporation
Fluid Connectors Group

Tel: +45 63 12 83 00 | Email: ps@hymatik.com | www.hymatik.com | Hvidkaervej 27a, DK-5250 Odense SV, Denmark

Stainless Steel Accessories

-20°C to +180°C
150 bar max.

1843 Equal Elbow, Female BSPP



C	Order code
G1/8	**1843 10 10**
G1/4	**1843 13 13**
G3/8	**1843 17 17**
G1/2	**1843 21 21**
G3/4	**1843 27 27**
G1	**1843 34 34**

1844 Equal Male Stud Elbow, BSPT, female BSPP



C1	C2	Order code
R1/8	G1/8	**1844 10 10**
R1/4	G1/4	**1844 13 13**
R3/8	G3/8	**1844 17 17**
R1/2	G1/2	**1844 21 21**
R3/4	G3/4	**1844 27 27**
R1	G1	**1844 34 34**

1845 Equal Tee, Triple Female, BSPP



C	Order code
G1/8	**1845 10 10**
G1/4	**1845 13 13**
G3/8	**1845 17 17**
G1/2	**1845 21 21**
G3/4	**1845 27 27**
G1	**1845 34 34**

1855 Double Female Sleeve, BSPP



C	Order code
G1/8	**1855 10 10**
G1/4	**1855 13 13**
G3/8	**1855 17 17**
G1/2	**1855 21 21**
G3/4	**1855 27 27**
G1	**1855 34 34**

1817 Bulkhead Adaptor, BSPP



C	Order code
G1/8	**1817 00 10**
G1/4	**1817 00 13**
G3/8	**1817 00 17**
G1/2	**1817 00 21**
G3/4	**1817 00 27**
G1	**1817 00 34**

1864 Male NPT to Female BSPP Adaptor



C1	C2	Order code
1/8	G1/8	**1864 11 10**
1/4	G1/4	**1864 14 13**
3/8	G3/8	**1864 18 17**
1/2	G1/2	**1864 22 21**

1867 Male BSPT to Female NPT Adaptor



C1	C2	Order code
R1/8	1/8	**1867 10 11**
R1/4	1/4	**1867 13 14**
R3/8	3/8	**1867 17 18**
R1/2	1/2	**1867 21 22**

1863 Reducer BSPT to Female BSPP



C1	C2	Order code
R1/4	G1/8	**1863 13 10**
R3/8	G1/8	**1863 17 10**
R3/8	G1/4	**1863 17 13**
R1/2	G1/4	**1863 21 13**
R1/2	G3/8	**1863 21 17**
R3/4	G1/2	**1863 27 21**
R1	G3/4	**1863 34 27**

1823 Tailpiece Adaptor for Rubber Hose, Male BSPT



ØD	C	Order code
7	R1/8	**1823 07 10**
7	R1/4	**1823 07 13**
10	R1/4	**1823 10 13**
10	R3/8	**1823 10 17**
13	R3/8	**1823 13 17**
16	R1/2	**1823 16 21**

0285 Plug, Internal Hexagon Headed, BSPT



C	Order code
R1/8	**0285 10 00**
R1/4	**0285 13 00**
R3/8	**0285 17 00**
R1/2	**0285 21 00**
R3/4	**0285 27 00**
R1	**0285 34 00**

Tel: +45 63 12 83 00 | Email: ps@hymatik.com | www.hymatik.com | Hvidkaervej 27a, DK-5250 Odense SV, Denmark

Pneumatic Tubing

-40°C to +100°C
50 bar max.

1025P Semi-Rigid Polyamide Tubing, 25 m Rolls



o.d. tubing mm	i.d. tubing mm	R minimum bend radius for tube at ambient temp. in mm	Order code
3	1.8	6	**1025P03 00 18**
4	2.7	10	**1025P04 00 27**
4	2.7	10	**1025P04 01 27**
4	2.7	10	**1025P04 02 27**
4	2.7	10	**1025P04 03 27**
4	2.7	10	**1025P04 04 27**
4	2.7	10	**1025P04 05 27**
4	2.7	10	**1025P04 06 27**
6	4	15	**1025P06 00**
6	4	15	**1025P06 01**
6	4	15	**1025P06 02**
6	4	15	**1025P06 03**
6	4	15	**1025P06 04**
6	4	15	**1025P06 05**
6	4	15	**1025P06 06**
8	6	25	**1025P08 00**
8	6	25	**1025P08 01**
8	6	25	**1025P08 02**
8	6	25	**1025P08 03**
8	6	25	**1025P08 04**
8	6	25	**1025P08 05**
8	6	25	**1025P08 06**
10	7.5	42	**1025P10 00 75**
10	7.5	42	**1025P10 01 75**
10	7.5	42	**1025P10 04 75**
12	9	47	**1025P12 00 09**
12	9	47	**1025P12 01 09**
12	9	47	**1025P12 04 09**
14	11	80	**1025P14 00 11**
14	11	80	**1025P14 01 11**
14	11	80	**1025P14 04 11**
16	13	90	**1025P16 04 13**

2005P-2010P Semi-rigid Polyamide, 500m & 1000m Reels



o.d. tubing mm	i.d. tubing mm	R minimum bend radius for tube at ambient temp. in mm	Order code
4	2.7	10	**2010P04 00 27**
4	2.7	10	**2010P04 01 27**
4	2.7	10	**2010P04 04 27**
6	4	15	**2010P06 00**
6	4	15	**2010P06 01**
6	4	15	**2010P06 04**
8	6	25	**2005P08 00**
8	6	25	**2005P08 01**
8	6	25	**2005P08 04**
10	8	50	**2005P10 00**
10	8	50	**2005P10 01**
10	8	50	**2005P10 04**

1010P Multitube Semi-Rigid Polyamide



o.d. PVC sheath mm mm	o.d. x i.d. semi rigid nylon	R minimum bend radius at 20°C mm	Number of tubes	Order code
13.5	4 x 2.7	35	4	**1010P04 00M04**
16	4 x 2.7	45	7	**1010P04 00M07**
18.5	6 x 4	55	4	**1010P06 00M04**
22	6 x 4	60	7	**1010P06 00M07**
19.2	8 x 6	45	2	**1010P08 00M02**

1100P Semi-Rigid Polyamide Tubing,100 m Rolls



o.d. tubing mm	i.d. tubing mm	R minimum bend radius for tube at ambient temp. in mm	Order code
4	2.7	10	**1100P04 00 27**
4	2.7	10	**1100P04 01 27**
4	2.7	10	**1100P04 02 27**
4	2.7	10	**1100P04 03 27**
4	2.7	10	**1100P04 04 27**
4	2.7	10	**1100P04 05 27**
4	2.7	10	**1100P04 06 27**
6	4	15	**1100P06 00**
6	4	15	**1100P06 01**
6	4	15	**1100P06 02**
6	4	15	**1100P06 03**
6	4	15	**1100P06 04**
6	4	15	**1100P06 05**
6	4	15	**1100P06 06**
8	6	15	**1100P08 00**
8	6	15	**1100P08 01**
8	6	15	**1100P08 02**
8	6	15	**1100P08 03**
8	6	15	**1100P08 04**
8	6	15	**1100P08 05**
8	6	15	**1100P08 06**
10	7.5	42	**1100P10 00 75**
10	7.5	42	**1100P10 01 75**
10	7.5	42	**1100P10 04 75**
12	9	42	**1100P12 00 09**
12	9	47	**1100P12 01 09**
12	9	47	**1100P12 04 09**
14	12	116	**1100P14 00**
14	12	116	**1100P14 01**
14	12	116	**1100P14 04**

Tel: +45 63 12 83 00 | Email: ps@hymatik.com | www.hymatik.com | Hvidkaervej 27a, DK-5250 Odense SV, Denmark

Pneumatic Tubing

-40°C to +100°C
50 bar max. (vacuum 755mHg)

Fireproof High Resistant Polyamide Tubing



o.d. tubing mm	i.d. tubing mm	R minimum bend radius for tube at ambient temp. in mm	Order code
Length: 100 m			
4	2	17	**1100P04R00**
4	2	17	**1100P04R01**
4	2	17	**1100P04R04**
6	4	29	**1100P06R00**
6	4	29	**1100P06R03**
6	4	29	**1100P06R04**
8	6	40	**1100P08R00**
8	6	40	**1100P08R01**
8	6	40	**1100P08R04**
10	8	77	**1100P10R00**
10	8	77	**1100P10R01**
10	8	77	**1100P10R04**
12	10	92	**1100P12R00**
12	10	92	**1100P12R01**
12	10	92	**1100P12R04**

1025U Anti-Spark Single Layer Polyurethane Tubing, 25 m Rolls



o.d. tubing mm	i.d. tubing mm	R minimum bend radius for tube at 20°C in mm	Order code
4	2.5	12	**1025U04K01**
6	4	15	**1025U06K01**
8	5.5	20	**1025U08K01**
10	7	25	**1025U10K01**
12	8	35	**1025U12K01**

2005U-2010U Polyurethane Tubing, 500m & 1000m Reels



o.d. tubing mm	i.d. tubing mm	Minimum bend radius for tube at ambient temp. in mm		Order code
		Polyester	Polyether	
4	2.5		12	**1010U04R08**
4	2.7	12		**2010U04 01**
4	2.7	12		**2010U04 04**
6	4		15	**2010U06R08**
6	4	15		**2010U06 01**
6	4	15		**2010U06 04**
8	5.5		20	**2005U08R08**
8	5.5	20		**2005U08 01**
8	5.5	20		**2005U08 04**

Parker Hannifin Corporation
Fluid Connectors Group

Tel: +45 63 12 83 00 | Email: ps@hymatik.com | www.hymatik.com | Hvidkaervej 27a, DK-5250 Odense SV, Denmark

Pneumatic Tubing

-20°C to +70°C
12 bar max.

1025U Flexible Polyurethane Tubing, 25 m Rolls



o.d. tubing mm	i.d. tubing mm	Minimum bend radius for tube at ambient temp. in mm Polyester	Polyether	Order code	
4	2.5	10		**1025U04 01**	
4	2.5	10		**1025U04 02**	
4	2.5	10		**1025U04 03**	
4	2.5	10		**1025U04 04**	
4	2.5	10		**1025U04 05**	
4	2.5	10		**1025U04 06**	
4	2.5		12	**1025U04R08**	
6	4	15		**1025U06 01**	
6	4	15		**1025U06 02**	
6	4	15		**1025U06 03**	
6	4	15		**1025U06 04**	
6	4	15		**1025U06 05**	
6	4	15		**1025U06 06**	
6	4		15	**1025U06R08**	
8	5.5	20		**1025U08 01**	
8	5.5	20		**1025U08 02**	
8	5.5	20		**1025U08 03**	
8	5.5	20		**1025U08 04**	
8	5.5	20		**1025U08 05**	
8	5.5	20		**1025U08 06**	
8	5.5		20	**1025U08 R08**	
10	7	25		**1025U10 01**	
10	7	25		**1025U10 04**	
10	7		25	**1025U10 R08**	
12	8	35		**1025U12 01**	
12	8	35		**1025U12 04**	
12	8		35	**1025U12R08**	
14	9.5	45		**1025U14 01 95**	
14	9.5	45		**1025U14 04 95**	
14	9.5		45	**1025U14R08 95**	
16	11	45		**1025U16R08 11**	
16	11	45		**1025U16 01 11**	
16	11	45		**1025U16 02 11**	
16	11	45		**1025U16 03 11**	
16	11	45		**1025U16 04 11**	

1100U Flexible Polyurethane Tubing, 100m Rolls



o.d. tubing mm	i.d. tubing mm	Minimum bend radius for tube at ambient temp. in mm Polyester	Polyether	Order code	
4	2.5	10		**1100U04 01**	
4	2.5	10		**1100U04 02**	
4	2.5	10		**1100U04 03**	
4	2.5	10		**1100U04 04**	
4	2.5	10		**1100U04 05**	
4	2.5	10		**1100U04 06**	
4	2.5		12	**1100U04R08**	
6	4	15		**1100U06 01**	
6	4	15		**1100U06 02**	
6	4	15		**1100U06 03**	
6	4	15		**1100U06 04**	
6	4	15		**1100U06 05**	
6	4	15		**1100U06 06**	
6	4		15	**1100U06R08**	
8	5.5	20		**1100U08 01**	
8	5.5	20		**1100U08 02**	
8	5.5	20		**1100U08 03**	
8	5.5	20		**1100U08 04**	
8	5.5	20		**1100U08 05**	
8	5.5	20		**1100U08 06**	
8	5.5		20	**1100U08R08**	
10	7	25		**1100U10 01**	
10	7	25		**1100U10 04**	
10	7		25	**1100U10R08**	
12	8	35		**1100U12 01**	
12	8	35		**1100U12 04**	
12	8		35	**1100U12R08**	
14	9.5	45		**1100U14 01 95**	
14	9.5	45		**1100U14 04 95**	
14	9.5		45	**1100U14R08 95**	
16	11	45		**1100U16R08 11**	
16	11	45		**1100U16 01 11**	
16	11	45		**1100U16 02 11**	
16	11	45		**1100U16 03 11**	
16	11	45		**1100U16 04 11**	

Pneumatic Tubing

-40°C to +95°C
16 bar max.

1100U Anti-Static Polyurethane Tubing



Resistivity: 10^3 to 10^6 Ω

o.d. tubing mm	i.d. tubing mm	R minimum bend radius for tube at 20°C in mm	Order code
3	1.8	10	**1100U03A01**
4	2.5	12	**1100U04A01**
6	4	15	**1100U06A01**
8	5.5	25	**1100U08A01**
10	7	35	**1100U10A01**
12	8	45	**1100U12A01**

1420U Flexible Polyurethane Twin Tubing



o.d. tubing mm	i.d. tubing mm	R minimum bend radius for tube at 20°C in mm	Order code
4	2.5	12	**1420U04 11**
4	2.5	12	**1420U04 44**
4	2.5	12	**1420U04 41**
6	4	15	**1420U06 11**
6	4	15	**1420U06 44**
6	4	15	**1420U06 41**
8	5.5	20	**1420U08 11**
8	5.5	20	**1420U08 44**
8	5.5	20	**1420U08 41**

1015Y..F Advanced Polyethylene (APE) Tubing



Drum 150 m

o.d. tubing mm	i.d. tubing mm	Minimum bend radius for tube at ambient temp. in mm Polyethylene	Order code
4	2.5	16	**1015Y04F00**
4	2.5	16	**1015Y04F01**
4	2.5	16	**1015Y04F02**
4	2.5	16	**1015Y04F03**
4	2.5	16	**1015Y04F04**
4	2.5	16	**1015Y04F05**
4	2.5	16	**1015Y04F10**
6	4	32	**1015Y06F00**
6	4	32	**1015Y06F01**
6	4	32	**1015Y06F02**
6	4	32	**1015Y06F03**
6	4	32	**1015Y06F04**
6	4	32	**1015Y06F05**
6	4	32	**1015Y06F10**
8	5.75	40	**1015Y08F00**
8	5.75	40	**1015Y08F01**
8	5.75	40	**1015Y08F02**
8	5.75	40	**1015Y08F03**
8	5.75	40	**1015Y08F04**
8	5.75	40	**1015Y08F05**
8	5.75	40	**1015Y08F10**
10	7	40	**1015Y10F00**
10	7	40	**1015Y10F01**
10	7	40	**1015Y10F02**
10	7	40	**1015Y10F03**
10	7	40	**1015Y10F04**
10	7	40	**1015Y10F05**
10	7	40	**1015Y10F10**

Parker Hannifin Corporation
Fluid Connectors Group

Tel: +45 63 12 83 00 | Email: ps@hymatik.com | www.hymatik.com | Hvidkaervej 27a, DK-5250 Odense SV, Denmark

1030Y..F Advanced Polyethylene (APE) Tubing



Drum 300 m

o.d. tubing mm	i.d. tubing mm	Minimum bend radius for tube at ambient temp. in mm Polyethylene	Order code
4	2.5	16	**1030Y04F00**
4	2.5	16	**1030Y04F01**
4	2.5	16	**1030Y04F02**
4	2.5	16	**1030Y04F03**
4	2.5	16	**1030Y04F04**
4	2.5	16	**1030Y04F05**
4	2.5	16	**1030Y04F10**
6	4	32	**1030Y06F00**
6	4	32	**1030Y06F01**
6	4	32	**1030Y06F02**
6	4	32	**1030Y06F03**
6	4	32	**1030Y06F04**
6	4	32	**1030Y06F05**
6	4	32	**1030Y06F10**

1075Y..F Advanced Polyethylene (APE) Tubing



Drum 75 m

o.d. tubing mm	i.d. tubing mm	Minimum bend radius for tube at ambient temp. in mm Polyethylene	Order code
12	9	55	**1075Y12F00**
12	9	55	**1075Y12F01**
12	9	55	**1075Y12F02**
12	9	55	**1075Y12F03**
12	9	55	**1075Y12F04**
12	9	55	**1075Y12F05**
12	9	55	**1075Y12F10**
14	11	75	**1075Y14F00**
16	13	95	**1075Y16F00**

1096Y..F Advanced Polyethylene (APE) Tubing



Drum 250 m

o.d. tubing inch	i.d. tubing inch	Minimum bend radius for tube at ambient temp. in mm Polyethylene	Order code
1/2	0.375	1.96	**1096Y62F00**
1/2	0.375	1.96	**1096Y62F01**
1/2	0.375	1.96	**1096Y62F02**
1/2	0.375	1.96	**1096Y62F03**
1/2	0.375	1.96	**1096Y62F04**
1/2	0.375	1.96	**1096Y62F05**
1/2	0.375	1.96	**1096Y62F10**

1098Y..F Advanced Polyethylene (APE) Tubing



Drum 500 m

o.d. tubing inch	i.d. tubing inch	Minimum bend radius for tube at ambient temp. in mm Polyethylene	Order code
1/4	0.170	0.78	**1098Y56F00**
1/4	0.170	0.78	**1098Y56F01**
1/4	0.170	0.78	**1098Y56F02**
1/4	0.170	0.78	**1098Y56F03**
1/4	0.170	0.78	**1098Y56F04**
1/4	0.170	0.78	**1098Y56F05**
1/4	0.170	0.78	**1098Y56F10**
3/8	0.250	1.18	**1098Y60F00**
3/8	0.250	1.18	**1098Y60F01**
3/8	0.250	1.18	**1098Y60F02**
3/8	0.250	1.18	**1098Y60F03**
3/8	0.250	1.18	**1098Y60F04**
3/8	0.250	1.18	**1098Y60F05**
3/8	0.250	1.18	**1098Y60F10**

1099Y..F Advanced Polyethylene (APE) Tubing



Drum 1000 m

o.d. tubing inch	i.d. tubing inch	Minimum bend radius for tube at ambient temp. in mm Polyethylene	Order code
1/4	0.170	0.78	**1099Y56F00**
1/4	0.170	0.78	**1099Y56F01**
1/4	0.170	0.78	**1099Y56F02**
1/4	0.170	0.78	**1099Y56F03**
1/4	0.170	0.78	**1099Y56F04**
1/4	0.170	0.78	**1099Y56F05**
1/4	0.170	0.78	**1099Y56F10**

Parker Hannifin Corporation
Fluid Connectors Group

Tel: +45 63 12 83 00 | Email: ps@hymatik.com | www.hymatik.com | Hvidkaervej 27a, DK-5250 Odense SV, Denmark

Pneumatic Tubing

PFA Tubing



-196°C to +260°C
36 bar max. (vacuum 755mHg)

o.d. tubing mm	i.d. tubing mm	R minimum bend radius for tube at ambient temp. in mm	Order code	
Length: 10 m				
4	2	12	**1010T04P00**	
4	2	12	**1010T04A01**	
4	2	12	**1010T04P12**	
4	2	12	**1010T04P13**	
4	2	12	**1010T04P14**	
6	4	34	**1010T06P00**	
6	4	34	**1010T06A01**	
6	4	34	**1010T06P12**	
6	4	34	**1010T06P13**	
6	4	34	**1010T06P14**	
8	6	60	**1010T08P00**	
8	6	60	**1010T08A01**	
8	6	60	**1010T08P12**	
8	6	60	**1010T08P13**	
8	6	60	**1010T08P14**	
10	8	95	**1010T10P00**	
12	9	120	**1010T12P00**	
Length: 50 m				
4	2	12	**1050T04P00**	
4	2	12	**1050T04A01**	
4	2	12	**1050T04P12**	
4	2	12	**1050T04P13**	
4	2	12	**1050T04P14**	
6	4	34	**1050T06P00**	
6	4	34	**1050T06A01**	
6	4	34	**1050T06P12**	
6	4	34	**1050T06P13**	
6	4	34	**1050T06P14**	
8	6	60	**1050T08P00**	
8	6	60	**1050T08A01**	
8	6	60	**1050T08P12**	
8	6	60	**1050T08P13**	
8	6	60	**1050T08P14**	
10	8	95	**1050T10P00**	
12	9	120	**1050T12P00**	

PFA Tubing



Length: 100 m				
4	2	12	**1100T04P00**	
6	4	34	**1100T06P00**	
8	6	60	**1100T08P00**	
10	8	95	**1100T10P00**	
12	9	120	**1100T12P00**	

Parker Hannifin Corporation
Fluid Connectors Group

Tel: +45 63 12 83 00 | Email: ps@hymatik.com | www.hymatik.com | Hvidkaervej 27a, DK-5250 Odense SV, Denmark

Pneumatic Tubing

-20°C to +70°C
10 bar max.

1005T Fluoropolymer FEP 140 Tubing, 5m Rolls



-40°C to +150°C
28 bar max.

o.d. tubing mm	i.d. tubing mm	R minimum bend radius for tube at ambient temp. in mm	Order code
4	2.5	40	**1005T04 00 25**
6	4	50	**1005T06 00**
8	6	70	**1005T08 00**
10	8	120	**1005T10 00**
12	10	180	**1005T12 00**

1025T Fluoropolymer FEP 140 Tubing, 25m Rolls



-40°C to +150°C
28 bar max.

o.d. tubing mm	i.d. tubing mm	R minimum bend radius for tube at ambient temp. in mm	Order code
4	2.5	40	**1025T04 00 25**
6	4	50	**1025T06 00**
8	6	70	**1025T08 00**
10	8	120	**1025T10 00**
12	10	180	**1025T12 00**

1460U Polyurethane Recoil Tubing, without connectors, 2 m long



o.d. tubing mm	i.d. tubing mm	Order code
8	5	**1460U08 04**
10	7	**1460U10 04**
12	8	**1460U12 04**

1461U Polyurethane Recoil Tubing, without connectors, 4 m long



o.d. tubing mm	i.d. tubing mm	Order code
8	5	**1461U08 04**
10	7	**1461U10 04**
12	8	**1461U12 04**

1462U Polyurethane Recoil Tubing, without connectors 6 m long



o.d. tubing mm	i.d. tubing mm	Order code
8	5	**1462U08 04**
10	7	**1462U10 04**
12	8	**1462U12 04**

0694 Instant Fitting, with protection spring, BSPP



ØD	C	Order code
8	G1/4	**0694 08 13**
10	G1/4	**0694 10 13**
12	G3/8	**0694 12 17**

1470U Polyurethane Recoil Tubing, 2 m long, with Threaded Stem BSPT Thread



o.d. tubing mm	i.d. tubing mm	BSPT thread	Order code
8	5	R1/4	**1470U08 03 13**
8	5	R1/4	**1470U08 04 13**
8	5	R1/4	**1470U08 05 13**

1471U Polyurethane Recoil Tubing, 4 m long, with Threaded Stem BSPT Thread



o.d. tubing mm	i.d. tubing mm	BSPT thread	Order code
8	5	R1/4	**1471U08 03 13**
8	5	R1/4	**1471U08 04 13**
8	5	R1/4	**1471U08 05 13**

1472U Polyurethane Recoil Tubing, 6 m long, with Threaded Stem BSPT Thread



o.d. tubing mm	i.d. tubing mm	BSPT thread	Order code
8	5	R1/4	**1472U08 03 13**
8	5	R1/4	**1472U08 04 13**
8	5	R1/4	**1472U08 05 13**

Parker Hannifin Corporation
Fluid Connectors Group

Tel: +45 63 12 83 00 | Email: ps@hymatik.com | www.hymatik.com | Hvidkaervej 27a, DK-5250 Odense SV, Denmark

Pneumatic Tubing

1040H Self-Fastening Hose, in 40m rolls



-20°C to +100°C
16 bar max.

DN	i.d. tubing mm	R minimum bend radius at 20°C (mm)	Order code	
1/4	6.3	60	**1040H56 02**	
1/4	6.3	60	**1040H56 03**	
3/8	9.5	70	**1040H60 02**	
3/8	9.5	70	**1040H60 03**	
1/2	12.7	120	**1040H62 02**	
1/2	12.7	120	**1040H62 03**	
5/8	15.9	140	**1040H66 02**	
5/8	15.9	140	**1040H66 03**	
3/4	19.1	170	**1040H69 02**	
3/4	19.1	170	**1040H69 03**	

1080H Self-Fastening Hose, in 80m rolls



-20°C to +100°C
16 bars max.

DN	i.d. tubing mm	R minimum bend radius at 20°C (mm)	Order code	
5/8	15.9	140	**1080H66 02**	
5/8	15.9	140	**1080H66 03**	
3/4	19.1	170	**1080H69 02**	
3/4	19.1	170	**1080H69 03**	

1100H Self-Fastening Hose, in 100m rolls



-20°C to +100°C
16 bar max.

DN	i.d. tubing mm	R minimum bend radius at 20°C (mm)	Order code	
1/4	6.3	60	**1100H56 02**	
1/4	6.3	60	**1100H56 03**	
3/8	9.5	70	**1100H60 02**	
3/8	9.5	70	**1100H60 03**	
1/2	12.7	120	**1100H62 02**	
1/2	12.7	120	**1100H62 03**	

1025V Braided PVC Hose, 25 m Rolls



-20° to +70°C
15 bar

o.d. tubing mm	i.d. tubing mm	R minimum bend radius for tube at 20°C in mm	Order code
8	4	10	**1025V08 00 04**
11	6	12	**1025V11 00 06**
13	7	14	**1025V13 00 07**
14	8	16	**1025V14 00 08**
16	10	25	**1025V16 00 10**
18	12	30	**1025V18 00 12**
23	15	40	**1025V23 00 15**
26	19	60	**1025V26 00 19**

3000 Tube Cutter



Order code
3000 71 00

3000 71 11 Tube Cutter



Order code
3000 71 11

Clip Strips for Tubes



ØD	Order code
4	**CLIP 04 00**
6	**CLIP 06 00**
8	**CLIP 08 00**
10	**CLIP 10 00**
12	**CLIP 12 00**
14	**CLIP 14 00**

Parker Hannifin Corporation
Fluid Connectors Group

Tel: +45 63 12 83 00 | Email: ps@hymatik.com | www.hymatik.com | Hvidkaervej 27a, DK-5250 Odense SV, Denmark

Safety Couplers & Probes
Passage 5,5mm - ISO B6 profile

-20°C to +60°C
16 bar max.
ISO 4414

9405U Male Body, BSPP



C	Order code
R1/4	**9405U06 13**
R3/8	**9405U06 17**
R1/2	**9405U06 21**

9087U Male Thread, BSPP



C	Order code
G1/4	**9087U06 13**
G1/8	**9087U06 17**
G1/2	**9087U06 21**

9414U Female Body, BSPP



C	Order code
G1/4	**9414U06 13**
G3/8	**9414U06 17**
G1/2	**9414U06 21**

9086 Female Thread, BSPP



C	Order code
G1/4	**9086 22 13**
G3/8	**9086 23 17**
G1/2	**9086 23 21**

9421U with Hosetail



ØD	Order code
6	**9421U06 06**
8	**9421U06 08**
10	**9421U06 10**

9094U with Hosetail



ØD	Order code
6	**9094U06 06**
8	**9094U06 08**
10	**9094U06 10**

9416U Female Body, Panel Mountable, BSPP



C	Order code
G1/4	**9416U06 13**

9080U with LF3000 Outlet & Protection Spring



ØD	Order code
8	**9080U06 08**
10	**9080U06 10**

9410U with LF3000 Outlet & Protection Spring



ØD	Order code
8	**9410U06 08**
10	**9410U06 10**

9440U Female Y Body, BSPP



C	Order code
G3/8	**9440U06 17**

Tel: +45 63 12 83 00 | Email: ps@hymatik.com | www.hymatik.com | Hvidkaervej 27a, DK-5250 Odense SV, Denmark

Safety Couplers & Probes
Passage 8mm - ISO B8 profile

-20°C to +60°C
16 bar max.
ISO 4414

9405U Male Body, BSPT



C	Order code
R1/4	**9405U08 13**
R3/8	**9405U08 17**
R1/2	**9405U08 21**

9414U Female Body, BSPP



C	Order code
G1/4	**9414U08 13**
G3/8	**9414U08 17**
G1/2	**9414U08 21**

9421U with Hosetail



ØD	Order code
8	**9421U08 08**
10	**9421U08 10**
13	**9421U08 13**

9416U Female Body, Panel Mountable, BSPP



C	Order code
G3/8	**9416U08 17**

9410U with LF3000 Outlet & Protection Spring



ØD	Order code
10	**9410U08 10**
12	**9410U08 12**

9440U Female Y Body, BSPP



C	Order code
G1/2	**9440U08 21**

9087U Male Thread, BSPP



C	Order code
G1/4	**9087U08 13**
G3/8	**9087U08 17**
G1/2	**9087U08 21**

9086 Female Thread, BSPP



C	Order code
G1/4	**9086 30 13**
G3/8	**9086 30 17**
G1/2	**9086 30 21**

9094U with Hosetail



ØD	Order code
8	**9094U08 08**
10	**9094U08 10**
13	**9094U08 13**

9080U with LF3000 Outlet & Protection Spring



ØD	Order code
10	**9080U08 10**
12	**9080U08 12**

Parker Hannifin Corporation
Fluid Connectors Group

Tel: +45 63 12 83 00 | Email: ps@hymatik.com | www.hymatik.com | Hvidkaervej 27a, DK-5250 Odense SV, Denmark

Safety Couplers & Probes
Passage 7,2mm - EURO Interchange

-20°C to +60°C
16 bar max.
ISO 4414

9401E Male Body, BSPP



C	Order code
G1/4	**9401E07 13**
G3/8	**9401E07 17**
G1/2	**9401E07 21**

9087E Male Thread, BSPP



C	Order code
G1/4	**9087E07 13**
G3/8	**9087E07 17**
G1/2	**9087E07 21**

9414E Female Body, BSPP



C	Order code
G1/4	**9414E07 13**
G3/8	**9414E07 17**
G1/2	**9414E07 21**

9086 Female Thread, BSPP



C	Order code
G1/4	**9086 25 13**
G3/8	**9086 25 17**
G1/2	**9086 25 21**

9421E with Hosetail



ØD	Order code
8	**9421E07 08**
10	**9421E07 10**
13	**9421E07 13**

9094E with Hosetail



ØD	Order code
8	**9094E07 08**
10	**9094E07 10**
13	**9094E07 13**

9416E Female Body, Panel Mountable, BSPP



C	Order code
G3/8	**9416E07 17**

9080E with LF3000 Outlet & Protection Spring



ØD	Order code
10	**9080E07 10**
12	**9080E07 12**

9410E with LF3000 Outlet & Protection Spring



ØD	Order code
10	**9410E07 10**
12	**9410E07 12**

9440E Female Y Body, BSPP



C	Order code
G1/2	**9440E07 21**

Tel: +45 63 12 83 00 | Email: ps@hymatik.com | www.hymatik.com | Hvidkaervej 27a, DK-5250 Odense SV, Denmark

Safety Couplers & Probes
Passage 5,5mm - ARO Interchange

-20°C to +60°C
16 bar max.
ISO 4414

9401A Male Body, BSPP



C	Order code
G1/4	**9401A06 13**
G3/8	**9401A06 17**
G1/2	**9401A06 21**

9087A Male Thread, BSPP



C	Order code
G1/4	**9087A06 13**
G3/8	**9087A06 17**
G1/2	**9087A06 21**

9414A Female Body, BSPP



C	Order code
G1/4	**9414A06 13**
G3/8	**9414A06 17**
G1/2	**9414A06 21**

9086 Female Thread, BSPP



C	Order code
G1/4	**9086 22 13**
G3/8	**9086 22 17**
G1/2	**9086 22 21**

9421A with Hosetail



ØD	Order code
6	**9421A06 06**
8	**9421A06 08**
10	**9421A06 10**

9094A with Hosetail



ØD	Order code
6	**9094A06 06**
8	**9094A06 08**
10	**9094A06 10**

9416A Female Body, Panel Mountable, BSPP



C	Order code
G1/4	**9416A 06 13**

9080A with LF3000 Outlet & Protection Spring



ØD	Order code
8	**9080A06 08**
10	**9080A06 10**

9410A with LF3000 Outlet & Protection Spring



ØD	Order code
8	**9410A06 08**
10	**9410A06 10**

9440A Female Y Body, BSPP



C	Order code
G3/8	**9440A06 17**

Parker Hannifin Corporation
Fluid Connectors Group

Tel: +45 63 12 83 00 | Email: ps@hymatik.com | www.hymatik.com | Hvidkaervej 27a, DK-5250 Odense SV, Denmark

Blowguns & Nozzles

-15°C to +50°C
10 bar max.
OSHA & CE

0653 Flow Reducer «Energy Saving» Blowgun, lower connection



C	Order code
G1/4	**0653 66 13**

0659 Standard Blowgun, with angled nozzle, BSPP



C	Order code
G1/4	**0659 00 13**

0656 Progressive Control, lower connection, BSPP



C	Order code
G1/4	**0656 66 13**

0652 Progressive Control, lower connection, BSPP



C	Order code
G1/4	**0652 66 13**

0654 Safety Blowgun, with angled nozzle, BSPP



C	Order code
G1/4	**0654 00 13**

0657 Progressive Control, upper connection, BSPP



C	Order code
G1/4	**0657 66 13**

0655 Progressive Control, upper connection, BSPP



C	Order code
G1/4	**0655 66 13**

0690 Standard Nozzle



ØD	C	Order code
2.5	M12 x 1,25	**0690 01 00**

0690 Long Straight Tube Nozzle



ØD	C	Order code
2.5	M12 x 1,25	**0690 03 00**

0690 Air Screen Nozzle



ØD	C	Order code
2	M12 x 1,25	**0690 09 00**

0623 Lever Operated Air Gun with Removable Nozzle



ØD	C	Order code
2	G1/4	**0623 10 35**

0690 Long-Angled Tube Nozzle



ØD	C	Order code
2.5	M12 x 1,25	**0690 05 00**

0690 Coenda Effect Nozzle



	C	Order code
	M12 x 1,25	**0690 08 00**

0690 Booster Nozzle



ØD	C	Order code
2.5	M12 x 1,25	**0690 10 00**

Blowgun Kits

Includes:
- A blowgun
- Recoil tubing (4 m long), external Ø 8 mm
- G1/4" male thread connector adapted to coupler

Kits are packaged in individual plastic bags.



0631 00 01
Safety Blowgun Kit, lower connection

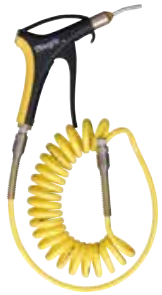

C	Order code
G1/4	**0631 00 01**

0631 00 07
Interchangeable Nozzle Blowgun Kit, lower connection



C	Order code
G1/4	**0631 00 07**

0631 00 23
Flow Reducer «Energy Saving» Blowgun Kit, lower connection



C	Order code
G1/4	**0631 00 23**

0631 00 05
Angled Nozzle Blowgun Kit, lower connection



C	Order code
G1/4	**0631 00 05**

0631 00 03
Short Nozzle Blowgun Kit, lower connection



C	Order code
G1/4	**0631 00 03**

0631 00 09
Standard Blowgun Kit, lower connection



C	Order code
G1/4	**0631 00 09**

Tel: +45 63 12 83 00 | Email: ps@hymatik.com | www.hymatik.com | Hvidkaervej 27a, DK-5250 Odense SV, Denmark

Pneumatic Ball Valves & Action Valves

7913 Mini Ball Valves, 3/2 version, with vent, with push-in connection



ØD	Order code
4	**7913 04 00**
6	**7913 06 00**
8	**7913 08 00**
10	**7913 10 00**
12	**7913 12 00**

7914 Mini Ball Valves 3/2 version, with vent, with BSPP thread & push-in connection



ØD	C	Order code
6	G1/8	**7914 06 10**
8	G1/4	**7914 08 13**
10	G3/8	**7914 10 17**
12	G1/2	**7914 12 21**

7910 Mini Ball Valves, 2/2 version, with push-in connection



ØD	Order code
4	**7910 04 00**
6	**7910 06 00**
8	**7910 08 00**
10	**7910 10 00**
12	**7910 12 00**

7911 Mini Ball Valves, 2/2 Version with BSPP thread & push-in connection



ØD	C	Order code
6	G1/8	**7911 06 10**
8	G1/4	**7911 08 13**
10	G3/8	**7911 10 17**
12	G1/2	**7911 12 21**

0492 Double Female



-20° to +80°C
12 bar

C	DN	Order code
G1/4	4	**0492 04 13**
G1/4	4	**0492 04 13 64**
G3/8	7	**0492 07 17**
G1/2	10	**0492 10 21**
G3/4	13	**0492 13 27**

0491 Male & Female, BSPP



-20° to +80°C
12 bar

C	DN	Order code
G1/4	4	**0491 04 13**
G1/4	4	**0491 04 13 64**
G3/8	7	**0491 07 17**
G1/2	10	**0491 10 21**
G3/4	13	**0491 13 27**

0402 Standard In-Line Ball Valve - Double Female, BSPP



-20° to +80°C
40 bar

C	DN	Order code
G1/8	4	**0402 04 10**
G1/8	7	**0402 07 10**
G1/4	7	**0402 07 13**
G3/4	10	**0402 10 17**
G1/2	13	**0402 13 21**
G3/4	20	**0402 20 27**
G1"	23	**0402 23 34**

0401 Standard In-Line Ball Valve, Male Female BSPP



-20° to +80°C
40 bar

ØD	C	Order code
4	G1/8	**0401 04 10**
7	G1/4	**0401 07 13**
10	G3/8	**0401 10 17**
13	G1/2	**0401 13 21**
18	G3/4	**0401 18 27**
23	G1"	**0401 23 34**

4902 In-Line Ball Valves, Fluoropolymer Series, BSPP



-20° to +130°C
30 bar

C	DN	PN	Order code
G1/4	10	30	**4902 10 13**
G3/8	10	30	**4902 10 17**
G1/2	15	30	**4902 15 21**
G3/4	20	30	**4902 20 27**
G2.1/2	25	30	**4902 25 34**
G2.1/2	32	30	**4902 32 42**
G2.1/2	40	30	**4902 40 49**
G2.1/2	50	30	**4902 50 48**
G2.1/2	65	30	**4902 65 47**
G3"	80	30	**4902 80 46**
G4"	100	30	**4902 01 45**

Pneumatic Ball Valves & Action Valves

0439 Lockable Ball Valves, Double Female with vent, BSPP



-20° to +80°C
40 bar

ØD	C	Order code
4	G1/8	**0439 04 10**
7	G1/4	**0439 07 13**
10	G3/8	**0439 10 17**
13	G1/2	**0439 13 21**
18	G3/4	**0439 18 27**
23	G1"	**0439 23 34**

0448 Panel Moutable Female, BSPP, right angle porting



-20° to +80°C
40 bar

ØD	C	Order code
4	G1/8	**0448 04 10**
6	G1/4	**0448 06 13**
9	G3/8	**0448 09 17**
12	G1/2	**0448 12 21**

0438 Female, 3 port 2 way Lockable Ball Valve, BSPP



-20° to +80°C
40 bar

ØD	C	Order code
9	G3/8	**0438 09 17**
12	G1/2	**0438 12 21**
18	G3/4	**0438 18 27**
23	G1"	**0438 23 34**

0489 In-Line Vented Ball Valves, BSPP, with threaded exhaust



-20° to +80°C
40 bar

ØD	C	Order code
7	G1/4	**0489 07 13**
10	G3/8	**0489 10 17**
13	G1/2	**0489 13 21**
18	G3/4	**0489 18 27**
23	G1"	**0489 23 34**

0449 In-Line Vented Ball Valves, BSPP, panel mountable



-20° to +80°C
40 bar

ØD	C	Order code
7	G1/4	**0449 07 13**
10	G3/8	**0449 10 17**
13	G1/2	**0449 13 21**

0469 Double Female Vented Ball Valves BSPP



-20° to +80°C
40 bar

ØD	C	Order code
4	G1/8	**0469 04 10**
7	G1/4	**0469 07 13**
10	G3/8	**0469 10 17**
13	G1/2	**0469 13 21**
18	G3/4	**0469 18 27**
23	G1"	**0469 23 34**

4810 Ball Valve, Double Female BSPP



C	DN	PN	Order code
G1/4	8	64	**4810 08 13**
G3/8	10	64	**4810 10 17**
G1/2	15	64	**4810 15 21**
G3/4	20	40	**4810 20 27**
G1"	25	40	**4810 25 34**

The Ball Valves, Universal Series, can be adapted to various applications in semi-standard versions.

Parker Hannifin Corporation
Fluid Connectors Group

Tel: +45 63 12 83 00 | Email: ps@hymatik.com | www.hymatik.com | Hvidkaervej 27a, DK-5250 Odense SV, Denmark

Axial Valves

4202 Axial Valve, normally closed, double female, BSPP, FKM Seal



-20° to +135°C
10 bar

C	DN	Order code
G3/8	10	**4202 10 17 20**
G1/2	15	**4202 15 21 20**
G3/4	20	**4202 20 27 20**
G1"	25	**4202 25 34 20**
G1"1/4	32	**4202 32 42 20**
G1"1/2	40	**4202 40 49 20**
G2"	50	**4202 50 48 20**

4212 Axial Valve, normally open, double female, BSPP, FKM Seal



-20° to +135°C
8 bar

C	DN	Order code
G3/8	10	**4212 10 17 20**
G1/2	15	**4212 15 21 20**
G3/4	20	**4212 20 27 20**
G1"	25	**4212 25 34 20**
G1"1/4	32	**4212 32 42 20**
G1"1/2	40	**4212 40 49 20**
G2"	50	**4212 50 48 20**

4222 Axial Valve, double acting, double female, BSPP, FKM Seal



-20° to +135°C
10 bar

ØD	C	Order code
10	G3/8	**4222 10 17 20**
15	G1/2	**4222 15 21 20**
20	G3/4	**4222 20 27 20**
25	G1"	**4222 25 34 20**
32	G1.1/4"	**4222 32 42 20**
40	G1.1/2"	**4222 40 49 20**
50	G2"	**4222 50 48 20**

4298 Mini-Solenoid Valve, 1W/ 1,2VA



Voltage		Order code
24V	⎓	**4298 01 01**
24V	∿	**4298 01 02**
110V	∿	**4298 02 01**
220V	∿	**4298 02 02**

4298 Namur Sub-Base for Solenoid Pilot Valve



C	Order code
M5 x 0.8	**4298 00 01**

0669 Sleeve Valve, Double Female, BSPP & M5



C	DN	Order code
M5 x 0.8	2	**0669 02 19**
G1/8	4	**0669 04 10**
G1/4	7	**0669 07 13**
G3/8	10	**0669 10 17**
G1/2	14	**0669 14 21**
G3/4	19	**0669 19 27**

Parker Hannifin Corporation
Fluid Connectors Group

Tel: +45 63 12 83 00 | Email: ps@hymatik.com | www.hymatik.com | Hvidkaervej 27a, DK-5250 Odense SV, Denmark

Rectus Series 21KA - DN 5.0

Mini industrial coupling, the world's most commonly used profile. Above average flow performance for liquid and gaseous media. Large band width in materials and valve variants.

Chart / Air

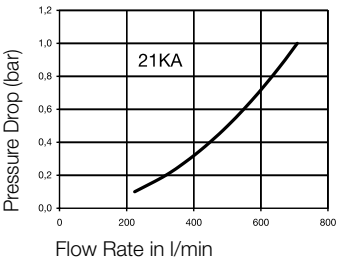

Advantages

- Single handed operation
- Small dimensions
- All versions interchangeable



Working Pressure
PB = 35 bar, maximum static working pressure with safety factor of 4 to1.

Working Temperature*
-20°C up to +100°C (NBR)
depending on the medium.
*At a temperature below -20°C and above +100°C special seals are available on request.

Material

Coupling

Back Body	Brass
Valve Body	Brass
Sleeve	Brass
Valve	Brass
Spring and Locking Ring	AISI 301
Locking Balls	AISI 420
Seals	NBR
Plug	Brass

Coupling - Male Thread BSPP

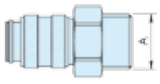

Thread A	Order code	Box Qty
1/8"	**21KAAW10MPX**	20
1/4"	**21KAAW13MPX**	20

Plug - Male Thread BSPP

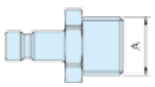

Thread A	Order code	Box Qty
1/8"	**21SFAW10MXX**	20
1/4"	**21SFAW13MXX**	20

Coupling - Female Thread BSPP

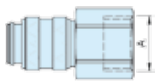

Thread A	Order code	Box Qty
1/8"	**21KAIW10MPX**	20
1/4"	**21KAIW13MPX**	20

Plug - Female Thread BSPP

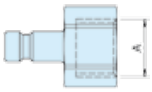

Thread A	Order code	Box Qty
1/8"	**21SFIW10MXX**	20

Coupling - Hose Barb

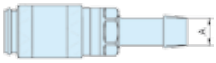

Thread A	Order code	Box Qty
6 mm	**21KATF06MPX**	20
8 mm	**21KATF08MPX**	20

Plug - Hose Barb

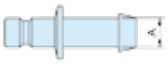

Thread A	Order code	Box Qty
6 mm	**21SFTF06MXX**	20
8 mm	**21SFTF08MXX**	20

Plug - Plastic Hose Connection



Thread A	Order code	Box Qty
4x6 mm	**21SFKO06MXX**	20
6x8 mm	**21SFKO08MXX**	20

Parker Hannifin Corporation
Pneumatic Division - Europe

Tel: +45 63 12 83 00 | Email: ps@hymatik.com | www.hymatik.com | Hvidkaervej 27a, DK-5250 Odense SV, Denmark

Rectus Series 17KA - DN 5.0

English profile industrial coupling. Specially suited to compressed air applications. Brass/steel design developed for industry. Schrader (DN 5.0) Interchange.

Advantages

- Single handed operation
- Small dimensions, light weight
- UltraFlo technology with high flow valve

Chart / Air

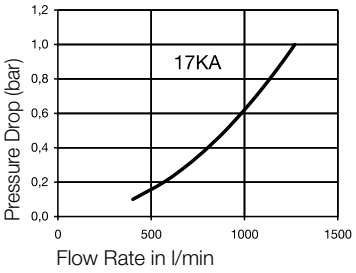



Working Pressure
PB = 35 bar, maximum static working pressure with safety factor of 4 to1.

Working Temperature*
-20°C up to +100°C (NBR)
depending on the medium.
*At a temperature below -20°C and above +100°C special seals are available on request.

Material

Coupling

Back Body	Brass, Nickel Plated
Valve Body	Steel Hardened, Zinc Pl.
Sleeve	Steel Hardened, Nickel Pl.
Valve	Brass
Inner Sleeve	Brass
Spring Plate	Brass
Spring and Locking Ring	AISI 303
Locking Balls	AISI 420
Seals	NBR
Plug	Steel Hardened, Nickel Pl.

Coupling - Male Thread BSPT

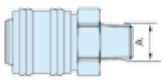

Thread A	Order code	Box Qty
1/4"	**17KAAK13SPN**	10
3/8"	**17KAAK17SPN**	10
1/2"	**17KAAK21SPN**	10

Plug - Male Thread BSPT

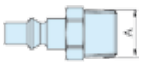

Thread A	Order code	Box Qty
1/8"	**17SFAK10SXN**	20
1/4"	**17SFAK13SXN**	20

Coupling - Female Thread BSPP

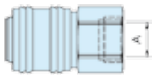

Thread A	Order code	Box Qty
1/4"	**17KAIW13SPN**	10
1/2"	**17KAIW21SPN**	10

Plug - Female Thread BSPP

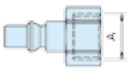

Thread A	Order code	Box Qty
1/8"	**17SFIW10SXN**	20
1/4"	**17SFIW13SXN**	20

Coupling - Hose Barb

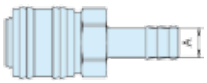

Thread A	Order code	Box Qty
8 mm	**17KATF08SPN**	10
10 mm	**17KATF10SPN**	10

Plug - Hose Barb

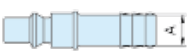

Thread A	Order code	Box Qty
8 mm	**17SFTF08SXN**	20
10 mm	**17SFTF10SXN**	20

Parker Hannifin Corporation
Pneumatic Division - Europe

Tel: +45 63 12 83 00 | Email: ps@hymatik.com | www.hymatik.com | Hvidkaervej 27a, DK-5250 Odense SV, Denmark

Rectus Series 18KA - DN 5.5

ISO 6150 C industrial coupling with UltraFlo technology. Robust design. The steel sleeve counters oscillating forces. System has limited use for liquids (steel sleeve/ zinc die cast valve).

Chart / Air

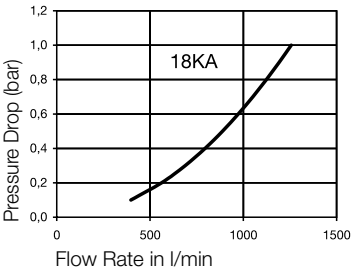

Advantages

- Single handed operation
- Plug design optimised through greater insert depth
- Innovative valve technology with high flow valve



Working Pressure
PB = 35 bar, maximum static working pressure with safety factor of 4 to1.

Working Temperature*
-20°C up to +100°C (NBR)
depending on the medium.
*At a temperature below -20°C and above +100°C special seals are available on request.

Material

Coupling

Back Body	Brass, Nickel Plated
Valve Body	Brass, Nickel Plated
Sleeve	Steel Hardened, Nickel Pl.
Valve	Zinc Diecasting, Nickel Pl.
Inner Sleeve	Brass
Spring Plate	Brass
Spring / Locking Ring	AISI 301
Locking Balls	AISI 420
Seals	NBR
Plug	Steel Hardened, Nickel Pl.

Coupling - Male Thread BSPT

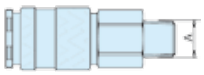

Thread A	Order code	Box Qty
1/4"	**18KAAK13MPN**	5
3/8"	**18KAAK17MPN**	5

Plug - Male Thread BSPT

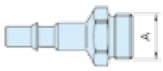

Thread A	Order code	Box Qty
1/4"	**18SFAK13SXN**	20
3/8"	**18SFAK17SXN**	5

Coupling - Female Thread BSPP

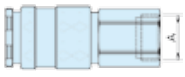

Thread A	Order code	Box Qty
1/4"	**18KAIW13MPN**	5
3/8"	**18KAIW17MPN**	5
1/2"	**18KAIW21MPN**	5

Plug - Female Thread BSPP

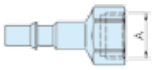

Thread A	Order code	Box Qty
1/4"	**18SFIW13SXN**	20
3/8"	**18SFIW17SXN**	20

Coupling - Hose Barb

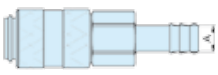

Thread A	Order code	Box Qty
8 mm	**18KATF08MPN**	5
10 mm	**18KATF10MPN**	5

Plug - Hose Barb



Thread A	Order code	Box Qty
6 mm	**18SFTF06SXN**	20
8 mm	**18SFTF08SXN**	20
10 mm	**18SFTF10SXN**	20

Tel: +45 63 12 83 00 | Email: ps@hymatik.com | www.hymatik.com | Hvidkaervej 27a, DK-5250 Odense SV, Denmark

Rectus Series 19KA - DN 5.5

English industrial profile with UltraFlo technology. Compact dimensions. Robust coupling for compressed air applications. The steel sleeve counters oscillating forces.

Chart / Air

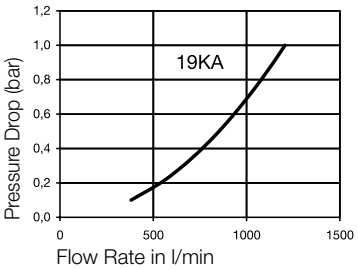

Advantages

- Single handed operation
- Plug design optimised through greater insert depth
- UltraFlo technology with high flow valve



Working Pressure
PB = 35 bar, maximum static working pressure with safety factor of 4 to1.

Working Temperature*
-20°C up to +100°C (NBR)
depending on the medium.
*At a temperature below -20°C and above +100°C special seals are available on request.

Material

Coupling	
Back Body	Brass, Nickel Plated
Valve Body	Brass, Nickel Plated
Sleeve	Steel Hardened, Nickel Pl.
Valve	Zinc Diecasting, Nickel Pl.
Inner Sleeve	Brass
Spring Plate	Brass
Spring / Locking Ring	AISI 301
Locking Balls	AISI 420
Seals	NBR
Plug	Steel Hardened, Nickel Pl.

Coupling - Male Thread BSPT

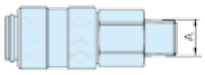

Thread A	Order code	Box Qty
1/4"	**19KAAK13MPN**	10
3/8"	**19KAAK17MPN**	10
1/2"	**19KAAK21MPN**	10

Plug - Male Thread BSPT



Thread A	Order code	Box Qty
1/4"	**19SFAK13SXN**	20
3/8"	**19SFAK17SXN**	20

Coupling - Female Thread BSPP

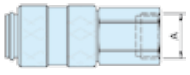

Thread A	Order code	Box Qty
1/4"	**19KAIW13MPN**	10
1/2"	**19KAIW21MPN**	10

Plug - Female Thread BSPP

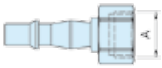

Thread A	Order code	Box Qty
1/4"	**19SFIW13SXN**	20
3/8"	**19SFIW17SXN**	20

Coupling - Hose Barb

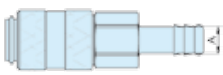

Thread A	Order code	Box Qty
8 mm	**19KATF08MPN**	10
10 mm	**19KATF10MPN**	10

Plug - Hose Barb



Thread A	Order code	Box Qty
6 mm	**19SFTF06SXN**	20
8 mm	**19SFTF08SXN**	20
10 mm	**19SFTF10SXN**	20

Rectus Series 14KA - DN 5.5

Robust brass coupling. Numerous connection options. Preferred application: compressed air technology and water connections. ARO 210 Interchangeable.

Chart / Air

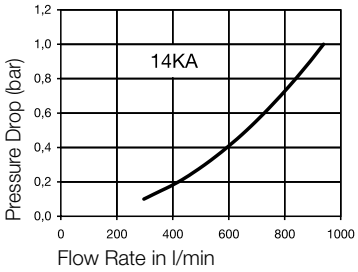

Advantages

- Single handed operation
- Optimised plug design through greater insert depth



Working Pressure
PB = 35 bar, maximum static working pressure with safety factor of 4 to1.

Working Temperature*
-20°C up to +100°C (NBR)
depending on the medium.
*At a temperature below -20°C and above +100°C special seals are available on request.

Material

Coupling

Back Body	Brass
Valve Body	Brass
Sleeve	Brass
Valve	Brass
Spring and Locking Ring	AISI 301
Pins	AISI 420
Seals	NBR
Plug	Steel Hardened, Nickel Plated

Coupling - Male Thread BSPP

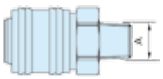

Thread A	Order code	Box Qty
1/4"	**14KAAW13MPX**	20
3/8"	**14KAAW17MPX**	20
1/2"	**14KAAW21MPX**	20

Plug - Male Thread BSPT

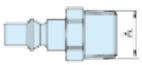

Thread A	Order code	Box Qty
1/4"	**22SFAK13SXN**	20
3/8"	**22SFAK17SXN**	20
1/2"	**22SFAK21SXN**	10

Coupling - Female Thread BSPP

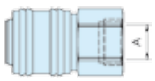

Thread A	Order code	Box Qty
1/4"	**14KAIW13MPX**	20
1/2"	**14KAIW21MPX**	20

Plug - Female Thread BSPP

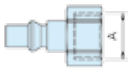

Thread A	Order code	Box Qty
1/4"	**22SFIW13SXN**	20
3/8"	**22SFIW17SXN**	20

Coupling - Hose Barb

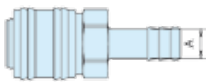

Thread A	Order code	Box Qty
8 mm	**14KATF08MPX**	20
10 mm	**14KATF10MPX**	20

Plug - Hose Barb



Thread A	Order code	Box Qty
6 mm	**22SFTF06SXN**	20
8 mm	**22SFTF08SXN**	20
10 mm	**22SFTF10SXN**	20

Tel: +45 63 12 83 00 | Email: ps@hymatik.com | www.hymatik.com | Hvidkaervej 27a, DK-5250 Odense SV, Denmark

Rectus Series 1423KA - DN 5.5

Rectus Tema premium 1/4" industrial coupling - the know-how from both brands combined in one system. Conforming to ISO 6150 B. High grade valve technology for optimum flow performance. Especially robust 2-component plastic sleeve.

Chart / Air

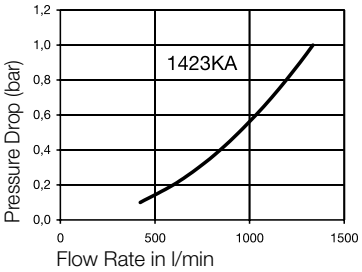

Advantages

- Single handed operation
- High flow valve
- Minimum coupling forces



Working Pressure
PB = 35 bar, maximum static working pressure with safety factor of 4 to1.

Working Temperature*
-20°C up to +40°C (NBR)
depending on the medium.
*At a temperature below -20°C and above +40°C special seals are available on request.

Material

Coupling

Back Body	Brass, Nickel Plated
Valve Body	Steel, QPQ treated
Sleeve	PA6 + TPE
Valve	Brass
Spring	AISI 301
Locking Ring and Locking Balls	AISI 420
Seals	NBR
Plug	Steel Hardened, Nickel Plated

Coupling - Male Thread BSPT

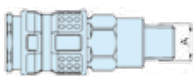

Thread A	Order code	Box Qty
3/8"	**1423KAAK17SPN**	10
1/2"	**1423KAAK21SPN**	10

Plug - Male Thread BSPT

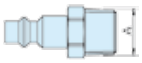

Thread A	Order code	Box Qty
1/4"	**23SFAK13SXN**	20
3/8"	**23SFAK17SXN**	20

Coupling - Female Thread BSPP

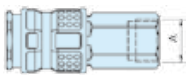

Thread A	Order code	Box Qty
1/2"	**1423KAIW21SPN**	10

Plug - Female Thread BSPP

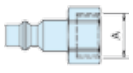

Thread A	Order code	Box Qty
1/4"	**23SFIW13SXN**	20
3/8"	**23SFIW17SXN**	20

Coupling - Hose Barb

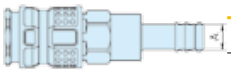

Thread A	Order code	Box Qty
9 mm	**1423KATF09SPN**	10
13 mm	**1423KATF13SPN**	10

Plug - Hose Barb

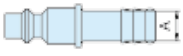

Thread A	Order code	Box Qty
6 mm	**23SFTF06SXN**	20
8 mm	**23SFTF08SXN**	20
10 mm	**23SFTF10SXN**	20

Parker Hannifin Corporation
Pneumatic Division - Europe

Tel: +45 63 12 83 00 | Email: ps@hymatik.com | www.hymatik.com | Hvidkaervej 27a, DK-5250 Odense SV, Denmark

Rectus Series 24KA - DN 5.5

1/4" Industrial brass coupling conforming to ISO 6150B and US Mil. Spec 4109. Notable for brass mass design and corresponding sleeve design. Hardened steel plug counters vibrations and effects of external forces.

Chart / Air

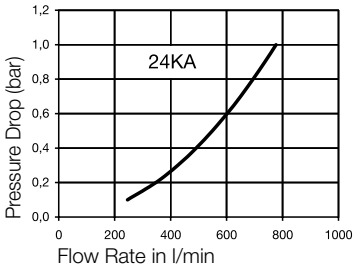

Advantages

- Single handed operation



Working Pressure
PB = 35 bar, maximum static working pressure with safety factor of 4 to1.

Working Temperature*
-20°C up to +100°C (NBR)
depending on the medium.
*At a temperature below -20°C and above +100°C special seals are available on request.

Material

Coupling

Back Body	Brass
Valve Body	Brass
Sleeve	Brass
Valve	Brass
Spring and Locking Ring	AISI 301
Pins	AISI 420
Seals	NBR
Plug	Steel Hardened, Nickel Plated

Coupling - Male Thread BSPP

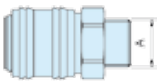

Thread A	Order code	Box Qty
1/4"	**24KAAW13MPX**	20
3/8"	**24KAAW17MPX**	20
1/2"	**24KAAW21MPX**	20

Plug - Male Thread BSPT

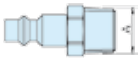

Thread A	Order code	Box Qty
1/4"	**23SFAK13SXN**	20
3/8"	**23SFAK17SXN**	20

Coupling - Female Thread BSPP

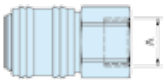

Thread A	Order code	Box Qty
1/4"	**24KAIW13MPX**	20
3/8"	**24KAIW17MPX**	20
1/2"	**24KAIW21MPX**	20

Plug - Female Thread BSPP

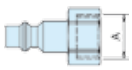

Thread A	Order code	Box Qty
1/4"	**23SFIW13SXN**	20
3/8"	**23SFIW17SXN**	20

Coupling - Hose Barb

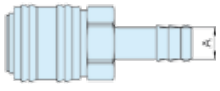

Thread A	Order code	Box Qty
8 mm	**24KATF08MPX**	20
10 mm	**24KATF10MPX**	20

Plug - Hose Barb

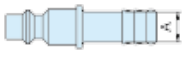

Thread A	Order code	Box Qty
6 mm	**23SFTF06SXN**	20
8 mm	**23SFTF08SXN**	20
10 mm	**23SFTF10SXN**	20

Parker Hannifin Corporation
Pneumatic Division - Europe

Tel: +45 63 12 83 00 | Email: ps@hymatik.com | www.hymatik.com | Hvidkaervej 27a, DK-5250 Odense SV, Denmark

Rectus Series 126KA - DN 7.2

Universal brass coupling with European standard industrial profile. Coupling system with single-handed operation and standard-valve. Series 26 plugs in brass. Series 25 steel plugs recommended for oscillating forces.

Chart / Air

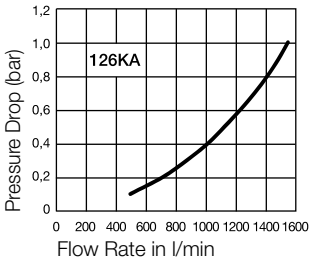

Advantages

- Compact outer dimension
- High working pressure
- Optimized flow rate



Working Pressure
PB = 40 bar, maximum static working pressure with safety factor of 4 to1.

Working Temperature*
-20°C up to +100°C (NBR)
depending on the medium.
*At a temperature below -20°C and above +100°C special seals are available on request.

Material

Coupling	
Back Body	Brass
Valve Body	Brass
Sleeve	Brass
Valve	Brass
Spring and Locking Ring	AISI 303
Locking Balls	AISI 420
Seals	NBR
Plug	Brass

Coupling - Male Thread BSPT

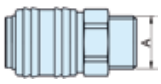

Thread A	Order code	Box Qty
1/4"	**126KAAW13MPX**	20
3/8"	**126KAAW17MPX**	20
1/2"	**126KAAW21MPX**	20

Plug - Male Thread BSPP

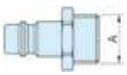

Thread A	Order code	Box Qty
1/4"	**26SFAW13MXX**	20
3/8"	**26SFAW17MXX**	20
1/2"	**26SFAW21MXX**	20

Coupling - Female Thread BSPP

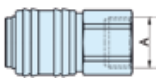

Thread A	Order code	Box Qty
1/4"	**126KAIW13MPX**	20
3/8"	**126KAIW17MPX**	20
1/2"	**126KAIW21MPX**	20

Plug - Female Thread BSPP



Thread A	Order code	Box Qty
1/4"	**26SFIW13MXX**	20
3/8"	**26SFIW17MXX**	20
1/2"	**26SFIW21MXX**	20

Coupling - Hose Barb

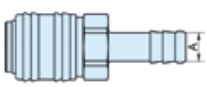

Thread A	Order code	Box Qty
6 mm	**126KATF06MPX**	20
8 mm	**126KATF08MPX**	20
9 mm	**126KATF09MPX**	20
10 mm	**126KATF10MPX**	20
13 mm	**126KATF13MPX**	20

Plug - Hose Barb



Thread A	Order code	Box Qty
6 mm	**26FTF06MXX**	20
8 mm	**26FTF08MXX**	20
9 mm	**26FTF09MXX**	20
10 mm	**26FTF10MXX**	20
13 mm	**26FTF13MXX**	20

Parker Hannifin Corporation
Pneumatic Division - Europe

Tel: +45 63 12 83 00 | Email: ps@hymatik.com | www.hymatik.com | Hvidkaervej 27a, DK-5250 Odense SV, Denmark

Rectus Series 1625KA - DN 7.8

Rectus Tema premium European standard industrial coupling – the know-how from both brands combined in one system. Extremely robust 2-component plastic sleeve. Suitable for compressed air applications with above average air consumption.

Chart / Air

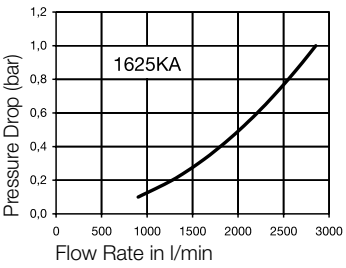

Advantages

- Single handed operation
- High grade valve technology with optimum flow performance
- Minimum coupling forces



Working Pressure

PB = 35 bar, maximum static working pressure with safety factor of 4 to1.

Working Temperature*

-20°C up to +40°C (NBR)
depending on the medium.
*At a temperature below -20°C and above +40°C special seals are available on request.

Material

Coupling

Back Body	Brass, Nickel Plated
Valve Body	Steel, QPQ treated
Sleeve	PA6 + TPE
Valve	Brass
Spring and Locking Ring	AISI 301
Locking Balls	AISI 420
Seals	NBR
Plug	Steel Hardened, Zinc Plated

Coupling - Male Thread BSPT

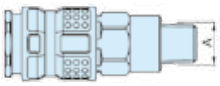

Thread A	Order code	Box Qty
3/8"	**1625KAAK17SPN**	10
1/2"	**1625KAAK21SPN**	10

Plug - Male Thread BSPT



Thread A	Order code	Box Qty
1/4"	**25SFAK13SXZ**	20
3/8"	**25SFAK17SXZ**	20
1/2"	**25SFAK21SXZ**	10

Coupling - Female Thread BSPP

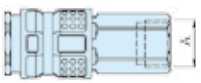

Thread A	Order code	Box Qty
1/2"	**1625KAIW21SPN**	10

Plug - Female Thread BSPP

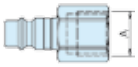

Thread A	Order code	Box Qty
1/4"	**25SFIW13SXZ**	20
3/8"	**25SFIW17SXZ**	20

Coupling - Hose Barb

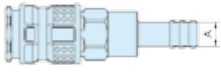

Thread A	Order code	Box Qty
9 mm	**1625KATF09SPN**	10
13 mm	**1625KATF13SPN**	10

Plug - Hose Barb



Thread A	Order code	Box Qty
9 mm	**25SFTF09SXZ**	20
13 mm	**25SFTF13SXZ**	20

Rectus Series 27KA - DN 10

1/2" European industrial profile with UltraFlo technology. High flow performance. Notable for robust design with steel sleeve in use with large pneumatic consumers. Also available in brass.

Chart / Air

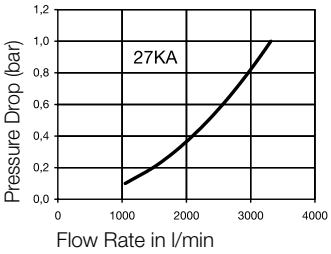

Advantages

- Single handed operation
- High flow valve - low pressure drop
- No damage to the valve body from binding design



Working Pressure
PB = 35 bar, maximum static working pressure with safety factor of 4 to1.

Working Temperature*
-20°C up to +100°C (NBR)
depending on the medium.
*At a temperature below -20°C and above +100°C special seals are available on request.

Material

Coupling

Back Body	Brass, Nickel Plated
Valve Body	Brass, Nickel Plated
Sleeve	Steel Hardened, Nickel Pl.
Valve	Brass
Inner Sleeve	Brass
Spring Plate	Brass
Spring and Locking Ring	AISI 301
Locking Balls	AISI 420
Seals	NBR
Plug	Steel Hardened, Nickel Pl.

Coupling - Male Thread BSPT



Thread A	Order code	Box Qty
3/8"	**27KAAK17MPN**	2
1/2"	**27KAAK21MPN**	2

Plug - Male Thread BSPT



Thread A	Order code	Box Qty
1/4"	**27SFAK13SXN**	10
3/8"	**27SFAK17SXN**	10
1/2"	**27SFAK21SXN**	10

Coupling - Female Thread BSPP

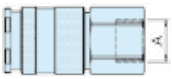

Thread A	Order code	Box Qty
3/8"	**27KAIW17MPN**	5
1/2"	**27KAIW21MPN**	5

Plug - Female Thread BSPP



Thread A	Order code	Box Qty
3/8"	**27SFIW17SXN**	10
1/2"	**27SFIW21SXN**	10

Coupling - Hose Barb

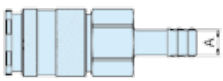

Thread A	Order code	Box Qty
10 mm	**27KATF10MPN**	2
13 mm	**27KATF13MPN**	2

Plug - Hose Barb



Thread A	Order code	Box Qty
8 mm	**27SFTF08SXN**	20
10 mm	**27SFTF10SXN**	20
13 mm	**27SFTF13SXN**	10

Rectus Series 1700KA - DN 10

Premium industrial coupling in nominal diameter 10 with high grade valve technology and unprecedented flow values and minimum coupling forces. Especially suited to compressed air applications with above average air consumption.

Chart / Air

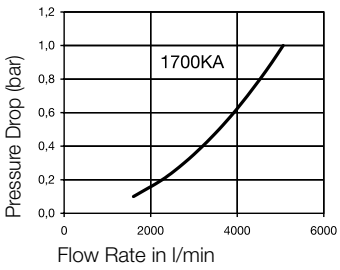

Advantages

- Single handed operation
- High flow valve
- Minimum coupling forces



Working Pressure
PB = 35 bar, maximum static working pressure with safety factor of 4 to1.

Working Temperature*
-20°C up to +100°C (NBR)
depending on the medium.
*At a temperature below -20°C and above +100°C special seals are available on request.

Material

Coupling

Back Body	Brass, Nickel Plated
Valve Body	Steel, QPQ treated
Sleeve	Brass, Nickel Plated
Valve	Brass
Spring and Locking Ring	AISI 301
Locking Balls	AISI 420
Seals	NBR
Plug	Steel Hardened, Zinc Plated

Coupling - Male Thread BSPT



Thread A	Order code	Box Qty
3/8"	**1700KAAK17SPN**	5
1/2"	**1700KAAK21SPN**	5
3/4"	**1700KAAK26SPN**	5

Plug - Male Thread BSPT

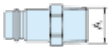

Thread A	Order code	Box Qty
1/4"	**27SFAK13SXN**	10
3/8"	**27SFAK17SXN**	10
1/2"	**27SFAK21SXN**	10

Coupling - Female Thread BSPP

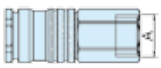

Thread A	Order code	Box Qty
3/8"	**1700KAIW17SPN**	5
1/2"	**1700KAIW21SPN**	5
3/4"	**1700KAIW26SPN**	5

Plug - Female Thread BSPP



Thread A	Order code	Box Qty
3/8"	**27SFIW17SXN**	10
1/2"	**27SFIW21SXN**	10

Coupling - Hose Barb

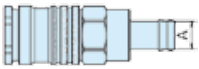

Thread A	Order code	Box Qty
10 mm	**1700KATF10SPN**	5
13 mm	**1700KATF13SPN**	5
16 mm	**1700KATF16SPN**	5

Plug - Hose Barb



Thread A	Order code	Box Qty
8 mm	**27SFTF08SXN**	20
10 mm	**27SFTF10SXN**	20
13 mm	**27SFTF13SXN**	10

Rectus Series 37KA - DN 11

1/2" Coupling-system according to US-MIL-Spec. C-4109 made of brass. Plug design optimised through greater insert depth.

Chart / Air

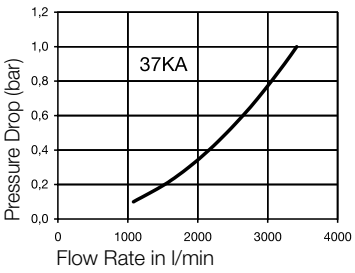

Advantages

- Single handed operation
- Tough construction



Working Pressure
PB = 35 bar, maximum static working pressure with safety factor of 4 to1.

Working Temperature*
-20°C up to +100°C (NBR)
depending on the medium.
*At a temperature below -20°C and above +100°C special seals are available on request.

Material

Coupling

Back Body	Brass
Valve Body	Brass
Sleeve	Brass
Valve	Brass
Spring and Locking Ring	AISI 301
Locking Balls	AISI 420
Seals	NBR
Plug	Steel Hardened, Nickel Plated

Coupling - Male Thread BSPP

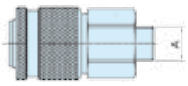

Thread A	Order code	Box Qty
3/8"	**37KAAW17MPX**	2
1/2"	**37KAAW21MPX**	2
3/4"	**37KAAW26MPX**	2

Plug - Male Thread BSPT



Thread A	Order code	Box Qty
1/2"	**37SFAK21SXN**	10
3/4"	**37SFAK26SXN**	5

Coupling - Female Thread BSPP

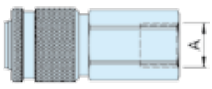

Thread A	Order code	Box Qty
3/8"	**37KAIW17MPX**	2
1/2"	**37KAIW21MPX**	2
3/4"	**37KAIW26MPX**	2

Plug - Female Thread BSPP

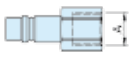

Thread A	Order code	Box Qty
1/2"	**37SFIW21SXN**	5
3/4"	**37SFIW26SXN**	5

Plug - Hose Barb



Thread A	Order code	Box Qty
13 mm	**37SFTF13SXN**	10
16 mm	**37SFTF16SXN**	10
19 mm	**37SFTF19SXN**	5

Parker Hannifin Corporation
Pneumatic Division - Europe

Tel: +45 63 12 83 00 | Email: ps@hymatik.com | www.hymatik.com | Hvidkaervej 27a, DK-5250 Odense SV, Denmark

Rectus Self-Venting Series 14KE - DN 5.5

The connection is made the same way as with all other quick connect coupling series, by simply pushing the plug in the coupling. The audible latching when the plug is securely in place signifies that the coupling is locked. The sleeve must be pulled back to release the first locking system before it can be disconnected. This closes the coupling valve. The compressed downstream air can now escape from the plug (hose). Pulling the sleeve back a second time releases the second locking system. The connection can now be safely undone. This self-venting coupling is designed for bleeding off trapped air.

Advantages

The system fulfils the requirements of ISO 4414

- increased safety standards in the work place
- the plastic sleeve does not scratch working surfaces



Self-Venting System

Chart / Air

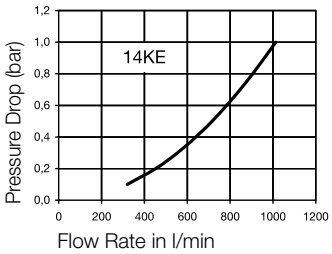

Caution

Not recommended for direct connection to compressed air tools. Reliable functioning can only be guaranteed in conjunction with original Rectus plugs made of steel.

Working Pressure

PB = 12 bar, maximum static working pressure with safety factor of 4 to1.

Working Temperature*

-20°C up to +60°C (NBR)
depending on the medium.
*At a temperature below -20°C and above +60°C special seals are available on request.

Material

Coupling

Back Body	Brass, Nickel Plated
Valve Body	Brass, Nickel Plated
Sleeve	Thermoplastic
Valve	Brass
Spring	AISI 301
Locking Balls	AISI 420
Seals	NBR
Pins	AISI 420
Plug	Steel Hardened, Nickel Pl.

Coupling - Male Thread BSPT

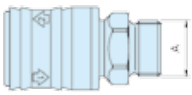

Thread A	Order code	Box Qty
1/4"	**14KEAK13MPN**	10
1/2"	**14KEAK21MPN**	10

Plug - Male Thread BSPT

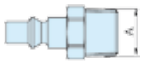

Thread A	Order code	Box Qty
1/4"	**22SFAK13SXN**	20
3/8"	**22SFAK17SXN**	20
1/2"	**22SFAK21SXN**	10

Coupling - Female Thread BSPP

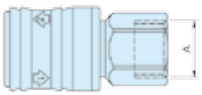

Thread A	Order code	Box Qty
1/4"	**14KEIW13MPN**	10
1/2"	**14KEIW21MPN**	10

Plug - Female Thread BSPP

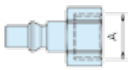

Thread A	Order code	Box Qty
1/4"	**22SFIW13SXN**	20
3/8"	**22SFIW17SXN**	20

Plug - Hose Barb



Thread A	Order code	Box Qty
6 mm	**22SFTF06SXN**	20
8 mm	**22SFTF08SXN**	20
10 mm	**22SFTF10SXN**	20

Rectus Self-Venting Series 24KE - DN 5.5

The connection is made the same way as with all other quick connect coupling series, by simply pushing the plug in the coupling. The audible latching when the plug is securely in place signifies that the coupling is locked. The sleeve must be pulled back to release the first locking system before it can be disconnected. This closes the coupling valve. The compressed downstream air can now escape from the plug (hose). Pulling the sleeve back a second time releases the second locking system. The connection can now be safely undone. This self-venting coupling is designed for bleeding off trapped air.

Advantages

The system fulfils the requirements of ISO 4414

- increased safety standards in the work place
- the plastic sleeve does not scratch working surfaces



Chart / Air

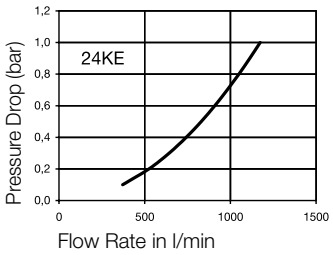

Caution

Not recommended for direct connection to compressed air tools. Reliable functioning can only be guaranteed in conjunction with original Rectus plugs made of steel.

Working Pressure
PB = 12 bar, maximum static working pressure with safety factor of 4 to1.

Working Temperature*
-20°C up to +60°C (NBR)
depending on the medium.
*At a temperature below -20°C and above +60°C special seals are available on request.

Material

Coupling	
Back Body	Brass, Nickel Plated
Valve Body	Brass, Nickel Plated
Sleeve	Thermoplastic
Valve	Brass
Spring and Locking Ring	AISI 301
Locking Balls	AISI 420
Seals	NBR
Pins	AISI 420
Plug	Steel Hardened, Nickel Pl.

Coupling - Male Thread BSPT

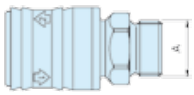

Thread A	Order code	Box Qty
1/4"	**24KEAK13MPN**	10
1/2"	**24KEAK21MPN**	10

Plug - Male Thread BSPT

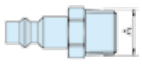

Thread A	Order code	Box Qty
1/4"	**23SFAK13SXN**	20
3/8"	**23SFAK17SXN**	20

Coupling - Female Thread BSPP

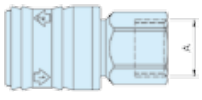

Thread A	Order code	Box Qty
1/4"	**24KEIW13MPN**	10
1/2"	**24KEIW21MPN**	10

Plug - Female Thread BSPP

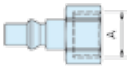

Thread A	Order code	Box Qty
1/4"	**23SFIW13SXN**	20
3/8"	**23SFIW17SXN**	20

Plug - Hose Barb

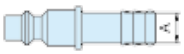

Thread A	Order code	Box Qty
6 mm	**23SFTF06SXN**	20
8 mm	**23SFTF08SXN**	20
10 mm	**23SFTF10SXN**	20

Tel: +45 63 12 83 00 | Email: ps@hymatik.com | www.hymatik.com | Hvidkaervej 27a, DK-5250 Odense SV, Denmark

Rectus Self-Venting Series 26KE - DN 7.4

The connection is made the same way as with all other quick connect coupling series, by simply pushing the plug in the coupling. The audible latching when the plug is securely in place signifies that the coupling is locked. The sleeve must be pulled back to release the first locking system before it can be disconnected. This closes the coupling valve. The compressed downstream air can now escape from the plug (hose). Pulling the sleeve back a second time releases the second locking system. The connection can now be safely undone. This self-venting coupling is designed for bleeding off trapped air.

Chart / Air

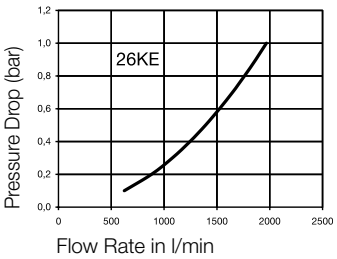

Advantages

The system fulfils the requirements of ISO 4414
- increased safety standards in the work place
- the plastic sleeve does not scratch working surfaces



Self-Venting System

Caution

Not recommended for direct connection to compressed air tools. Reliable functioning can only be guaranteed in conjunction with original Rectus plugs made of steel.

Working Pressure

PB = 12 bar, maximum static working pressure with safety factor of 4 to1.

Working Temperature*

-20°C up to +60°C (NBR)
depending on the medium.
*At a temperature below -20°C and above +60°C special seals are available on request.

Material

Coupling

Back Body	Brass, Nickel Plated
Valve Body	Brass, Nickel Plated
Sleeve	Thermoplastic
Valve	Brass
Spring	AISI 301
Locking Balls	AISI 420
Seals	NBR
Pin	AISI 420
Plug	Steel Hardened, Nickel Pl.

Coupling - Male Thread BSPP

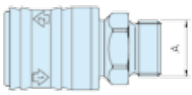

Thread A	Order code	Box Qty
1/4"	**26KEAW13MPN**	10
1/2"	**26KEAW21MPN**	10

Plug - Male Thread BSPT



Thread A	Order code	Box Qty
1/4"	**25SFAK13SXZ**	20
3/8"	**25SFAK17SXZ**	20
1/2"	**25SFAK21SXZ**	10

Coupling - Female Thread BSPP

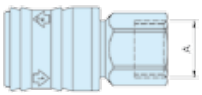

Thread A	Order code	Box Qty
1/4"	**26KEIW13MPN**	5
3/8"	**26KEIW17MPN**	5

Plug - Female Thread BSPP

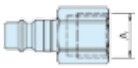

Thread A	Order code	Box Qty
1/4"	**25SFIW13SXZ**	20
3/8"	**25SFIW17SXZ**	20

Plug - Hose Barb

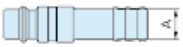

Thread A	Order code	Box Qty
9 mm	**25SFTF09SXZ**	20
13 mm	**25SFTF13SXZ**	20

Parker Hannifin Corporation
Pneumatic Division - Europe

Tel: +45 63 12 83 00 | Email: ps@hymatik.com | www.hymatik.com | Hvidkaervej 27a, DK-5250 Odense SV, Denmark

Rectus Self-Venting Series 1700KE - DN 10

The 1700KE series is a safety coupling with a self-venting system. When the sleeve is pulled back, the plug is released yet remains locked in. The coupling valve closes.
The compressed air can now escape from the plug (hose). By operating the sleeve again in the direction of the plug, the second locking system is released. Only now can the connection be disengaged.

Chart / Air

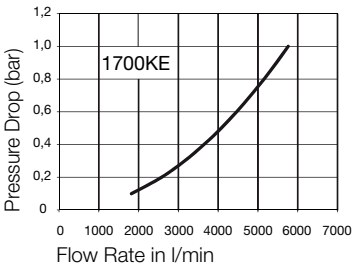

Advantages

The system fulfils the requirements of ISO 4414
- increased safety standards in the work place
- robust, all-metal structure
- high-flow-valve



Self-Venting System

Caution

Not recommended for direct connection to compressed air tools. Reliable functioning can only be guaranteed in conjunction with original Parker Rectus plugs made of steel.

Working Pressure
PB = 12 bar, maximum static working pressure with safety factor of 4 to1.

Working Temperature*
-20°C up to +100°C (NBR)
depending on the medium.
*At a temperature below -20°C and above +100°C special seals are available on request.

Material

Coupling

Back Body	Brass, Nickel Plated
Valve Body	Steel, Zinc plated, Thick-film passivated
Sleeve	Steel, Hardened, Nickel Pl.
Valve	Brass
Spring	AISI 301
Locking Balls	AISI 420
Seals	NBR
Plug	Steel Hardened, Nickel Pl.

Coupling - Male Thread BSPT

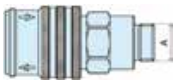

Thread A	Order code	Box Qty
3/8"	**1700KEAW17SPN**	5
1/2"	**1700KEAW21SPN**	5
3/4"	**1700KEAW26SPN**	5

Plug - Male Thread BSPT



Thread A	Order code	Box Qty
1/4"	**27SFAK13SXN**	10
3/8"	**27SFAK17SXN**	10
1/2"	**27SFAK21SXN**	10

Coupling - Female Thread BSPP

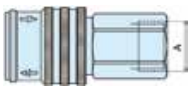

Thread A	Order code	Box Qty
3/8"	**1700KEIW17SPN**	5
1/2"	**1700KEIW21SPN**	5
3/4"	**1700KEIW26SPN**	5

Plug - Female Thread BSPP



Thread A	Order code	Box Qty
3/8"	**27SFIW17SXN**	10
1/2"	**27SFIW21SXN**	10

Plug - Hose Barb

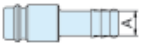

Thread A	Order code	Box Qty
8 mm	**27SFTF08SXN**	10
10 mm	**27SFTF10SXN**	10
13 mm	**27SFTF13SXN**	10

Parker Hannifin Corporation
Pneumatic Division - Europe

Tel: +45 63 12 83 00 | Email: ps@hymatik.com | www.hymatik.com | Hvidkaervej 27a, DK-5250 Odense SV, Denmark

Blow Guns

Plastic - with Aluminium Extension Nozzle



Thread	Order code	Box Qty
1/4"	**AK13**	20

Aluminium with Standard Nozzle



Thread	Order code	Box Qty
1/4"	**AA13**	20

Plastic, Aluminium Nozzle, Plug 26SF Series



Thread	Order code	Box Qty
26SF	**AK26SF**	20

Aluminium, Standard Nozzle, Plug 26SF Series



Thread	Order code	Box Qty
26SF	**AA26SF**	20

Hose Tail Barb, Brass

Male Thread



Connection	Order code	Box Qty
G 1/4, 8 mm	**GT13/08**	20
G 3/8, 13 mm	**GT17/13**	20
G 1/2, 9 mm	**GT21/09**	20
G 1/2, 13 mm	**GT21/13**	20

3 Way Manifold Assembly

Brass, with Coulings 26KA Series



Connection	Order code	Box Qty
G 1/4 i.	**DM13I**	20
G 3/8 i.	**DM17I**	20
G 1/2 i.	**DM21I**	20

PA12 Tubing

26 Series Coupling and Plug with Spring Guard



Connection /mm	Length	Order code	Box Qty
6,3 x 7,9	5,0 m	**SP08/050/K+S**	1
9,5 x 11,8	7,5 m	**SP12/075/K+S**	1

PU Tubing

with Straight Extensions 508 mm and 127 mm



Connection /mm	Length	Order code	Box Qty
6,3 x 9,5	6,0 m	**PU10/060/DV**	1
8,0 x 12,0	7,5 m	**PU12/075/DV**	1

Parker Hannifin Corporation
Pneumatic Division - Europe

Tel: +45 63 12 83 00 | Email: ps@hymatik.com | www.hymatik.com | Hvidkaervej 27a, DK-5250 Odense SV, Denmark

Notes

Tel: +45 63 12 83 00 | Email: ps@hymatik.com | www.hymatik.com | Hvidkaervej 27a, DK-5250 Odense SV, Denmark

Notes

Tel: +45 63 12 83 00 | Email: ps@hymatik.com | www.hymatik.com | Hvidkaervej 27a, DK-5250 Odense SV, Denmark

Notes

Tel: +45 63 12 83 00 | Email: ps@hymatik.com | www.hymatik.com | Hvidkaervej 27a, DK-5250 Odense SV, Denmark

Notes

Tel: +45 63 12 83 00 | Email: ps@hymatik.com | www.hymatik.com | Hvidkaervej 27a, DK-5250 Odense SV, Denmark

Notes

Tel: +45 63 12 83 00 | Email: ps@hymatik.com | www.hymatik.com | Hvidkaervej 27a, DK-5250 Odense SV, Denmark

Notes

Tel: +45 63 12 83 00 | Email: ps@hymatik.com | www.hymatik.com | Hvidkaervej 27a, DK-5250 Odense SV, Denmark

Notes

Tel: +45 63 12 83 00 | Email: ps@hymatik.com | www.hymatik.com | Hvidkaervej 27a, DK-5250 Odense SV, Denmark

Notes

Tel: +45 63 12 83 00 | Email: ps@hymatik.com | www.hymatik.com | Hvidkaervej 27a, DK-5250 Odense SV, Denmark

Notes

Tel: +45 63 12 83 00 | Email: ps@hymatik.com | www.hymatik.com | Hvidkaervej 27a, DK-5250 Odense SV, Denmark

Notes

Tel: +45 63 12 83 00 | Email: ps@hymatik.com | www.hymatik.com | Hvidkaervej 27a, DK-5250 Odense SV, Denmark

Notes

Tel: +45 63 12 83 00 | Email: ps@hymatik.com | www.hymatik.com | Hvidkaervej 27a, DK-5250 Odense SV, Denmark

Notes

Tel: +45 63 12 83 00 | Email: ps@hymatik.com | www.hymatik.com | Hvidkaervej 27a, DK-5250 Odense SV, Denmark

Notes

Tel: +45 63 12 83 00 | Email: ps@hymatik.com | www.hymatik.com | Hvidkaervej 27a, DK-5250 Odense SV, Denmark

At Parker, we're guided by a relentless drive to help our customers become more productive and achieve higher levels of profitability by engineering the best systems for their requirements. It means looking at customer applications from many angles to find new ways to create value. Whatever the motion and control technology need, Parker has the experience, breadth of product and global reach to consistently deliver. No company knows more about motion and control technology than Parker. For further info call 00800 27 27 5374.



AEROSPACE

Key Markets
- Aircraft engines
- Business & general aviation
- Commercial transports
- Land-based weapons systems
- Military aircraft
- Missiles & launch vehicles
- Regional transports
- Unmanned aerial vehicles

Key Products
- Flight control systems & components
- Fluid conveyance systems
- Fluid metering delivery & atomization devices
- Fuel systems & components
- Hydraulic systems & components
- Inert nitrogen generating systems
- Pneumatic systems & components
- Wheels & brakes



CLIMATE CONTROL

Key Markets
- Agriculture
- Air conditioning
- Food, beverage & dairy
- Life sciences & medical
- Precision cooling
- Processing
- Transportation

Key Products
- CO^2 controls
- Electronic controllers
- Filter driers
- Hand shut-off valves
- Hose & fittings
- Pressure regulating valves
- Refrigerant distributors
- Safety relief valves
- Solenoid valves
- Thermostatic expansion valves



ELECTROMECHANICAL

Key Markets
- Aerospace
- Factory automation
- Food & beverage
- Life science & medical
- Machine tools
- Packaging machinery
- Paper machinery
- Plastics machinery & converting
- Primary metals
- Semiconductor & electronics
- Textile
- Wire & cable

Key Products
- AC/DC drives & systems
- Electric actuators
- Controllers
- Gantry robots
- Gearheads
- Human machine interfaces
- Industrial PCs
- Inverters
- Linear motors, slides and stages
- Precision stages
- Stepper motors
- Servo motors, drives & controls
- Structural extrusions



FILTRATION

Key Markets
- Food & beverage
- Industrial machinery
- Life sciences
- Marine
- Mobile equipment
- Oil & gas
- Power generation
- Process
- Transportation

Key Products
- Analytical gas generators
- Compressed air & gas filters
- Condition monitoring
- Engine air, fuel & oil filtration & systems
- Hydraulic, lubrication & coolant filters
- Process, chemical, water & microfiltration filters
- Nitrogen, hydrogen & zero air generators



FLUID & GAS HANDLING

Key Markets
- Aerospace
- Agriculture
- Bulk chemical handling
- Construction machinery
- Food & beverage
- Fuel & gas delivery
- Industrial machinery
- Mobile
- Oil & gas
- Transportation
- Welding

Key Products
- Brass fittings & valves
- Diagnostic equipment
- Fluid conveyance systems
- Industrial hose
- PTFE & PFA hose, tubing & plastic fittings
- Rubber & thermoplastic hose & couplings
- Tube fittings & adapters
- Quick disconnects



HYDRAULICS

Key Markets
- Aerospace
- Aerial lift
- Agriculture
- Construction machinery
- Forestry
- Industrial machinery
- Mining
- Oil & gas
- Power generation & energy
- Truck hydraulics

Key Products
- Diagnostic equipment
- Hydraulic cylinders & accumulators
- Hydraulic motors & pumps
- Hydraulic systems
- Hydraulic valves & controls
- Power take-offs
- Rubber & thermoplastic hose & couplings
- Tube fittings & adapters
- Quick disconnects



PNEUMATICS

Key Markets
- Aerospace
- Conveyor & material handling
- Factory automation
- Food & beverage
- Life science & medical
- Machine tools
- Packaging machinery
- Transportation & automotive

Key Products
- Air preparation
- Compact cylinders
- Field bus valve systems
- Grippers
- Guided cylinders
- Manifolds
- Miniature fluidics
- Pneumatic accessories
- Pneumatic actuators & grippers
- Pneumatic valves and controls
- Rodless cylinders
- Rotary actuators
- Tie rod cylinders
- Vacuum generators, cups & sensors



PROCESS CONTROL

Key Markets
- Chemical & refining
- Food, beverage & dairy
- Medical & dental
- Microelectronics
- Oil & gas
- Power generation

Key Products
- Analytical sample conditioning products & systems
- Fluoropolymer chemical delivery fittings, valves & pumps
- High purity gas delivery fittings, valves & regulators
- Instrumentation fittings, valves & regulators
- Medium pressure fittings & valves
- Process control manifolds



SEALING & SHIELDING

Key Markets
- Aerospace
- Chemical processing
- Consumer
- Energy, oil & gas
- Fluid power
- General industrial
- Information technology
- Life sciences
- Military
- Semiconductor
- Telecommunications
- Transportation

Key Products
- Dynamic seals
- Elastomeric o-rings
- EMI shielding
- Extruded & precision-cut, fabricated elastomeric seals
- Homogeneous & inserted elastomeric shapes
- High temperature metal seals
- Metal & plastic retained composite seals
- Thermal management

ENGINEERING YOUR SUCCESS.

Parker Hannifin Corporation
Pneumatic Division - Europe

Tel: +45 63 12 83 00 | Email: ps@hymatik.com | www.hymatik.com | Hvidkaervej 27a, DK-5250 Odense SV, Denmark

Parker Worldwide

Europe, Middle East, Africa

AE – United Arab Emirates, Dubai
Tel: +971 4 8127100
parker.me@parker.com

AT – Austria, Wiener Neustadt
Tel: +43 (0)2622 23501-0
parker.austria@parker.com

AT – Eastern Europe, Wiener Neustadt
Tel: +43 (0)2622 23501 900
parker.easteurope@parker.com

AZ – Azerbaijan, Baku
Tel: +994 50 2233 458
parker.azerbaijan@parker.com

BE/LU – Belgium, Nivelles
Tel: +32 (0)67 280 900
parker.belgium@parker.com

BG – Bulgaria, Sofia
Tel: +359 2 980 1344
parker.bulgaria@parker.com

BY – Belarus, Minsk
Tel: +375 17 209 9399
parker.belarus@parker.com

CH – Switzerland, Etoy
Tel: +41 (0)21 821 87 00
parker.switzerland@parker.com

CZ – Czech Republic, Klecany
Tel: +420 284 083 111
parker.czechrepublic@parker.com

DE – Germany, Kaarst
Tel: +49 (0)2131 4016 0
parker.germany@parker.com

DK – Denmark, Ballerup
Tel: +45 43 56 04 00
parker.denmark@parker.com

ES – Spain, Madrid
Tel: +34 902 330 001
parker.spain@parker.com

FI – Finland, Vantaa
Tel: +358 (0)20 753 2500
parker.finland@parker.com

FR – France, Contamine s/Arve
Tel: +33 (0)4 50 25 80 25
parker.france@parker.com

GR – Greece, Athens
Tel: +30 210 933 6450
parker.greece@parker.com

HU – Hungary, Budaörs
Tel: +36 23 885 470
parker.hungary@parker.com

IE – Ireland, Dublin
Tel: +353 (0)1 466 6370
parker.ireland@parker.com

IT – Italy, Corsico (MI)
Tel: +39 02 45 19 21
parker.italy@parker.com

KZ – Kazakhstan, Almaty
Tel: +7 7273 561 000
parker.easteurope@parker.com

NL – The Netherlands, Oldenzaal
Tel: +31 (0)541 585 000
parker.nl@parker.com

NO – Norway, Asker
Tel: +47 66 75 34 00
parker.norway@parker.com

PL – Poland, Warsaw
Tel: +48 (0)22 573 24 00
parker.poland@parker.com

PT – Portugal, Leca da Palmeira
Tel: +351 22 999 7360
parker.portugal@parker.com

RO – Romania, Bucharest
Tel: +40 21 252 1382
parker.romania@parker.com

RU – Russia, Moscow
Tel: +7 495 645-2156
parker.russia@parker.com

SE – Sweden, Spånga
Tel: +46 (0)8 59 79 50 00
parker.sweden@parker.com

SL – Slovenia, Novo Mesto
Tel: +386 7 337 6650
parker.slovenia@parker.com

TR – Turkey, Istanbul
Tel: +90 216 4997081
parker.turkey@parker.com

UA – Ukraine, Kiev
Tel: +380 44 494 2731
parker.poland@parker.com

UK – United Kingdom, Warwick
Tel: +44 (0)1926 317 878
parker.uk@parker.com

ZA – South Africa, Kempton Park
Tel: +27 (0)11 961 0700
parker.southafrica@parker.com

North America

CA – Canada, Milton, Ontario
Tel: +1 905 693 3000

US – USA, Cleveland
Tel: +1 216 896 3000

Asia Pacific

AU – Australia, Castle Hill
Tel: +61 (0)2-9634 7777

CN – China, Shanghai
Tel: +86 21 2899 5000

HK – Hong Kong
Tel: +852 2428 8008

IN – India, Mumbai
Tel: +91 22 6513 7081-85

JP – Japan, Tokyo
Tel: +81 (0)3 6408 3901

KR – South Korea, Seoul
Tel: +82 2 559 0400

MY – Malaysia, Shah Alam
Tel: +60 3 7849 0800

NZ – New Zealand, Mt Wellington
Tel: +64 9 574 1744

SG – Singapore
Tel: +65 6887 6300

TH – Thailand, Bangkok
Tel: +662 186 7000

TW – Taiwan, Taipei
Tel: +886 2 2298 8987

South America

AR – Argentina, Buenos Aires
Tel: +54 3327 44 4129

BR – Brazil, Sao Jose dos Campos
Tel: +55 12 4009 3500

CL – Chile, Santiago
Tel: +562 2303 9640

MX – Mexico, Toluca
Tel: +52 72 2275 4200

European Product Information Centre
Free phone: 00 800 27 27 5374
(from AT, BE, CH, CZ, DE, DK, EE, ES, FI, FR, IE, IL, IS, IT, LU, MT, NL, NO, PL, PT, RU, SE, SK, UK, ZA)

© 2015 Parker Hannifin Corporation. All rights reserved.

Catalogue PDE2600PNUK - V11 - December 2015

Parker Hannifin Ltd.
Tachbrook Park Drive
Tachbrook Park,
Warwick, CV34 6TU
United Kingdom
Tel.: +44 (0) 1926 317 878
Fax: +44 (0) 1926 317 855
parker.uk@parker.com
www.parker.com

Your local authorized Parker distributor