WH-M-KDS-EO-3® High pressure banjo elbow

X1) O-ring
X2) Indication-ring
X3) Sealing ring KDS
X4) O-ring
T1 = Special thread caracteristic-Ø

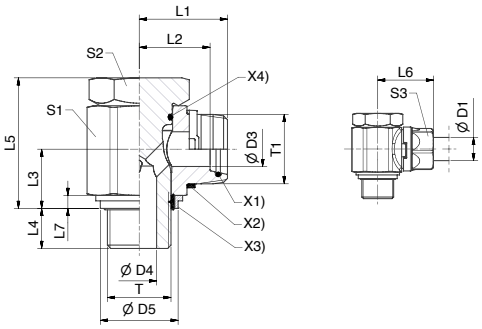

D1	T	D3	D4	D5	T1	L1	L2	L3	L4	L5	L6	L7	S1	S2	S3	Weight g/1 piece	Order code*	PN
6	M10X1	4	4.5	14.9	11.5	18.5	14	10.5	8	24	23.5	2.5	17	17	14	52	**WH06P3MKDSOMDCF**	420
8	M12X1.5	6	6	17	14.5	21	16	14	12	30	27	3	22	19	17	92	**WH08P3MKDSOMDCF**	420
10	M14X1.5	8	6	18.9	16.5	22	17	14	12	30	28.5	3	22	19	19	101	**WH10P3MKDSOMDCF**	420
12	M16X1.5	10	7.5	21.9	19	24.5	19.5	16.5	12	36	31	3	27	24	22	172	**WH12P3MKDSOMDCF**	420
15	M18X1.5	12	9	23.9	24	30.5	25.5	18	12	39.5	38.5	3	32	30	27	270	**WH15P3MKDSOMDCF**	420
16	M22X1.5	12	12	26.9	24	30.5	24.5	20.5	14	45	38.5	4.5	32	30	27	311	**WH16P3MKDSOMDCF**	420
18	M22X1.5	15	12	26.9	26	30.5	24.5	20.5	14	45	38.5	4.5	32	30	30	309	**WH18P3MKDSOMDCF**	420
20	M27X2	16	16	32.9	29.5	36.5	30.5	24	16	53	46	3.5	41	36	32	545	**WH20P3MKDSOMDCF**	420
22	M26X1.5	18	17	31.9	29.5	34.5	28.5	24	16	53	43	3.5	41	36	32	529	**WH22P3MKDSOMDCF**	250
25	M33X2	20	21	39.9	37	43.5	36.5	30.5	18	66	53.5	3.5	50	46	41	982	**WH25P3MKDSOMDCF**	420
28	M33X2	24	21	39.9	37	39.5	32.5	30.5	18	66	48	3.5	50	46	41	947	**WH28P3MKDSOMDCF**	250
30	M42X2	25	27	49.9	43.5	51	43	35.5	20	76	63	3.5	60	55	50	1597	**WH30P3MKDSOMDCF**	420
35	M42X2	30	27	49.9	45	47	39	35.5	20	76	57	3.5	60	55	50	1547	**WH35P3MKDSOMDCF**	250
38	M48X2	32	34	55.9	52	58	49	40.5	22	87	71	3.5	70	60	60	2320	**WH38P3MKDSOMDCF**	420
42	M48X2	36	34	55.9	52	54	46	40.5	22	87	64	3.5	70	60	60	2255	**WH42P3MKDSOMDCF**	250

$\frac{\text{PN (bar)}}{10}$ = PN (MPa)

Delivery without nut
* Please add the **suffixes** below according to the sealing material required
NBR = Standard. no suffix required
FKM = on request

Tel: +45 63 12 83 00 | Email: ps@hymatik.com | www.hymatik.com | Hvidkaervej 27a, DK-5250 Odense SV, Denmark