BASED ON B.S.8888

DO NOT SCALE IF IN DOUBT ASK

DIMENSIONS IN MILLIMETRES

TECHNICAL SPECIFICATION
****

INLET AIR QUALITY:	ISO 8573-1:2001 CLASS 3.2.1
INLET PRESSURE:	4-10 BARG / 58-145 PSIG
FLOW RATE:	3.5 L/MIN / 7.42 CFH
'A' COMPRESSED AIR INLET:	1/8" TUBE (COMPRESSION FITTING)
'B' ZERO AIR OUTLET:	1/8" TUBE (COMPRESSION FITTING)
VOLTAGE OPTION 1:	115V, 50/60HZ
VOLTAGE OPTION 2:	230V, 50/60HZ
POWER CONSUMPTION - 230V	230W
- 115V	160W
WEIGHT:	14.2 KG / 31.3 LBS

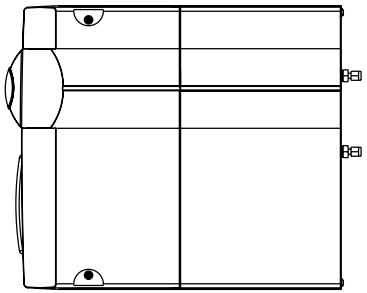

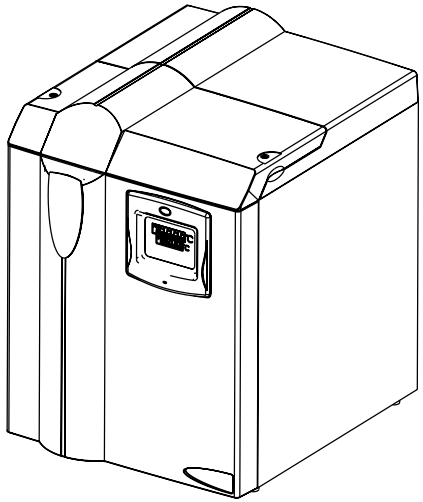

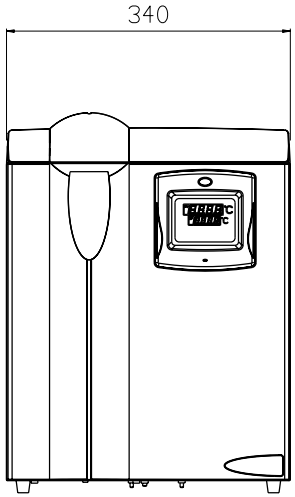

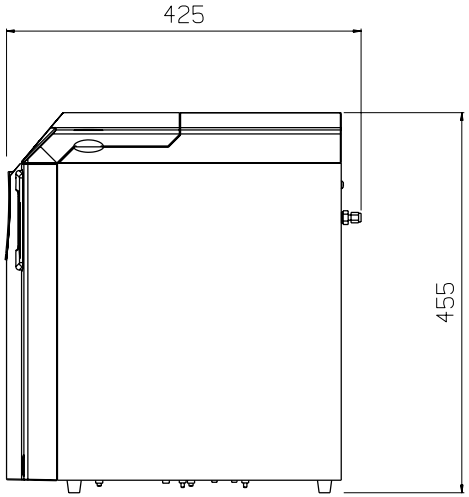

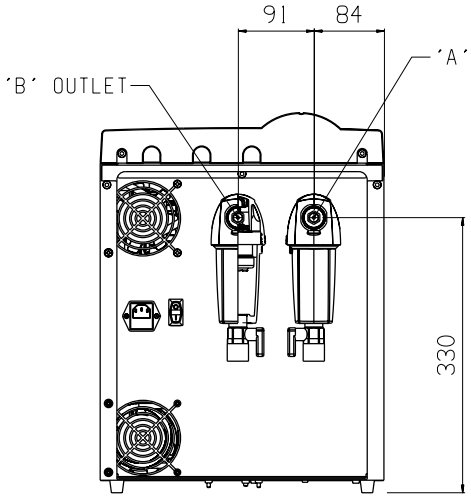

GENERAL TOLERANCES UNLESS OTHERWISE STATED

MACHINED DIMENSIONS
.XX ±0.13 UP TO 300 ±0.3
.X ±0.25 OVER 300 TO 600 ±0.5

POSITIONAL TOLERANCE
PLAIN HOLES ±0.13
TAPPED HOLES ±0.25
CONCENTRICITY TOLERANCE 0.13 TIR

MACHINED SURFACES INDICATED THUS
SURFACE TEXTURE TO BS 1134
VALUES IN MICROMETRES

ANGLES ±1/2°(EXCEPT CHAMFERS)

METRIC THREADS TO BS 3643 MED. CLASS
EXTERNAL 6g INTERNAL 6H
PIPE THREADS
PRESSURE TIGHT TO BS 21

SHEET METALWORK & FABRICATIONS
SHEET METALWORK DIMENSIONS
UP TO 500 ±0.5
OVER 500 TO 1000 ±1.0
OVER 1000 ±1.5

FABRICATED PARTS DIMENSIONS
UP TO 500 ±2
OVER 500 TO 1000 ±4
OVER 1000 ±6

POSITIONAL TOLERANCE FOR PLAIN & TAPPED HOLES
UP TO 500 ±1.0
OVER 500 ±2.0

REV	DCO No.	DATE	NAME
0	63522	3Aug2009	EJ

Parker
dominick hunter
Parker Hannifin Ltd
Dukesway, Team Valley,
Gateshead, Tyne & Wear
England NE11 0PZ
TEL +44 (0)191 402 9000
FAX +44 (0)191 482 6296
www.dominickhunter.com

THIS DOCUMENT IS COPYRIGHT AND IS THE PROPERTY OF PARKER HANNIFIN LTD. IT MUST NOT BE COPIED IN WHOLE OR PART, USED FOR MANUFACTURE OF, OR OTHERWISE DISCLOSED WITHOUT PRIOR WRITTEN CONSENT OF THE COMPANY
©2009 A1

MATERIAL	SCALE		DRAWN	CHECKED	APPROVED	TITLE	DRG. No	SHEET
GEN. ARRGT.	1 : .33	NAME	EJ	MG	AG	UHP-35ZA-S	620-1284	1 of 1
		DATE	3Aug2009	3Aug2009	4Aug2009			