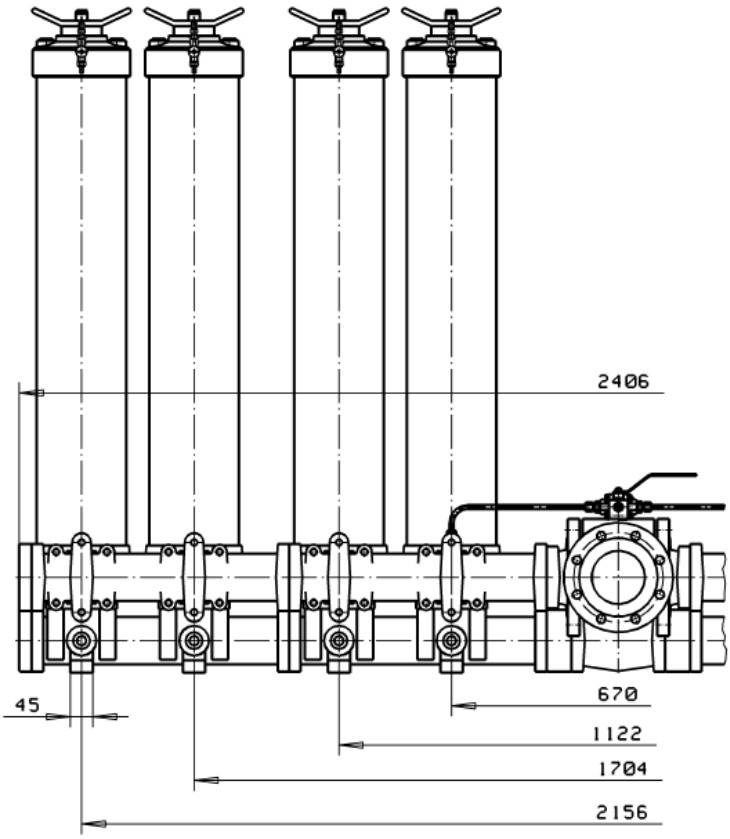

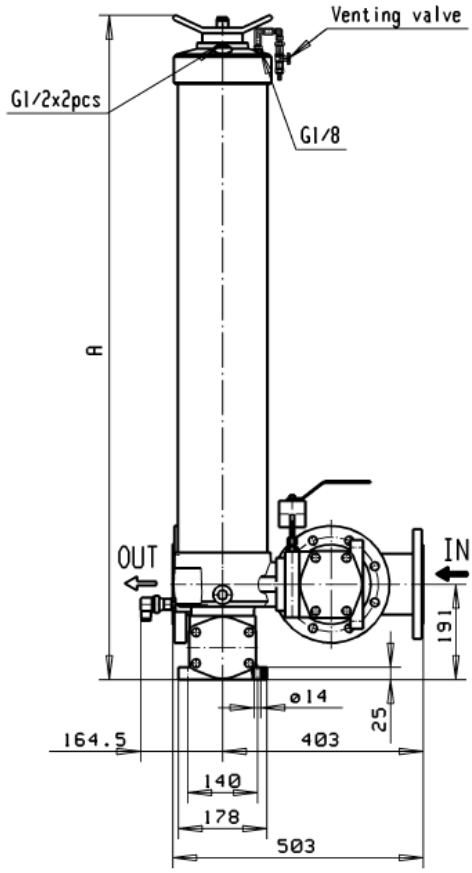

TYPE	A
Length 2	780
Length 3	1340

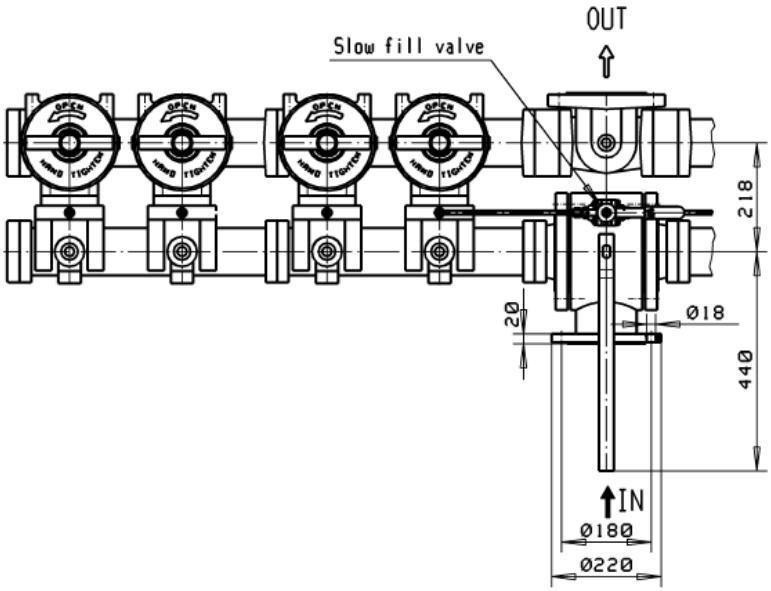

Dimensions in mm

130S T-system 4+4
Dimensional drawing

Parker