aerospace
climate control
electromechanical
filtration
fluid & gas handling
hydraulics
pneumatics
process control
sealing & shielding

Industrial Process Filtration

Filtration products for Industrial Applications

Parker

ENGINEERING YOUR SUCCESS.

WARNING – USER RESPONSIBILITY

FAILURE OR IMPROPER SELECTION OR IMPROPER USE OF THE PRODUCTS DESCRIBED HEREIN OR RELATED ITEMS CAN CAUSE DEATH, PERSONAL INJURY AND PROPERTY DAMAGE.

This document and other information from Parker-Hannifin Corporation, its subsidiaries and authorized distributors provide product or system options for further investigation by users having technical expertise.

The user, through its own analysis and testing, is solely responsible for making the final selection of the system and components and assuring that all performance, endurance, maintenance, safety and warning requirements of the application are met. The user must analyze all aspects of the application, follow applicable industry standards, and follow the information concerning the product in the current product catalog and in any other materials provided from Parker or its subsidiaries or authorized distributors.

To the extent that Parker or its subsidiaries or authorized distributors provide component or system options based upon data or specifications provided by the user, the user is responsible for determining that such data and specifications are suitable and sufficient for all applications and reasonably foreseeable uses of the components or systems.

Contents

INTRODUCTION 1

Membrane Filter Cartridges 3
Clariflow®-G Filter Cartridge 5
Evadur Filter Cartridge 7
Fluoroflow® Filter Cartridge 9
Proflow™ II-G (General Grade) Filter Cartridge 11

Pleated Filter Cartridges 13
Abso-Mate™ Filter Cartridge 15
Claripor™ Filter Cartridge 17
Flo-Pac® Filter Cartridge 19
Flo-Pac® + Filter Cartridge 21
Glass-Mate™ Filter Cartridge 23
Fulflo® 1401 Pleated Filter Cartridge 25
Fulflo® PCC Filter Cartridge 27
Fulflo® Poly-Mate™ Filter Cartridge 29
Fulflo® Poly-Mate™ Plus Filter Cartridge 31

Large Diameter Pleated Filter Cartridges 33
Fulflo® HF Depthflo™ Filter Cartridge 35
Fulflo® MaxGuard Filter Cartridge 37
Fulflo® MaxGuard SELECT Filter Cartridge 39
Fulflo® MegaFlow™ Filter Cartridge 41
Fulflo® MegaFlow™ Plus Filter Cartridge 43
Fulflo® ParMax Filter Cartridge 45
Fulflo® ParMax SELECT Filter Cartridge 47

Depth Media Filter Cartridges 49
Avasan™ Filter Cartridge 51
Fulflo® DuraBond™ Filter Cartridge 53
Fulflo® Honeycomb™ Filter Cartridge 55
Fulflo® MegaBond™ Nominal Filter Cartridge 59
Fulflo® MegaBond Plus™ Filter Cartridge 61
Fulflo® ProBond™ Filter Cartridge 63
Fulflo® SWC Filter Cartridge 65
Fulflo® XTL™ Filter Cartridge 67

Filter Bags & Strainers 69
Fulflo® Basket Strainers 71
Fulflo® Filter Bags 73
Fulflo® HS Pleated Bags (HSPB) 77
Fulflo® Pleated Bags (PB) 79
Fulflo® XLH Filter Bags 83

Sorbent Media Filter Series 85
Fulflo® TruBind™ 300 Filter Cartridge 87
Fulflo® TruBind™ 400 Filter Cartridge 89

Metallic Media Filter Series 91
Fulflo® Metallic Filter Cartridges 93
Steelflow™ Filter Cartridges 95

Coalescers 97
Fulflo® LC Coalescer 99
Naptha Coalescer 101
Solvent and Caustic Coalescer 103

Single Cartridge Filter Vessels 105
Fulflo® B Single Cartridge Filter Vessel 107
Fulflo® BSSB Single Cartridge Filter Vessel 111
Fulflo® EH Single Cartridge Filter Vessel 113
Fulflo® High-Pressure Filter Vessel (4.5C) 115
Fulflo® "M" Series Single Cartridge Filter Vessel 117
Fulflo® TC Single Cartridge Filter Vessel 119
Trufluor™ Single Cartridge Filter Vessel 121
Trufluor +™ Single Cartridge Filter Vessel 123

Multi-Cartridge Filter Vessels 125
Fulflo® CH Multi-Cartridge Filter Vessel 127
Fulflo® CP Multi-Cartridge Filter Vessel 129
Fulflo® EH Multi-Cartridge Filter Vessel 131
Fulflo® FE Multi-Cartridge Filter Vessel 135
Fulflo® FP Multi-Cartridge Filter Vessel 137
Fulflo® HT Multi-Cartridge Filter Vessel 139
Fulflo® MegaFlow Multi-Cartridge Filter Vessel 141
Fulflo® MP Multi-Cartridge Filter Vessel 143
Fulflo® P Multi-Cartridge Filter Vessel 147
Fulflo® ParMax Multi-Cartridge Filter Vessel 149
Fulflo® S Multi-Cartridge Filter Vessel 153
Fulflo® SF Multi-Cartridge Filter Vessel 155
Fulflo® WH Multi-Cartridge Filter Vessel 157

Bag Filter Vessels 161
Fulflo® CB Bag Filter Vessel 163
Fulflo® EB Multi-Bag Filter Vessel 165
Fulflo® EB Single Bag Filter Vessel 167
Fulflo® FB Bag Filter Vessel 171
Fulflo® SB Bag Filter Vessel 173

Appendix 175
End Cap Configurations 177
Glossary of Filtration Technology 179
Standard Screen Micrometer Conversion Chart 183
Offer of Sale 184

Innovation

Leader in process filtration, separation and purification

Parker Industrial Process Filtration products set the highest standards for filtrate quality, product reliability and cost-effective use. Parker products provide optimal solutions for industrial applications and are available in lengths from 4 to 50 inches in configurations to retrofit all commonly installed filter housings. Our diverse line of products are offered in membrane, pleated, depth, bag, sorbent, and metallic media to meet the varying demands of production-, pilot- and laboratory-scale requirements. Removal ratings from 0.02 to >800 µm are available. All Parker products are backed by in-depth Technical Support, fast order turnaround and factory-trained local Distributors.

INDUSTRIAL APPLICATIONS

Chemicals
Inks, Paints and Coatings
DI Water
RO Prefiltration
Water Injection
Process Water

Magnetic Media
Petrochemicals
Specialty Chemicals
Prefiltration
Venting
Steam Filtration

Gel Removal
Haze Removal
Sediment Removal
Clarification

QUALITY MANAGEMENT

Quality is of paramount importance to Parker. Many of our products are manufactured under controlled environmental conditions and are subjected to demanding programs of quality assurance.

The Parker domnick hunter Division is ISO 9001 & ISO 14001 Certified.

Industrial Filtration

A Core Expertise

Parker Industrial Process Filtration serves a vast range of applications such as inks, paints and coatings, industrial chemicals, petrochemicals, petroleum, as well as water treatment. Our top-performing products are backed by a global network of factory-trained distributors and technical support teams.

Through our Technical, R&D and Customer Service Teams, we offer a wide range of services and solutions to ensure total customer satisfaction.

TECHNICAL CAPABILITIES

Our Technical Support Group (TSG) is dedicated to the needs of industrial filtration users worldwide. We have an extensive range of state-of-the art analytical instrumentation and a highly qualified team of scientists and engineers generating innovative solutions to a wide variety of filtration needs. We strive to optimize our customers' filtration applications by offering full technical support that includes:

- Process failure analyses
- Contamination analyses
- Process & cost improvement audits
- On-site testing services

RESEARCH AND DEVELOPMENT

Our R&D teams are constantly working to innovate new products through Parker's stage gate process called Winovation to discover technologies that will enhance the performance of process filtration, and keep us at the forefront of process filtration technology.

Winovation

CUSTOMER SERVICE

An experienced team of professionals dedicated to respond quickly and comprehensively to orders – for both standard and customized products – and ensure their on-time delivery worldwide.

Toll free sales & technical support:

940.325.2575

industrialprocess.na@parker.com

www.parker.com/industrialprocess

Parker

Pleated Membrane Filter Cartridges

Clariflow®-G (General Grade) Pleated Membrane Filter Cartridge
Hydrophilic polyethersulfone (PES) membrane for aqueous liquid filtration applications

Evadur Pleated Membrane Filter Cartridge
High-flow, high-purity membrane

Fluoroflow® Pleated Membrane Filter Cartridge
All-fluoropolymer cartridge for filtration of aggressive chemicals

Proflow™ II-G (General Grade) Pleated Membrane Filter Cartridge
Hydrophobic PTFE membrane for gas and solvent purification

Parker

www.parker.com/industrialprocess

Toll free sales & technical support:
940.325.2575

industrialprocess.na@parker.com

Clariflow®-G (General Grade) Filter Cartridges

Hydrophilic polyethersulfone (PES) membrane for aqueous liquid filtration applications

Clariflow®-G general grade cartridges are designed for general-purpose use in the filtration of high-purity liquids and aqueous chemicals.

The mirrored-anisotropic Polyethersulfone (PES) membrane is inherently hydrophilic and has a pore morphology that delivers exceptionally high flow rates.

Because there are no added surfactants or wetting agents, and the support layers and structure are all-polypropylene, the filter exhibits low extractables, broad chemical compatibility and good resistance to hydrolysis.

The Clariflow General Grade Cartridge is available in absolute ratings of 0.04, 0.1, 0.2, 0.45, 0.65 and 0.8µm pore sizes.

Contact Information

Parker Hannifin Corporation
Bioscience Division - N.A.
2340 Eastman Avenue
Oxnard, CA 93030

phone +1 805 604 3583
bioscience.na@parker.com

www.parker.com/bioscience

Benefits

- High flow rate reduces processing time
- Broad chemical compatibility allows use in most applications
- Low differential pressure reduces system wear and tear
- ISO 9001 registered company

Applications

- Chemical filtration
- Liquid clarification
- Recirculating fluids
- General use water filtration
- Deionized water systems

ENGINEERING YOUR SUCCESS.

Clariflow®-G (General Grade) Filter Cartridges

SPECIFICATIONS

Materials of Construction

Membrane: Polyethersulfone
Support layers: Polypropylene
Structure: Polypropylene

All components are thermally bonded to ensure integrity and to reduce extractables.

Effective Filtration Area

6.8ft² ± 0.3ft² / 0.63m² ± 0.0279m²
per 10" (250mm) cartridge

Maximum Differential Pressure/ Temperature

Forward: 80psid (5.5bar) @ 75ºF (24ºC)
40psid (2.8bar) @ 180ºF (82ºC)

Reverse: 50psid (3.4bar) @ 75ºF (24ºC)

Maximum Operating Temperature

160ºF (71ºC)

Performance Attributes

Water flow rates, Typical*		
Micron	**gpm/psid**	**lpm/100mbar**
0.04	1.0	5.29
0.10	1.8	9.88
0.20	3.7	20
0.45	4.8	26
0.65	9.2	51
0.80	9.5	52

* Per 10-inch (250mm) cartridge equivalent with viscosity of 1cP.

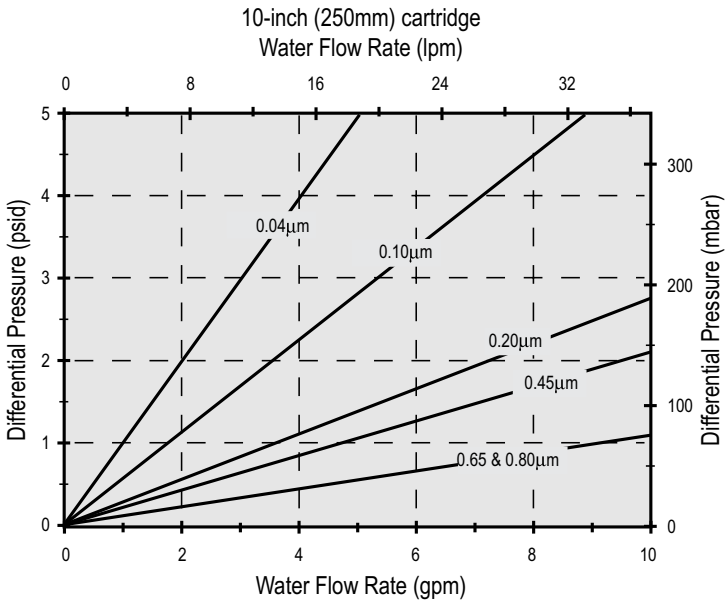

Ordering Information

25 — 10 [ ] [ ] [ ] [ ] — [ ] — G

End Fitting	
Code	**Description**
0	DOE (Cuno®)
1	DOE
2	226/Flat
3	222/Flat
6	020/Internal/Flat
7	226/Fin
8	222/Fin

Nominal Length		
Code	**Inches**	**mm**
10	10	250
20	20	500
30	30	750
40	40	1000

Filter Rating	
Code	**Micron**
924	0.04
001	0.10
002	0.20
004	0.45
006	0.65
008	0.85

Gasket/O-Rings	
Code	**Material**
0	Buna-N
1	EPDM
2	Silicone
4	Viton®
5*	FEP-Encapsulated Viton®
6*	FEP-Encapsulated Silicone
N	None

*O-Ring only

Gasket		
Code	**Thickness**	
	Inches	**mm**
1	0.200	5
2	0.125	3
4	(1) 0.200	5
	(1) 0.125	3
N	No Gasket	

Specifications are subject to change without notification.
For User Responsibility Statement, see www.parker.com/safety

© 2017 Parker-Hannifin Corporation
Bioscience Division - North America
All Rights Reserved

Clariflow is a registered trademark of Parker-Hannifin Corporation
Viton is a registered trademark of E.I. DuPont de Nemours & Co., Inc.
Cuno is a registered trademark of Cuno Inc.

DS_IP_Clariflow-G Rev. C

Evadur™ Filter Cartridges

High flow, high purity membrane cartridge (General Grade)

Evadur™ is a high purity polyethersulfone membrane cartridge designed specifically for demanding water and chemical filtration applications. Evadur offers a unique pleat design and rugged construction for superior retention and filter life. The hydrophilic polyethersulfone membrane resists a wide variety of chemicals. Evadur achieves very high flow rates while maintaining a very low differential pressure. Evadur has also been designed to have extremely fast "flush-up" or clean up times. Rely on Evadur for your high flow, high purity membrane applications.

Contact Information

Parker Hannifin Corporation
Bioscience Division - N.A.
2340 Eastman Avenue
Oxnard, CA 93030

phone +1 805 604 3583
bioscience.na@parker.com

www.parker.com/bioscience

Benefits

- High bacterial retention
- Complete product offering from 0.03 to 0.65 microns
- High-purity polypropylene support structures
- Thermally bonded to exclude liquid capture and extractables
- All materials of construction are FDA listed as acceptable for potable and edible liquid contact according to CFR Title 21
- Manufactured in a clean room environment
- Manufactured with quality control that measures integrity testing
- ISO 9001 registered company

Applications

- Pre and post RO filtration
- Point-of-use filtration
- Bottled water
- Specialty chemical

ENGINEERING YOUR SUCCESS.

Evadur™ Filter Cartridges

SPECIFICATIONS

Materials of Construction

Membrane:
Hydrophilic polyethersulfone

Membrane Support/Drainage:
Polypropylene

Structural components:
Polypropylene

Seal Material:
Various

Sealing Method:
Thermal welding

Dimensions:
Diameter: 2.7 in. (6.8 cm)
Lengths: 10-40 in. (25-102 cm)

Recommended Operating Conditions:

Maximum Temperature: 176°F (80°C) @ 30 ΔP (2.1 bar)

Maximum Differential Pressure

Forward:
70 psi (4.8 bar) @ 77°F (25°C)
30 psi (2.1 bar) @ 176°F (80°C)
Reverse:
50 psi (3.4 bar) @ 77°F (25°C)

Sterilization/Sanitization Methods

- Isopropyl Alcohol
- Sodium Hydroxide
- Hydrogen Peroxide
- Hot Water: 190°F (88°C) @ 5 psid (0.3 bar)
- Autoclave: 250°F (121°C) for 30 minutes at 15 psi (1.0 bar)
- In Situ Steam: 284°F (140°C) for 60 minutes at 15 psi (1.0 bar)
- Chlorine
- Sodium Hypochlorite
- Sanitizing Agents (refer to most recent Compatibility Guide for details)

Installation Rinse-In

Cartridges typically rinse to back ground resistivity in less than six minutes at 3.5 gpm/10" equivalent

Evadur flow rate vs. ΔP for 1 cps liquid @ 73°F (23°C)

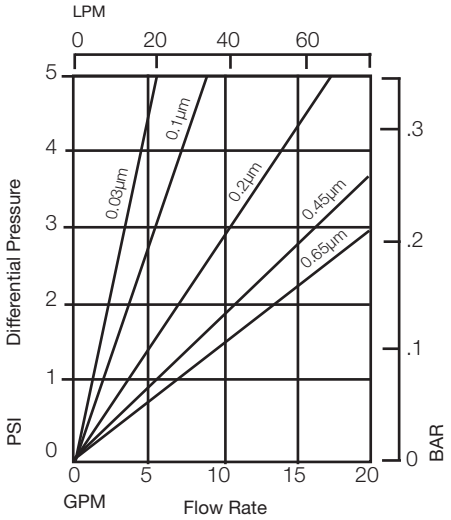

Ordering Information

EV | [ ] | **B** | [ ] | [ ] | [ ] | [ ]

Cartridge Code	
Code	Description
EV	Evadur

Pore Size	
Code	Micron
T	0.03
S	0.1
F	0.2
R	0.45
H	0.65

Diameter	
Code	Inches
B	2.7

Length	
Code	Inches
10	10
20	20
30	30
40	40

Seal Material	
Code	Material
E	EPR
B	Buna-N
S	Silicone
T	PFA Encapsulated Viton® (O-ring only)
V	Viton® (O-ring only)
X	No seal material

End Cap Configuration	
Code	Description
HH	Double Open End
DX	DOE w/extender
SC	226 O-ring/Flat Cap
SF	226 O-ring/Fin
TC	222 O-ring/Flat Cap
TF	222 O-ring/Fin
LL	120 O-ring (both ends)
LR	120 O-ring/Recessed End
PR	213 O-ring/Recessed
AR	020 O-ring/Recessed

Specifications are subject to change without notification.
For User Responsibility Statement, see www.parker.com/safety

© 2017 Parker-Hannifin Corporation
Bioscience Division - North America
All Rights Reserved

Viton is a registered trademark of E.I. DuPont de Nemours & Co., Inc.

DS_IP_Evadur Rev. B

Fluoroflow® Filter Cartridge

All-fluoropolymer cartridge for filtration of aggressive chemicals in industrial applications

Fluoroflow® pleated filter cartridges feature an all-fluoropolymer construction; this provides the highest chemical resistance when filtering acids, bases and solvents. Fluoroflow cartridges fit standard filter housings and are available in a variety of filter ratings, lengths and end-fittings for maximum versatility. Fluoroflow cartridges are available flushed with UPW to minimize extractables and wet-packed to eliminate the need for on-site wetting, to fit your needs.

The Fluoroflow cartridge is available in 0.05, 0.1, 0.2, 0.45, 1 and 100µm pore sizes.

Contact Information

Parker Hannifin Corporation
Bioscience Division - N.A.
2340 Eastman Avenue
Oxnard, CA 93030

phone +1 805 604 3583
bioscience.na@parker.com

www.parker.com/bioscience

Benefits

- High chemical compatibility maximizes process capability
- Wet-packed option eliminates lengthy wetting procedure and minimizes equipment downtime
- ISO 9001 registered company

Applications

- Aggressive chemicals and process fluids at temperatures up to 150°C
- Ozonated and/or hot UPW
- High-purity chemical and solvent manufacturing

ENGINEERING YOUR SUCCESS.

Fluoroflow® Filter Cartridge

SPECIFICATIONS

Materials of Construction
100% Fluoropolymer construction

Effective Filtration Area
6.8ft² (0.63m²) per nominal 10" (250mm) cartridge

Metals Extractables*

Standard: <20ppb (total)
*In a 10% HNO_3 extraction

Maximum Differential Pressure/Temperature

Forward:
80psid (5.5bar) @ 75°F (24°C)
55psid (3.8bar) @ 167°F (75°C)
30psid (2.0bar) @ 257°F (125°C)
15psid (1.0bar) @ 300°F (150°C)

Reverse:
50psid (3.4bar) @ 75°F (24°C)
15psid (1.0bar) @ 250°F (121°C)

Cleanliness (particle shedding)
Wet-packed <2 particles/ml >0.2µm after 7gal @ 1gal/min

TOC/Resistivity Rinse-up (wet-packed)
TOC recovery within 3-5ppb of feed without additional rinse-up.

Resistivity recovery within 0.4megohm-cm of feed after 22gal @ 1gpm.

Performance Attributes

Water flow rates, Typical*		
Micron	**gpm/psid**	**lpm/100mbar**
0.05	0.9	4.9
0.1	2.3	13
0.2	3.2	18
0.45	4.7	26
1.0	6.7	37

*Per 10˝ (250mm) cartridge equivalent.

Integrity Test Values

Filter Rating	Bubble Point*	
Micron	**psig**	**bar**
0.05	≥40	2.8
0.1	≥21	1.5
0.2	≥13	0.9
0.45	≥7	0.5
1.0	≥3	0.2

*In 60/40 IPA/Water @ 25°C

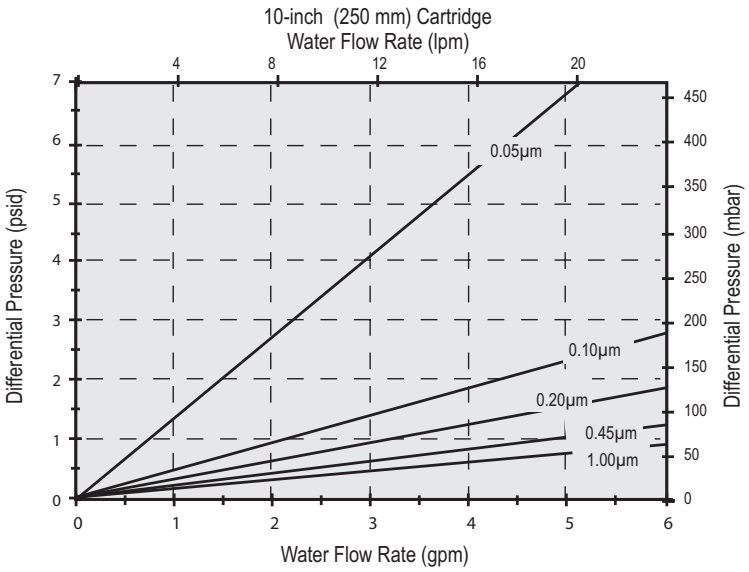

Ordering Information

Each cartridge is identified with a product number, pore size and lot number for traceability.

33 — 14 [ ] [ ] — [ ] — [ ] — E [ ]

End Fitting	
CODE	**DESCRIPTION**
2	226 | Flat
3	222 | Flat
7	226 | Fin
8	222 | Fin

Nominal Length		
CODE	**INCHES**	**mm**
04	4	102
10	10	250
20	20	500
30	30	750
40	40	1000

Filter Rating	
CODE	**MICRON**
925	0.05
001	0.1
002	0.2
004	0.45
010	1.0
503	100 (Nominal)

O-Rings	
CODE	**MATERIAL**
2	Silicone
4	Viton®
5*	FEP-Encapsulated Viton®
6*	FEP-Encapsulated Silicone
7	Chemraz®
N	None

*O-Ring only

Treatment	
CODE	**OPTIONS**
Blank	UPW Flush & Dry
F	Ozone UPW Flush & Dry
W	Wet Packed

Specifications are subject to change without notification.
For User Responsibility Statement, see www.parker.com/safety

© 2017 Parker-Hannifin Corporation
Bioscience Division - North America
All Rights Reserved
Fluoroflow is a registered trademark of Parker-Hannifin Corporation
Viton is a registered trademarks of E.I. DuPont de Nemours & Co., Inc.
Chemraz is a registered trademark of Green, Tweed Companies

DS_IP_Fluoroflow Cartridge Rev. A

Proflow™ II-G (General Grade) Filter Cartridges

Hydrophobic PTFE membrane for general purpose chemical, gas and solvent filtration

Proflow™ II-G (General Grade) filter cartridges provide an economic alternative for general applications where reliable gas and liquid flow rates are required. With 5.6 square feet of expanded PTFE membrane, Proflow II-G is a highly efficient hydrophobicbarrier, for the production of dry gas, and will effectively filter aggressive liquids and organic solvents.

Proflow II-G filter cartridges are manufactured under cleanroom conditions and integrity tested before shipment to assure consistent performance and quality.

The Proflow II-G Cartridges are available in 0.05, 0.1, 0.2, 0.45, and 1.0µm pore sizes.

Contact Information

Parker Hannifin Corporation
Bioscience Division - N.A.
2340 Eastman Avenue
Oxnard, CA 93030

phone +1 805 604 3583
bioscience.na@parker.com

www.parker.com/bioscience

Benefits

- Reliable air and liquid flow rates for effective performance
- Broad chemical compatibility enables use in many applications
- Broad range of micron ratings for user convenience
- Superior hydrophobicity for long life in vent/air applications
- Integrity tested to ensure quality
- ISO 9001 registered company

Applications

- Photoresists
- Compressed gas
- Venting
- Electronic grade solvents
- Hot deionized water (less than 80°C)

ENGINEERING YOUR SUCCESS.

Proflow™ II -G Filter Cartridge

SPECIFICATIONS

Materials of Construction

Membrane: PTFE
Support Layers: Polypropylene
Structure: Polypropylene

Effective Filtration Area

5.6ft^2 (0.52m^2) per 10" (250mm) cartridge

Maximum Differential Pressure/Temperature

Forward:
80psid (5.5bar) @ 75ºF (24ºC)
40psid (2.8bar) @ 180ºF (82ºC)

Reverse:
50psid (3.4bar) @ 75ºF (24ºC)

Cleanliness (particle shedding)

Wet-packed <1 particles/ml >0.2µm after 6gal @ 1gpm.

Data is from open bag and installed, no additional installation flushing.

TOC/Resistivity Rinse-up (wet-packed)

TOC rinse-up to background plus 5 ppb of feed after 70gal@1gpm.

Resistivity rinse-up to background minus 0.2 megohm-cm of feed after 30gal@1gpm.

Performance Attributes

Water flow rates, Typical*		
Micron	gpm/psid	lpm/100mbar
0.05	0.6	3.29
0.1	1.2	6.59
0.2	2.5	14
0.45	5.1	28
1.0	6.2	34

* Per 10-inch (250mm) cartridge equivalent with viscosity of 1cP.

Integrity Test Values

Filter Rating	Bubble Point*	
Micron	psig	bar
0.05	≥40	2.8
0.10	≥21	1.5
0.20	≥13	0.9

* In 60/40 IPA/water @ 25°C

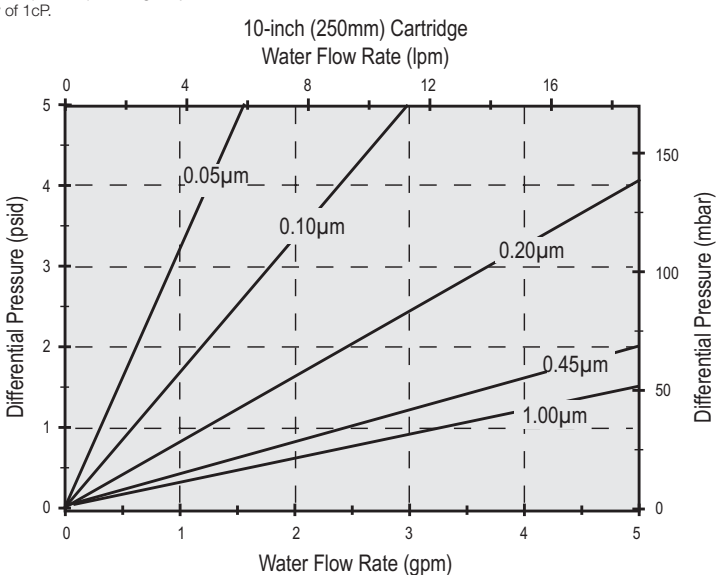

Ordering Information

Each cartridge is identified with a product number, pore size and lot number for traceability.

3 – [ ] [ ] 0 [ ] [ ] [ ] – [ ] [ ] [ ] – [ ] [ ] G

Treatment	
Code	Options
4	Standard
6	Flushed with 18 Megohm DI Water

Styles	
Code	Description
1	No Insert (Std.)
5	Encapsulated Stainless Steel
6	Encapsulated Polysulfone
A	½" Shortened on 222 Fitting

End Fitting	
Code	Description
0	DOE (Cuno®)
1	DOE
2	226 | Flat
3	222 | Flat
6	020 | Internal | Flat
7	226 | Fin
8	222 | Fin
G	120 | Internal | Recessed End cap
H	213 | Recessed End cap (Ametek)
R	222/Recessed End cap

Nominal Length		
Code	Inches	mm
10	10	250
20	20	500
30	30	750
40	40	1000

Filter Rating	
Code	Micron
925	0.05
001	0.1
002	0.2
004	0.45
010	1.0

Gasket/O-Rings	
Code	Material
0	Buna-N
1	EPDM
2	Silicone
4	Viton®
5*	FEP Encapsulated Viton®
6*	FEP Encapsulated Silicone
N	None

*O-Rings only

Gaskets Only		
Code	Thickness	
	Inches	mm
1	0.200	5
2	0.125	3
4	(1) 0.200	5
	(1) 0.125	3
N	No Gasket	

Specifications are subject to change without notification.
For User Responsibility Statement, see www.parker.com/safety

© 2017 Parker-Hannifin Corporation
Bioscience Division - North America
All Rights Reserved

Viton is a registered trademark of E.I. DuPont de Nemours & Co., Inc.
Proflow is a registered trademark of Parker-Hannifin Corporation

DS_IP_Proflow II Rev. A

Pleated Depth Filter Cartridges

Fulflo® Abso-Mate™
Filter Cartridge
All polypropylene, absolute-rated, cost-effective filtration

Claripor™ Filter Cartridge
Polypropylene pleated depth media for critical process applications

Flo-Pac®
Filter Cartridge
Pleated cartridges for superior industrial filtration

Flo-Pac® +
Filter Cartridge
Construction for organic solvent filtration

Glass-Mate™ Filter Cartridge
Absolute-rated and economical filtration with pleated microglass

Fulflo® 1401 Pleated
Filter Cartridge
Pleated cartridge for high-efficiency, high-pressure, dirt-holding capacity & flow rate

Fulflo® PCC Filter Cartridge
Unique construction improves particle retention, service-life and flow rates

Fulflo® Poly-Mate™
Filter Cartridge
Quality, economical filtration for critical process applications

Fulflo® Poly-Mate™ Plus
Filter Cartridge
High surface area and high efficiency all-polypropylene pleated cartridges

Toll free sales & technical support:
940.325.2575
industrialprocess.na@parker.com

Fulflo® Abso-Mate™ Pleated Depth Filter Cartridges

All polypropylene, absolute-rated, cost-effective filtration

Parker's Fulflo® Abso-Mate™ Cartridges provide the ultimate in economical filtration for even the most critical process fluids. The proprietary melt blown media is rigidly controlled for reliable results time after time. Abso-Mate cartridges are produced without adhesives that can potentially contaminate fluids.

Abso-Mate Pleated Cartridges are available in 0.2µm, 0.45µm, 1µm, 2µm, 5µm, 10µm, 20µm, 40µm, and 70µm absolute rated pore sizes.

Contact Information

Parker Hannifin Corporation
Bioscience Division - N.A.
2340 Eastman Avenue
Oxnard, CA 93030

phone +1 805 604 3583
bioscience.na@parker.com

www.parker.com/bioscience

Benefits

- Absolute ratings for consistent and reliable performance (99.98%; ß = 5000)
- Back-washable media, reduces replacement maintenance and cartridge disposal costs
- Abso-Mate cartridges are non-fiber releasing and contain minimal extractables
- All materials of construction are FDA listed as acceptable for potable and edible liquid contact according to CFR Title 21
- One-piece construction eliminates bypass concerns on multi-length cartridges
- All-polypropylene construction offers wide chemical compatibility with most chemicals, acids, bases and solvents
- Fused construction and continuous lengths eliminate the need for adhesives and allow accurate bubble point integrity testing
- ISO 9001 registered company

Applications

- Membrane Prefilter
- Chemicals
- Catalyst Recovery
- Precious Metal Recovery
- Waste Water

ENGINEERING YOUR SUCCESS.

Abso-Mate® Cartridges

SPECIFICATIONS

Materials of Construction

Type of Construction
- Integrally sealed, all-polypropylene pleated media supported by all-polypropylene construction

Filter Media
- Melt blown polypropylene microfiber

Media Support Layers
- Non-woven or mesh polypropylene

Media Support Core
- Heavy wall high strength polypropylene

Media Support Cage and Thermally Welded End Caps
- Molded polypropylene

Seal Materials
- Buna-N, EPR, Silicone, Viton®, PFA Encapsulated Viton®

Dimensions

Cartridge Outside Diameter
- 2 11/16 in.

Cartridge Inside Diameter
- DOE: 1 1/16 in.
- SOE: 1 5/32 in.

Maximum Recommended Operating Conditions

Temperature: 200°F (93°C)

Change Out ΔP: 35psi (2.4bar)

ΔP @ Ambient 70°F (21°C): 90psi (6bar)

ΔP @ 200°F (93°C): 20psi (1.4bar)

Flow Rate: 10gpm (38 lpm) per 10 in. length

Product Safety
- All components FDA listed per CFR, Title 21
- Non-fiber releasing per FDA Part 210.3B (5) and (6)
- Non-photo sensitive

Filtration Ratings

99.98% efficiency at 0.2, 0.45, 1, 2, 5, 10, 20, 40, & 70 µm pore sizes

$$\text{Beta Ratio } (\beta) = \frac{\text{Upstream Particle Count @ Specified Particle Size and Larger}}{\text{Downstream Particle Count @ Specified Particle Size and Larger}}$$

$$\text{Percent Removal Efficiency} = \left(\frac{\beta-1}{\beta}\right) 100$$

Performance determined per ASTM F-795-88. Single-Pass Test using AC test dust in water at a flow rate of 3.5gpm per 10 in. (13.2 lpm per 254 mm) cartridge.

Performance Attributes

Flow Rate and Pressure Drop Formulas

$$\text{Flow Rate (gpm)} = \frac{\text{Clean } \Delta P \times \text{Length Factor}}{\text{Viscosity} \times \text{Flow Factor}}$$

$$\text{Clean } \Delta P = \frac{\text{Flow Rate} \times \text{Viscosity} \times \text{Flow Factor}}{\text{Length Factor}}$$

Notes:
1. Clean ΔP is psi differential at start.
2. Viscosity is centistokes. Use Conversion Tables for other units.
3. Flow Factor is psid/gpm at 1cks for 10 in. (or single).
4. Length Factors convert flow or ΔP from 10 in. (single length) to required cartridge length.

Liquid Particle Retention Ratings (µm) @ Removal Efficiency of:

Cart.	ß=5000 Absolute	ß=1000 99.9%	ß=100 99%	ß=50 98%	ß=20 95%
PAB002	0.2	<0.2	<0.2	<0.2	<0.1
PAB004	0.45	0.4	0.2	<0.2	<0.1
PAB010	1	0.8	0.4	<0.2	<0.1
PAB020	2	1.9	0.8	<0.2	<0.1
PAB050	5	3.8	1.4	0.4	0.15
PAB100	10	7	2	0.5	0.25
PAB200	20	13	4	1.8	0.35
PAB400	40	22	7	3.2	0.8
PAB700	70	52	22	15	5.5

Abso-Mate Flow Factors (psid/gpm @ 1 cks)

Rating (µm)	Flow Factor
0.20	3.100
0.45	1.000
1	0.750
2	0.300
5	0.072
10	0.031
20	0.021
40	0.012
70	0.008

Abso-Mate Length Factors

In.	Factor
9	1.0
10	1.0
19	2.0
20	2.0
29	3.0
30	3.0
39	4.0
40	4.0

Ordering Information

PAB [ ] — [ ] [ ] [ ] [ ] [ ] [ ]

Filter Rating	
Code	Micron
002	0.2
004	0.45
010	1
020	2
050	5
100	10
200	20
400	40
700	70

Nominal Length		
Code	Inches	mm
9	9 5/8	244
10	9 13/16	249
19	19 5/8	498
20	19 15/16	506
29	29 1/4	743
30	30 1/16	764
39	39	991
40	40	1016

Support Construction	
Code	Material
F	Glass-filled Polypropylene (core only)
G	304 Stainless Steel (core only)
A	Natural Polypropylene (All support components)

Seal Material	
Code	Material
P	Polyethylene Foam (DOE gasket only)
E	EPR
N	Buna-N
S	Silicone
T[1]	PFA-Encapsulated Viton® (222, 226 & O-ring only)*
V	Viton®
X	No seal material

[1]PFA/Viton is O-ring only, T is expanded PTFE gaskets

End Cap Configuration			
Code	Description	Code	Description
AR	020 O-ring/Recessed cap	SSC	SS inserted 226 O-ring/ Closed
DO	Double open end (DOE)	SSF	SS inserted 226 O-ring/Fin
DX	Double open end/extended core	TC	222 O-ring/Flat
LL[2]	120/120 (Filterlite LMO & Nuclepore Polymeric Vessels)	TF	222 O-ring/Fin
LR[2]	120 O-ring/Recessed (Nuclepore)	STC	SS inserted 222 O-ring/ Closed
OB	Std. open end/Polypropylene spring closed end	STF	SS inserted 222 O-ring/Fin
PR[2]	213 O-ring/Recessed cap (Ametek® & Parker LT Polymeric Vessels)	TX	222 O-ring/Flex Fin
SC	226 O-ring/Flat	XB	Ext. core open end/ Polypropylene spring closed end
SF	226 O-ring/Fin		

[2]Available only in 9 5/8" (-9) and 19 5/8" (-10) lengths

Special Options	
Code	Description
B	Bubble-point test
R	DI water rinse (5 min.)
Z6	Individual Poly bag only

Specifications are subject to change without notification.
For User Responsibility Statement, see www.parker.com/safety

© 2017 Parker-Hannifin Corporation
Bioscience Division - North America
All Rights Reserved

Fulflo is a registered trademark of Parker-Hannifin Corporation
Viton is a registered trademark of E.I. DuPont de Nemours & Co., Inc.
Ametek is a registered trademark of Ametek, Inc.

Claripor™ Pleated Depth Filter Cartridges

Polypropylene pleated depth media for critical process applications

The best of pleated and depth style technologies combine in Parker's Claripor™ pleated depth filter cartridges. The unique layered construction provides absolute retention with high flow rates and excellent gel removal. These features, in addition to Claripor's high contaminant holding capacity and exceptional clarifying ability make it an ideal choice for a wide array of critical process applications.

Claripor cartridges are available with polypropylene media in absolute (99.98%) micron ratings from 0.5 to 90 microns.

Contact Information

Parker Hannifin Corporation
Bioscience Division - N.A.
2340 Eastman Avenue
Oxnard, CA 93030

phone +1 805 604 3583
bioscience.na@parker.com

www.parker.com/bioscience

Benefits

- Pleated construction yields high flow rates compared to traditional depth filters
- Rigid cage design permits superior strength
- Graded density layering for superior removal of amorphous particles
- Available with all industry standard end configurations
- Absolute retention ratings for critical filtration
- All materials of construction are FDA listed as acceptable for potable and edible liquid contact according to CFR Title 21
- Manufactured with strict quality control
- ISO 9001 registered company

Applications

- Critical coatings
- Inkjet inks
- Specialty chemicals

ENGINEERING YOUR SUCCESS.

Claripor™ Filter Cartridges

SPECIFICATIONS

Materials of Construction

Media - Polypropylene

Support/Drainage - Polypropylene

Hardware - Polypropylene

O-Rings (SOE) - EPR, Buna-N, Viton®, Silicone, PFA Encapsulated Viton®

Gaskets (DOE) - EPR, Buna-N, Viton®, Silicone

Recommended Operating Conditions

Flow Rate - 5gpm (18.9 lpm) per 10" equivalent

Change-out Pressure - 35psid (2.4bar)

Retention Ratings (99.98%)

0.5, 1.5, 3, 4.5, 10, 20, 30, 40, 70, 90µm

Maximum Operating Conditions

Maximum Temperature:
176°F (80°C) @ 30psid (2.1bar)

Maximum Differential Pressure:
70psi (4.8bar) @ 77°F (25°C)
30psi (2.1bar) @ 176°F (80°C)

Dimensions (nominal)

Outside Diameter: 2.7" (6.86 cm)
Inside Diameter: 1" (2.54 cm)

Performance Attributes

Flow rate vs. ΔP for a 1cks liquid @ 73°F (23°C)*

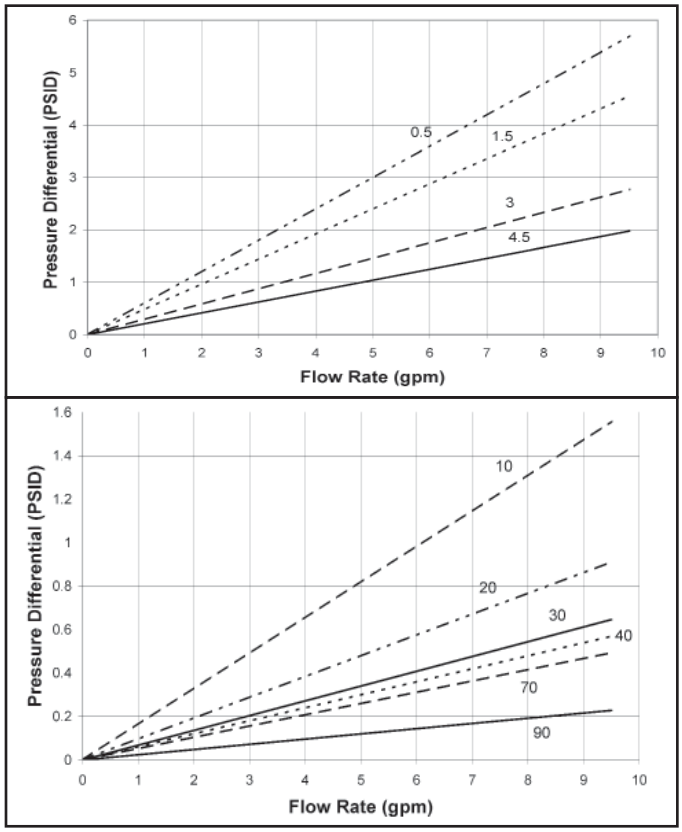

*Consult Division for gas flow data 877-764-2234

Ordering Information

CP [ ] – [ ] [ ] [ ] – [ ]

Cartridge Code	
CP	Claripor

Pore Size	
CODE	MICRON
005	0.5
015	1.5
030	3.0
045	4.5
100	10
200	20
300	30
400	40
700	70
900	90

Nominal Length	
CODE	INCHES (CM)
4	4" (10.16)
5	5" (12.7)
10	10" (25.4)
20	20" (50.8)
30	30" (76.2)
40	40" (101.6)

Core Material	
CODE	MATERIAL
A	Natural Polypropylene
F	Glass-filled polypropylene

Seal Material	
CODE	MATERIAL
E	EPR
N	Buna-N
S	Silicone
T	PFA Encapsulated Viton® (O-rings only, not gaskets)
V	Viton®

End Cap Configuration	
CODE	DESCRIPTION
DO	Double open end (DOE)
DX	Double open end/extended core
TC	222 O-ring/Flat
TF	222 O-ring/Fin
TX	222 O-ring/Flex Fin
SC	226 O-ring/Flat
SF	226 O-ring/Fin
STC	222 O-ring/Flat cap w/SS insert
STF	222 O-ring/Fin cap w/SS insert
SSC	226 O-ring/Flat cap w/SS insert
SSF	226 O-ring/Fin cap w/SS insert

Specifications are subject to change without notification.
For User Responsibility Statement, see www.parker.com/safety

© 2017 Parker-Hannifin Corporation
Bioscience Division - North America
All Rights Reserved

Viton is a registered trademark of E.I. DuPont de Nemours & Co., Inc.

DS_IP_Claripor Rev. A

Flo-Pac® Pleated Depth Filter Cartridges

Pleated cartridges for superior industrial filtration

Parker Fulflo® Flo-Pac® Cartridges are the perfect choice for many industrial filtration requirements. Flo-Pac pleated cartridges contain premium grade, phenolic impregnated cellulosic filter media. Parker's line of pleated cartridges is designed for critical filtration applications, providing long service life, high flow rate and low pressure drop.

Flo-Pac Pleated Cartridges are available in 0.5µm, 1µm, 5µm, 10µm, 20µm, 30µm, and 60µm pore sizes (95% removal; ß = 20).

Contact Information

Parker Hannifin Corporation
Industrial Process Filtration - N.A.
118 Washington Avenue
Mineral Wells, TX 76067

phone +1 940 325 2575
industrialprocess.na@parker.com

www.parker.com/industrialprocess

Benefits

- Pleated cellulosic media allow high flow capacity at low pressure drop
- Available in a variety of sizes and configurations to fit most industrial vessels
- Phenolic resin impregnated to provide strength, integrity and high contaminant capacity
- High strength spiral core withstands pressure surges to 100psid
- Suitable for operating temperatures to 250°F (121°C)
- Outer sleeve protects the media from damage
- ETP (Electro-tin-plated) steel metal components for both aqueous and oil-based applications
- Buna-N gaskets are standard, other materials are available
- ISO 9001 registered company

Applications

- Water Soluble
- Coolants
- Quench Oils
- Fuels
- Lubricating Oils
- Hydraulic Oils
- EDM Dielectrics
- Rolling Mill Oils
- Processing Liquids
- Gasoline

ENGINEERING YOUR SUCCESS.

Flo-Pac® Filter Cartridges

SPECIFICATIONS

Filtration Ratings

95% at 0.5µm, 1µm, 5µm, 10µm, 20µm, 30µm, and 60µm pore sizes

Materials of Construction

Filter Media:
Phenolic impregnated cellulose

Core: ETP steel

End Caps: ETP steel

Sleeve:
300 series - Polypropylene
600 & 700 series - ETP steel

Adhesive: Thermosetting PVC

End Seals:
300 & 700 Series–Buna-N gaskets, 600 Series–Buna-N gaskets/grommets, 500 Series–fiber gaskets

Packaging

300 Series
310–24/carton (12 lb ≈ shipping wt)
320–12/carton (12 lb ≈ shipping wt)
330–12/carton (18 lb ≈ shipping wt)
340–12/carton (24 lb ≈ shipping wt)

500 Series
518–6/carton (14 lb ≈ shipping wt)

600 Series
614–6/carton (20 lb ≈ shipping wt)
629–4/carton (26 lb ≈ shipping wt)
644–4/carton (40 lb ≈ shipping wt)

700 Series
718–6/carton (20 lb ≈ shipping wt)
736–4/carton (26 lb ≈ shipping wt)
754–4/carton (39 lb ≈ shipping wt)

Maximum Recommended Operating Conditions

Temperature: 250°F (121°C)

Differential Pressure: 70psi (4.8bar)

Change Out ΔP: 35psid (2.4bar)

Flow Rate per Single Length Cartridge:

300 Series	7gpm
500 Series	50gpm
600 Series (3 ½ in. ID)	50gpm
600 Series (1 9/16 in. ID)	35gpm
700 Series	50gpm

Dimensions

300 Series
2 ½ in. OD x 1 in. ID x 9 ⅝ in., 19 ¾ in., 29 ¼ in., 29 ⅝ in, 40 in.
500 Series
4 ½ in. OD x 1 ¾ in. ID x 18 in.
600 Series
6 ¼ in. OD x 3 1/12 , or 1 9/16 in. x 14 ⅜, 29 or 43 ⅜ in. long
700 Series
6 ¼ in. OD x 2 ⅝ in. or 2 ⅛ in. ID x 18, 36, or 54 in. long

Flow Rate and Pressure Drop Formulas

$$\text{Flow Rate (gpm)} = \frac{\text{Clean}\Delta P \times \text{Length Factor}}{\text{Viscosity} \times \text{Flow Factor}}$$

$$\text{Clean } \Delta P = \frac{\text{Flow Rate} \times \text{Viscosity} \times \text{Flow Factor}}{\text{Length Factor}}$$

FP Flow Factor (psid/gpm @ 1cks)

Rating (µm)	Flow Factor
0.5	0.0260
1	0.0170
5	0.0020
10	0.0018
20	0.0010
30	0.0009
60	0.0005

FP Length Factors

Style	Length Factor
FP310	1.0
FP320	2.0
FP329	3.0
FP330	3.0
FP340	4.0
FP518	3.3
FP614	3.6
FP629	7.2
FP644	10.8
FP718	6.5
FP736	13.0
FP754	19.5

Liquid Particle Retention Ratings (µm) @ Removal Efficiency of:

Cartridge	ß=5000 Absolute	ß=1000 99.9%	ß=100 99%	ß=20 95%	ß=10 90%
FP-0.5	12	10	3	0.5	<.0.5
FP-1	15	12	6	1	<1.0
FP-5	30	20	9	5	3.5
FP-10	50	35	18	10	7
FP-20	90	70	40	20	12
FP-30	100	85	50	30	21
FP-60	200	150	90	60	45

Notes:
1. Clean ΔP is psi differential at start.
2. Viscosity is centistokes. Use Conversion Tables for other units.
3. Flow Factor is ΔP/GPM at 1cks for 10 in. (or single).
4. Length Factors convert flow or ΔP from 10 in. (single length) to required cartridge length.

Ordering Information

FP [ ] [ ] – [ ] – [ ] [ ] [ ]

Cartridge Code	
FP	Flo-Pac

Outside Diameter		
CODE	INCHES	SERIES
3	2 ½	300
5	4 ½	500
6	6 ¼	600
7	6 ¼	700

Length		
CODE	INCHES	SERIES
10	9 ⅝	300
14	14 ⅜	600
18	18	500, 700
20	19 ¾	300
29	29	600
29	29 ¼	300
30	29 ⅝	300
36	36	700
40	40	300
44	43 ⅜	600
54	54	700

Micron Rating (µm)
0.5
1
5
10
20
30
60

Inside Diameter		
CODE	INCHES	SERIES
None	1" (300)	300
None	1 ¾" (500)	500
None	3 ½" (600)	600
None	2 ⅝" (700)	700
1	1 9/16" (600)	600
8	2 ⅛" (700)	700

Seal Material	
CODE	DESCRIPTION
None	Buna-N Gaskets
A	Vellumoid (300, 600, 700 Series)
B	Fiber (500 Series Only)
C	Cork (700 Series Only)
G	Buna-N Grommets (600 Series 1 9/16" ID)
V	Viton®

Body	
CODE	DESCRIPTION
None	Metal (500, 600, 700 Series)
	Polypro (300 Series)
M	Metal (300 Series)
N	No Body

Specifications are subject to change without notification.
For User Responsibility Statement, see www.parker.com/safety

© 2017 Parker-Hannifin Corporation
Industrial Process Filtration - North America
All Rights Reserved

Fulflo is a registered trademark of Parker-Hannifin Corporation
Viton is a registered trademark of E.I. DuPont de Nemours & Co., Inc.

Flo-Pac® + Pleated Depth Filter Cartridges

Construction for organic solvent filtration

Parker Fulflo® Flo-Pac®+ pleated cartridges are the filters of choice for many industrial filtration requirements. These cartridges are manufactured with premium grade, phenolic impregnated cellulosic filter media for long service life, high flow rate and low pressure drop. Unique epoxy resin bonding of end caps, pleat side seal and gaskets provides excellent resistance to most organic solvents.

Flo-Pac+ pleated cartridges are available in 0.5µm, 1µm, 5µm, 10µm, 20µm, 30µm, & 60µm pore sizes (95% removal; ß = 20).

Contact Information

Parker Hannifin Corporation
Industrial Process Filtration - N.A.
118 Washington Avenue
Mineral Wells, TX 76067

phone +1 940 325 2575
industrialprocess.na@parker.com

www.parker.com/industrialprocess

Benefits

- Epoxy bonding of end caps, pleat side seal and gaskets provides resistance to most organic solvents
- Premium pleated cellulosic media allow high flow capacity at low pressure drop
- Available in a variety of sizes & configurations to fit most industrial vessels
- Impregnated phenolic resin provides strength, integrity and high contaminant capacity
- Suitable for operating temps. to 250°F (121°C)
- Perforated outer metal sleeve protects media against damage
- ETP (Electro-tin-plated) steel metal components for aqueous and oil-based applications
- Gaskets provide positive seals and are available in Viton,* cork and standard Vellumoid
- Recommended range is pH 4-10. (Please call for specific recommendation)
- Spiral core withstands pressure surges to 100psid
- ISO 9001 registered company

Applications

- Aromatic Hydrocarbons (toluene, xylene, benzene)
- Ketones (acetone, isophorone, methylethyl ketone)
- Ethers (THF, dioxane)
- Amines (DEA, TEA, DMEA)
- Glycols (ethyl acetate, cellosolve acetate)
- Aliphatic Hydrocarbons (hexane, pentane, naphtha)
- Halogenated Hydrocarbons (methylene chloride, perchloroethylene)
- Esters (EG, PEG, DEG)

ENGINEERING YOUR SUCCESS.

Flo-Pac® + Filter Cartridges

SPECIFICATIONS

Materials of Construction

Filter Media
Phenolic impregnated cellulose

Core - ETP steel

End Caps - ETP steel

Sleeve - ETP steel

Adhesive - Epoxy

End Seals
Vellumoid (standard), Viton®, cork

Maximum Recommended Operating Conditions

Temperature: 250°F (121°C)

Change Out ΔP: 35psi (2.4bar)

Flow Rate per Single Length Cartridge:

300 Series	7gpm
600 Series (3 ½ in ID)	50gpm
600 Series (1 9/16 in ID)	35gpm
700 Series	50gpm

Differential Pressure: 70psi (4.8bar)

Dimensions

300 Series
2½ in OD x 1 in ID x 9 ⅝ in, 19 ¾ in, 29 ¼ in, 29 ⅝ in and 40 in long

600 Series
6 ¼ in. OD x 3 ½ in. ID or 1 9/16 in. ID x 14 ⅜ in. long or 29 in. long

700 Series
6 ¼ in OD x 2 ⅝ in or 2 ⅛ in ID x 18 in or 36 in long

Packaging

300 Series
310–24/carton (12 lb ≈ shipping wt)
320–12/carton (12 lb ≈ shipping wt)
330–12/carton (18 lb ≈ shipping wt)
340–12/carton (24 lb ≈ shipping wt)

600 Series
614–6/carton (20 lb ≈ shipping wt)
629–6/carton (40 lb ≈ shipping wt)

700 Series
718–6/carton (20 lb ≈ shipping wt)
736–4/carton (26 lb ≈ shipping wt)

Filtration Ratings

95% at 0.5µm, 1µm, 5µm,10µm, 20µm, 30µm, and 60µm pore sizes

Flow Rate and Pressure Drop Formulas

$$\text{Flow Rate (gpm)} = \frac{\text{Clean}\Delta P \times \text{Length Factor}}{\text{Viscosity} \times \text{Flow Factor}}$$

$$\text{Clean } \Delta P = \frac{\text{Flow Rate} \times \text{Viscosity} \times \text{Flow Factor}}{\text{Length Factor}}$$

FP+ Flow Factor (psid/gpm @ 1 cks)

Rating (µm)	Flow Factor
0.5	0.0260
1	0.0170
5	0.0020
10	0.0018
20	0.0010
30	0.0009
60	0.0005

FP+ Length Factors

Style	Length Factor
FP310	1.0
FP320	2.0
FP329	3.0
FP330	3.0
FP340	4.0
FP614	3.6
FP629	7.2
FP718	6.5
FP736	13.0

Liquid Particle Retention Ratings (µm) @ Removal Efficiency of:

Cartridge	ß=5000 Absolute	ß=1000 99.9%	ß=100 99%	ß=20 95%
FPE-0.5	12	10	3	0.5
FPE-1	15	12	6	1
FPE-5	30	20	9	5
FPE-10	50	35	18	10
FPE-20	90	70	40	20
FPE-30	100	85	50	30
FPE-60	200	150	90	60

Notes:
1. Clean ΔP is psi differential at start.
2. Viscosity is centistokes. Use Conversion Tables for other units.
3. Flow Factor is ΔP/GPM at 1cks for 10 in. (or single).
4. Length Factors convert flow or ΔP from 10 in. (single length) to required cartridge length.

Ordering Information

FPE [ ] [ ] – [ ] – [ ] [ ] [ ]

Cartridge Code
Flo-Pac +

Outside Diameter		
CODE	INCHES	SERIES
3	2 ½	300
6	6 ¼	600
7	6 ¼	700

Length		
CODE	INCHES	SERIES
10	9 ⅝	300
14	14 ⅜	600
18	18	700
20	19 ¾	300
29	29	600
29	29 ¼	300
30	29 ⅝	300
36	36	700
40	40	300
44	43 ½	600
54	54	700

Micron Rating (µm)
0.5
1
5
10
20
30
60

Inside Diameter		
CODE	INCHES	SERIES
None	1	300
None	3 ½	600
None	2 ⅝	700
1	1 9/16	600
8	2 ⅛	700

Seal Material	
CODE	DESCRIPTION
A	Vellumoid (300, 600, 700 Series)
C	Cork (700 Series Only)
N	Buna-N
V	Viton®

Body	
CODE	DESCRIPTION
None	Louvered Metal Body (300, 600, 700)
EX	Expanded Metal (600, 700)

Specifications are subject to change without notification.
For User Responsibility Statement, see www.parker.com/safety

© 2017 Parker-Hannifin Corporation
Industrial Process Filtration - North America
All Rights Reserved

Fulflo is a registered trademark of Parker-Hannifin Corporation
Viton is a registered trademark of E.I. DuPont de Nemours & Co., Inc.

Glass-Mate™ Cartridges

Absolute-rated and economical filtration with pleated microglass

Glass-Mate™ cartridges offer an economical choice for absolute-rated efficiency, high flow rate capability and long service life. A wide variety of construction components, end fittings and seal options make this product line ideal for pre-filtration and point-of-use filtration for many industrial applications.

Glass-Mate cartridges are available in 0.2, 0.45, 1.0, 2.0, 3.0, 5.0, 10, 20 and 40µm absolute-rated pore sizes.

Contact Information

Parker Hannifin Corporation
Industrial Process Filtration - N.A.
118 Washington Avenue
Mineral Wells, TX 76067

phone +1 940 325 2575
industrialprocess.na@parker.com

www.parker.com/industrialprocess

Benefits

- Absolute-rated media provides reliable removal efficiency
- Thermal bonding eliminates particle bypass
- Laminated media/support layer maximizes flow capacity and media utilization and minimizes media migration
- Variety of construction/seal options for increased compatibility
- End fitting options provide competitive housing retrofit capability
- All materials of construction are FDA listed as acceptable for potable and edible liquid contact according to CFR Title 21 *(except 200 & 400 micron)*
- High surface area yields high flow rate, low differential pressure
- Non-fiber-releasing media with minimal extractables provides high- purity filtrate
- ISO 9001 registered company

Applications

- Chemicals
- Coatings
- Water
- R.O. Pre-filtration

ENGINEERING YOUR SUCCESS.

Glass-Mate™ Cartridges

SPECIFICATIONS

Effective Filtration Area

5 ft²/10 in. (0.46 m²/254 mm) minimum

Materials of Construction

Filter Medium:
Borosilicate microfiberglass w/ acrylic binder

Support/Drainage Layers:
Spunbonded polyester; laminated on the downstream side

Recommended Operating Conditions

Maximum Temperature
Glass Filled Polypropylene:
200°F @ 35ΔP (93°C/2.4bar)
Polyester:
140°F @ 35ΔP (60°C/2.4bar)
Stainless Steel:
275°F @ 35ΔP (135°C/2.4bar)

Change-out Differential Pressure
35psi (2.4bar)

Maximum Flow Rate
10gpm per 10 in. length (38 lpm/254 mm)

Design Flow Rate
5gpm per 10 in. length (9.5 lpm/254 mm)

Maximum Differential Pressure
Glass-Filled Polypropylene:
90psi @ 75°F (6.2bar/24°C)

Polyester:
70psi @ 75°F (4.8bar/24°C)

Stainless Steel:
75psi @ 275°F (5.1bar/135°C)

Biological Safety/Product Purity

- All components FDA listed per CFR, Title 21 *(except 20 & 40 micron)*
- Non-fiber releasing per FDA

Sterilization/Sanitization

Hot water ("F" construction): 180°F (82°C) for 30 minutes at maximum 15psid (1bar).

In-Line Steam/Autoclave ("F" construction with stainless steel sleeve): 60 minutes at 255°F (140°C) at 2psid (0.14bar) maximum pressure.

Flow Rate and Pressure Drop Formulas

Flow Rate (gpm):
$$\frac{\text{Clean } \Delta P \times \text{Length Factor}}{\text{Viscosity} \times \text{Flow Factor}}$$

Clean ΔP:
$$\frac{\text{Flow Rate} \times \text{Viscosity} \times \text{Flow Factor}}{\text{Length Factor}}$$

Notes:
1. Clean ΔP is psi differential at start.
2. Viscosity is centistokes. Use Conversion Tables for other units.
3. Flow Factor is ΔP/GPM at 1cks for 10 in. (or single).
4. Length Factors convert flow or ΔP from 10 in. (single length) to required cartridge length.

Glass-Mate Flow Factor (psid/gpm @ 1cks)

Rating (µm)	Flow Factor
0.2	0.115
0.45	.108
1.0	.102
2.0	.095
3.0	.090
5.0	.072
10	.060
20	.042
40	.018

Flow Rate Capability Glass-Mate Length Factor

Length (in.)	Length Factor
9	1.0
10	1.0
19	2.0
20	2.0
29	3.0
30	3.0
39	4.0
40	4.0

Liquid Particle Retention Ratings (µm) @ Removal Efficiency of:

Cart.	ß=5000 Absolute	ß=1000 99.8%	ß=100 99%	ß=20 95%	ß=10 90%
PMG002	0.2	0.15	<0.1	<0.1	<0.1
PMG004	0.45	0.3	<0.1	<0.1	<0.1
PMG010	1.0	0.6	0.2	<0.1	<0.1
PMG020	2.0	1.2	0.4	0.2	0.1
PMG030	3.0	1.8	0.6	0.3	0.2
PMG050	5.0	3	1.3	0.5	0.4
PMG100	10	7	3.5	1.6	1.2
PMG200	20	16	8	4	2.5
PMG400	40	32	20	11	8

Ordering Information

PMG [ ] — [ ] [ ] [ ] [ ] — [ ] [ ]

Particle Removal Rating

CODE	MICRON
002	0.2
004	0.45
010	1.0
020	2.0
030	3.0
050	5.0
100	10
200*	20
400*	40

*Non-FDA (add '-N' to end of part#)

Nominal Length

CODE	INCHES	mm
9	9 5/8"	244
10	9 13/16"	249
19	19 5/8"	498
20	19 15/16"	506
29	29 1/4"	743
30	30 1/16"	764
39	39"	991
40	40"	1016

Support Construction

CODE	MATERIAL
F	Glass-filled polypropylene core & pure polypropylene extruded outer cage
G[1]	304 Stainless Steel core with polyester outer netting
P	Polyester core, end caps & outer netting
S	316 Stainless Steel

[1]Stainless steel end caps incl. only on DO option

Seal Material

CODE	MATERIAL
P	Polyethylene Foam (DOE gasket only)
E	EPR
N	Buna-N
S	Silicone
T[2]	PFA Encapsulated Viton® (222, 226 O-ring only)
V	Viton®
X	No seal material

[2]PFA/Viton is O-ring only; for DOE

End Cap Configuration

CODE	DESCRIPTION	CODE	DESCRIPTION
AR	020 O-ring/ Recessed cap	TB	
DO	Double open end (DOE)	TC	222 O-ring/Flat Cap
DX	Double open end/ extended core	TF	222 O-ring/Fin
LL[3]	120 O-ring/ Recessed Cap	TX	222 O-ring/Flex Fin
LR	120 O-ring/Recessed[3]	XB	Ext. core open end/ Polypropylene spring closed end
OB	Std. open end/ Polypropylene spring closed end	SSC	SS inserted 226 O-ring/Closed
PR	213 O-ring/ Recessed cap[3]	SSF	SS inserted 226 O-ring/Fin
SC	226 O-ring/Flat Cap	STC	SS inserted 222 O-ring/Closed
SF	226 O-ring/Fin	STF	SS inserted 222 O-ring/Fin

[3]Available only in 9 5/8" (-9) and 19 5/8" (-19) lengths

Special Options

CODE	DESCRIPTION
Blank	None
Z6	Individual Poly bag only
Z15	Individual poly bag 15/ctn. (20", 30", 40")
Z30	Individual poly bag 30/ctn. (10")

Specifications are subject to change without notification.
For User Responsibility Statement, see www.parker.com/safety

© 2017 Parker-Hannifin Corporation
Industrial Process Filtration - North America
All Rights Reserved

Viton is a registered trademark of E.I. DuPont de Nemours & Co., Inc.

Fulflo® 1401 Pleated Cartridge

Pleated cartridge for high-efficiency, high-pressure, dirt-holding capacity & flow rate

Parker's Fulflo® 1401 pleated cartridges are designed to replace similar competitive cartridges in high pressure water injection & disposal, gas streams and fluid processing. The cartridges are available in cellulosic and polypropylene media.

Fulflo® 1401's are available in absolute ratings of 3, 6, 10, 12, 22, and 100 microns (ß = 5000, 99.98%).

Contact Information

Parker Hannifin Corporation
Industrial Process Filtration - N.A.
118 Washington Avenue
Mineral Wells, TX 76067

phone +1 940 325 2575
industrialprocess.na@parker.com

www.parker.com/industrialprocess

Benefits

- Retrofits into compatible housing that use 1401 style cartridges
- Maximize surface area to prevent particle bridging
- High filtration efficiency
- Low pressure drops
- High flow rates
- Internal o-ring seal for positive sealing
- Rugged construction
- ISO 9001 registered company

Applications

- Water Injection
- Solvents
- Acids
- Chemicals
- Hydrocarbons
- Water

ENGINEERING YOUR SUCCESS.

Fulflo® 1401 Pleated Cartridges

SPECIFICATIONS

Filtration Ratings
99.98% at 3µm, 6µm, 10µm, 12µm, 22µm, and 100µm pore sizes

Recommended Operating Conditions
Pressure rating - 50 psid

Temperature Rating - 275°F

Recommended flow rate - 75gpm

Change out ΔP - 35psid

Dimensions:
3¾″ OD x 2⅛″ ID x 38¾″ long

Materials of Construction
Filter media
PCC - Phenolic impregnated cellulose

PCG - Phenolic impregnated cellulose with 14% glass fiber

PPC - Polypropylene

Core & End Cap - Steel

Outer Mesh Sleeve - Polypropylene

Internal O-Ring - Buna-N

Liquid Particle Retention Ratings (µm) @ Removal Efficiency of:

Cartridge	ß = 5000 99.98%	ß = 1000 99.9%	ß = 100 99%	ß = 20 95%	ß = 10 90%
Pleated Polypropylene					
PPC005-1401	3	2.8	0.5	<0.5	<0.5
PPC010-1401	6	4.8	1.2	<0.5	<0.5
PPC020-1401	10	8	5	<1.0	<0.5
Pleated Cellulosic					
PCG020-1401*	10	8.6	1.8	0.9	<0.5
PCC3-1401	12	10	3	1.7	<0.5
PCC10-1401	22	18	6	3.2	<1.0
PCC30-1401	100	85	11	4.5	<1.0

Manufactured with 14% glass fiber

1401 Cross Reference	
Parker	**Pall**
PPC005-1401	MCC 1401J025 - H13
PPC010-1401	MCC 1401J060 - H13
PPC020-1401	MCC 1401 J100 - H13
PCG020-1401	MCC 1401 E100 - H13
PCC3-1401	-
PCC10-1401	MCC 1401E280 - H13
PCC30-1401	MCC 1401E500 - H13

Beta Ratio (ß) =

$$\frac{\text{Upstream Particle Count @ Specified Particle Size and Larger}}{\text{Downstream Particle Count @ Specified Particle Size and Larger}}$$

$$\text{Percent Removal Efficiency} = \left(\frac{ß-1}{ß}\right) \times 100$$

Performance determined per ASTM F-795-88. single-pass test using AC test dust in water.

Ordering Information

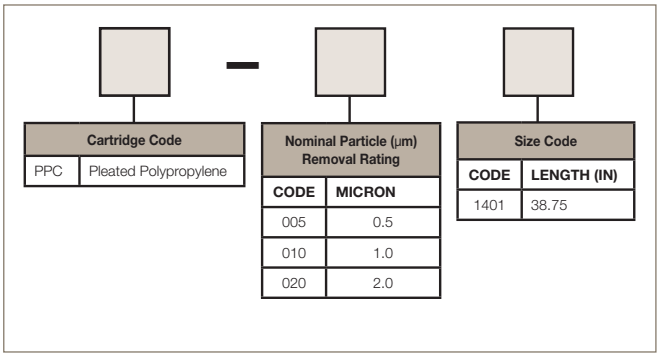

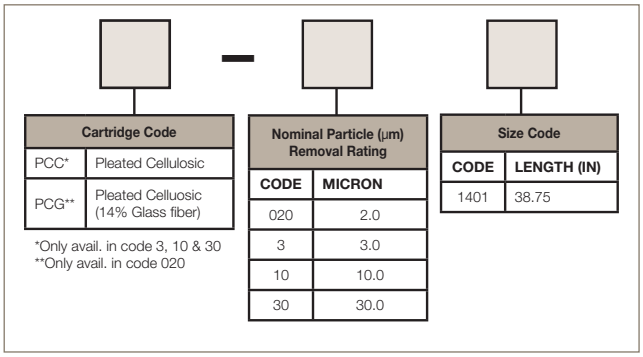

Specifications are subject to change without notification.
For User Responsibility Statement, see www.parker.com/safety

© 2017 Parker-Hannifin Corporation
Industrial Process Filtration - North America
All Rights Reserved

Fulflo is a registered trademark of Parker-Hannifin Corporation
Viton is a registered trademark of E.I. DuPont de Nemours & Co., Inc.

DS_IP_1401 Pleated Rev. B

Fulflo® PCC Filter Cartridge

Unique construction improves particle retention, service-life and flow rates

Parker Fulflo® Pleated Cellulosic Cartridges meet a broad range of critical filtration applications. Each cartridge in the Fulflo Pleated Cellulosic series is manufactured with premium grade, phenolic impregnated, cellulosic filter media. Phenolic resin locks the cellulosic fibers into a rigid, porous matrix. This structure provides superior particle removal and particle retention performance under the most severe conditions.

Fulflo Pleated Cartridges are available in 2µm, 3µm, 10µm, 30µm and 60µm pore sizes (99%+ removal: ß = 100).

Contact Information

Parker Hannifin Corporation
Industrial Process Filtration - N.A.
118 Washington Avenue
Mineral Wells, TX 76067

phone +1 940 325 2575
industrialprocess.na@parker.com

www.parker.com/industrialprocess

Benefits

- Premium pleated cellulosic media allow high flow capacity at low pressure drop
- Available in a variety of cartridge lengths and end cap configurations to fit most industrial vessels
- Phenolic resin impregnated to provide strength, integrity and high contaminant capacity
- High flow rates permit the use of smaller vessels & fewer cartridges
- Lower ΔP reduces power requirements and pump wear and tear
- Longer cartridge life reduces frequency of filter change out resulting in less disposal costs, reduced inventory and less process interruptions
- ISO 9001 registered company

Applications

- Chemical
- Oil Field
- Photographic
- Film & Paper
- Metal Treatment
- Process Water
- Synthetic Fibers
- Process Gas
- Petroleum
- Coatings, Paint
- Ink & Resins
- Recording Media

ENGINEERING YOUR SUCCESS.

Fulflo® PCC Filter Cartridge

SPECIFICATIONS

Materials of Construction

Phenolic impregnated cellulosic media (PCC)
Polypropylene support
Stainless steel support (optional)
PCG is glass-modified cellulose

Recommended Operating Conditions

Maximum 10gpm per 10 in length (38 lpm/254 mm)
Stainless Steel Support:
Maximum Temperature: 250°F (121°C)
Maximum DP: 50psi (3.5 kg/cm^2)
Optimum Change Out DP: 35psi (2.5 km/cm^2)

Polypropylene Support

Maximum Temperature @ 10psid (0.7 km/cm^2): 200°F (93°C)

Maximum Temperature @ 35psid (2.5 km/cm^2): 125°F (52°C)

Maximum ΔP @ 75°F (24°C): 60psi (4.2 kg/cm^2)

Change Out DP: 35psi (2.5 km/cm^2)

Filtration Ratings

99%+ at 2µm, 3µm, 10µm, 30µm, and 60µm pore sizes

Performance Attributes

Flow Rate and Pressure Drop Formulas

$$\text{Flow Rate (gpm)} = \frac{\text{Clean } \Delta P \times \text{Length Factor}}{\text{Viscosity} \times \text{Flow Factor}}$$

$$\text{Clean } \Delta P = \frac{\text{Flow Rate} \times \text{Viscosity} \times \text{Flow Factor}}{\text{Length Factor}}$$

Beta Ratio (ß) =

$$\frac{\text{Upstream Particle Count @ Specified Particle Size and Larger}}{\text{Downstream Particle Count @ Specified Particle Size and Larger}}$$

$$\text{Percent Removal Efficiency} = \left(\frac{\beta-1}{\beta}\right) \times 100$$

Performance determined per ASTM F-795-88. Single-Pass Test using AC test dust in water at a flow rate of 3.5gpm per 10 in (13.2 lpm per 254 mm) cartridge.

Notes:
1. Clean ΔP is psi differential at start.
2. Viscosity is centistokes. Use Conversion Tables for other units.
3. Flow Factor is ΔP/GPM at 1cks for 10 in. (or single).
4. Length Factors convert flow or ΔP from 10 in. (single length) to required cartridge length.

PCC/PCG Flow Factor (psid/gpm @ 1 cks)

Rating (µm)	Flow Factor
2	0.026
3	0.017
10	0.002
30	0.001
60	0.0005

Liquid Particle Retention Ratings (µm) @ Removal Efficiency of:

Cart.	ß=5000 Absolute	ß=1000 99.7%	ß=100 99%	ß=50 98%	ß@2 µm
PCG020	10	8.6	1.8	0.9	110
PCC3	12	10	3.2	1.7	64
PCC10	22	18	6	3.2	35
PCC30	100	85	11	4.5	25
PCC 60	150	90	30	15.0	10

Ordering Information

[ ] – [ ] [ ] [ ] – [ ]

Cartridge Code	
PCG020	2
PCC3	3
PCC10	10
PCC30	30
PCC60	60

Nominal Length	
CODE	INCHES (MM)
9	9 5/8" (244)
10	9 13/16" (249)
19	19 5/8" (498)
20	19 15/16" (506)
29	29 ¼" (743)
30	30 1/16" (764)
40	40 (1016)

Support Construction	
CODE	MATERIAL
A	Polypropylene (DOE/SOE)
G	304 Stainless Steel (DOE)

Seal Material	
CODE	MATERIAL
P	Poly Foam (DOE Gasket Only)
E	EPR
N	Buna-N
S	Silicone
V	Viton®

End Cap Configuration	
CODE	DESCRIPTION
AR	020 O-ring/Recessed (Gelman)
DO	Double open end (DOE)
DX	DOE w/Core Extender
LL	120/120 (Filterite LMO and Nuclepore Polymeric Vessels)*
LR	120 O-ring/Recessed (Nuclepore)*
OB	Std. Open End/Polypro Spring Closed End
PR	213 O-ring/Recessed (Ametek Polymeric Vessels)*
SC	226 O-ring/Flat
SF	226 O-ring/Fin
TB	222 Open End/Polypro Spring Closed End
TC	222 O-ring/Flat
TF	222 O-ring/Fin
TX	222 O-ring/Flex Fin
XB	Extended Core Open End/Polypro Spring Closed End

*Available only in 9 5/8" (-9) and 19 5/8" (-19) lengths

Specifications are subject to change without notification.
For User Responsibility Statement, see www.parker.com/safety

© 2017 Parker-Hannifin Corporation
Industrial Process Filtration - North America
All Rights Reserved

Fulflo is a registered trademark of Parker-Hannifin Corporation
Viton is a registered trademark of E.I. DuPont de Nemours & Co., Inc.

Fulflo® Poly-Mate™ Filter Cartridges

Quality, economical filtration for critical process applications

Parker's Poly-Mate™ Cartridges incorporate a unique combination of polypropylene melt blown and spun-bonded media to provide high surface area, finish-free and non-fiber releasing filtration. All-polypropylene construction maximizes chemical resistance to acids, bases, salts, and most organic solvents.

Poly-Mate™ Pleated Cartridges are available in 0.5µm, 1µm, 5µm, 10µm, 30µm, and 60µm pore sizes (99% removal; ß = 100).

Contact Information

Parker Hannifin Corporation
Bioscience Division - N.A.
2340 Eastman Avenue
Oxnard, CA 93030

phone +1 805 604 3583
bioscience.na@parker.com

www.parker.com/bioscience

Benefits

- High efficiency rated for critical process applications (99% efficiency)
- High pleated surface area for extended service life, low pressure drop and high flow capacity
- Poly-Mate™ Xtra Duty™ (PXD) cartridge features glass-filled polypropylene core for high temperature and high pressure use with rigid outer cage supporting pleated media in backwash applications
- Optional stainless steel O-ring adapter inserts provide added strength for *in situ* sterilization
- Poly-Mate™ Xtra Duty cartridges are available with backwashable construction, reducing replacement maintenance and cartridge disposal costs
- All materials of construction are FDA listed as acceptable for potable and edible liquid contact according to CFR Title 21
- One piece, continuous to 40 in length, integrally sealed pleated filter media
- ISO 9001 registered company

Applications

- Disposal Wells
- Photographic
- Wastewater
- High-Technology Coatings
- R.O. Membrane Pre-filtration
- Plating Chemicals
- Fine Chemicals
- Process Water
- Deionized Water

ENGINEERING YOUR SUCCESS.

Fulflo® Poly-Mate™ Filter Cartridges

SPECIFICATIONS

Materials of Construction

Filter media and support layers
Polypropylene
Surface treatment
None (fusion-sealed), chemically inert and neutral
Media protection
PM – polypropylene netting;
PXD – polypropylene cage
Pleat pack side seal - Fused polypropylene
End caps - Polypropylene
Seals - Buna-N, EPR, Silicone, Viton®, PFA encapsulated Viton® O-rings, Polyethylene foam gaskets

Recommended Operating Conditions
Poly-Mate Cartridges (Std.)

Change Out ΔP - 35psid (2.4bar)
Maximum Temperature - 200°F (93°C)
Maximum Temperature @ 35psid (2.4bar) - 125°F (52°C)
Maximum ΔP @ 70°F (21°C)
60psid (4.1bar)
Maximum ΔP @ 200°F (93°C)
10psid (0.7bar)

Poly-Mate Xtra-Duty Cartridges

Change Out ΔP - 35psid (2.4bar)
Maximum Temperature - 200°F (93°C)
Maximum Temperature @ 35psid (2.4bar) - 200°F (93°C)
Maximum ΔP @ 70°F (21°C)
90psid (6.1bar)
Maximum ΔP @ 200°F (93°C)
35psid (2.4bar)

Performance Attributes

Dimensions

Cartridge Outside Diameter
2 ½ in (63.5 mm)
Cartridge Inside Diameter
DOE – 1 1/16 in (27 mm)
SOE – 1 in. (25.4 mm)

Filtration Ratings

99% at 0.5µm, 1µm, 5µm, 10µm, 30µm, and 60µm pore sizes

Effective Filtration Area

Up to 6.0 ft^2/10 in (0.6m^2/254 mm)

Recommended Maximum Flow Rate

Maximum 10gpm per 10 in. length

Flow Rate and Pressure Drop Formulas

$$\text{Flow Rate (gpm)} = \frac{\text{Clean } \Delta P \times \text{Length Factor}}{\text{Viscosity} \times \text{Flow Factor}}$$

$$\text{Clean } \Delta P = \frac{\text{Flow Rate} \times \text{Viscosity} \times \text{Flow Factor}}{\text{Length Factor}}$$

Beta Ratio (ß) =

$$\frac{\text{Upstream Particle Count @ Specified Particle Size and Larger}}{\text{Downstream Particle Count @ Specified Particle Size and Larger}}$$

$$\text{Percent Removal Efficiency} = \left(\frac{ß-1}{ß}\right) 100$$

Performance determined per ASTM F-795-88. Single-Pass Test using AC test dust in water at a flow rate of 3.5gpm per 10 in (13.2 lpm per 254 mm) cartridge.

Notes:

1. **Clean ΔP** is psi differential at start.
2. **Viscosity** is centistokes. Use Conversion Tables for other units.
3. **Flow Factor** is ΔP/GPM at 1cks for 10 in. (or single).
4. **Length Factors** convert flow or DP from 10 in (single length) to required cartridge length.

Liquid Particle Retention Ratings (µm) @ Removal Efficiency of:

Cartridge	ß=5000 99.98%	ß=1000 99.9%	ß=100 99%	ß=50 98%	ß=20 95%	ß=10 90%
PM/PXD005	3	3	0.5	.25	<0.1	<0.1
PM/PXD010	5	4.5	1.0	0.5	0.2	<0.1
PM/PXD050	15	10	4	2.0	0.7	0.25
PM/PXD100	30	28	10	6	3	1.2
PM/PXD300	45	43	30	18	8	4.5
PM/PXD600	95	90	50	40	20	12

Poly-Mate Flow Factors (psid/gpm @ 1 cks)

Rating (µm)	Flow Factor
0.5	0.0900
1.0	0.0530
5.0	0.0290
10.0	0.0068
30.0	0.0048
60.0	0.0030

Poly-Mate Length Factors

Inches	Factor
9	1
10	1
19	2
20	2
24	3
30	3
39	4
40	4

Ordering Information

Cartridge Code	
PM	Standard
PXD	Xtra Duty

Pore Size	
CODE	MICRON
005	0.5
010	1.0
050	5.0
100	10.0
300	30.0
600	60.0

Nominal Length	
CODE	INCHES (MM)
9	9 5/8 (244)
10	9 13/16 (249)
19	19 5/8 (498)
20	19 15/16 (506)
29	29 1/4 (743)
30	30 1/16 (764)
40	40 (1016)

Core	
CODE	MATERIAL
A	Natural Polypropylene (PM core only)
F	Glass-filled polypropylene (PXD core only)
G	304 stainless steel (core only)

Seal Material	
CODE	MATERIAL
P	Polyfoam (DOE gasket only)
E	EPR
N	Buna-N
S	Silicone
T	PFA Encapsulated Viton® (222, 226 O-ring only)*
V	Viton®
X	No seal material

*PFA/Viton® is O-ring only, T is expanded PTFE gaskets

End Cap Configuration	
CODE	DESCRIPTION
AR	020 O-ring/Recessed cap
DO	Double open end (DOE)
DX	Double open end/extended core
LL	120/120 (Filterlite LMO & Nuclepore Polymeric Vessels)**
LR	120 O-ring/Recessed (Nuclepore)**
PR	213 O-ring/Recessed cap (Ametek® & Parker LT Polymeric Vessels) **
TC	222 O-ring/Flat
TF	222 O-ring/Fin
SC	226 O-ring/Flat
SF	226 O-ring/Fin

**Available only in 9 5/8" (-9) and 19 5/8" (-10) lengths

Special Options	
CODE	DESCRIPTION
B	Bubble-point test
R	DI water rinse (5 minutes)
Z6	Individual Poly bag only (PXD only)
Z15	Individual Poly bag 15/ctn. (20", 30", 40") (PXD only)
Z30	Individual Poly bag 30/ctn. (10") (PXD only)

Specifications are subject to change without notification.
For User Responsibility Statement, see www.parker.com/safety

© 2017 Parker-Hannifin Corporation
Bioscience Division - North America
All Rights Reserved

Fulflo is a registered trademark of Parker-Hannifin Corporation
Viton is a registered trademark of E.I. DuPont de Nemours & Co., Inc.
Ametek is a registered trademark of Ametek, Inc.

Fulflo® Poly-Mate™ Plus Filter Cartridges

High surface area and high efficiency all-polypropylene pleated cartridges

Fulflo® Poly-Mate™ Plus Cartridges, made of pleated polypropylene microfiber, provide high efficiency and high purity filtration. The high efficiency of the Poly-Mate Plus line makes it an ideal membrane pre-filter or cost-effective alternative to membrane cartridges in a wide range of applications.

Poly-Mate Plus Pleated Cartridges are available in the following pore sizes (nominal rating at 90%): 0.25µm, 0.45µm, 0.8µm, 2.0µm, 3.0µm, 5.0µm, 30.0µm, 50.0µm, 100.0µm.

Contact Information

Parker Hannifin Corporation
Industrial Process Filtration - N.A.
118 Washington Avenue
Mineral Wells, TX 76067

phone +1 940 325 2575
industrialprocess.na@parker.com

www.parker.com/industrialprocess

Benefits

- All-polypropylene media and construction meet a broad range of performance requirements
- One-piece integral construction is 100% bonded for maximum cartridge integrity
- High surface area design provides superior flow rates and extended service life
- All materials of construction are FDA listed as acceptable for potable and edible liquid contact according to CFR Title 21
- Fixed pore construction provides ultimate particle retention
- Major end seal options are available to fit most standard vessels
- Poly-Mate™ Plus cartridges are non-fiber releasing and ensure consistent quality filtration performance
- ISO 9001 registered company

Applications

- DI Water
- Process Water
- Magnetic Media
- Plating Chemicals
- Membrane Pre-filter

ENGINEERING YOUR SUCCESS.

Fulflo® Poly-Mate™ Plus Filter Cartridges

SPECIFICATIONS

Materials of Construction

Filter Media
- Melt blown polypropylene microfiber

Media Support Layers
- Non-woven or mesh polypropylene

Core
- Heavy wall high strength polypropylene

Media Support Cage and Thermally Welded End Caps
- Molded polypropylene

Seal Materials
- Buna-N, EPR, Silicone, Viton®, PFA Encapsulated Viton®

Dimensions:

Cartridge Outside Diameter:
- 2 11/16 in.

Cartridge Inside Diameter:
- DOE: 1 1/16 in.
- SOE: 1 5/32 in.

Maximum Recommended Operating Conditions:

Temperature - 200°F (93°C)

Temperature @ 35psid - 160°F (71°C)

Change Out ΔP - 35psi (2.4bar)

ΔP @ Ambient 70°F (21°C) - 70psi (4.8bar)

ΔP @ 200°F (93°C) - 20psi (1.4bar)

Flow Rate -10gpm (38 lpm) per 10 in. length

Product Safety:

- All components FDA listed per CFR, Title 21
- Non-fiber releasing per FDA Part 210.3B (5) and (6)
- Non-photosensitive

Filtration Ratings:

90% at 0.25, 0.45, 0.8, 2, 3, 5, 10, 30, 50 and 100 micrometer pore sizes

Performance Attributes

Flow Rate and Pressure Drop Formulas

$$\text{Flow Rate (gpm)} = \frac{\text{Clean } \Delta P \times \text{Length Factor}}{\text{Viscosity} \times \text{Flow Factor}}$$

$$\text{Clean } \Delta P = \frac{\text{Flow Rate} \times \text{Viscosity} \times \text{Flow Factor}}{\text{Length Factor}}$$

Notes:

1. Clean ΔP is psi differential at start.
2. Viscosity is centistokes. Use Conversion Tables for other units.
3. Flow Factor is psid/gpm at 1cks for 10 in. (or single).
4. Length Factors convert flow or ΔP from 10 in. (single length) to required cartridge length.

Liquid Particle Retention Ratings (µm) @ Removal Efficiency of:

Cart.	ß=1000 99.9%	ß=100 99%	ß=50 98%	ß=20 95%	ß=10 90%
PMP002	2.2	1.6	0.90	0.45	0.30
PMP004	3.1	2.9	1.4	0.75	0.45
PMP008	9.2	8.0	3.2	1.5	0.8
PMP020	11.0	9.5	8.6	3.1	1.7
PMP030	12.0	11.0	6.1	4.6	3.0
PMP050	14.0	12.0	10.6	8.4	5.0
PMP100	21.0	17.0	15.0	12.0	10.0
PMP300	52.0	44.0	35.0	24.0	15.0
PMP500	71.0	68.0	62.0	56.0	50.0
PMP1000	138.0	126.0	117.0	109.0	100.0

Poly-Mate Plus Flow Factors (psid/gpm @ 1 cks)

Rating (µm)	Flow Factor
0.25	0.0900
0.45	0.0530
0.8	0.0290
2	0.0068
3	0.0060
5	0.0048
10	0.0040
30	0.0030
50	0.0025
100	0.0020

Poly-Mate Plus Length Factors

In.	Factor
4	0.4
10	1.0
20	2.0
30	3.0
40	4.0

Ordering Information

PMP [ ] — [ ] [ ] — [ ] — [ ]

Cartridge Code	
PMP	Poly-Mate Plus

Pore Size	
CODE	MICRON
002	0.25
004	0.45
008	0.8
020	2
030	3
050	5
100	10
300	30
500	50
1000	100

Nominal Length	
CODE	INCHES
4	4
10	9 13/16
20	19 15/16
30	30 1/16
40	40

Support Construction	
CODE	MATERIAL
A	Natural Polypropylene (All support components)

Seal Material	
CODE	MATERIAL
E	EPR
N	Buna-N
S	Silicone
T	PFA/Viton® (SOE)
V	Viton®

End Cap Configuration	
CODE	DESCRIPTION
AR	020 O-ring/Recessed cap
DO	Double open end (DOE)
DX	Double open end/extended core
LL	120/120 (Filterlite LMO & Nuclepore Polymeric Vessels)**
LR	120 O-ring/Recessed (Nuclepore)**
PR	213 O-ring/Recessed cap (Ametek® & Parker LT Polymeric Vessels) **
TC	222 O-ring/Flat
TF	222 O-ring/Fin
SC	226 O-ring/Flat
SF	226 O-ring/Fin

**Available only in 9 5/8" (-9) and 19 5/8" (-10) lengths

Special Options	
CODE	DESCRIPTION
No Symbol	No Option
B	Bubble-point test
R	DI water rinse (5 minutes)
Z6	Individual Poly bag only

Specifications are subject to change without notification.
For User Responsibility Statement, see www.parker.com/safety

© 2017 Parker-Hannifin Corporation
Industrial Process Filtration - North America
All Rights Reserved

Fulflo is a registered trademark of Parker-Hannifin Corporation
Viton is a registered trademark of E.I. DuPont de Nemours & Co., Inc.
Ametek is a registered trademark of Ametek, Inc.

Large Diameter Pleated Depth Filter Cartridges

Fulflo® HF Depthflo™
Filter Cartridge
Microglass filter for high-flo and high dirt holding

Fulflo® MaxGuard
Filter Cartridge
High capacity design

Fulflo® MaxGuard SELECT
Filter Cartridge
Ultra high capacity cartridge

Fulflo® MegaFlow™
Filter Cartridge
Pleated cartridges for high-flow capacity

Fulflo® MegaFlow™ Plus
Filter Cartridge
Absolute-rated, high-flow capacity pleated cartridge

Fulflo® ParMax Filter Cartridge
Large-diameter, high-flow cartridges

Fulflo® ParMax SELECT
Filter Cartridge
High-flow design

Toll free sales & technical support:
940.325.2575
industrialprocess.na@parker.com

Fulflo® HF Depthflo™ Filter Cartridges

High capacity pleated microglass filter optimized for high-flow and high dirt-holding

The Fulflo® HF Depthflo™ microglass pleated filter cartridges are offered in 6" diameter x 80" lengths. The high surface area filter media is supported with a tin plated steel core and outer cage utilizing an external O-ring seal with a closed cap. The Fulflo® HF Depthflo™ pleated filter cartridge is targeted for natural gas, oil production, salt dome storage, and high dirt process applications.

The Fulflo® HF Depthflo™ pleated filter cartridge is designed to reduce the overall cost of filtration by minimizing the frequency of change-outs to lower labor time and production downtime.

Contact Information

Parker Hannifin Corporation
Industrial Process Filtration - N.A.
118 Washington Avenue
Mineral Wells, TX 76067

phone +1 940 325 2575
industrialprocess.na@parker.com

www.parker.com/industrialprocess

Benefits

- Fewer Element Change-outs
- Lower Maintenance Costs
- Lower Disposal Costs
- Smaller Filter Vessels

Applications

- Natural gas
- Salt dome storage
- Oil production
- High-dirt oil process applications

Features

- High performance depthflo media for gels and deformable particles
- Fine fibers provide maximum dirt holding, high-flow for long life
- Rates, and particle removal cut off
- Dual drainage layers prevent fiber migration and assure even flow distribution
- High efficiency
- ISO 9001 registered company

ENGINEERING YOUR SUCCESS.

Fulflo® HF Depthflo™

SPECIFICATIONS

Materials of Construction

Filter Media Options
- Microglass with nylon support
- Microglass with polyester support
- Microglass with polypropylene support

Outer Cage/Inner core
- Tin plated steel

End cap
- Nylon high flow single open-end with handle and external O-ring

Seal Materials
- Buna-N, EPDM, Silicone, Viton®

Dimensions:

Cartridge Outside Diameter:
- 6 in.

Cartridge Inside Diameter:
- 3-½ in.

Cartridge Length:
- 80 in.

Maximum Flow Rate:

350 gpm

Maximum Differential Pressure:

70 lb.

Maximum Recommended Operating Conditions:

- Glass media with Polypropylene support is recommended for most applications where the operating temperature is up to 180 °F with no presence of Hydrocarbons.
- Glass media with Polyester support is recommended for most applications where the operating temperature is up to 258 °F with no presence of Amines.
- Glass media with Nylon support is recommended for most applications where the operating temperature is up to 300 °F.

Liquid Particle Retention Ratings (µm) @ Removal Efficiency of:

ß=5000 Absolute	ß=1000 99.9%	ß=100 99%	ß=50 98%	ß=20 95%
0.45	0.3	<0.1	<0.1	<0.1
1	0.6	0.2	<0.1	<0.1
2	1.2	0.4	0.2	0.1
4.5	2.8	1	0.45	0.3
10	7	3.5	1.6	1.2
20	16	8	4	2.5
40	32	20	11	8
50	40	30	13	10
100	85	65	30	25

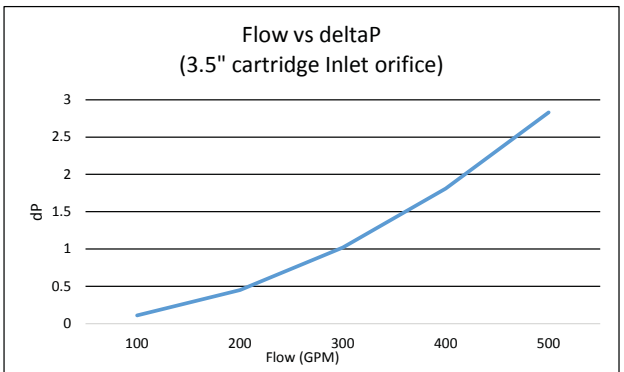

Note: The 3.5" inlet orifice of this product offering is the flow-limiting

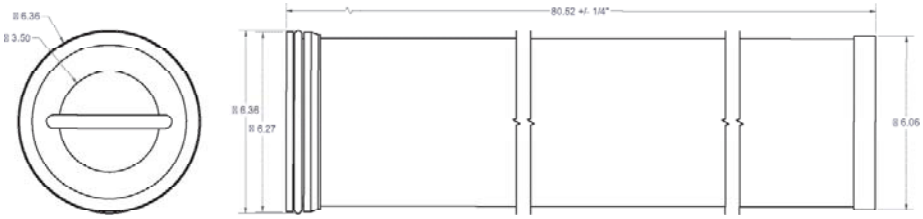

Ordering Information

HF [ ] [ ] – [ ] 80 [ ] CS

Cartridge Series
High Flow 80"

Media	
Code	**Description**
GN	Microglass media with nylon support
GP	Microglass media with polyester support
PP	Microglass media with polypropylene support

Micron Rating	
Code	Micron
0-45	.45
1-0	1.0
2-0	2.0
4-5	4.5
10	10
20	20
40	40
50	50
100	100

Efficiencies	
Code	**Description**
A	Absolute (ß=5000)
N	Nominal (ß=10)

Length	
Code	**Inches/mm**
80	80

Seal Material	
E	EPDM
N	Buna-N
S	Silicon
V	Viton®

Body Material	
CS	Tin plated steel

Specifications are subject to change without notification.
For User Responsibility Statement, see www.parker.com/safety

© 2017 Parker-Hannifin Corporation
Industrial Process Filtration - North America
All Rights Reserved

Fulflo is a registered trademark of Parker-Hannifin Corporation
Viton is a registered trademark of E.I. DuPont de Nemours & Co., Inc.

DS_IP_ HF80_Rev. A

Fulflo® MaxGuard™ Filter Cartridges

High-capacity cartridge

Parker's MaxGuard™ high capacity cartridge product line provides a cost effective alternative to bag media or standard 2½ inch cartridges for high flow applications. Each MaxGuard cartridge has a 6" nominal outside diameter and can handle flows up to 90gpm, significantly reducing the number of cartridges required for large flow applications.

MaxGuard cartridges are available in polypropylene, and cellulose media. All cartridges feature an industry standard 226 positive O-ring seal and easy-to-grasp integrated handle.

Contact Information

Parker Hannifin Corporation
Industrial Process Filtration - N.A.
118 Washington Avenue
Mineral Wells, TX 76067

phone +1 940 325 2575
industrialprocess.na@parker.com

www.parker.com/industrialprocess

Benefits

- High flow capacity means fewer cartridges and reduced labor costs associated with change-out
- High flow capacity allows for smaller housings and less capital expenditure
- Heavy wall core ensures superior strength
- Integrated handle makes change-outs fast, easy and safe
- Positive 226 O-ring seal assures filtration integrity
- Absolute retention ratings for critical filtration
- All cartridges constructed with polypropylene (MXGP) are FDA listed as acceptable for potable and edible contact according to CFR Title 21
- Manufactured with strict quality control
- ISO 9001 registered company

Applications

- Deep well injection
- Amines
- Commercial water
- Food and Beverage

ENGINEERING YOUR SUCCESS.

Fulflo® MaxGuard™ Filter Cartridges

SPECIFICATIONS

Materials of Construction

Media:
MXGP (Polypropylene)
MXGC (Cellulose)

Support/Drainage
Polypropylene (MXGP/C)

Structural components
Polypropylene (MXGP/C)

Seal Material
Various

Recommended Operating Conditions

Maximum Temperature
MXGP/C - 176°F (80°C) @ 30psid (2.1bar)

Maximum Differential Pressure

Forward:
70psid (4.8bar) @ 77°F (25°C)
30psid (2.1bar) @ 176°F (80°C)

Liquid Particle Retention Ratings (µm) @ Removal Efficiency of:

Cartridge	ß=5000 Absolute	ß=1000 | 99.90%	ß=100 | 99%	ß=50 | 98%	ß=20 | 95%
MXGC020	2	1.6	0.4	0.2	<0.1
MXGC100	10	6	1.4	0.5	<0.2
MXGC150	15	11	3	1.5	<0.6
MXGC700	70	53	8.5	3	<0.5
MXGP005	0.5	0.4	0.2	<0.2	<0.1
MXGP020	2	1.4	0.4	0.2	<0.1
MXGP050	5	3.8	1.2	0.3	<0.1
MXGP100	10	7	3	0.9	<0.2
MXGP200	20	18	5	2	<0.2
MXGP400	40	23	18	8	<0.7
MXGP700	70	50	30	20	10

MaxGuard Cartridge Flow Factors* (psid/gpm @ 1 cks)

Cart.	Flow Factor
MXGC020	0.00170
MXGC100	0.00110
MXGC150	0.00012
MXGC700	0.00007

*Flow Factors based on water at ambient temperature

MaxGuard Cartridge Flow Factors* (psid/gpm @ 1 cks)

Cart.	Flow Factor
MXGP005	0.01086
MXGP020	0.00950
MXGP050	0.00619
MXGP100	0.00218
MXGP200	0.00051
MXGP400	0.00023
MXGP700	0.00011

*Flow Factors based on water at ambient temperature

Ordering Information

MXGP [ ] — [ ] [ ] — [ ]

Cartridge Series
MXGP Polypropylene

Micron Rating	
005	0.5
020	2.0
050	5.0
100	10
200	20
400	40
700	70

Length	
Code	Inches
30	30
40	40

Seal Material	
E	EPR
N	Buna-N
V	Viton®
S	Silicon
T	PFA/Viton®

End Cap Configuration	
SM	226 O-Ring/Flat Cap w/handle

MXGC [ ] — [ ] [ ] — [ ]

Cartridge Series
MXGP Cellulose

Micron Rating	
020	2.0
100	10
150	15
700	70

Length	
Code	Inches
30	30
40	40

Seal Material	
E	EPR
N	Buna-N
V	Viton®
S	Silicon
T	PFA/Viton®

End Cap Configuration	
SM	226 O-Ring/Flat Cap w/handle

Specifications are subject to change without notification.
For User Responsibility Statement, see www.parker.com/safety

© 2017 Parker-Hannifin Corporation
Industrial Process Filtration - North America
All Rights Reserved

Fulflo is a registered trademark of Parker-Hannifin Corporation
Viton is a registered trademark of E.I. DuPont de Nemours & Co., Inc.

Fulflo® MaxGuard™ SELECT Filter Cartridges

Ultra high capacity cartridge

Parker's new Fulflo® MaxGuard Select high-capacity cartridge product line provides a cost-effective alternative to bag media or standard 2½ inch cartridges for high flow applications. Each MaxGuard Select cartridge can handle flows up to 100gpm, significantly reducing the number of cartridges required for large-flow applications. MaxGuard Select contains up to 40% more dirt-holding capacity than the standard MaxGuard.

The MaxGuard Select Cartridge is available with polypropylene media. All cartridges feature an industry-standard 226 positive O-ring seal and an easy-to-grasp integrated handle.

Contact Information

Parker Hannifin Corporation
Industrial Process Filtration - N.A.
118 Washington Avenue
Mineral Wells, TX 76067

phone +1 940 325 2575
industrialprocess.na@parker.com

www.parker.com/industrialprocess

Benefits

- High flow capacity means fewer cartridges and reduced labor costs associated with change-out
- High flow capacity allows for smaller housings & less capital expenditure
- Cartridge is 100% thermally welded
- Heavy-wall core ensures superior strength
- Integrated handle makes change-outs fast, easy and safe
- Positive 226 O-ring seal assures filtration integrity
- Absolute retention ratings from 0.5 to 70 micron for critical filtration
- All cartridges constructed with polypropylene (MGSP) are FDA listed as acceptable for potable and edible contact according to CFR Title 21
- Manufactured with strict quality control
- ISO 9001 registered company

Applications

- Deep well injection
- Amines
- Commercial water
- Food and Beverage

ENGINEERING YOUR SUCCESS.

Fulflo® MaxGuard™ SELECT Filter Cartridges

SPECIFICATIONS

Materials of Construction

- Media:
  MGSP (polypropylene)
- Support/Drainage:
  Polypropylene (MGSP), stainless
- Structural components:
  Polypropylene (MGSP)
- Seal Material:
  Various

Dimensions

- 6.06 in. (154 mm) OD
- 1.92 in. (49 mm) ID
- 30 in. (762 mm) long
- 40 in. (1016 mm) long

Recommended Operating Conditions

- Maximum Temperature:
  MGSP - 176ºF (80ºC) @
  30psid (2.1bar)
- Maximum Differential Pressure:
  Forward:
  70psid (4.8bar) @ 77ºF (25ºC)
  30psid (2.1bar) @ 176ºF (80ºC)

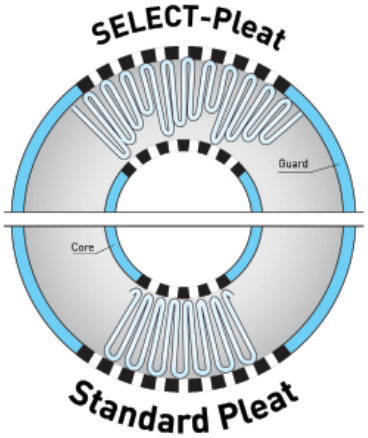

With Select Pleating, there is more open area on the inside of the cartridge for additional contaminant-holding capacity.

MaxGuard Cartridge Flow Factors (psid/gpm @ 1cks):

Cartridge	Flow Factor
MGSP005	0.00869
MGSP020	0.00760
MGSP050	0.00495
MGSP100	0.00174
MGSP200	0.00041
MGSP400	0.00018
MGSP700	0.00009

*Flow factors based on water at ambient temperature

Liquid Particle Retention Ratings (µm) @ Removal Efficiency of:

Cartridge	ß = 5000 Absolute	ß = 1000 99.9%	ß = 100 99%	ß = 50 98%	ß = 20 95%
MGSP005	0.5	0.4	0.2	<0.2	<0.1
MGSP020	2	1.4	0.4	0.2	<0.1
MGSP050	5	3.8	1.2	0.3	<0.1
MGSP100	10	7	3	0.9	<0.2
MGSP200	20	18	5	2	<0.2
MGSP400	40	23	18	8	<0.7
MGSP700	70	50	30	20	10

Ordering Information

MGSP [ ] – [ ] [ ] – [ ]

Cartridge Series
MaxGuard Select

Micron Rating	
005	0.5
020	2
050	5
100	10
200	20
400	40
700	70

Length	
Code	**Inches**
30	30
40	40

Seal Material	
E	EPR
N	Buna-N
V	Viton®
S	Silicon
T	PFA/Viton®

End Cap Configuration	
SM	226/flat cap w/handle

Specifications are subject to change without notification.
For User Responsibility Statement, see www.parker.com/safety

© 2017 Parker-Hannifin Corporation
Industrial Process Filtration - North America
All Rights Reserved

Fulflo is a registered trademark of Parker-Hannifin Corporation
Viton is a registered trademark of E.I. DuPont de Nemours & Co., Inc.

DS_IP_ MaxGuard Select Rev. A

Fulflo® MegaFlow™ Filter Cartridges

Pleated cartridges for high-flow capacity

Parker's Fulflo® MegaFlow™ cartridges are a cost effective alternative to wound and other 2½ in. OD style filter cartridges in high flow applications, such as reverse osmosis pre-filtration, where nominal efficiency is sufficient. Each MegaFlow cartridge can handle flow rates up to 175gpm (662lpm), which reduces the number of cartridges required and allows for smaller housings. Each 6 inch (152 mm) diameter MegaFlow cartridge has flow capacity equal to 8 standard 2½ in. OD X 40 in. long cartridges. Positive O-ring seals and a built-in handle make cartridge installation reliable, fast & easy. MegaFlow cartridges are available in either pleated polypropylene or cellulose media with nominal ratings of 0.5, 1, 5 & 10 micron.

Contact Information

Parker Hannifin Corporation
Industrial Process Filtration - N.A.
118 Washington Avenue
Mineral Wells, TX 76067

phone +1 940 325 2575
industrialprocess.na@parker.com

www.parker.com/industrialprocess

Benefits

- High-flow capacity means fewer cartridges & change-outs which reduces labor costs
- High-flow capacity allows for smaller housings and less capital expenditure
- Built in handle makes change fast, easy and safe
- O-ring seal assures filtration integrity
- Choice of polypropylene or cellulose media allows use in both aqueous and non-aqueous fluid applications
- Thermally bonded polypropylene and phenolic resin bonded cellulose filter media prevent particle bleed through and unloading that commonly occurs with wound cartridges
- High surface area pleated design provides lower pressure drop and longer service life
- All cartridges constructed with polypropylene are FDA listed as acceptable for potable and edible contact according to CFR Title 21
- Horizontal and vertical housings are available for flow rates up to 3,325gpm (12,586 lpm)
- ISO 9001 registered company

Applications

- Potable Water
- Waste Water
- Reverse Osmosis Pre-Filtration
- Lubricating Oil
- Coolants

ENGINEERING YOUR SUCCESS.

Fulflo® MegaFlow Filter Cartridges

SPECIFICATIONS

Materials of Construction

Media
Polypropylene microfiber (P Code);
Cellulose with phenolic binder (C Code)

Support Layers
Polypropylene (P Code); None (C Code)

End caps
Glass filled polypropylene

O-Rings
Buna-N, EPR, silicone, fluoroelastomer

Recommended Operating Conditions

Change out differential pressure
35psid (2.4bar)

Maximum flow rate - 175gpm (662 lpm)

Maximum temperature - 200°F (93°C)

Maximum differential pressure
150psid (10bar)

Nominal Filtration Ratings

(90%) 0.5, 1, 5 and 10 µm

Dimensions

6 in. (152 mm) OD, 3.5 in (89 mm) ID,
40 in. (1016 mm) long

Surface Area

55-60 ft^2 (5.1-5.6m^2)

Cartridge Code	Nominal Rating	Media	Removal Rating (µm) @ Efficiency of:					Flow Factor* [(psid | gpm (mbar | lpm)]
			90%	95%	98%	99%	99.9%	
MCNP005	0.5	Polypropylene	0.5	1	2	5	10	0.003 (0.06)
MCNP010	1	Polypropylene	1	3	7	10	30	0.0007 (0.014)
MCNP050	5	Polypropylene	5	10	20	30	50	0.0004 (0.008)
MCNP100	10	Polypropylene	10	30	50	60	90	0.0003 (0.006)
MCNC005	0.5	Cellulose	0.5	1	2	3	10	0.002 (0.03)
MCNC010	1	Cellulose	1	2	3	5	20	0.0002 (0.003)
MCNC050	5	Cellulose	5	8	10	15	85	0.0001 (0.002)
MCNC100	10	Cellulose	10	12	15	30	100	0.00005 (0.0009)

*In water at 1cks

Flow Rate and Pressure Drop Formulas

$$\text{Flow Rate (gpm)} = \frac{\text{Clean } \Delta P \times \text{Length Factor}}{\text{Viscosity} \times \text{Flow Factor}}$$

$$\text{Clean } \Delta P = \frac{\text{Flow Rate} \times \text{Viscosity} \times \text{Flow Factor}}{\text{Length Factor}}$$

Notes:
1. Clean ΔP is psi differential at start.
2. Viscosity is centistokes. Use Conversion Tables for other units.
3. Flow Factor is ΔP/GPM at 1cks for 10 in. (or single).
4. Length Factors convert flow or ΔP from 10 in. (single length) to required cartridge length.

Ordering Information

MCN [ ] [ ] — **40** [ ]

Cartridge Code
MegaFlow Nominal Series

Media	
P	Polypropylene
C	Cellulose

Micron Rating	
005	0.5µm
010	1µm
050	5µm
100	10µm

Length (in.)	
40	40"

O-Ring Material	
E	EPR
N	Buna-N
S	Silicone
V	Viton®

Specifications are subject to change without notification.
For User Responsibility Statement, see www.parker.com/safety

© 2017 Parker-Hannifin Corporation
Industrial Process Filtration - North America
All Rights Reserved

Fulflo is a registered trademark of Parker-Hannifin Corporation
Viton is a registered trademark of E.I. DuPont de Nemours & Co., Inc.

DS_IP_MegaFlow Rev. A

Fulflo® MegaFlow™ Plus Filter Cartridges

Absolute-rated, high-flow capacity pleated cartridge

Parker's Fulflo® MegaFlow™ Plus cartridges are ideally suited for high flow applications where absolute particle removal is required. Each Mega-Flow Plus cartridge can handle flow rates up to 175gpm (662 lpm), significantly reducing the number of cartridges required as well as the housing size. Each 6 inch (152 mm) diameter MegaFlow+ cartridge has flow capacity equal to 8 standard 2 ½ inch OD X 40 inch long cartridges. Positive O-ring seals and a built in handle make cartridge installation reliable, fast and easy. MegaFlow Plus cartridges are available with pleated polypropylene media for use in a wide variety of fluids. Absolute ratings range from 1 µm to 150 µm.

Contact Information

Parker Hannifin Corporation
Industrial Process Filtration - N.A.
118 Washington Avenue
Mineral Wells, TX 76067

phone +1 940 325 2575
industrialprocess.na@parker.com

www.parker.com/industrialprocess

Benefits

- High-flow capacity means fewer cartridges and less time to change
- High-flow capacity allows smaller housings
- Built in handle makes change fast, easy and safe
- O-ring seal assures filtration integrity
- Choice of polypropylene media expands fluid compatibility
- High surface area pleated design provides low pressure drop and long service life
- All cartridges constructed with polypropylene are FDA listed as acceptable for potable and edible contact according to CFR Title 21
- Horizontal & vertical housings available for flow rates up to 3325gpm (12,586 lpm)
- Reduces process interruptions
- ISO 9001 registered company

Applications

- Potable Water
- Vegetable Oil
- Wastewater
- Lubricants
- Food and Beverage
- Coolants

ENGINEERING YOUR SUCCESS.

Fulflo® MegaFlow™ Plus Filter Cartridges

SPECIFICATIONS

Absolute Filtration Ratings
(β_x = 5000; 99.98%)

Polypropylene - 1, 2, 5, 10, 20, 40, 70 µm
Cellulose - 10, 15, 25, 100, 150 µm

Materials of Construction

Media
- Polypropylene microfiber (P Code)
- Cellulose with phenolic binder (C Code)

Support Layers
- Polypropylene (P Code)

End caps
- Glass Filled Polypropylene

O-Rings
- Buna-N, EPR, Silicone, Fluoroelastomer

Recommended Operating Conditions

Change Out Differential Pressure
- 35psid (2.4bar)

Maximum Flow Rate
- 175gpm (662 lpm)

Maximum Temperature
- 200°F (93°C)

Maximum Differential Pressure
- 150psid (10bar)

Dimensions
- 6 in. (152 mm) OD
- 3.5 in. (89 mm) ID
- 40 in. (1016 mm) long

Surface Area
- 55 - 60 ft.^{2} (5.1 - 5.6 m^2)

Cartridge Code	Absolute Rating	Media	Removal Rating (µm) @ Efficiency of:				Flow Factor* [(psid | gpm (mbar | lpm)]
			98%	99%	99.9%	99.98%	
MCAP010	1	Polypropylene	<0.2	0.45	0.8	1	0.078 (1.4)
MCAP020	2	Polypropylene	0.2	0.8	1.5	2	0.031 (0.6)
MCAP050	5	Polypropylene	0.45	1	4	5	0.008 (0.01)
MCAP100	10	Polypropylene	0.5	2	7	10	0.003 (0.06)
MCAP200	20	Polypropylene	2	4	13	20	0.002 (0.04)
MCAP400	40	Polypropylene	3	7	22	40	0.001 (0.02)
MCAP700	70	Polypropylene	15	22	52	70	0.0008 (0.015)
MCAC100	10	Cellulose	1	2	8	10	0.003 (0.05)
MCAC150	15	Cellulose	2	3	10	15	0.002 (0.03)
MCAC250	25	Cellulose	3	5	20	25	0.0002 (0.003)
MCAC1000	100	Cellulose	5	10	85	100	0.0001 (0.002)
MCAC1500	150	Cellulose	15	30	100	150	0.00005 (0.0009)

*In water at 1cks

Flow Rate and Pressure Drop Formulas

$$\text{Flow Rate (gpm)} = \frac{\text{Clean } \Delta P \times}{\text{Viscosity x Flow Factor}}$$

Clean ΔP = Flow Rate x Viscosity x Flow Factor

Note:
1. Clean ΔP is psi differential at start.
2. Viscosity is centistokes. Use Conversion Tables for other units.
3. Flow Factor is ΔP/GPM at 1cks for 10 in (or single).

Ordering Information

MCA [ ] [ ] — [ ] [ ]

Cartridge Code
MegaFlow Plus Absolute Series

Media	
CODE	DESCRIPTION
P	Polypropylene
C	Cellulose

Micron Rating	
CODE	µm
010	1 (P)
020	2 (P)
050	5 (P)
100	10 (P, C)
150	15 (C)
200	20 (P)
250	25 (C)
400	40 (P)
700	70 (P)
1000	100 (C)
1500	150 (C)

Length	
CODE	IN.
40	40"

O-Ring Material	
CODE	DESCRIPTION
E	EPR
N	Buna-N
S	Silicone
V	Viton®

Specifications are subject to change without notification.
For User Responsibility Statement, see www.parker.com/safety

© 2017 Parker-Hannifin Corporation
Industrial Process Filtration - North America
All Rights Reserved

Fulflo is a registered trademark of Parker-Hannifin Corporation
Viton is a registered trademark of E.I. DuPont de Nemours & Co., Inc.

Fulflo® ParMax™ Filter Cartridges

Large-diameter, high-flow cartridges

The best of pleated and large diameter technologies are combined in Parker's ParMax™ high-flow filter cartridges. ParMax cartridges are available with polypropylene and microfiberglass media in absolute (99.98%) ratings from 0.8 to 90 micron. The unique layered construction provides excellent retention across a wide range of flux rates. One-six inch diameter cartridge can handle up to 500gpm flow (60" length). The inside-to-outside flow allows for a high contaminant holding capacity. High flow and a long filter life make the ParMax an ideal choice for a wide variety of critical process applications.

Contact Information

Parker Hannifin Corporation
Industrial Process Filtration - N.A.
118 Washington Avenue
Mineral Wells, TX 76067

phone +1 940 325 2575
industrialprocess.na@parker.com

www.parker.com/industrialprocess

Benefits

- Large diameter yields much higher flow rates compared to traditional 2.5″ filters
- High flow capacity permits use of fewer elements and cuts capital expenditure
- Inside-out flow pattern ensures positive capture of contaminants
- Absolute retention ratings for critical filtration
- All materials of construction are FDA listed as acceptable for potable and edible liquid contact according to CFR Title 21
- Manufactured with strict quality control
- ISO 9001 registered company

Applications

- Process water
- Water
- Spirits
- Food and beverage

ENGINEERING YOUR SUCCESS.

Fulflo® ParMax™ Filter Cartridges

SPECIFICATIONS

Materials of Construction

Media:
RCP - Polypropylene
RMG - Microfiberglass

Support/Drainage:
Polypropylene

Hardware:
Polypropylene

O-rings:
EPDM, Buna-N, Viton®, silicone

Retention Ratings (99.98%):
0.8, 1, 3, 4.5, 10, 20, 30, 40 and 90 µm

Maximum Operating Conditions:
Maximum Temperature
176°F (80°C) @ 30psid (2.1bar)

Maximum Differential Pressure:
70psi (4.8bar) @ 77°F (25°C)
30psi (2.1bar) @ 176°F (80°C)

Recommended Operating Conditions:
Flow Rate
Up to 175gpm (662 lpm)/20” element
Up to 350gpm (1325 lpm)/40” element
Up to 500gpm (1892 lpm)/60” element
Change-out Pressure
35psid (2.41bar)

Dimensions (nominal):
Outside Diameter: 6” (152mm)
Inside Diameter: 2.9” (74mm)

Flow vs dP
(2.9" Cartridge Inlet Orifice)

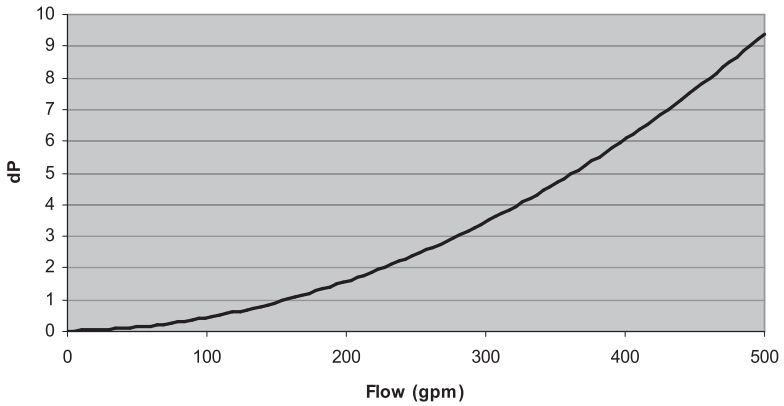

Note: The 2.9˝ inlet orifice of the ParMax Cartridge is the flow-limiting factor

Ordering Information

[ ] [ ] — [ ] [ ] PP

Cartridge Code	
Code	Description
RCP*	Polypropylene
RMG**	Glass

*Avail. in all micron sizes
**Avail. in all micron sizes except 90 micron

Micron Rating	
Code	µm
008	0.8
010	1.0
030	3.0
045	4.5
100	10
200*	20
400*	40
900	90

*Non-FDA compliant in glass only

Length	
Code	Inches
20	20˝ (50.8 cm)
40	40” (101.6 cm)
60	60” (152.4 cm)

Seal Material	
Code	Description
E	EPDM
N	Buna-N
S	Silicon
V	Viton®

End Cap Configuration	
Code	Description
PP	435 O-ring/Closed

Specifications are subject to change without notification.
For User Responsibility Statement, see www.parker.com/safety

© 2010 Parker-Hannifin Corporation
domnick hunter Process Filtration - North America
All Rights Reserved
Fulflo is a registered trademark of Parker-Hannifin Corporation
Viton is a registered trademark of E.I. DuPont de Nemours & Co., Inc.

DS_IP_ ParMax Cartridge Rev. C

Fulflo® ParMax™ SELECT Filter Cartridges

High-flow design

The best of pleated and large diameter technologies are combined in Parker's ParMax Select high flow filter cartridges. The unique layered construction and staged pleating provide improved dirt holding capacity and retention across a wide range of flux rates. One six-inch diameter cartridge can handle up to 500gpm flow (60" length). The inside to outside flow allows for a high contaminant holding capacity and a long filter life which makes the ParMax Select an ideal choice for a wide variety of critical process applications.

ParMax Select cartridges are available with polypropylene pleated depth media and microfiberglass media in absolute (99.98%) ratings from 1 to 90 microns.

Contact Information

Parker Hannifin Corporation
Industrial Process Filtration - N.A.
118 Washington Avenue
Mineral Wells, TX 76067

phone +1 940 325 2575
industrialprocess.na@parker.com

www.parker.com/industrialprocess

Benefits

- Large diameter yields higher flow rates than traditional 2.5″ filters
- High flow capacity allows for fewer elements and less capital expense
- 100% thermally welded
- Inside-out flow pattern ensures positive capture of contaminants
- Absolute retention ratings for critical filtration
- All materials of construction are FDA listed as acceptable for potable and edible liquid contact according to CFR Title 21
- Manufactured with strict quality control
- ISO 9001 registered company

Applications

- Process Water
- Power Generation
- Specialty chemicals
- Food and Beverage

ENGINEERING YOUR SUCCESS.

Fulflo ParMax™ SELECT Cartridge

ParMax™ Select High Flow Cartridge

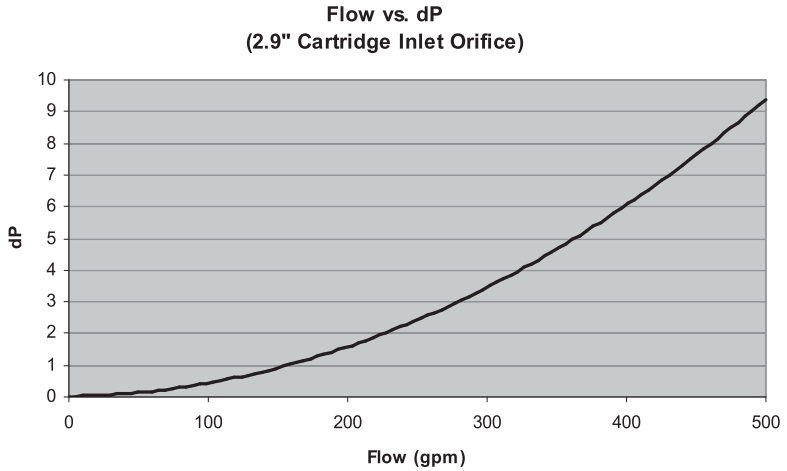

Note: The 2.9˝ inlet orifice of the ParMax Select Cartridge is the flow-limiting factor

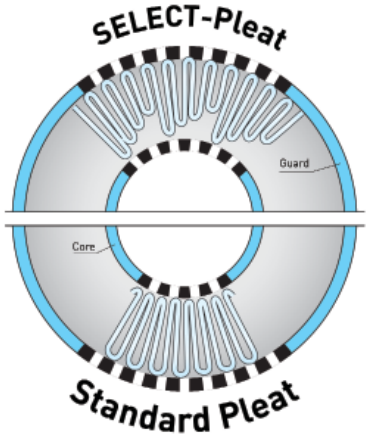

With Select Pleating, there is more open area on the inside of the cartridge for additional contaminant-holding capacity.

Materials of Construction:

- Media:
  RSCP - Polypropylene
  RSMG - Microfiberglass
- Support/Drainage:
  Polypropylene
- Hardware: Polypropylene
- O-Rings (SOE):
  EPDM, Buna-N, Viton®, Silicone

Retention Ratings (99.98%):

- 1, 3, 4, 5, 10, 20, 30, 40, 90 µm

Dimensions (nominal):

Outside Diameter: 6.0˝ (15.24 cm)
Inside Diameter: 2.9˝ (7.36 cm)

Maximum Operating Conditions:

- Maximum Temperature:
  176°F (80°C) @ 30psid (2.1bar)
- Maximum Differential Pressure:
  70psi (4.8bar) @ 77°F (25°C)
  30psi (2.1bar) @ 176°F (80°C)

Recommended Operating Conditions:

- Flow Rate:
  Up to 175gpm (662 LPM)/ 20˝ element
  Up to 350gpm (1325 LPM)/ 40˝ element
  Up to 500gpm(1892 LPM)/ 60˝ element
- Change-out Pressure:
  35psid (2.41bar)

Ordering Information

[ ] [ ] — [ ] [ ] PP

Cartridge Code	
Code	Description
RSCP*	Polypropylene
RSMG**	Glass

*Avail. in all micron sizes
**Avail. in all micron sizes except 90 micron

Micron Rating	
Code	µm
008	0.8
010	1.0
030	3.0
045	4.5
100	10
200*	20
400*	40
900	90

*Non-FDA compliant in glass only

Length	
Code	Inches
20	20˝ (50.8 cm)
40	40" (101.6 cm)
60	60" (152.4 cm)

Seal Material	
Code	Description
E	EPDM
N	Buna-N
S	Silicon
V	Viton®

End Cap Configuration	
Code	Description
PP	435 O-ring/Closed

Specifications are subject to change without notification.
For User Responsibility Statement, see www.parker.com/safety

© 2017 Parker-Hannifin Corporation
Industrial Process Filtration - North America
All Rights Reserved

Fulflo is a registered trademark of Parker-Hannifin Corporation
Viton is a registered trademark of E. I. duPont de Nemours & Co.

Depth Media Filter Cartridges
Melt Blown | Resin Bonded | Wound Depth

Avasan™ Filter Cartridge
High-purity melt blown depth cartridges

Fulflo® DuraBond™ Filter Cartridge
Economical filtration with high strength, thermally-bonded depth cartridges

Fulflo® Honeycomb™ Filter Cartridge
Multi-purpose filtration solutions with wound depth cartridges

Fulflo® MegaBond Nominal™ Filter Cartridge
High-purity filtration with low-cost melt blown depth filter cartridges

Fulflo® MegaBond Plus™ Filter Cartridge
Depth cartridge for high dirt-holding capacity and absolute-rated filtration efficiency

Fulflo® ProBond™ Filter Cartridge
Patented break-through in resin-bonded cartridge design

Fulflo® SWC Filter Cartridge
Economical filtration solutions with string-wound depth cartridges

Fulflo® XTL™ Filter Cartridge
Technologically advanced wound cartridge design for doubled cartridge life and improved performance

Toll free sales & technical support:
940.325.2575
industrialprocess.na@parker.com

Avasan™ Filter Cartridges

High-purity melt blown depth cartridges

Avasan™ (AVS) cartridges are manufactured with a proprietary melt blown manufacturing process using a specially formulated polypropylene polymer. This formulation provides a uniquely graded density filter cartridge designed for high purity applications. The fiber matrix of the cartridge has been engineered to provide structural integrity throughout the long service life of the cartridge and the finish-free construction provides optimum fluid purity and eliminates foaming. Avasan's inherent fluid compatibility properties plus graded density make it the economical filter choice for high clarity requirements.

Contact Information

Parker Hannifin Corporation
Bioscience Division - N.A.
2340 Eastman Avenue
Oxnard, CA 93030

phone +1 805 604 3583
bioscience.na@parker.com

www.parker.com/bioscience

Benefits

- Continuous bonding of fibers throughout the filter matrix ensures non-fiber releasing construction
- Superior inter-layer bonding provides true three dimensional filtration & a construction that does not compress with increasing pressure
- Pure polypropylene construction
- Finish-free construction provides optimum fluid purity and eliminates foaming
- Graded density construction provides built-in pre-filtration and longer life
- All materials of construction are FDA listed as acceptable for potable and edible liquid contact according to CFR Title 21

Applications

- DI Water
- R.O. Pre-filtration
- Potable Water
- Plating Solutions
- Chemical Processing Fluids

ENGINEERING YOUR SUCCESS.

Avasan™ Filter Cartridges

SPECIFICATIONS

Materials of Construction

Filter Medium
100% melt blown polypropylene

End Caps/Adapters (optional)
Various; refer to Ordering Information

Seal Options
Various; refer to Ordering Information

- All materials of construction are FDA listed as acceptable for potable and edible liquid contact according to CFR Title 21.

- Pending Certifications:
  NSF - Materials only

Maximum Recommended Operating Conditions

Temperature
@ 50psid (3.45bar): 80°F (27°C)
@ 25psid (1.72bar): 140°F (60°C)

Flow Rate
5gpm (18.9 lpm) per 10" length

Recommended Maximum
Change Out ΔP: 35psi (2.4bar)

Dimensions (Nominal)

1-1/16 in. (27mm) ID x 2-7/16 in. (62mm) OD (max.)

4, 10, 20, 30, and 40 in. continuous nominal lengths

Nominal Filtration Ratings (90%)

1µm, 3µm, 5µm, 10µm, 20µm, 30µm, 50µm and 75µm

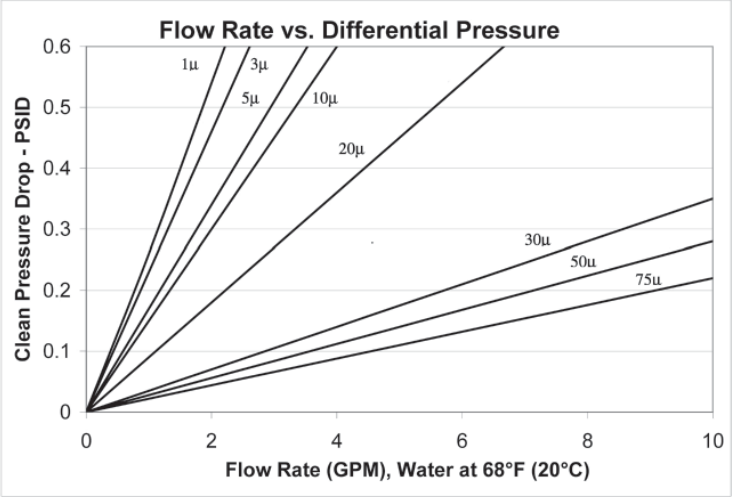

Flow rate is per 10" cartridge. For liquids other than water, multiply the pressure drop by the fluid viscosity in centipose.

Ordering Information

AVS [ ] **M** [ ] — [ ] — [ ]

Cartridge Code	
AVS	AVS Cartridge

Micron Rating
1
3
5
10
20
30
50
75

Nominal Length		
CODE	INCHES	MM
4	4	102
9.75	9.75	248
10	10	254
19.5	19.5	495
20	20	508
29.25	29 ¼	743
30	30	762
39	39	991
40	40	1016

End Cap Configuration	
CODE	DESCRIPTION
None	Double Open End (DOE) w/o gaskets
DO	DOE
LL	120 O-ring both ends**
LR	120 O-ring/Recessed**
OB	Std. open end/Polypropylene spring closed end
PR	213 O-ring/Recessed**
SC	226 O-ring/Flat
SF	226 O-ring/Fin
TB	222 Open end, poly spring closed end
TC	222 O-ring/Flat
TF	222 O-ring/Fin
TX	222 O-ring/Flex fin
XA	DOE w/extended core
XB	Ext. core open end polypropylene spring closed end

Seal Material	
CODE	MATERIAL
None	Omit
A	Poly foam gaskets w/ collars (DO only)
E	EPR
N	Buna-N
S	Silicone (o-ring only)
T	PFA Encapsulated Viton® (222, 226 O-ring only)
V	Viton®
W	Poly foam gaskets w/o collars (DO only)

**Available only in 9-¾" and 19-½" lengths.

Specifications are subject to change without notification.
For User Responsibility Statement, see www.parker.com/safety

© 2017 Parker-Hannifin Corporation
Bioscience Division - North America
All Rights Reserved

Viton is a registered trademark of E.I. DuPont de Nemours & Co., Inc.

Fulflo® DuraBond™ Cartridges

Economical filtration with high strength, thermally-bonded depth cartridges

Parker's Fulflo® DuraBond™ cartridges are the most economical high strength filter cartridges available. Featuring an integral rigid thermally bonded construction, the DuraBond provides consistent filtration for a wide variety of fluids. Its fixed pore structure acts as a sieve-like particle "classification" filter for pigmented coatings allowing pigments to pass while stopping large agglomerates.

DuraBond cartridges are available in nominal ratings of 1µm, 3µm, 5µm, 10µm, 25µm, 50µm, 75µm and 100µm.

Contact Information

Parker Hannifin Corporation
Bioscience Division - N.A.
2340 Eastman Avenue
Oxnard, CA 93030

phone +1 805 604 3583
bioscience.na@parker.com

www.parker.com/bioscience

Benefits

- Fixed pore structure provides efficiency, integrity and optimum particle retention
- Thermally bonded bi-component fiber matrix provides rigid dimensionally stable construction without fiber migration
- Rigid construction eliminates contaminant unloading and channeling
- Corrugated porous surface maximizes dirt holding capacity
- Silicone-free construction
- FDA grade polypropylene (DOE only) certified to ANSI/NSF61 standard for contact with drinking water components
- All materials of construction are FDA listed as acceptable for potable and edible liquid contact according to CFR Title 21
- Polyolefin construction provides broad chemical compatibility for a variety of applications Easily disposed by shredding, incinerating or crushing
- Construction provides particle "classification" effect with pigmented coatings
- Double-open-end style is self-sealing without separate gasket material
- ISO 9001 registered company

Applications

- Photographic Chemicals
- DI Water
- Plating Solutions
- Bleach
- RO Pre-filtration
- Organic Solvents
- Oil Field Fluids
- Membrane Pre-filtration
- Industrial Coatings
- Magnetic Coatings
- Potable Water
- Process Fluids

ENGINEERING YOUR SUCCESS.

Fulflo® DuraBond™ Cartridges

SPECIFICATIONS

Materials of Construction

- Filter Medium:
  Thermal Bonded bi-component matrix of polypropylene/ polyethylene
- End Caps/Adapters (optional):
  Polyolefin copolymer
- Seal Options:
  Various; refer to Ordering Information

Dimensions

1-1/16 in (27mm) ID x 2-7/16 (62mm) in OD
10, 20, 30, 40, and 50 in. continuous nominal lengths

Maximum Recommended Operating Conditions

- Temperature: 175°F (80°C)
- Pressure:
  - 100psid (6.8bar)@72°F (27°C)
  - 50psid (3.4bar)@175°F (80°C)
- Flow rate:
  5gpm (18.9 lpm) per 10 in. length
- Change-out ΔP: 30psi (2.1bar)

Nominal Filtration Ratings (90% efficiency)

1, 3, 5, 10, 25, 50, 75, 100 µm

DBC Flow Factors

Rating (µm)	Aqueous Service psi/gpm per 10 in cartridge
DBC1	0.109
DBC3	0.087
DBC5	0.073
DBC10	0.058
DBC25	0.031
DBC50	0.022
DBC75	0.015
DBC100	0.012

DBC Length Factors

Length (in)	Length Factor
9.75	1.0
10.00	1.0
19.50	2.0
20.00	2.0
29.25	3.0
30.00	3.0
39.00	4.0
40.00	4.0
50.00	5.0

Flow Rate and Pressure Drop Formulas

Flow Rate (gpm):

$$\frac{\text{Clean } \Delta P \times \text{Length Factor}}{\text{Viscosity} \times \text{Flow Factor}}$$

Clean ΔP:

$$\frac{\text{Flow Rate} \times \text{Viscosity} \times \text{Flow Factor}}{\text{Length Factor}}$$

1. Clean ΔP ispsi differential at start.
2. Viscosity is centistokes. Use Conversion Tables for other units.
3. Flow Factor is ΔP/GPM at 1cks for 10 in. (or single).
4. Length Factors convert flow or ΔP from 10 in. (single length) to required cartridge length.

Liquid Particle Retention Ratings (µm) @ Removal Efficiency of:

Cartridge	ß=1000 | 99.9%	ß=100 | 99%	ß=20 | 95%	ß=10 | 90%
DBC1	5	4	2	1
DBC3	10	8	4	3
DBC5	20	16	10	5
DBC10	30	25	15	10
DBC25	55	50	30	25
DBC50	90	80	70	50
DBC75	>100	>100	100	75
DBC100	>100	>100	>100	100

Beta Ratio (ß) = Upstream Particle Count @ Specified Particle Size and Larger / Downstream Particle Count @ Specified Particle Size and Larger

Percent Removal Efficiency = $\left(\frac{ß-1}{ß}\right) \times 100$

Performance determined per ASTM F-795-88. Single-Pass Test using AC test dust in water at a flow rate of 2.5gpm per 10 in (9.5 lpm per 254 mm).

Ordering Information

DBC [ ] **M** [ ] — [ ] — [ ]

Cartridge Code	
DBC	DuraBond

Micron Rating
1
3
5
10
25
50
75
100

Nominal Length		
CODE	IN.	mm
9-4	9-¾	248
10	10	254
19-4	19-½	495
20	20	508
29-4	29-¼	743
30	30	762
39-4	39	991
40	40	1016
50	50	1270

End Cap Configuration	
CODE	DESCRIPTION
None	Double Open End (DOE) w/o gaskets
AR	020 Flat (Gelman)
DO	DOE
LL	120 O-ring both ends**
LR	120 O-ring/Recessed**
OB	Std. open end/Polypropylene spring closed end
PR	213 O-ring/Recessed**
SC	226 O-ring/Flat
SF	226 O-ring/Fin
TB	222 Open end, poly spring closed end
TC	222 O-ring/Flat
TF	222 O-ring/Fin
TX	222 O-ring/Flex fin
XA	DOE w/extended core
XB	Ext. core open end polypropylene spring closed end

Seal Material	
CODE	MATERIAL
None	No Seal Mat. (Std. DOE)
A	Poly foam gaskets w/collars (DO only)
E	EPR
N	Buna-N
S	Silicone (O-ring only)
T	PFA Encapsulated Viton® (222, 226 O-ring only)
V	Viton®
W	Poly foam gaskets w/o collars (DO only)

**Available only in 9-¾" (9-4) and 19-½" (19-4) lengths.

Specifications are subject to change without notification.
For User Responsibility Statement, see www.parker.com/safety

© 2017 Parker-Hannifin Corporation
Bioscience Division - North America
All Rights Reserved

Fulflo is a registered trademark of Parker-Hannifin Corporation
Viton is a registered trademark of E.I. DuPont de Nemours & Co., Inc.

Fulflo® Honeycomb™ Filter Cartridges

Multi-purpose filtration solutions with wound depth cartridges

Parker has been a leader in filter media innovation and performance since we first invented the Honeycomb™ Filter Tube over 65 years ago. Parker has the world's largest manufacturing capacity for wound cartridges, offering superior quality along with technical, engineering and marketing support.

Effective removal ratings at nominal 90% efficiency from 0.5µm to 150µm.

Contact Information

Parker Hannifin Corporation
Industrial Process Filtration - N.A.
118 Washington Avenue
Mineral Wells, TX 76067

phone +1 940 325 2575
industrialprocess.na@parker.com

www.parker.com/industrialprocess

Benefits

- A broad range of media provide excellent compatibility with a variety of organic solvents, animal, petroleum and vegetable oils
- Optional core covers and end treatments assure fiber migration control
- Multiple length cartridges minimize change-out time, eliminate spacers and are available to fit competitive filter vessels
- FDA grade polypropylene (DOE only) cartridges certified to ANSI/NSF61 standard for contact with drinking water components
- Continuous strand winding geometry provides performance consistency
- One-piece metal extended center core option eliminates the need for cartridge guides in all competitive and Fulflo® multi-cartridge vessels
- A special snap-in extender is available for polypropylene cores
- Cotton, polypropylene, nylon and polyester materials are FDA listed as acceptable for potable and edible liquid contact according to CFR Title 21
- O-ring/end cap options available
- ISO 9001 registered company

Applications

- Oxidizing Agents
- Concentrated
- Alkalies
- Potable Liquids
- Dilute Acids & Alkalies
- Mineral Acids
- Organic Acids & Solvents
- Petroleum Oils
- Photo Solutions
- Amines
- Water
- Prefilter for Membranes

ENGINEERING YOUR SUCCESS.

Fulflo® Honeycomb™ Cartridges

Wound Depth Cartridge Design and Function

Wound cartridges provide true depth filtration utilizing hundreds of tapered filtering passages of controlled size and shape. Each layer of roving contributes to true depth filtration by trapping its share of particles. Wound cartridges offer a gradual pressure increase during cartridge life versus surface-type media that have an abrupt flow cutoff when loaded. In addition, the irregular outer layer reduces surface blinding, assuring both longer cartridge life and full cartridge utilization.

Ultrafine Wound Depth Cartridges for Critical Filtration Applications

Ultrafine cartridges are a unique member of the Honeycomb™ wound depth cartridge family. They are specifically designed for critical filtration applications in the 0.5µm range. When absolute 0.5µm filtration is required, the nominal Ultrafine cartridge can be used as a prefilter, thereby significantly extending membrane life. Ultrafine cartridges remove 90% of particles larger than 0.5µm in size. This type of filtration provides excellent protection for equipment or processes that must be protected from fine particles.

Applications include:

- Prefilter for membranes
- Rinse water in semiconductor manufacturing
- Fine filtration for ultrasonic parts, washer solvents and other high-purity solvents
- Prefilter for industrial reverse osmosis equipment

Ordering Information (Ultrafine Wound Depth Cartridge)

Filter Medium	
Code	**Description**
C	FDA Grade Cotton
E	FDA Grade Rayon
M	FDA Grade Polypropylene
T	Industrial Grade Polypropylene
WC	Industrial Grade White Cotton

Nominal Length	
Code	**Size (Inches)**
9-4	9-⅞
10	10
19-4	19-½
20	20
29-4	29-¼
30	30-9/16
39-4	39
40	40-9/16

Core Material	
Code	**Description**
None	Tinned Steel
A	Polypropylene
A3	Glass-filled Polypropylene
G	304 Stainless Steel
S	316 Stainless Steel

Core Cover Material	
Code	**Description**
None	Glass paper with polyester overlay
B	Nylon
V	Non-woven Polyester
Y	Polypropylene

End Cap Configuration	
Code	**Description**
None	DOE (w/o gaskets)
DO	DOE (w/ gaskets)
OB	Std. Open End/ Polypro Spring Closed End
TB	222/Open end/ Polypro Spring Closed End
TC	222/Closed
TF	222/Fin
TX	222/Flex fin
SC	226/Closed
SF	226/Fin
SX	226/Flex fin
XA	Polypro Extender
XB	Extended Core Open End/Polypro Spring Closed End
XC	Extended Metal

Seal Material	
Code	**Material**
None	Std. DOE
A	Polyfoam
E	EPDM
N	Buna-N
S	Silicone
T	Teflon Encapsulated Viton®
V	Viton®

Specifications are subject to change without notification.
For User Responsibility Statement, see www.parker.com/safety

© 2010 Parker-Hannifin Corporation
domnick hunter Process Filtration - North America
All Rights Reserved
Fulflo is a registered trademark of Parker-Hannifin Corporation
Viton is a registered trademark of E.I. DuPont de Nemours & Co., Inc.

Fulflo® Honeycomb™ Cartridges

Wound Cartridge Flow Factors for Aqueous (Water-based) Fluids (psid/gpm @ 1cks)

Rating (µm)	Polypropylene Polyester Nylon	Cotton Rayon	Glass
0.5	0.9924	2.6590	0.5000
1	0.7463	2.0000	0.4211
3	0.3330	0.6250	0.3478
5	0.2381	0.3636	0.1951
10	0.1429	0.1931	0.1430
20	0.0898	0.1075	0.1096
30	0.0704	0.0855	0.0816
50	0.0595	0.0709	0.0678
75	0.0538	0.0645	0.0611
100	0.0500	0.0624	0.0590

Wound Cartridge Flow Factors for Non-Aqueous (Solvent or Oil based) Fluids (psid/gpm @ 1cks)

Rating (µm)	Polypropylene Polyester Nylon	Cotton Rayon	Glass
0.5	1.8350	1.3800	0.5000
1	1.0000	0.7519	0.4211
3	0.5800	0.3003	0.3478
5	0.3003	0.1949	0.1951
10	0.1299	0.1000	0.1430
20	0.0560	0.0350	0.1096
30	0.0200	0.0175	0.0816
50	0.0141	0.0130	0.0678
75	0.0120	0.0100	0.0611
100	0.0080	0.0065	0.0590

Wound Cartridge Nominal Micrometer Ratings

Cartridge Designation									Micron Rating	Compressed Air & Gas Micron Rating
8R	E8R	N8R	U8R	S8R	M8R	R8R	T8R	WC8R	100	15
10R	E10R	N10R	U10R	S10R	M10R	R10R	T10R	WC10R	75	13
11R	E11R	N11R	U11R	S11R	M11R	R11R	T11R	WC11R	50	12
12R	E12R	N12R	U12R	S12R	M12R	R12R	T12R	WC12R	40	-
13R	E13R	N13R	U13R	S13R	M13R	R13R	T13R	WC13R	30	10
15R	E15R	N15R	U15R	S15R	M15R	R15R	T15R	WC15R	20	7
17R	E17R	N17R	U17R	S17R	M17R	R17R	T17R	WC17R	15	5
19R	E19R	N19R	U19R	S19R	M19R	R19R	T19R	WC19R	10	3
21R	E21R	N21R	U21R	S21R	M21R	R21R	T21R	WC21R	7	-
23R	E23R	N23R	U23R	S23R	M23R	R23R	T23R	WC23R	5	2
27R	E27R	N27R	U27R	S27R	M27R	R27R	T27R	WC27R	3	1
39R	E39R	N39R	U39R	S39R	M39R	R39R	T39R	WC39R	1	Less than 1
Ultrafine (C, E, M, T, WC)									0.5	Less than 0.5

Wound Cartridge Length Factors

Length (in)	Length Factor
10	1.0
20	2.0
30	3.0
40	4.0
50	5.0

Flow Rate and Pressure Drop Formulae:

$$\text{Flow Rate (gpm)} = \frac{\text{Clean } \Delta P \times \text{Length Factor}}{\text{Viscosity} \times \text{Flow Factor}}$$

$$\text{Clean } \Delta P = \frac{\text{Flow Rate} \times \text{Viscosity} \times \text{Flow Factor}}{\text{Length Factor}}$$

Notes:
1. Clean ΔP ispsi differential at start.
2. Viscosity is centistokes.
   Use Conversion Tables for other units.
3. Flow Factor is ΔP/GPM at 1cks
   for 10 in (or single).
4. Length Factors convert flow or ΔP from 10 in (single length) to required cartridge length.

Nominal Removal Ratings:
- @ 90% efficiency from 0.5µm to 150µm

Maximum Recommended Operating Conditions:
- Change Out ΔP: 30psi (2.1bar)
- ΔP @ Ambient Temperature: 60psi (4.1bar)
- Flow Rate: 10gpm (38 lpm) per 10 in. length
- Temperature
  (See Max. Operating Temp.table)

Dimensions:
- 1 in. ID x 2-7/16 OD
- 3 in. to 50 in. lengths

Specifications are subject to change without notification.
For User Responsibility Statement, see www.parker.com/safety

© 2017 Parker-Hannifin Corporation
Industrial Process Filtration - North America
All Rights Reserved

Fulflo® Honeycomb™ Cartridges

Wound Cartridge Baked Glass Fiber Nominal Micrometer Ratings

Cartridge Designation	Liquids	Compressed Air & Gases
K5B	100 - 150	100+
K5R	75 - 100	10
K6R	40	7
K8R	30	5
K10R	20	3
K12R	15	1
K15R	10	<1
K19R	5	<1
K23R	3	<1
K27R	1	<1
K39R	0.5	<1

Note: All glass cartridges have standard glass core cover.

Maximum Operating Temp. @ 35psid

Cartridge Material	304/316 SS Metal Core	Polypropylene Core	Glass-Filled Polypropylene
Cotton	250°F (121°C)	120°F (49°C)	—
Glass	750°F (402°C)	—	—
Nylon	275°F (135°C)	120°F (49°C)	—
Polypropylene	200°F (93°C)	120°F (49°C)†	200°F (93°C)
Polyester	275°F (135°C)	120°F (49°C)	—
Rayon	250°F (121°C)	120°F (49°C)	—

Note: Refer to Materials Selection Guide for additional compatibility information.

Ordering Information (Standard Wound Depth Cartridge)

Filter Medium

Code	Description
None	Cotton (FDA)
E	FDA Grade Rayon
K*	Baked Glass Fiber
M	FDA Grade Polypropylene
N	Nylon (FDA)
S	Polyester (FDA)
T	Industrial Grade Polypropylene
U	Natural Cotton
UK	Unbaked Glass Fiber
WC	White Cotton

*Poly wrap packaging is standard. Additional pricing applies for other packaging options.

Density

Code	Micron
6R	150
8R	100
10R	75
11R	50
12R	40
13R	30
14R	25
15R	20
17R	15
19R	10
21R	7
23R	5
27R	3
39R	1

Nominal Length

Code	Size (Inches)
3	3
4	4
5	5
6	6
7	7
8	8
9-4	9-⅞
10	10
19-4	19-½
20	20
29-4	29-¼
30	30-3/16
39-4	39
40	40-3/16
50	50

Nominal Cartridge Diameter

Code	Description
None	1" ID x 2-7/16" OD
-2	1" ID x 2-11/16" OD
-45	1" ID x 4-½" OD (9-⅞" and 20" length only) for Fulflo LTG and Ametek Big Blue Vessels

Core Material

Code	Description
None	Tinned Steel
A	Polypropylene
A3	Glass-filled Polypropylene
G	304 Stainless Steel
S	316 Stainless Steel
SR	Passivated 316 Stainless Steel (Special Order)

End Treatment

Code	Description
None	No Treatment
D	Sodium Silicate
L	Laquer
M	Singed

Core Cover Material

Code	Description
None	No Cover
B	Nylon
V	Non-woven Polyester
W	Cellulosic Paper
Y	Polypropylene

End Cap Configuration

Code	Description
None	DOE- Double open end (w/o gaskets)
DO	DOE (w/ gaskets)
OB	Std. Open End/ Polypro Spring Closed End
TB	222/Open End/ Polypro Spring Closed End
TC	222/Closed
TF	222/Fin
TX	222/Flex fin
SC	226/Closed
SF	226/Fin
XA	Polypro Extender
XB	Extended Core Open End/Polypro Spring Closed End
XC	Extended Metal

Seal Material

Code	Material
None	Std. DOE
A	Polyfoam
E	EPDM
N	Buna-N
S	Silicone
T	Teflon Encapsulated Viton®
V	Viton®

Packaging Options

Code	Description
Z	Individual Poly Bag
TIS	Tissue Wrap

Specifications are subject to change without notification.
For User Responsibility Statement, see www.parker.com/safety

© 2010 Parker-Hannifin Corporation
domnick hunter Process Filtration - North America
All Rights Reserved
Fulflo is a registered trademark of Parker-Hannifin Corporation
Viton is a registered trademark of E.I. DuPont de Nemours & Co., Inc.

DS_IP_Honeycomb Rev. D

Fulflo® MegaBond™ Nominal Filter Cartridges

High-purity filtration with low-cost melt blown depth filter cartridges

Fulflo® MegaBond™ Nominal (MBN) cartridges are the most economical high purity filter cartridges available. Featuring a graded density matrix of uniform polypropylene fibers, the MBN provides consistent filtration for a wide variety of fluids. No fiber finish or surfactants are present to generate extractables leading to foaming or other undesirable effects on the filtrate.

Available in nominal ratings of .5, 1, 5, 10, 25, 50 and 75 micron.

Contact Information

Parker Hannifin Corporation
Bioscience Division - N.A.
2340 Eastman Avenue
Oxnard, CA 93030

phone +1 805 604 3583
bioscience.na@parker.com

www.parker.com/bioscience

Benefits

- Thermally bonded melt blown fiber matrix provides dimensionally stable construction
- Continuous fiber matrix prevents media migration and ensures consistent quality filtration performance
- Finish-free construction provides optimum fluid purity and eliminates foaming condition
- Superior inter-layer bonding eliminates contaminant unloading and channeling
- FDA grade polypropylene (DOE only) designed to conform to ANSI/NSF42 & NSF61 standards
- Narrow range fiber size optimizes consistency of filtration performance
- Polypropylene construction provides broad chemical compatibility for a variety of applications
- All materials of construction are FDA listed as acceptable for potable and edible liquid contact according to CFR Title 21
- Single component construction simplifies compatibility options and provides easy disposal

Applications

- Photographic Chemicals
- DI Water
- Plating Solutions
- R.O. Pre-filtration
- Membrane Pre-filtration
- Organic Solvents
- Oil field Fluids
- Bleach
- Potable Water
- Chemical Processing Fluids

ENGINEERING YOUR SUCCESS.

Fulflo® MegaBond™ Nominal Filter Cartridges

SPECIFICATIONS

Materials of Construction

Filter Medium
100% melt blown polypropylene
End Caps/Adapters (optional)
Polyolefin copolymer
Seal Options
Various; refer to Ordering Information

Maximum Recommended Operating Conditions

Temperature
@ 40psid (2.7bar): 80°F (27°C)
@ 20psid (1.4bar): 140°F (60°C)
Flow Rate
5gpm (18.9 lpm) per 10 in length

Recommended Maximum

Change Out ΔP: 30psi (2.1bar)
Operating Differential Pressure @ Ambient Temperature: 40psi (2.7bar)

Dimensions

1 1/16 in. ID x 2 7/16 in OD (max)
10, 20, 30, 40 and 50 in. continuous nominal lengths

Nominal Filtration Ratings (90%)

.5µm, 1µm, 5µm, 10µm, 25µm, and 50µm

MBN Flow Factors

Rating (µm)	Aqueous Service psi/gpm per 10 in cartridge
MBN05	0.15
MBN1	0.13
MBN5	0.11
MBN10	0.10
MBN25	0.09
MBN50	0.05
MBN75	0.03

MBN Length Factors

Length (in)	Length Factor
9.75	1.0
10.00	1.0
19.50	2.0
20.00	2.0
29.25	3.0
30.00	3.0
39.00	4.0
40.00	4.0
50.00	5.0

Flow Rate and Pressure Drop Formulas

$$\text{Flow Rate (gpm)} = \frac{\text{Clean } \Delta P \times \text{Length Factor}}{\text{Viscosity} \times \text{Flow Factor}}$$

$$\text{Clean } \Delta P = \frac{\text{Flow Rate} \times \text{Viscosity} \times \text{Flow Factor}}{\text{Length Factor}}$$

Notes:
1. Clean ΔP ispsi differential at start.
2. Viscosity is centistokes. Use Conversion Tables for other units.
3. Flow Factor is ΔP/GPM at 1cks for 10 in. (or single).
4. Length Factors convert flow or ΔP from 10 in. (single length) to required cartridge length.

Ordering Information

MBN [ ] **M** [ ] — [ ] — [ ]

Cartridge Code	
MBN	MegaBond Nominal

Micrometer Rating (µm)
.5
1
5
10
25
50

Nominal Length		
Code	Inches	mm
9-4	9¾	248
10	10	254
19-4	19½	495
20	20	508
29-4	29¼	743
30	30	762
39-4	39	991
40	40	1016
50	50	1270
75	75	1905

End Cap Configuration	
Code	Description
None	DOE (w/o gaskets)
AR	020/Flat (Gelman)
DO	DOE
LL	120 O-ring both ends**
LR	120 O-ring/Recessed**
OB	Std. open end/Polypropylene spring closed end
PR	213 O-ring/Recessed**
SC	226 O-ring/Flat
SF	226 O-ring/Fin
TB	222 open end/Polypropylene spring closed end
TC	222 O-ring/Flat
TF	222 O-ring/Fin
TX	222 O-ring/Flex Fin
XA	DOE w/Extended Core
XB	Ext. core open end/Poly-propylene spring closed end

**Available only in 9-¾" (9-4) and 19-½" (19-4) lengths.

Seal Material	
Code	Material
None	No Seal Material (Std. DOE)
A	Poly Foam Gaskets w/ Collars (DO only)
E	EPR
N	Buna-N
S	Silicone
T	PFA Encapsulated Viton® (222, 226 O-ring only)
V	Viton®
W	Poly Foam Gaskets w/o Collars (DO only)

Specifications are subject to change without notification.
For User Responsibility Statement, see www.parker.com/safety

© 2017 Parker-Hannifin Corporation
Bioscience Division - North America
All Rights Reserved

Fulflo is a registered trademark of Parker-Hannifin Corporation
Viton is a registered trademark of E.I. DuPont de Nemours & Co., Inc.

Fulflo® MegaBond Plus™ Cartridges

Depth cartridge for high dirt-holding capacity and absolute-rated filtration efficiency

Parker's Fulflo® MegaBond Plus™ (MBP) are absolute rated depth cartridges. Using a new innovative manufacturing process, the MBP has higher dirt-holding capacities offering long service life without contaminant migration. The MBP has a fixed core inner structure of thermally bonded continuous microfine polypropylene fibers. The modified outer layer fixed pore structure maximizes the graded density surface area to enhance dirt-holding capacity.

Available in absolute (ß = 5000) ratings of 1, 3, 5, 10, 15, 20, 30, 40, 70, 90 and 120 micron.

Benefits

- Microfine, thermally bonded fiber construction provides superior filtration & often eliminates the need for circulation to achieve product clarity
- Non-fiber-releasing, continuous fiber matrix prevents media migration and ensures consistent production yields and overall quality filtration performance
- No surfactants or binders are present to interrupt product quality or cause foaming
- Double open-end cartridges have polyolefin gaskets thermally bonded to both ends eliminating fluid bypass between the cartridge and the vessel seal
- Superior inter-layer bonding eliminates contaminant unloading and channeling
- Unique outer graded density structure increases dirt holding capacity
- Polypropylene fiber provides broad chemical compatibility for a variety of applications
- All materials of construction are FDA listed as acceptable for potable and edible liquid contact according to CFR Title 21
- Pore size differentiation is achieved using fibers of differing diameters and maintaining uniform density throughout the cartridge
- Pore sizes do not change as DP increases during service, providing consistent particle retention
- ISO 9001 registered company

Contact Information

Parker Hannifin Corporation
Bioscience Division - N.A.
2340 Eastman Avenue
Oxnard, CA 93030

phone +1 805 604 3583
bioscience.na@parker.com

www.parker.com/bioscience

Applications

- Photographics
- High Technology Coatings
- DI Water
- Plating Solutions
- Chemical Processing
- Membrane Prefiltration
- Food & Beverage

ENGINEERING YOUR SUCCESS.

Fulflo® MegaBond Plus™ Cartridges

SPECIFICATIONS

Materials of Construction

Polypropylene:
Microfiber 100% melt blown construction
Center Support Core/End Caps:
Natural polypropylene
Thermally Bonded Gaskets:
Polyolefin closed cell foam (DOE only)

Maximum Recommended Operating Conditions

Temperature:
@ 60psid (4.1bar): 80°F (27°C)
@ 35psid (2.4bar): 160°F (71°C)
@ 15psid (1.0bar): 200°F (93°C)
Flow Rate:
5gpm (18.9 lpm) per 10 in length

Recommended Maximum

Change Out ΔP: 35psi (2.4bar)
Operating Pressure @ Ambient Temperature: 60psid (4.1bar)

Dimensions

1 in ID x 2-9/16 in OD 10, 20, 30 and 40 in continuous nominal lengths

Absolute Filtration Ratings

1µm, 3µm, 5µm, 10µm, 15µm, 20µm, 30µm, 40µm, 70µm, 90µm and 120µm

Beta Ratio (ß) =

$$\frac{\text{Upstream Particle Count @ Specified Particle Size and Larger}}{\text{Downstream Particle Count @ Specified Particle Size and Larger}}$$

$$\text{Percent Removal Efficiency} = \left(\frac{\beta-1}{\beta}\right)100$$

Performance determined per ASTM F-795-88. Single-Pass Test using AC test dust in water at a flow rate of 3.5gpm per 10 in (13.2 lpm per 254 mm) cartridge.

MBP Flow Factors (psid/gpm @ 1 cks)

Rating (µm)	Flow Factor
MBP1	2.17
MBP3	1.60
MBP5	0.90
MBP10	0.32
MBP15	0.16
MBP20	0.12
MBP30	0.10
MBP40	0.05
MBP70	<0.05
MBP90	<0.04
MBP120	<0.03

MBP Length Factors

Length (in)	Length Factor
9.75	1.0
10.00	1.0
19.50	2.0
20.00	2.0
29.25	3.0
30.00	3.0
39.00	4.0
40.00	4.0

Flow Rate and Pressure Drop Formulas

$$\text{Flow Rate (gpm)} = \frac{\text{Clean } \Delta P \text{ x Length Factor}}{\text{Viscosity x Flow Factor}}$$

$$\text{Clean } \Delta P = \frac{\text{Flow Rate x Viscosity x Flow Factor}}{\text{Length Factor}}$$

Notes:
1. Clean ΔP is psi differential at start.
2. Viscosity is centistokes. Use Conversion Tables for other units.
3. Flow Factor is ΔP/GPM at 1cks for 10 in. (or single).
4. Length Factors convert flow or ΔP from 10 in. (single length) to required cartridge length.

Liquid Particle Retention Ratings (µm) @ Removal Efficiency of:

Cartridge	ß=5000 Absolute	ß=1000 | 99.0%	ß=100 | 99%	ß=50 | 98%	ß=10 | 90%
MBP1	1	0.9	0.5	0.4	0.2
MBP3	3	2.8	1.9	1.7	0.8
MBP5	5	3.7	2.3	1.6	1.2
MBP10	10	9.1	8.0	7.8	6.7
MBP15	15	12.0	9.6	8.9	7.2
MBP20	20	18.3	13.0	12.5	8.7
MBP30	30	25.0	20.0	18.0	13.0
MBP40	40	35.0	28.0	25.0	18.0
MBP70	70	60.0	48.0	42.0	30.0
MBP90	90	80.0	72.0	63.0	48.0
MBP120	120	105.0	95.0	85.0	70.0

Ordering Information

MBP [ ] **M** [ ] [ ] **—** [ ] **—** [ ]

Cartridge Code

MBP	MegaBond Plus

Micron Rating

1
3
5
10
15
20
30
40
70
90
120

Nominal Length

CODE	INCHES
9-4	9¾
10	10
19-4	19½
20	20
29-4	29¼
30	30
39-4	39
40	40

Support Construction

CODE	MATERIAL
N	Polypropylene
G	304 SS (Core Only)

End Cap Configuration

CODE	DESCRIPTION	CODE	DESCRIPTION
None	Std. Double Open End (DOE) / Polyfoam	SSC	SS inserted 226 O-ring/Closed
AR	020/Flat (Gelman)	SSF	SS inserted 226 O-ring/Fin
DO	DOE	STC	SS inserted 222 O-ring/Closed
DX	DOE with Polypro extender	STF	SS inserted 222 O-ring/Fin
LL	120 O-ring both ends**	TC	222 O-ring/Flat
LR	120 O-ring/Recessed**	TF	222 O-ring/Fin
OB	Std. open end/Polypropylene spring closed end	TX	222 O-ring/Flex Fin
PR	213 O-ring/Recessed**	XA	DOE w/Extended Core
SC	226 O-ring/Flat	XB	Ext. core open end/Polypropylene spring closed end
SF	226 O-ring/Fin		

**Available only in 9¾" (9-4) and 19½" (19-4) lengths.

Seal Material

CODE	MATERIAL
None	Polyfoam (DOE only)
E	EPR
N	Buna-N
S	Silicone
T	PFA Encapsulated Viton® (222, 226 O-ring only)
V	Viton®

Specifications are subject to change without notification.
For User Responsibility Statement, see www.parker.com/safety

© 2017 Parker-Hannifin Corporation
Bioscience Division - North America
All Rights Reserved

Fulflo is a registered trademark of Parker-Hannifin Corporation
Viton is a registered trademark of E.I. DuPont de Nemours & Co., Inc.

Fulflo® ProBond™ Filter Cartridges

Patented break-through in resin-bonded cartridge design

Parker ProBond™ cartridges have a unique, proprietary two-stage filtration design to maximize particle retention and service life in viscous fluid filtration applications. An outer, spiral, prefilter wrap, made from a fiber blend of polyester and acrylic, increases cartridge strength and eliminates residual debris associated with conventional or machined and grooved, resin bonded cartridges.

ProBond filter cartridges are available in eight differentiated removal ratings of 2µm, 5µm, 10µm, 25µm, 50µm, 75µm, 125µm and 150µm pore sizes to meet a wide range of performance requirements.

Contact Information

Parker Hannifin Corporation
Industrial Process Filtration - N.A.
118 Washington Avenue
Mineral Wells, TX 76067

phone +1 940 325 2575
industrialprocess.na@parker.com

www.parker.com/industrialprocess

Benefits

- Outer, spiral wrap collects large particles and agglomerates, while inner layers control particle removal at rated size
- Outer wrap increases surface area, & eliminates loose debris and contamination caused by machined products
- Extra-long acrylic fibers provide added strength, resist breakage and migration common with competitive “short fiber” cartridges
- Available with optimal single-open-end seals (222 o-ring with flat cap) in ABS or nylon
- Phenolic resin impregnation strengthens cartridge for use with high viscosity fluid
- Withstands pressure surges up to 150psid across cartridge (depending on fluid temperature)
- One-piece construction eliminates bypass concerns with multi-length cartridges and eases change out
- Silicone-free construction ensures no contamination to adversely affect adhesion properties of coatings
- ISO 9001 registered company

Applications

- Paints
- Printing Inks
- Adhesives
- Resins
- Emulsions
- Chemical Coatings
- Organic Solvents
- Plasticizers
- Waxes
- Oil & Gas Fluids
- Petroleum Products

ENGINEERING YOUR SUCCESS.

Fulflo® ProBond™ Filter Cartridges

SPECIFICATIONS

Materials of Construction

1st stage Pre-filter wrap:

- Polyester/Acrylic long staple fiber blend

2nd stage Final Filter wrap:

- Acrylic long staple fiber
- Fibers impregnated with Phenolic Resin

Type of Construction

Coreless, one-piece, rigid resin bonded fibrous matrix

Maximum Recommended Operating Conditions

- Flow Rate: 5gpm per 10 in length (18.9 lpm per 254 mm length)
- Temperature: 250°F (121°C)
- Maximum Recommended Change Out ΔP: 50psid (3.5bar)
- Recommended Maximum Differential Pressure:
  Cartridge Pressure Resistance
  - 150psid (10bar) @ 70°F (21°C)
  - 125psid (8.6bar) @ 100°F (38°C)
  - 90psid (6.2bar) @ 150°F (65°C)
  - 65psid (4.5bar) @ 180°F (82°C)
  - 25psid (1.7bar) @ 250°F (121°C)

Particle Removal Ratings

2µm, 5µm, 10µm, 25µm, 50µm, 75µm, 125µm and 150µm

Dimensions, in. (mm)

Outside Diameter: 2-9/16 in (65)
Inside Diameter: 1-⅛ in (28.6)
Lengths: Nominal, 10, 20, 30 and 40 in.

Environmental/Chemical Compatibility

Classified as a nonhazardous material

- Incinerable (8000 BTU/lb)
- Crushable and shredable
- Certified silicone-free
- Suitable for weak acids and bases (pH 5-9)
- Unsuitable for oxidizing agents
- Not recommended for FDA applications

End Adapters

- None on double open end style
- ABS (Acrylonitrile Butadiene Styrene) for most applications
- Nylon (NTC) for aromatic solvents

ProBond Flow Factors

Rating (µm)	Flow Factors
2	0.08
5	0.04
10	0.02
25	0.012
50	0.01
75	0.006
125	0.0013
150	0.0010
200	0.0005
250	0.0001

ProBond Length Factors

Length (in)	Length Factors
9	1.0
10	1.0
19	2.0
20	2.0
29	3.0
30	3.0
39	4.0
40	4.0

Flow Rate and Pressure Drop Formulas

$$\text{Flow Rate (gpm)} = \frac{\text{Clean } \Delta P \times \text{Length Factor}}{\text{Viscosity} \times \text{Flow Factor}}$$

$$\text{Clean } \Delta P = \frac{\text{Flow Rate} \times \text{Viscosity} \times \text{Flow Factor}}{\text{Length Factor}}$$

1. Clean ΔP ispsi differential at start.
2. Viscosity is centistokes. Use Conversion Tables for other units.
3. Flow Factor is ΔP/GPM at 1cks for 10 in. (or single).
4. Length Factors convert flow or ΔP from 10 in. (single length) to required cartridge length.

Ordering Information

PRO [ ] – [ ] [ ] – [ ]

Cartridge Code	
PRO	ProBond Series

Micron Rating (µm)
2
5
10
25
50
75
125
150
200
250

Nominal Length		
CODE	IN.	mm
9	9-¾	248
10	10	254
19	19-½	495
20	20	508
29	29-¼	743
30	30	762
39	39	991
40	40	1016

End Cap Configuration	
CODE	DESCRIPTION
None	Std. double open end (DOE) coreless
CXC	Extended tinned steel core
C	Tinned steel core
NTC	Single open end 222 o-ring/Flat cap (Nylon)
OB	Std. open end/Polypropylene spring closed end
TC	Single open end 222 O-ring/Flat cap (ABS Plastic)
XA	Poly extender
XB	Extended core open end/ Polypropylene spring closed end

Seal Material	
CODE	MATERIAL
None	DOE and XA
E	EPR
N	Buna-N
S	Silicone (O-ring only)
T	PFA Encapsulated Viton® (222, 226 O-ring only)
V	Viton®

Specifications are subject to change without notification.
For User Responsibility Statement, see www.parker.com/safety

© 2017 Parker-Hannifin Corporation
Industrial Process Filtration - North America
All Rights Reserved

Fulflo is a registered trademark of Parker-Hannifin Corporation
Viton is a registered trademark of E.I. DuPont de Nemours & Co., Inc.

DS_IP_ProBond Rev A.

Fulflo® SWC Filter Cartridges

Economical filtration solutions with string-wound depth cartridges

The SWC filter cartridge offers a wide range of fibers and core materials. Roving is wound onto a center core for strength. The diagonal pattern of the media forms a tight, interlocking weave. Parker domick hunter Process Filtration has one of the world's largest manufacturing plants for wound cartridges, offering superior quality along with technical, engineering and marketing support.

Nominal removal ratings from 1µm to 100µm are available.

Contact Information

Parker Hannifin Corporation
Industrial Process Filtration - N.A.
118 Washington Avenue
Mineral Wells, TX 76067

phone +1 940 325 2575
industrialprocess.na@parker.com

www.parker.com/industrialprocess

Benefits

- SWC's provide excellent compatibility with a variety of organic solvents and petroleum products
- Optional core covers available to assure fiber migration control
- Multiple length cartridges minimize change out time, eliminate spacers and are available to fit competitive filter vessels
- Cotton and polypropylene materials are FDA listed as acceptable for potable and edible liquid contact according to CFR Title 21
- Continuous strand roving geometry provides performance consistency
- Extended center core option eliminates the need for cartridge guides in competitive and Fulflo multi-cartridge vessels
- One piece extended length center cores are available in tinned steel, 316 stainless steel and 304 stainless steel
- A special snap-in extender is available for polypropylene cores
- FDA grade polypropylene (DOE only) certified to ANSI/NSF61 standard for contact with drinking water components
- ISO 9001 registered company

Applications

- Prefilter for RO Membranes
- Water
- Alkalies
- Dilute Acids & Alkalies
- Organic Acids & Solvents
- Potable Liquids
- Petroleum Oils
- Mineral Acids

ENGINEERING YOUR SUCCESS.

Fulflo® SWC Filter Cartridges

SPECIFICATIONS

Materials of Construction

- Polypropylene
- Cotton

Maximum Recommended Operating Conditions

- Temperature:
  - Polypropylene:
    200°F (93°C) with tinned steel or stainless steel cores; 120°F (49°C) with polypropylene cores
  - Cotton:
    250°F (121°C) with tinned steel or stainless steel cores;120°F (49°C) with polypropylene cores
- Change Out ΔP: 30psi (2.1bar)
- ΔP @ Ambient Temperature: 60psi (4.1bar)
- Flow Rate: 5gpm (18.9 lpm) per 10 in. length

Nominal Removal Ratings

- 90% efficiency from 1µm to 100µm

Dimensions

- 1 in. ID x 2-⅜ in. OD
  10, 20, 30 and 40 in. lengths

SWC Length Factors

Length (in)	Length Factor
10	1.0
20	2.0
30	3.0
40	4.0

Flow Rate and Pressure Drop Formulas

$$\text{Flow Rate (gpm)} = \frac{\text{Clean } \Delta P \times \text{Length Factor}}{\text{Viscosity} \times \text{Flow Factor}}$$

$$\text{Clean } \Delta P = \frac{\text{Flow Rate} \times \text{Viscosity} \times \text{Flow Factor}}{\text{Length Factor}}$$

Notes:
1. Clean ΔP ispsi differential at start.
2. Viscosity is centistokes. Use Conversion Tables for other units.
3. Flow Factor is ΔP/GPM at 1cks for 10 in. (or single).
4. Length Factors convert flow or ΔP from 10 in. (single length) to required cartridge length.

SWC Flow Factors (psid/gpm @ cks)

Rating (µm)	Cotton	All Synthetics
1	2.00	0.75
3	0.63	0.33
5	0.36	0.24
10	0.19	0.14
15	0.16	0.12
20	0.11	0.09
25	0.10	0.08
30	0.09	0.07
50	0.07	0.06
75	0.06	0.05
100	0.06	0.05

Ordering Information

SWC [ ] [ ] [ ] [ ] [ ] [ ] – [ ]

Cartridge Code

Code	Description
SWC	String Wound Cartridge

Micron Rating (Nominal)

Code	Micron
1	1.0
3	3.0
5	5.0
10	10.0
15	15.0
20	20.0
25	25.0
30	30.0
50	50.0
75	75.0
100	100.0

Fiber Type

Code	Material
C	Cotton (FDA Grade)
M	Polypropylene (FDA grade)
T	Polypropylene (Industrial grade)
U	Cotton, natural
WC	White cotton

Nominal Length

Code	Inches
9-4	9⅞
10	10
19-4	19½
20	20
29-4	29¼
30	30 3/16
39-4	39
40	40 3/16

Core Material

Code	Description
None	Tinned Steel
A	Polypropylene
G	304 Stainless Steel
S	316 Stainless Steel

Core Cover Material

Code	Description
None	No Cover
V	Non-woven Polyester
Y	Polypropylene

Core Extender

Code	Description
None	No Extender
OB	Std. Open End/ Polypro Spring Closed End
XA	Snap-in (Polypropylene)
XB	Extended Core Open End/Polypro Spring Closed End
XC	Integral (Tinned Steel 304SS or 316SS)

Packaging Options

Code	Material
Z	Individual Poly Bag

Specifications are subject to change without notification.
For User Responsibility Statement, see www.parker.com/safety

© 2017 Parker-Hannifin Corporation
Industrial Process Filtration - North America
All Rights Reserved

Fulflo is a registered trademark of Parker-Hannifin Corporation

Fulflo® XTL™ Filter Cartridges

Technologically advanced wound cartridge design for doubled cartridge life and improved performance

The unique construction of Parker's patented* Fulflo® XTL™ (extended life) cartridges provides twice the average life of conventionally wound cartridges for process fluid filtration. Computer modeling has optimized the wound cartridge geometry maximizing the use of the internal cartridge surface area. The enhanced design provides improved dirt-holding capacity (twice the average) over standard wound cartridges, while providing true controlled-depth filtration.

Fulflo® XTL cartridges are available in nominal (90%) ratings of 1µm, 3µm, 5µm, 10µm, 20µm and 30µm.

Contact Information

Parker Hannifin Corporation
Industrial Process Filtration - N.A.
118 Washington Avenue
Mineral Wells, TX 76067

phone +1 940 325 2575
industrialprocess.na@parker.com

www.parker.com/industrialprocess

Benefits

- Offer significant cost savings based on fewer system interruptions, decreased change-out labor expenses, reduced inventory and cartridge disposal costs, and extended cartridge life savings
- Unique computer programming capability permits the design and manufacture of special cartridge constructions to suit requirements of nearly any filtration application
- "M" polypropylene and "C" cotton materials of construction are FDA listed as acceptable for potable and edible liquid contact according to CFR Title 21
- Continuous strand roving geometry provides performance consistency
- A special snap-in extender is available for polypropylene cores
- Extended center cores are available in tinned steel, 316 stainless steel and 304 stainless steel
- Fit all Fulflo vessels and most competitive vessels without compromising final product clarity or flow characteristics of the cartridge
- FDA grade polypropylene (DOE only) certified to ANSI/NSF61 standard for contact with drinking water components
- ISO 9001 registered company

Applications

- Potable Liquids
- Organic Solvents
- Process Water
- Photoprocessing
- Lubricants
- R.O. Pre-filtration
- Amines
- Chemical Process

ENGINEERING YOUR SUCCESS.

Fulflo® XTL™ Filter Cartridges

SPECIFICATIONS

Materials of Construction
Polypropylene
Cotton

Maximum Recommended Operating Conditions
Temperature:
Polypropylene:
200°F (93°C) with tinned steel or stainless steel cores;
120°F (49°C) with polypropylene cores;
180°F (82°C) with glass-filled polypropylene cores

Cotton**:**
250°F (121°C) with tinned steel or stainless steel cores;
120°F (49°C) with polypropylene cores;
180°F (82°C) with glass-filled polypropylene cores

Recommended Maximum:
Change Out ΔP: 30psi (2.4bar)
Operating ΔP @ Ambient Temperature: 60psi (4.1bar)
Flow Rate: 5gpm (18.9 lpm) per 10 in. length

Dimensions
1 in. ID x 2 $^{7}/_{16}$ in. OD (nominal) 10, 20, 30 and 40 in. lengths nominal)

Filtration Ratings
1µm, 3µm, 5µm, 10µm, 20µm and 30µm @ 90% nominal efficiency

Flow Rate and Pressure Drop Formulas

$$\text{Flow Rate (gpm)} = \frac{\text{Clean } \Delta P \times \text{Length Factor}}{\text{Viscosity} \times \text{Flow Factor}}$$

$$\text{Clean } \Delta P = \frac{\text{Flow Rate} \times \text{Viscosity} \times \text{Flow Factor}}{\text{Length Factor}}$$

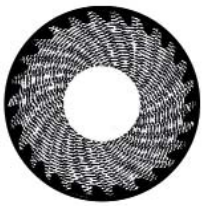

Brand A @ 15psid

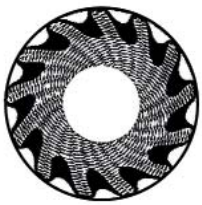

XTL @ 15psid

Most wound cartridges tend to surface load thus preventing the maximum use of their internal surface area. As a result of a unique design and manufacturing process, the XTL cartridge allows the maximum use of its internal surface area. Shown here are illustrations of typical dirt-loading characteristics of a standard wound cartridge and an XTL cartridge at 15psi differential.

Length Factors

Length (in.)	Length Factor
10	1.0
20	2.0
30	3.0
40	4.0
50	5.0

XTL Flow Factors (psid/gpm @ 1cks)

Rating (µm)	Cotton	Polypropylene
1	2.00	0.75
3	0.63	0.33
5	0.36	0.24
10	0.19	0.14
20	0.11	0.09
30	0.09	0.07

Notes:
1. Clean ΔP is psi differential at start.
2. Viscosity is centistokes. Use Conversion Tables for other units.
3. Flow Factor is ΔP/GPM at 1cks for 10 in. (or single).
4. Length Factors convert flow orΔP from 10 in. (single length) to required cartridge length.

Ordering Information

XTL [ ] [ ] [ ] [ ] [ ] [ ] [ ] [ ] [ ] – [ ]

Description

'Extended Life' Wound Cartridge

Micron Rating (Nominal)

Code	Micron
1	1.0
3	3.0
5	5.0
10	10.0
20	20.0
30	30.0

Fiber Type

Code	Material
C	Cotton (FDA Grade)
M	Polypropylene (FDA grade)
T	Polypropylene
WC	White cotton

Nominal Length

Code	Inches
9-4	9-⅞
10	10
19-4	19-½
20	20
29-4	29-¼
30	30
39-4	39
40	40

Core Material

Code	Description
None	Tinned Steel
A	Polypropylene
A3	Glass-filled polypropylene
G	304 Stainless Steel
S	316 Stainless Steel

Core Cover Material

Code	Description
None	No cover
V	Non-woven polyester
Y	Polypropylene

End Treatment

Code	Description
None	No treatment
L	Laquer
M	Singed

End Cap Configuration

Code	Description
None	DOE- Double open end (w/o gaskets)
DO	DOE
OB	Std. Open End/ Polypro Spring Closed End
TB	222 Open End/ Polypro Spring Closed End
TC	222 O-ring/Flat
TF	222 O-ring/Fin
TX	222 O-ring/Flex fin
SC	226 O-ring/Flat
SF	226 O-ring/Fin
XA	Polypro/Extender
XB	Extended Core Open End/Polypro Spring Closed End
XC	Metal extender

Seal Material

Code	Material
None	Std. DOE
A	Polyfoam
E	EPDM
N	Buna-N
S	Silicone
V	Viton®

Packaging Options

Code	Material
Z	Individual Poly Bag

Specifications are subject to change without notification.
For User Responsibility Statement, see www.parker.com/safety

© 2017 Parker-Hannifin Corporation
Industrial Process Filtration - North America
All Rights Reserved

Fulflo is a registered trademark of Parker-Hannifin Corporation
Viton is a registered trademark of E.I. DuPont de Nemours & Co., Inc.

DS_IP_XTL Rev. C

Filter Bags and Strainers

Fulflo® Basket Strainers
For effective large particle removal

Fulflo® Filter Bags
High-quality, consistent filtration performance

Fulflo® HS Pleated Bag (HSPB)
High surface area for large volume industrial applications

Fulflo® Pleated Bag (PB)
High quality, consistent filtration performance

Fulflo® XLH Filter Bags
High-efficiency for quality filtration performance

Toll free sales & technical support:
940.325.2575
industrialprocess.na@parker.com

Fulflo® Basket Strainers

For effective large particle removal

Fulflo® basket strainers effectively remove large-sized particles ranging from US Mesh 20 to 100 (840µm to 149µm) from liquids with viscosities of up to 15,000 SSU. Parker basket strainers are useful as pre-filters for the collection of gross contaminants.

Contact Information

Parker Hannifin Corporation
Industrial Process Filtration - N.A.
118 Washington Avenue
Mineral Wells, TX 76067

phone +1 940 325 2575
industrialprocess.na@parker.com

www.parker.com/industrialprocess

Benefits

- Available in two standard sizes to fit Fulflo FB & SB bag filter vessels
- Each strainer constructed of 316 stainless steel and features a permanent handle for easy installation, removal and cleaning
- Fulflo strainer vessels designed for maximum operating pressures of up to 150psi (9.0bar) and high flow rates
- Cleanable permanent media
- Optional ratings available down to 550 mesh (25 micron)
- Five standard ratings available from 20 to 100 mesh
- ISO 9001 registered company

Applications

- Discharge Water
- Process Water
- Coolants
- Cutting Oils
- Inks
- Lubricants
- Paints
- Resins
- Solvents
- Bulk Chemicals
- Parts Washing Systems
- Adhesives

ENGINEERING YOUR SUCCESS.

Fulflo® Basket Strainers

SPECIFICATIONS

Maximum Operating Pressure Differential
150psid (10.3bar)

Length: (Basket Only)
Single = 14-¾ in. (37 cm)
Double = 27-¾ in. (70 cm)

Length: (Including Handle)
Single = 18-¾ in. (47 cm)
Double = 31-¾ in. (80 cm)

Outer Diameter:
Single = 7-7/16 in. (19 cm)
Double = 7-7/16 in. (19 cm)

Basket Capacity:
Single = 2.2gal (8.3 liters)
Double = 4.3gal (16.3 liters)

Weight:
Single = 5.4 lbs. (2 kg)
Double = 9.4 lbs. (4.3 kg)

Mesh Surface Area:
Single = 2.3 ft2 (2139 cm2)
Double = 4.2 ft2 (3906 cm2)

Pressure Drop Determination for Fulflo® Basket Strainers

1. From the pressure drop chart below, determine the pressure drop through the vessel using the known flow rate and inlet/outlet size. The chart is for water flowing through a vessel containing a clean 20 mesh basket.
2. To determine the pressure drop for a vessel with other strainers, multiply the above value by the appropriate correction factor in the following table (water only):
3. Correction factor for liquids other than water:
   a. Multiply pressure drop for water, determined by completing steps 1 and 2, by the specific gravity of the liquid.
   b. Multiply results of "a" by the viscosity and mesh correction factor in the table below.

Mesh Correction Factors

Viscosity SSU	20 Mesh	40 Mesh	60 Mesh	80 Mesh	100 Mesh
500	1.6	1.9	2.1	2.4	2.6
1,000	1.7	2.2	2.4	2.6	2.8
2,000	1.9	2.4	2.7	2.9	3.2
3,000	2.0	2.6	2.9	3.2	3.5
5,000	2.2	3.0	3.5	4.0	4.5
10,000	2.5	3.5	4.2	5.0	6.0

Water Correction Factor

20 Mesh	1.0
40 Mesh	1.2
60 Mesh	1.4
80 Mesh	1.6
100 Mesh	1.7

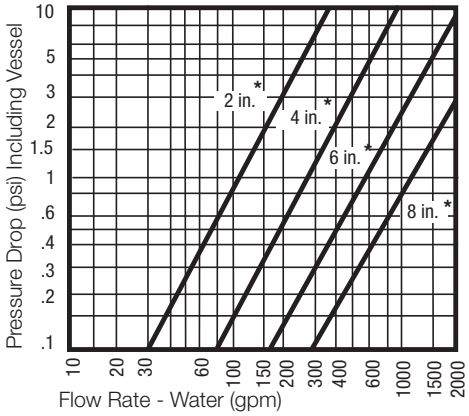

*Vessel Port Size

Ordering Information

Strainer Baskets With Handles

Single Length Stainless Steel (for CB, SB, & FB Vessels)	
Type	**Part #**
⅛ in. perforations	0370-5177
20 Mesh (840µm)	0370-5059
40 Mesh (420µm)	0370-5060
60 Mesh (250µm)	0370-5061
80 Mesh (177µm)	0370-5062
100 Mesh (149µm)	0370-5063

Double Length Stainless Steel (for CB, SB, & FB Vessels)	
Type	**Part #**
⅛ in. perforations	0370-5156
20 Mesh (840µm)	0370-5064
40 Mesh (420µm)	0370-5065
60 Mesh (250µm)	0370-5066
80 Mesh (177µm)	0370-5067
100 Mesh (149µm)	0370-5068

Specifications are subject to change without notification.
For User Responsibility Statement, see www.parker.com/safety

© 2017 Parker-Hannifin Corporation
Industrial Process Filtration - North America
All Rights Reserved

Fulflo is a registered trademark of Parker-Hannifin Corporation

Fulflo® Filter Bags

High-quality, consistent filtration performance

Fulflo® Filter Bags are ideal for virtually any process filtration application requiring the removal of solids. Parker's Fulflo® filter bags are manufactured and tested under the strictest quality control standards to assure consistent performance. Parker's Fulflo® filter bags perform at high flow rates and viscosities to 10,000 cps or higher.

Standard Fulflo® Filter Bags are available in 1µm to 800µm particle retention ratings.

Contact Information

Parker Hannifin Corporation
Industrial Process Filtration - N.A.
118 Washington Avenue
Mineral Wells, TX 76067

phone +1 940 325 2575
industrialprocess.na@parker.com

www.parker.com/industrialprocess

Features

- Standard filter bags fit Fulfo® vessels and most major competitive models
- The "C" Style Fulflo® bag features a polypropylene Quik-Seal ring which effectively seals the bag into standard Parker bag vessels
- The "G" Style Fulflo® bag features a carbon steel snap ring for positive sealing in competitive vessels
- Fulflo® Quik-Seal™ option is available for all "G" style Fulflo® filter bag media
- Felt bags come standard with glazed surface treatment to effectively control migration of fibers into the filtered product
- Polypropylene felt (P) bags are are FDA listed as acceptable for potable and edible liquid contact according to CFR Title 21

Applications

- Solvents
- Bulk Chemicals
- Coatings
- Coolants
- Petroleum Oils
- Inks
- Paints
- Adhesives
- Resins
- Prefilters for Finer Cartridges
- Parts Washing Systems
- Water

ENGINEERING YOUR SUCCESS.

Fulflo® Filter Bags

SPECIFICATIONS

Maximum Recommended Operating Conditions

Temperature:
Polyester: 275°F (136°C)
Polypropylene: 200°F (94°C)
Monofilament Nylon Mesh: 275°F (136°C)
Nomex®: 425°F (220°C)
Multifilament Polyester Mesh: 275°F (136°C)

Flow Rate: (Per single length)

Standard Bag: 80gpm (303 lpm)

Change-out ΔP: 35psi (2.4bar)

Pressure: 70psid (4.8bar)

Size
C1: 7.5″ X 17.5″
C2: 7.5″ X 31.5″
G1: 7″ X 17.5″
G2: 7″ X 31.5″

Effective Removal Ratings
0.5µm to 800µm

Bag Media Selection
Mono-filament Mesh:
Single strand nylon with retention ratings from 100µm to 600µm

Glazed Felt:
In polypropylene or polyester felts, the surface fibers are melt bonded to one another, reducing the possibility of fiber migration

Multi-filament Mesh:
Strong fabric woven from twisted strands. Particle retention ratings from 150µm to 800µm

High Temperature Nomex®

Standard Seal (no seal option specified)
C = Plastic Quik-Seal™ Ring (polypropylene for P felt and polyester for PE felt)

G = Galvanized Steel Ring

Standard Bag Flow Factors

Rating (µm)	Flow Factors
1	0.00083
3	0.00059
5	0.00044
10	0.00029
25	0.00017
50	0.00013
75	0.00008
100	0.00007

Flow Rate and Pressure Drop Formulas

$$\text{Flow Rate (gpm)} = \frac{\text{Clean } \Delta P \times \text{Length Factor}}{\text{Viscosity} \times \text{Flow Factor}}$$

$$\text{Clean } \Delta P = \frac{\text{Flow Rate} \times \text{Viscosity} \times \text{Flow Factor}}{\text{Length Factor}}$$

Notes:
1. Clean ΔP is psi differential at start.
2. Viscosity is centistokes. Use Conversion Tables for other units.
3. Flow Factor is ΔP/GPM at 1cks for single length bag.
4. Length Factors convert flow or ΔP from single length bags. Use length factor or 1 for single length and a factor of 2 for double length.

Ordering Information

Polypropylene, Polyester Felt Bags

C [ ] [ ] – [ ]

Bag Size
1
2

Polypropylene Media	Micron (µm)
P	1
	3
	5
	10
	25
	50
	100

Polyester Media	Micron (µm)
PE	1
	3
	5
	10
	25
	50
	75
	100
	200

Seal Options	
None	Polypropylene Quik Seal Ring
F	Flex Band Seal

G [ ] [ ] – [ ]

Bag Size
1
2

Polypropylene Media	Micron (µm)
P	1
	3
	5
	10
	25
	50
	100

Polyester Media	Micron (µm)
PE	1
	3
	5
	10
	25
	50
	75
	100
	200

Seal Options	
None	Carbon Steel Snap Ring
S	Stainless Steel O-ring
Q	Top Sealing Polypropylene Plastic Ring

Note:
The following apply to all bag media selections
- *Use C-Style bags for Parker CB, FB, & SB housings*
- *Use G-Style bags for Parker E-Series Bag & competitor housings*

Polyester Multi-Filament Bags

C [ ] PEMU [ ] – [ ]

Bag Size
1
2

Polyester Media
Micron (µm)
150
200
250
300
400
800

Seal Options	
None	Polypropylene Quik Seal Ring
F	Flex Band Seal
PE	Polyester Quik-Seal Ring

G [ ] PEMU [ ] [ ] – H

Bag Size
1
2

Polyester Media
Micron (µm)
150
200
250
300
400
800

Seal Options	
None	Carbon Steel Snap Ring
Q	Top Sealing Polypropylene Plastic Ring

Other Options	
H	Cotton Handle

Nomex Felt Bags

C [ ] NOM [ ] – F

Bag Size
1
2

Nomex Media
Micron (µm)
10
25
50
100

Seal Options	
F	Flex Band Seal (Required)

G [ ] NOM [ ] [ ] – H

Bag Size
1
2

Nomex Media
Micron (µm)
10
25
50
100

Seal	
None	Carbon Steel Snap Ring

Other Options	
H	Cotton Handle

Nylon Mono-Filament Bags

C [ ] MNO [ ] – [ ]

Bag Size
1
2

Nylon Media
Micron (µm)
100
200
300
400
600

Seal Options	
None	Polypropylene Quik Seal Ring
F	Flex Band Seal
PE	Polyester Quik-Seal Ring

G [ ] MNO [ ] [ ] – Q

Bag Size
1
2

Nylon Media
Micron (µm)
100
200
300
400
600

Seal	
None	Carbon Steel Snap Ring

Seal Options	
Q	Top Sealing Polypropylene Plastic Ring

Note:
The following apply to all bag media selections

- *Use C-Style bags for Parker CB, FB, & SB housings*
- *Use G-Style bags for Parker E-Series Bag & competitor housings*

Specifications are subject to change without notification.
For User Responsibility Statement, see www.parker.com/safety

© 2017 Parker-Hannifin Corporation
Industrial Process Filtration - North America
All Rights Reserved
Fulflo is a registered trademark of Parker-Hannifin Corporation

This page is intentionally blank.

Toll free sales & technical support:
940.325.2575

industrialprocess.na@parker.com

www.parker.com/industrialprocess

Fulflo® HS Pleated Bag Filter

Economical high surface area pleated bag for large volume industrial applications

The Fulflo® HS Pleated Bag filter is a nominally rated high surface area media configuration designed for high flow and high dirt loading industrial process conditions. The increased surface area reduces filtration costs by minimizing labor and downtime over use of standard bags. The Fulflo® HS Pleated Bag utilizes an o-ring seal to prevent fluid bypass and is fully thermally welded.

Contact Information

Parker Hannifin Corporation
Industrial Process Filtration - N.A.
118 Washington Avenue
Mineral Wells, TX 76067

phone +1 940 325 2575
industrialprocess.na@parker.com

www.parker.com/industrialprocess

Features

- Fits Parker domnick hunter EB bag housings and competitive standard size bag housings
- Enhanced capacity exceeds filter life when compared to standard filter bags
- Up to 12 times the surface area over standard filter bags
- Heavy duty construction
- ISO 9001 registered company

Benefits

- Fewer change-outs
- Longer filter life
- Lower filtration costs
- Fits competitor housings

Applications

- Oil & gas
  - Injection wells
  - Produced water
- Inks, paints, coatings & resins
- Automotive electrocoat applications
- Cooling towers
- Water remediation

ENGINEERING YOUR SUCCESS.

Fulflo® HS Pleated Filter Bags

SPECIFICATIONS

Materials of Construction

Filter Media Options

XF:	Polyester
F, M:	Polypropylene
MC, C, XC:	Polyamides

Outer Cage/Inner core
ETP (Electro-tin-plated) steel

End cap

P:	Polypropylene
E:	Polyester

Seal Materials
Buna-N, EPR, Viton®

Dimensions

Cartridge Outside Diameter
6 inches

Cartridge Inside Diameter
3-¼ inches

Cartridge Length
Bag 1 = 12 inches
Bag 2 = 26 inches

Maximum Flow Rate

Bag 1 = 100gpm
Bag 2 = 200gpm

Maximum Recommended Operating Conditions

Temperature

Polyester:	275 °F (136 °C)
Polypropylene:	200 °F (94 °C)
Polyamides:	275 °F (136 °C)

Change out ΔP
35psid

Note: A filter basket must be used with the HS Pleated Bag in housings

Performance Attributes

Flow Rate and Pressure Drop Formulas

$$\text{Flow Rate (gpm)} = \frac{\text{Clean } \Delta P \times \text{Length Factor}}{\text{Viscosity} \times \text{Flow Factor}}$$

$$\text{Clean } \Delta P = \frac{\text{Flow Rate} \times \text{Viscosity} \times \text{Flow Factor}}{\text{Length Factor}}$$

Notes:

1. Clean ΔP is psi differential at start.
2. Viscosity is centistokes. Use Conversion Tables for other units.
3. Flow factor is psid/gpm at 1cks for 10 in. (or single).
4. Length factors convert flow or ΔP from 10 in. (single length) to required cartridge length.

Potential Application By Media	Potential Application Use
HSPBXC Series	Disposal Wells
HSPBC Series	Fracking, Resins, Adhesives
HSPBMC Series	Produced Water, Ink, Coolants
HSPBM* Series	Parts Washing/Phosphate
HSPBF* Series	Electrocoat, Paint

** The F and M series is not recommended for fluids containing hydrocarbons*

HS Pleated Bag Flow Factors (psid/gpm@1cks)

Rating (series)	Flow factor
XF	0.00049
F	0.00023
M	0.00015
MC	0.0008
C	0.0005
XC	0.0002

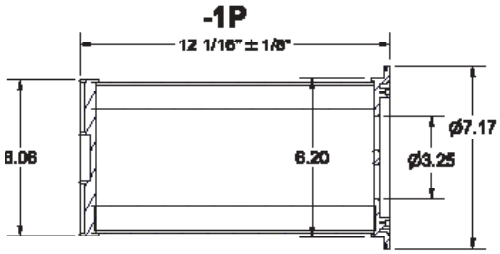

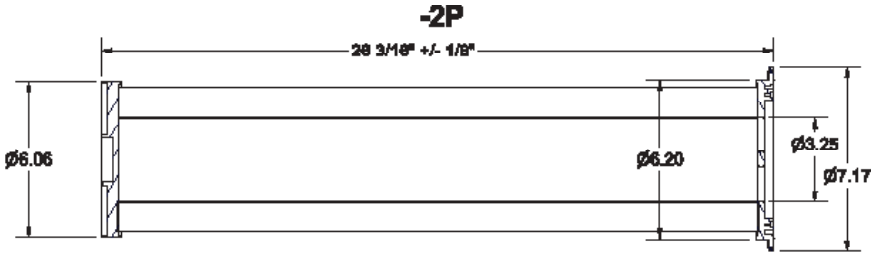

Ordering Information

HSPB [ ] — [ ][ ] — **US** [ ]

Cartridge Series
High Surface Pleated Bag

Media Options	
Code	Micron
XF	1-10
F	10-25
M	25-50
MC	50-100
C	100-200
XC	200-300

Bag Size	
Code	End cap Material
1	P (Polypropylene)
2	E (Polyester)

End Cap	
Code	Description
US	Under seal

Seal Material	
E	EPR
N	Buna-N
V	Viton®

Specifications are subject to change without notification.
For User Responsibility Statement, see www.parker.com/safety

© 2017 Parker-Hannifin Corporation
Industrial Process Filtration - North America
All Rights Reserved

Fulflo is a registered trademark of Parker-Hannifin Corporation
Viton is a registered trademark of E.I. DuPont de Nemours & Co., Inc.

Fulflo® Pleated Bag (PB)

High quality, consistent filtration performance

Parker's new Fulflo® Pleated Bag (PB) series is a high-capacity product line that provides a cost-effective alternative with higher removal efficiencies over standard bag media configurations. Utilizing Parker's unique "Select" pleat design along with our proprietary media configurations, we are able to optimize the pleat pack surface area to maximize the service life within each configuration. The Fulflo PBs are available in several polypropylene formats: Poly-Mate Plus, Poly-Mate and Claripor. In addition, it is available with our Glass-Mate media.

This product is designed to fit within existing bag filter vessels, including our SB, FB, CB series without any hardware changes and incorporates an easy- to-grasp integrated handle for quick removal.

Contact Information

Parker Hannifin Corporation
Industrial Process Filtration - N.A.
118 Washington Avenue
Mineral Wells, TX 76067

phone +1 940 325 2575
industrialprocess.na@parker.com

www.parker.com/industrialprocess

Features

- High capacity reduces the number of filters required resulting in fewer changouts & lower filtration costs
- High capacity allows for smaller housings & less capital expenditure
- Inside/outside flow captures and retains contaminates to eliminate potential fouling downstream
- Range of sealing configurations meets the majority of housing requirements
- Several media types are available for a wide variety of applications
- Manufactured with strict quality control
- All polypropylene constructed cartridges are FDA listed as acceptable for potable and edible liquid contact according to CFR Title 21
- ISO 9001 registered company

Applications

- Intermediates & fine chemicals
- Amines
- Commercial water
- Deep well injection
- Catalyst recovery
- Vegetable oils
- Paints & inks

ENGINEERING YOUR SUCCESS.

Fulflo® Pleated Bag (PB) Series

Materials of Construction:
Structural components:
  Polypropylene
Support/Drainage:
  Polypropylene
Media:
  Polypropylene
    Poly-Mate Plus
    Claripor
    Poly-Mate
  Borosilicate Microfiber
    Glass-Mate
Seal Material:
  EPDM
  Buna – N
  Viton®

FDA-listed as acceptable for potable/ edible liquid contact according to CFR Title 21

- Claripor CPPB
- Glass-Mate GMPB
- Poly-Mate PMPB
- Poly-Mate Plus PPPB

Recommended Operating Conditions:
Poly-Mate Plus, Poly-Mate, Claripor:
70 psid (4.8 bard) @ 77 F (25 C)
35 psid (2.4 bard) @ 130 F (54 C)

Flow Rate	P1	P2
Recommended Flow Rate*	25gpm (95 L/min)	50gpm (189L/min)
Maximum Flow Rate	50gpm (189L/min)	100gpm (379L/min)
* For optimum performance		
Recommended change-out differential pressure 35psid (2.41 bard)		

Glass-Mate:
40 psid (2.8 bard) @ 77 F (25 C)
15 psid (1.0 bard) @ 175 F (79 C)

Dimensions (Nominal):
Outside Flange Diameter: 7.25″
Outside Filter Diameter: 6″

Length (Nominal):
Size 1 Bag - 11.5″
Size 2 Bag - 24.5″

Size (Nominal):
C: 7.50″
G: 7.12″

PLEATED BAG CONFIGURATION OPTIONS

Claripor CPPB
The PB Claripor offers the best of pleated and depth style technologies. The unique depth layer construction provides higher retention, longer service life, and excellent gel removal. These features, in addition to the PB Claripor's high contaminant holding capacity and exceptional clarifying ability make it an ideal choice for a wide array of critical process applications.

Poly-Mate PMPB
The PB Poly-Mate incorporates a unique combination of polypropylene meltblown and spun-bonded media to provide a high surface area, finish-free and non-fiber releasing filtration.

Poly-Mate Plus PPPB
The PB Poly-Mate Plus filters are made with pleated a polypropylene microfiber which provides high efficiency and high purity filtration. The PB Poly-Mate Plus media configuration makes it an ideal membrane pre-filter or cost effective alternative to membrance filters in a variety of applications.

Glass-Mate GMPB
The PB Glass-Mate offers an economical choice for applications requiring high quality filtration, and long service life. The laminated media/support layer maximizes flow capacity and eliminates media migration.

PB Flow Factors (based on 25 gpm for Size 1 Bags) & Efficiencies

Poly-Mate (PMPB)				Poly-Mate Plus (PPPB)				Claripor (CPPB)				Glass-Mate (GMPB)			
PN/ Micron	Effic. @95%	Effic. @99%	Flow Factor PSI/GPM	PN/ Micron	Effic. @90%	Effic.@ ≥99.9%	Flow Factor PSI/GPM	PN/ Micron	Effic. @90%	Effic.@ ≥99.9%	Flow Factor PSI/GPM	PN/ Micron	Effic. @90%	Effic.@ ≥99.9%	Flow Factor PSI/GPM
1	0.2	1	0.0186	1	0.45	1.4	0.0290	1.5	0.7	1.5	0.0616	1.5	1	1.5	0.0261
2.5	1	2.5	0.0102	3	1	2.5	0.0068	3	1	3	0.0359	3	1.6	3	0.0248
5	3	5	0.0024	5	2	5	0.0060	4.5	3.5	4.5	0.0257	10	5	10	0.0165
15	8	15	0.0017	10	4	10	0.0048	10	4	10	0.0205	20	12	20	0.0116
48	32	48	0.0011	20	12	20	0.0010	20	12	20	0.0128	40	20	40	0.0050
				40	20	40	0.0007	30	16	30	0.0077				
				70	35	70	0.0005	40	18	40	0.0067				
				90	60	90	0.0004	70	25	70	0.0062				
								90	40	90	0.0039				

Specifications are subject to change without notification.
For User Responsibility Statement, see www.parker.com/safety

Parker

Fulflo® Pleated Bag (PB) Series

Ordering Information

PMPB ☐ – ☐ ☐ – ☐ ☐

Poly-Mate

Micron Rating	
Code	µm
010	1
025	2.5
050	5
150	15
480	48

Bag Length
1
2

Hardware	
Code	Description
P	Polypropylene

Ring Style	
Code	Description
CQ	Plastic: "Q" Parker Top Sealing
CA	Elastomeric: Parker
GQ	Plastic: "Q" Competitive Top Sealing
GB	Elastomeric: GAF/FSI Side Entry Seal
GC	Elastomeric: Pall/FTC
GD	Elastomeric: FSI/Hayward Over the Top Seal

Seal Type (A, B, C, D only)	
Code	Description
N	Buna-N
E	EPR
V	Viton®

PPPB ☐ – ☐ ☐ – ☐ ☐

Poly-Mate Plus

Micron Rating	
Code	µm
010	1
030	3
050	5
100	10
200	20
400	40
700	70
900	90

Bag Length
1
2

Hardware	
Code	Description
P	Polypropylene

Ring Style	
Code	Description
CQ	Plastic: "Q" Parker Top Sealing
CA	Elastomeric: Parker
GQ	Plastic: "Q" Competitive Top Sealing
GB	Elastomeric: GAF/FSI Side Entry Seal
GC	Elastomeric: Pall/FTC
GD	Elastomeric: FSI/Hayward Over the Top Seal

Seal Type (A, B, C, D only)	
Code	Description
N	Buna-N
E	EPR
V	Viton®

CPPB ☐ – ☐ ☐ – ☐ ☐

Claripor

Micron Rating	
Code	µm
015	1.5
030	3
045	4.5
100	10
200	20
300	30
400	40
700	70
900	90

Bag Length
1
2

Hardware	
Code	Description
P	Polypropylene

Ring Style	
Code	Description
CQ	Plastic: "Q" Parker Top Sealing
CA	Elastomeric: Parker
GQ	Plastic: "Q" Competitive Top Sealing
GB	Elastomeric: GAF/FSI Side Entry Seal
GC	Elastomeric: Pall/FTC
GD	Elastomeric: FSI/Hayward Over the Top Seal

Seal Type (A, B, C, D only)	
Code	Description
N	Buna-N
E	EPR
V	Viton®

GMPB ☐ – ☐ ☐ – ☐ ☐

Glass-Mate

Micron Rating	
Code	µm
015	1.5
030	3
100	10
200	20
400	40

Bag Length
1
2

Hardware	
Code	Description
P	Polypropylene

Ring Style	
Code	Description
CQ	Plastic: "Q" Parker Top Sealing
CA	Elastomeric: Parker
GQ	Plastic: "Q" Competitive Top Sealing
GB	Elastomeric: GAF/FSI Side Entry Seal
GC	Elastomeric: Pall/FTC
GD	Elastomeric: FSI/Hayward Over the Top Seal

Seal Type (A, B, C, D only)	
Code	Description
N	Buna-N
E	EPR
V	Viton®

Specifications are subject to change without notification.
For User Responsibility Statement, see www.parker.com/safety

© 2017 Parker-Hannifin Corporation
Industrial Process Filtration - North America
All Rights Reserved
Fulflo is a registered trademark of Parker-Hannifin Corporation

This page is intentionally blank.

Toll free sales & technical support:
940.325.2575

industrialprocess.na@parker.com

www.parker.com/industrialprocess

Fulflo® XLH Filter Bags

High-efficiency for quality filtration performance

Fulflo® XLH filter bags are ideal for virtually any process filtration application requiring the removal of solids. Parker's filter bags are manufactured and tested under the strictest quality control standards to assure consistent performance.

XLH filter bags perform at efficiencies similar to depth cartridges with high flow rates and viscosities to 10,000 cps or higher. XLH bags are available in 0.5µm, 1µm, 2.5µm,10µm and 25µm particle retention ratings.

Contact Information

Parker Hannifin Corporation
Industrial Process Filtration - N.A.
118 Washington Avenue
Mineral Wells, TX 76067

phone +1 940 325 2575
industrialprocess.na@parker.com

www.parker.com/industrialprocess

Benefits

- Parker's XLH all-polypropylene high efficiency filter bags provide twice the dirt-holding capacity at a lower cost than many competitive bags and cartridges of the same micrometer rating
- XLH bags require less frequent change out, less storage and disposal space, and are easy to install and remove
- Each bag is incinerable (with Quik-Seal™ option), reducing filter disposal costs
- All materials of construction are FDA listed as acceptable for potable and edible liquid contact according to CFR Title 21
- ISO 9001 registered company

Applications

- Solvents
- Bulk Chemicals
- Coatings
- Coolants
- Petroleum Oils
- Inks
- Paints
- Adhesives
- Resins
- Prefilters for Finer Cartridges
- Parts Washing Systems
- Water

ENGINEERING YOUR SUCCESS.

Fulflo® XLH Filter Bags

SPECIFICATIONS

Materials of Construction

Microfiber: FDA grade polypropylene microfiber used in the XLH bag series assures high-efficiency performance and is oil absorbent.

Particle retention ratings:
0.5µm to 25µm

Maximum Recommended Operating Conditions

Temperature:
Polypropylene–200°F (94°C)
Flow Rate (Per single length)
XLH 25gpm (95 lpm)
Change-out ΔP: 35psi (2.4bar)

Maximum Allowable Pressure:
70psid (4.8bar)
Standard Seal:
(No seal option specified)
C = Plastic Quik-Seal Ring
G = Galvanized Steel Ring

Size

C1: 7.5″ X 17.5″
C2: 7.5″ X 31.5″
G1: 7″ X 17.5″
G2: 7″ X 31.5″

XLH Flow Factors

Rating (µm)	Flow Factors
0.5	0.0185
1	0.0143
2.5	0.0130
10	0.0043
25	0.0031

XLH Filter Bag Retention Ratings

Rating (µm)	Particle Size (µm) at which efficiency is:		
	90%	95%	99%
0.5	0.5	1	5
1	1	2	10
2.5	2.5	4	16
10	2.5	4	16
25	25	30	40

Flow Rate and Pressure Drop Formulas

$$\text{Flow Rate (gpm)} = \frac{\text{Clean } \Delta P \times \text{Length Factor}}{\text{Viscosity} \times \text{Flow Factor}}$$

$$\text{Clean } \Delta P = \frac{\text{Flow Rate} \times \text{Viscosity} \times \text{Flow Factor}}{\text{Length Factor}}$$

Notes:
1. Clean ΔP is psi differential at start.
2. Viscosity is centistokes. Use Conversion Tables for other units.
3. Flow Factor is ΔP/GPM at 1cks for single length bag.
4. Length Factors convert flow or ΔP from single length bags. Use length factor or 1 for single length and a factor of 2 for double length.

Beta Ratio (ß):

$$\frac{\text{Upstream Particle Count @ Specified Particle Size \& Larger}}{\text{Downstream Particle Count @ Specified Particle Size \& Larger}}$$

$$\text{Percent Removal Efficiency} = \left(\frac{ß-1}{ß}\right) \times 100$$

Ordering Information

C [ ] XLH [ ] – [ ]

Bag SIZE
1
2

Micron Rating
.5µm
1µm
2.5µm
10µm
25µm

Seal Options	
None	Quik Seal
F	Flex Band Seal

G [ ] XLH [ ] – [ ] [ ]

Bag SIZE
1
2

Micron Rating
.5µm
1µm
2.5µm
10µm
25µm

Seal Options	
Q	Top Sealing Plastic Ring

Other Options	
None	Quik Seal
H	Cotton Handle

Specifications are subject to change without notification.
For User Responsibility Statement, see www.parker.com/safety

© 2017 Parker-Hannifin Corporation
Industrial Process Filtration - North America
All Rights Reserved

Fulflo is a registered trademark of Parker-Hannifin Corporation

Sorbent Media Series

Fulflo® TruBind™ 300
Filter Cartridge
Effective & economical hydrocarbon removal with enhanced polymeric absorbent cartridges

Fulflo® TruBind™ 400
Filter Cartridge
Effective & economical hydrocarbon removal with enhanced polymeric absorbent cartridges

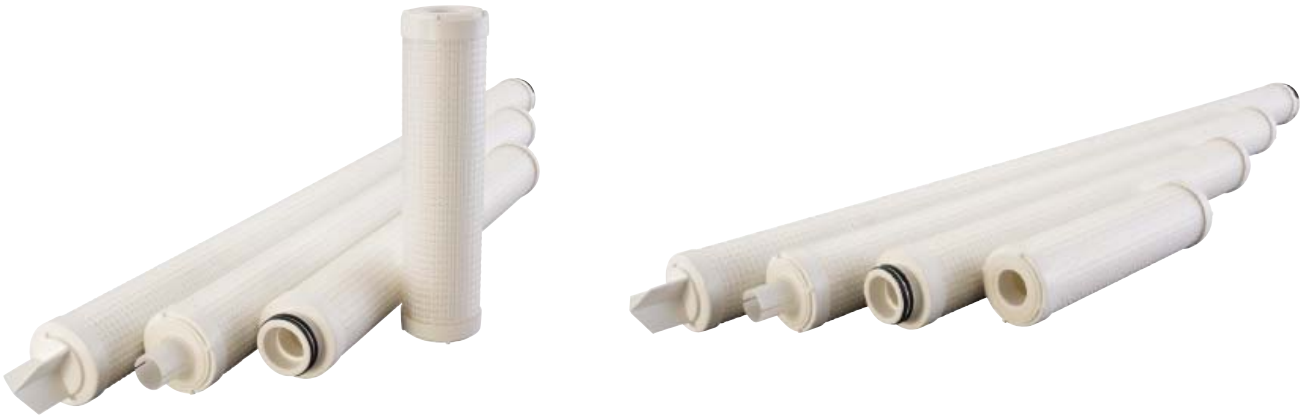

Toll free sales & technical support:
940.325.2575
industrialprocess.na@parker.com

Fulflo® TruBind™ 300 Filter Cartridge

Effective & economical hydrocarbon removal with enhanced polymeric absorbent cartridges

Parker Fulflo® TruBind™ absorbent cartridges utilize a modified polymeric absorbent that economically and effectively reduces trace hydrocarbon contamination in aqueous fluids. The enhanced polymer, configured in a radial-flow-design cartridge, provides maximum utilization of available surface area. This product can be used alone or as an enhancement to other systems. Whether process fluid reclamation or meeting disposal requirements is the goal, TruBind can solve many demanding hydrocarbon-contaminated aqueous fluid problems.

Contact Information

Parker Hannifin Corporation
Industrial Process Filtration - N.A.
118 Washington Avenue
Mineral Wells, TX 76067

phone +1 940 325 2575
industrialprocess.na@parker.com

www.parker.com/industrialprocess

Benefits

- Increases machine tool life when installed at point-of-use
- Increases working life of valuable process fluids
- Reduces hydrocarbon levels to meet EPA discharge regulations
- Absorbed hydrocarbon is chemically bound by polymer and is not leachable
- Absorbent polymer is enhanced to maximize utilization of surface area
- Radial flow design of cartridge allows maximum flow with minimal pressure drop
- High integrity construction withstands harsh process environment
- Variety of cartridge sizes & end cap options increase housing selection
- TruBind cartridges are completely incinerable
- ISO 9001 registered company

Applications

- Water Soluble Machine
- Alkaline Parts Washing
- Industrial Discharge Water
- Produced Water Disposal
- E-Coat Paint
- Post Oil/Water Separator
- Compressor Condensate
- Car & Truck Wash Water
- Plating Bath
- Gas & Oil Facility Wastewater
- Surface Water Runoff (Truck stops, airports, auto service stations)
- Bilge Water
- Pre Carbon Bed
- Aerosol Mists Cooling Water
- Tanker Ballast Water
- Pre R.O. Membrane Polishing

ENGINEERING YOUR SUCCESS.

Fulflo® TruBind™ 300 Filter Cartridge

SPECIFICATIONS

Materials of Construction
Absorbent: Proprietary modified polymer
Support Construction: 100% polyolefin
Seal Material: Gasket (Polyethylene Foam); 222 O-Ring (Buna-N)

Maximum Recommended Operating Conditions
Temperature:
150°F (65°C) @ 20psid (1.4bar); 180°F (82°C) @10psid (0.7bar)
Pressure:
40psid (2.8bar) @ 75°F (24°C)
Flow Rate:
1.0gpm per 10-inch cartridge
Change-out Pressure Drop (net):
10psi (0.7bar)
Flow Factor:
0.03psid per 1gpm at 1cks viscosity per 10 in cartridge
pH Range: 2 - 12
Lengths: 10-40 in (249mm-1016mm)

Dimensions:
Outside Diameter: 2½″ in (63.5 mm)
Inside Diameter: 1 1/16″ in (27 mm)

Bio-safety:
The TruBind cartridge is classified as non-hazardous and incinerable. Disposal must be dictated by local regulations pertaining to the absorbed contaminant.

Recommended Vessels:
All standard Fulflo vessels designed for 2-1/2 in OD cartridges.

Technology
Unlike competitive technologies in which hydrocarbons are removed through surface adsorption onto the medium, TruBind cartridges utilize a proprietary modified polymer that both absorbs and chemically binds the hydrocarbon molecules into its interior matrices. The affinity of the polymeric absorbent for hydrocarbon contaminant is so great that accelerated testing by the Toxic Characteristics Leachate Procedure (TCLP) indicated the effluent hydrocarbon level in water to be below current and proposed EPA limits. The modified polymer was formulated to control the speed of hydrocarbon absorption by eliminating the potential for skin formation at the polymer/hydrocarbon interface. Consequently this polymer, when incorporated into a radial-flow-design cartridge, insures maximum utilization of surface area. The nature of the polymer makes it an effective absorbent for free, emulsified and dissolved oils, synthetic lubricants, grease and a multitude of organic solvents.

Performance
TruBind absorbent cartridge efficiency depends upon the residence time of the fluid within the cartridge, which is a function of the volumetric flow rate.

1. Hydrocarbon Removal Efficiency: At an equivalent flow rate of 1.0gpm per 10-inch cartridge the TruBind cartridge typically reduces trace hydrocarbon contaminant in excess of 95% in single pass mode. This efficiency level can be maintained only to a net differential pressure of 10psi. Series or multipass filtration can virtually eliminate hydrocarbon contamination.
2. Hydrocarbon Absorbent Capacity: The TruBind cartridge medium has the potential to remove up to 250 grams (approximately one-half pint) of low density hydrocarbon contaminant. On this basis, the table below provides expected life data in hours orgallons at several trace contaminant levels based on a 1.0gpm flow rate per 10-inch cartridge. Absorbent capacity will decrease as density of hydrocarbon increases.
3. Flow Rate Capability: A maximum flow rate of 1.0gpm per 10-inch length cartridge is recommended for the most effective removal of trace hydrocarbon contaminant.

Hydrocarbon (ppm)	Concentration % by weight	Hydrocarbon removal per minute (grams)	Estimated life in hours	Gallons fluid treated	Estimated cost per gallon of treated fluid
10	.001	0.04	106.0	6,330	$.003
100	.01	.40	10.6	633	$.03
1,000	.1	4.00	1.1	63	$.30

Note: Cost per gallon decreases significantly with longer cartridges.

Use the following equations to calculate performance:
Life (Hrs.) = 1100.8/PPM
Removal Rate (Grams/Min) = PPM/264.2

Ordering Information

TBC [ ] [ ] – [ ] – [ ]

Cartridge Series
TruBind Absorbent Cartridge

Length		
Code	Inches	mm
9	9 5/8	244
10	9 13/16	249
19	19 5/8	498
20	19 15/16	506
29	29 1/4	743
30	30 1/16	764
39	39	991
40	40	1016

Support Core	
Code	End cap Material
A	Standard Wall Polypropylene Core

End Cap Configuration	
Code	Description
DO	Double open end (gasket seal)
DX	DOE with core extender
TC	Single open end (222 O-ring seal)
TX	222 O-ring/Flex fin

Seal Material	
Code	Description
A	Polyolefin foam gasket (Std. for DO seal design)
E	EPDM
N	Buna-N O-ring (Std. for TC seal design)
S	Silicone

Specifications are subject to change without notification.
For User Responsibility Statement, see www.parker.com/safety

© 2017 Parker-Hannifin Corporation
Industrial Process Filtration - North America
All Rights Reserved

Fulflo is a registered trademark of Parker-Hannifin Corporation

DS_IP_TruBind 300 Rev. B

Fulflo® TruBind™ 400 Filter Cartridge

Effective & economical hydrocarbon removal with enhanced polymeric absorbent cartridges

Parker Fulflo® TruBind™ absorbent cartridges utilize a modified polymeric absorbent that economically and effectively reduces trace hydrocarbon contamination in aqueous fluids. The enhanced polymer, configured in a radial-flow-design cartridge, provides maximum utilization of available surface area. This product can be used alone or as an enhancement to other systems. Whether process fluid reclamation or meeting disposal requirements is the goal, TruBind™ can solve many demanding hydrocarbon-contaminated aqueous fluid problems.

Contact Information

Parker Hannifin Corporation
Industrial Process Filtration - N.A.
118 Washington Avenue
Mineral Wells, TX 76067

phone +1 940 325 2575
industrialprocess.na@parker.com

www.parker.com/industrialprocess

Benefits

- Increases machine tool life when installed at point-of-use
- Increases working life of valuable process fluids
- Reduces hydrocarbon levels to meet EPA discharge regulations
- Absorbed hydrocarbon is chemically bound by polymer and is not leachable
- Absorbent polymer is enhanced to maximize utilization of surface area
- Radial flow design of cartridge allows maximum flow with minimal pressure drop
- High integrity construction withstands harsh process environment
- TruBind cartridges are completely incinerable
- ISO 9001 registered company

Applications

- Water Soluble Machine Tool Coolants
- Alkaline Parts Washing
- Industrial Discharge
- Car & Truck Wash Water
- Gas & Oil Facility Wastewater
- Tanker Ballast Water
- Bilge Water
- Surface Water Runoff
- Produced Water Disposal (Truck stops, airports, auto service stations)
- Pre Carbon Bed
- Post Oil/Water Separator
- E-Coat Paint
- Compressor Condensate
- Pre R.O. Membrane Water
- Plating Bath
- Aerosol Mists

ENGINEERING YOUR SUCCESS.

Fulflo® TruBind™ 400 Filter Cartridge

SPECIFICATIONS

Materials of Construction:

Absorbent: Proprietary polymer
Support Construction: 100% polyolefin
Seal Material: Polyethylene Foam

Cartridge Dimensions (nominal)

Lengths:
9 13/16 in (249mm)
19 15/16 in (506mm)
Outside Diameter:
4 ½ in (114 mm)
Inside Diameter:
1 1/16 in (27 mm)

Maximum Recommended Operating Conditions:

Temperature:
150°F (65°C) @20psid (1.4bar);
180°F (82°C) @10psid (0.7bar)
Pressure:
40psid (2.8bar) @ 75°F (24°C)
Flow Rate:
3.0gpm per 10-inch cartridge
Change-out Pressure Drop (net):
10psi (0.7bar)
Flow Factor:
0.1psid per 1gpm at 1cks viscosity per 10 in cartridge
pH Range: 2 - 12

Bio-safety:

The TruBind cartridge is classified as non-hazardous and incinerable. Disposal must be dictated by local regulations pertaining to the absorbed contaminant.

Recommended Vessels:

Parker LTG10 and LTG20 polymeric vessels and equivalent competitive vessels.

Technology

Unlike competitive technologies in which hydrocarbons are removed through surface adsorption onto the medium, TruBind cartridges utilize a proprietary modified polymer that both absorbs and chemically binds the hydrocarbon molecules into its interior matrices. The affinity of the polymeric absorbent for hydrocarbon contaminant is so great that accelerated testing by the Toxic Characteristics Leachate Procedure (TCLP) indicated the effluent hydrocarbon level in water to be below current and proposed EPA limits. The modified polymer was formulated to control the speed of hydrocarbon absorption by eliminating the potential for skin formation at the polymer/hydrocarbon interface. Consequently this polymer, when incorporated into a radial-flow-design cartridge, insures maximum utilization of surface area. The nature of the polymer makes it an effective absorbent for free, emulsified and dissolved oils, synthetic lubricants, grease and a multitude of organic solvents.

Performance

TruBind absorbent cartridge efficiency depends upon the residence time of the fluid within the cartridge, which is a function of the volumetric flow rate.

1. Hydrocarbon Removal Efficiency: At an equivalent flow rate of 3.0gpm per 10-inch cartridge the TruBind cartridge typically reduces trace hydrocarbon contaminant in excess of 95% in single pass mode. This efficiency level can be maintained only to a net differential pressure of 10psi. Series or multipass filtration can virtually eliminate hydrocarbon contamination.
2. Hydrocarbon Absorbent Capacity: The TruBind cartridge medium has the potential to remove up to 500 grams (approximately one pint) of low density hydrocarbon contaminant. On this basis, the table below provides expected life data in hours orgallons at several trace contaminant levels based on a 3.0gpm flow rate per 10-inch cartridge. Absorbent capacity will decrease as density of hydrocarbon increases.
3. Flow Rate Capability: A maximum flow rate of 3.0gpm per 10-inch length cartridge is recommended for the most effective removal of trace hydrocarbon contaminant.

Use the following equations to calculate performance:
Life (Hrs.) = 800/PPM
Removal Rate (Grams/Min) = PPM/90

Hydrocarbon (ppm)	Concentration % by weight	Hydrocarbon removal per minute (grams)	Estimated life in hours	Gallons fluid treated	Estimated cost per gallon of treated fluid
10	.001	0.11	80.0	14, 400	$.002
100	.01	1.10	8.0	1,400	$.025
1,000	.1	11.00	0.8	144	$.24

Note: Cost per gallon decreases significantly with longer cartridges.

Ordering Information

TBC [ ] [ ] [ ] — [ ] — [ ]

Cartridge Series
TruBind Absorbent Cartridge

Outside Diameter		
Code	Inches	mm
4	4 ½	114

Cartridge Length		
Code	Inches	mm
10	9 13/16	249
20	19 15/16	506

Support Core	
Code	End cap Material
A	Standard Wall Polypropylene Core

End Cap Configuration	
Code	Description
DO	Double open end (gasket seal)

Seal Material	
Code	Description
A	Polyolefin foam gasket (Std. for DO seal design)

Specifications are subject to change without notification.
For User Responsibility Statement, see www.parker.com/safety

© 2017 Parker-Hannifin Corporation
Industrial Process Filtration - North America
All Rights Reserved

Fulflo is a registered trademark of Parker-Hannifin Corporation

Metallic Media Series

Fulflo® Metallic
Filter Cartridges
High-integrity cartridges for optimized filtration

Steelflow™ Filter Cartridges
All-316L stainless steel filter cartridge for microfiltration applications

Parker

www.parker.com/industrialprocess

Toll free sales & technical support:
940.325.2575
industrialprocess.na@parker.com

Fulflo® Metallic Filter Cartridges

High-integrity cartridges for optimized filtration

Fulflo® metallic stainless steel filter cartridges provide optimum filtration for fluids and gases in high temperature and high flow rate applications.

Available in a cylindrical or pleated design, cleanable stainless steel cartridges are the logical choice when natural and synthetic media cartridges cannot meet aggressive process conditions.

Fulflo® reusable 304 and 316 grade stainless steel cartridges offer versatility of choice with fourteen nominal particle removal ratings, six standard lengths and a variety of end configurations and seal materials.

Contact Information

Parker Hannifin Corporation
Industrial Process Filtration - N.A.
118 Washington Avenue
Mineral Wells, TX 76067

phone +1 940 325 2575
industrialprocess.na@parker.com

www.parker.com/industrialprocess

Benefits

- Temperature capability up to 500° F with synthetic seals; up to 1500°F with NPT connections
- Available in 304 and 316 stainless steel for aggressive chemical compatibility
- Available in fourteen nominal ratings from 2 to 840 microns for a wide range of particle size removal
- Dimensional integrity of stainless steel media accommodates high flow rate/high temperature systems
- Cartridges can be cleaned & reused
- Available with a wide range of grommet and O-ring materials to optimize fluid and temperature compatibility
- Variety of seal configurations allow retrofit in many filter vessel designs
- Pleated surface maximizes filtration area for longer service life
- Plain (cylindrical) surface provides ease of cleaning
- Welded and crimped construction eliminates the need for adhesives which can be a contaminant source and limit temperature range
- Optional perforated stainless steel pleat protectors minimize handling damage
- Meets FDA guidelines for use with potable and edible liquids

Applications

- Heat Transfer
- Hot Melt Processes
- Viscous Fluids
- Hot Wax
- Aggressive Gases
- Polymer Filtration
- High Temperature Processes
- Process Fluids Steam
- Corrosive Fluids
- Catalyst Recovery
- Caustic Cleaning Solutions

ENGINEERING YOUR SUCCESS.

Fulflo® Metallic Filter Cartridges

SPECIFICATIONS

Materials of Construction:

- Filter Medium: Stainless steel wire cloth
- Structural Components: 100% stainless steel
- Seal Materials:
  - Grommets: Buna-N, Viton®, PTFE, EPDM
  - O-Rings - Buna-N, EPDM, Viton®, PFA encapsulated Viton®
- Construction Method: Welded and crimped (no adhesives)
- Meets FDA guidelines with optional seal materials (″F″ Code)

Maximum Recommended Operating Conditions:

- Temperature:
  - 1500ºF (816°C) - NPTF & NPTM styles only
  - 500ºF (260°C) - Any cartridge style with PTFE grommet
  - 400ºF (204°C) - Any cartridge style with Viton® or PFA encapsulated Viton® seal material
  - 300ºF (149°C) - Any cartridge style with EPDM seal material
  - 250ºF (121°C) - Any cartridge style with Buna-N seal material
- Differential Pressure:
  - Standard core: 60psi (4.1bar)
  - High pressure core: 300psi (20.7bar)
- Flow Rate: 10gpm (38 lpm) per 10 in. cartridge
- Change-out ΔP: 35psi (2.4bar)

Particle Removal Ratings (Nominal):

14 ratings from 2 to 840 micrometers

Effective Filtration Area:

Cylindrical

0.5 ft^2/10 in. length (465 cm^2/254mm)

Pleated

1.7 ft^2/10 in. length (1580 cm^2/254 mm)

Dimensions

- Outside Diameter:
  - Cylindrical: 2-½ in (64 mm)
  - Pleated: 2-⅝ in (67 mm)
- Inside Diameter: 1-1/16 in (27 mm)
- Lengths (nominal): 10, 20 and 30 in
- Grommet: 1-1/16 in. (27 mm) ID X 1-⅞ in. (48 mm) OD

Flow Rate and Pressure Drop Formulas

$$\text{Flow Rate (gpm)} = \frac{\text{Clean DP x Length Factor}}{\text{Viscosity x Flow Factor}}$$

$$\text{Clean DP} = \frac{\text{Flow Rate x Viscosity x Flow Factor}}{\text{Length Factor}}$$

Notes:

1. Clean DP is psi differential at start.
2. Viscosity is centistokes. Use Conversion Tables for other units.
3. Flow Factor is DP/GPM at 1cks for 10 in (or single).
4. Length Factors convert flow or DP from 10 in (single length) to required cartridge length.

Removal Rating/Mesh Count/Open Area

Micrometer Rating Nominal | (Absolute)		Mesh Count (per inch)	Percent Open Area
2	9	325 x 2300	N/A
5	14	200 x 1400	N/A
10	18	165 x 1400	N/A
20	32	200 x 600	N/A
40	55	120 x 400	N/A
75	-	190 x 200	35
100	-	30 x 150	31
150	-	90 x 100	33
190	-	70 x 80	35
230	-	50 x 60	41
280	-	40 x 50	35
370	-	40 x 40	36
540	-	30 x 30	45
840	-	20 x 20	52

Ratings from 2 - 40 micrometers are twill dutch weave pattern
Ratings from 75 - 840 micrometers are open square weave pattern

Length Factor Table

Length	Length Factor
9-¾″, 10	1
19-½″, 20	2
29-¼″, 30	3
39, 40	4

Flow Factor Table

Rating	CSS Flow Factor	PSS Flow Factor	Rating	CSS Flow Factor	PSS Flow Factor
2	0.011111	0.003268	150	0.001462	0.000430
5	0.008681	0.002553	190	0.001389	0.000408
10	0.005787	0.001702	230	0.001323	0.000389
20	0.003966	0.001167	280	0.001157	0.000340
40	0.002222	0.000654	370	0.000992	0.000292
75	0.001736	0.000511	540	0.000896	0.000264
100	0.001634	0.000481	840	0.000694	0.000204

Ordering Information

Cartridge Code

CODE	DESCRIPTION
CSS	Cylindrical Stainless Steel
PSS	Pleated Stainless Steel

Nominal Micrometer Rating (µm)

2
5
10
20
40
75
100
150
190
230
280
370
540
840

Nominal Length

CODE	INCH	mm
4	4	102
9	9.75	248
10	10	254
19	19.5	495
20	20	508
29	29.25	743
30	30	762
40	40	1016

Media | Support Construction

CODE	DESCRIPTION
G	304 Stainless Steel
S	316 Stainless Steel

Seal Material

CODE	MATERIAL
E	EPDM
F	PTFE (Grommet only)
N	Buna-N
T	PFA | Viton® (O-ring only)
V	Viton®
X	No seal material (FC, MC style)

End Cap Configuration

CODE	MATERIAL
DO	Double open end (DOE)
DX	Double open end w/extended core
FC	Single open end w/1″ NPTF female connection
MC	Single open end w/ 1″ NPTM male
SC	226 O-ring | Flat
TC	222 O-ring | Flat

Special Options

CODE	DESCRIPTION
H	High pressure core (316 SS)
P	Pleat protector sleeve (316 SS)

Specifications are subject to change without notification.
For User Responsibility Statement, see www.parker.com/safety

© 2017 Parker-Hannifin Corporation
Industrial Process Filtration - North America
All Rights Reserved

Fulflo is a registered trademark of Parker-Hannifin Corporation
Viton is a registered trademark of E.I. DuPont de Nemours & Co., Inc.

Steelflow™ Filter Cartridges

All-316L stainless steel filter cartridge for microfiltration applications

The Steelflow™ filter cartridge was developed for microfiltration applications with extreme thermal ranges and differential pressures and provides extended service life with excellent dirt-holding capacity.

Steelflow's superior performance is due to its proprietary 421® filter medium, composed of 100%, 316L random fiber stainless steel. A unique calendering process forms specialized filter media which provides consistently high porosities and large filtration areas. The sintered matrix is reinforced with woven wire screen to provide the mechanical strength necessary to withstand high differential pressures and exceptional flow characteristics. All other Steelflow components are 316L stainless steel which provides exceptional chemical and thermal resistance. Steelflow can be cleaned mechanically, chemically or thermally to allow cartridge reuse and are bubble point integrity tested for quality. Available in 0.5µm, 1.0µm, 5.0µm, 10µm, 20µm and 40µm. Liquid particle retention is typically 99.0% efficient at the stipulated pore size.

Contact Information

Parker Hannifin Corporation
Industrial Process Filtration - N.A.
118 Washington Avenue
Mineral Wells, TX 76067

phone +1 940 325 2575
industrialprocess.na@parker.com

www.parker.com/industrialprocess

Benefits

- 100% bubble point integrity tested
- 316L stainless steel construction
- Superior chemical compatibility
- Excellent mechanical strength
- Extended on-stream life
- High thermal tolerance
- Regenerable

Applications

- Spargers
- Cryogenics
- Beverage Filtration
- Highly Viscous Fluids
- Corrosive Liquids and Gases
- Super-Heated Process Steam
- High Temperature Processing
- Recovery of Valuable Particulate

ENGINEERING YOUR SUCCESS.

Steelflow™ Filter Cartridges

SPECIFICATIONS

Materials of Construction

Media: 316L Stainless Steel
Support Layers: 316L Stainless Steel
Structure: 316L Stainless Steel

Maximum Differential Pressure

Forward:
250psid (17bar) @ 700°F (371°C)

Reverse:
50psid (3.4bar) @ 700°F (371°C)

Chemical Compatibility

Steelflow is compatible with all chemicals that may be processed using stainless steel.

Operating Temperature Range

Maximum: +700°F (371°C)
Minimum: -450°F (-268°C)

Effective Filtration Area

1.8ft² (0.17m²) per nominal 10 inch (250mm) cartridge.

Regenerable

May be cleaned chemically, mechanically or thermally.

Performance Attributes

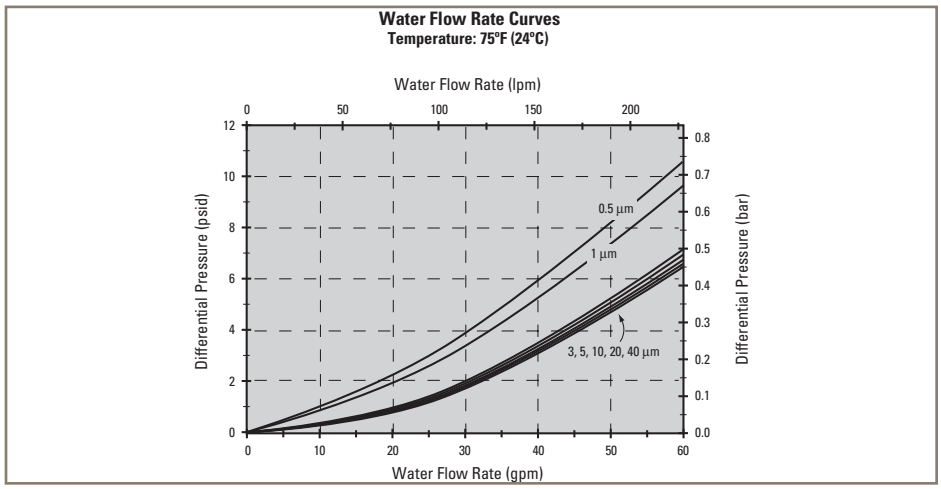

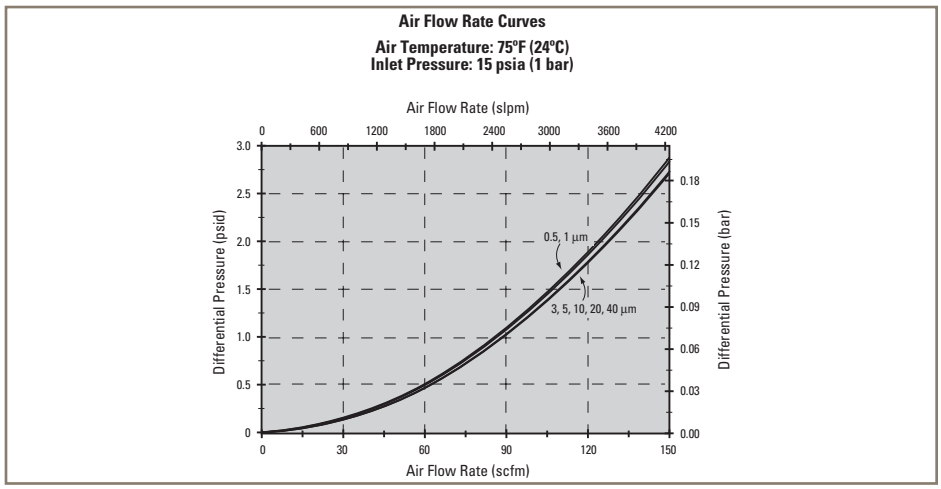

Ordering Information

21 - 10 [ ] [ ] [ ] – [ ] [ ] [ ] – [ ] [ ]

End Fitting	
CODE	**DESCRIPTION**
1	DOE
2	226/Flat
3	222/Flat
7	226/Fin
8	222/Fin
A	SOE w/1″ NPT
B	SOE w/1.5″ NPT

Nominal Length	
CODE	**LENGTH**
10	10″ (250mm)
20	20″ (500mm)
30	30″ (750mm)
40	40″ (1000mm)

Filter Rating	
CODE	MICRON
005	0.5µm
010	1.0µm
030	3.0µm
050	5.0µm
100	10.0µm
200	20.0µm
400	40.0µm

O-Ring	
CODE	MATERIAL
0	Buna-N
1	EPDM
2	Silicone
4	Viton®
5*	FEP-Encapsulated Viton®
6*	FEP-Encapsulated Silicone
N	None

*O-Rings Only

Gaskets	
CODE	THICKNESS
1	0.200″ (5mm)
2	0.125″ (3mm)
4	(1) 0.200″ (5mm)
	(1) 0.125″ (3mm)
N	No Gasket

Specifications are subject to change without notification.
For User Responsibility Statement, see www.parker.com/safety

© 2017 Parker-Hannifin Corporation
Industrial Process Filtration - North America
All Rights Reserved

Viton is a registered trademark of E.I. DuPont de Nemours & Co., Inc.

DS_IP_Steelflow Rev. A

Coalescers

Fulflo® LC Hydrocarbon Liquid-Liquid Coalescer
Optimized for removing water from hydrocarbons or hydrocarbons from water

Naphtha Coalescer
Optimized to remove water from light naphtha natural gas and hydrocarbon applications

Solvent and Caustic Coalescer
Removes carried-over water and caustics from hydrocarbons

Toll free sales & technical support:
940.325.2575
industrialprocess.na@parker.com

Fulflo® LC Hydrocarbon Liquid-Liquid Coalescer

Optimized for removing water from hydrocarbons or hydrocarbons from water

Oil & Gas

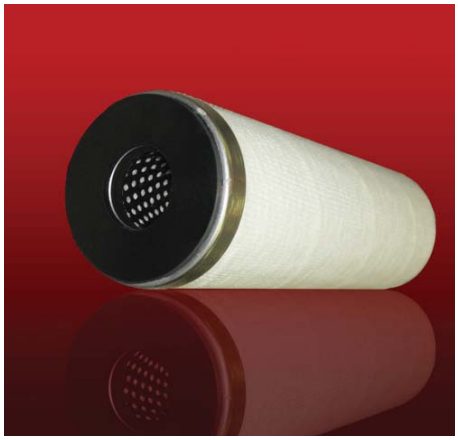

The all synthetic Fulflo® LC Hydrocarbon liquid-liquid coalescers utilize a proprietary, high performance coalescing media in a pleated configuration to improve performance. The liquid-liquid coalescers are designed to remove water from hydrocarbons or hydrocarbons from water.

Please contact your representative to tailor a coalescer for your specific application.

SPECIFICATIONS	
Length	20", 40", 56", 60"
Outside diameter	6" (152.4 mm)
Maximum differential pressure	2.4 bar (35 psi) at 20°C (68°F)
Recommended change-out	1 bar (15 psi)
End caps	DOE, SOE, threaded base (TB), & high flow style
Media	Proprietary, all synthetic pleated coalescing media
Micron rating	10.0, 2.0, 1.0, 0.3
Absolute removal efficiencies	99.9% with maximum 15 ppm at outlet

Performance and specifications have been calculated in a laboratory environment which may not represent actual field results.

Contact Information

Parker Hannifin Corporation
Industrial Process Filtration - N.A.
5177 Richmond Avenue, Suite 1145
Houston, TX 77056

phone +1 713 255 1801
fax +1 713 255 7257
kiran.emmi@parker.com

Parker Hannifin Corporation
Industrial Process Filtration - N.A.
118 Washington Avenue
Mineral Wells, TX 76067

phone +1 940 325 2575
industrialprocess.na@parker.com

www.parker.com/industrialprocess

Performance

- Absolute micron rating: down to 0.3 water droplets
- Water removal efficiency: 99% to 99.9%
- 100% removal of solids and liquids larger than 3µm
- Removes water down to 10 ppm, depending on application

Applications

- Jet fuel/kerosine, gasoline, diesel and other fuels
- Wide variety of hydrocarbons and intermediates
- Removal of carried-over water
- Final products polishing haze removal
- Protection of catalysts, exchangers and equipment

© 2014 Parker-Hannifin Corporation
Industrial Process Filtration - North America
All Rights Reserved
Specifications are subject to change without notification.
For User Responsibility Statement, see www.parker.com/safety

DS_OG_LC HYDRO 5/14 Rev. 1B

ENGINEERING YOUR SUCCESS.

This page is intentionally blank.

Toll free sales & technical support:
940.325.2575

industrialprocess.na@parker.com

www.parker.com/industrialprocess

Naphtha Coalescer

Optimized to remove water from light naphtha natural gas and hydrocarbon applications

Oil & Gas

Parker domnick hunter's high performance Naphtha Coalescer is designed to remove water from light naphtha or heavy naphtha. The proprietary Nylon 66 coalescing media is designed specifically for naphthas, aromatics and hydrocarbon solvents. Because naphthas contain higher ratios of aromatics and may be treated with caustics, common materials of construction used in coalescing elements often are not compatible with naphtha.

Please contact your representative to tailor a coalescer for your specific application.

SPECIFICATIONS	
Length	20-½" & 40-½", nominal (520.7 & 1028.7 mm)
Outside diameter	3-¾" (95.25 mm) (4-¼" (108 mm) Flange)
Recommended change-out	0.9 bar (12.5 psi)
End caps	Stainless steel "LC Style" Single Open End, external O-Ring
Maximum temperature	300 °F (148 °C)
Initial pressure drop	Less than 2 psid
Inlet water concentration	Up to 3% water (30.000 ppm)
Pleated coalescing media	Nylon 66 or epoxy-binder microfiber glass combined with nylon 66 media
Core	Stainless steel

Performance and specifications have been calculated in a laboratory environment which may not represent actual field results.

Contact Information

Parker Hannifin Corporation
Industrial Process Filtration - N.A.
5177 Richmond Avenue, Suite 1145
Houston, TX 77056

phone +1 713 255 1801
fax +1 713 255 7257
kiran.emmi@parker.com

Parker Hannifin Corporation
Industrial Process Filtration - N.A.
118 Washington Avenue
Mineral Wells, TX 76067

phone +1 940 325 2575
industrialprocess.na@parker.com

www.parker.com/industrialprocess

Performance

- Removes aerosol sized droplets and particulate down to 0.3 µm
- Water removal efficiency: 99% to 99.9%
- 100% Removal of solids and liquids larger than 4 µm of 18 µm

Applications

- Diesel
- Light straight-run naphtha
- Heavy straight-run naphtha
- Condensate, reformate
- Light catalytic cracked naphtha (LCN)
- Production of gasoline, jet fuel, ethylene, propylene

© 2014 Parker-Hannifin Corporation
Industrial Process Filtration - North America
All Rights Reserved
Specifications are subject to change without notification.
For User Responsibility Statement, see www.parker.com/safety

DS_OG_NAPHTHA 5/14 Rev. 1B

ENGINEERING YOUR SUCCESS.

This page is intentionally blank.

Toll free sales & technical support:
940.325.2575

industrialprocess.na@parker.com

www.parker.com/industrialprocess

Solvent and Caustic Coalescer

Removes carried-over water and caustics from hydrocarbons

Oil & Gas

Parker domnick hunter's solvent & caustic coalescer with high performance nylon 66 media is designed to remove carried-over water and caustics from hydrocarbons. Common materials of construction used in coalescing elements are often not compatible with aromatics. The proprietary nylon 66 coalescing media is designed specifically for aromatics and caustics.

Please contact your representative to tailor a coalescer for your specific application.

SPECIFICATIONS	
Length	20", 40", 56", and 60"
Outside diameter	6" (152.4 mm)
Recommended change-out	1 bar (15 psi)
End caps	DOE, SOE, threaded base (TB), & high flow style
Maximum temperature	300 °F (93 °C)
Initial pressure drop	Lower than 0.1 bar (2 psi)
Inlet water concentration	Up to 3% water (30.0000 ppm)
Pleated coalescing media	High performance pleated nylon 66 media
Core	Tin coated carbon steel or stainless steel

Performance and specifications have been calculated in a laboratory environment which may not represent actual field results.

Contact Information

Parker Hannifin Corporation
Industrial Process Filtration - N.A.
5177 Richmond Avenue, Suite 1145
Houston, TX 77056

phone +1 713 255 1801
fax +1 713 255 7257
kiran.emmi@parker.com

Parker Hannifin Corporation
Industrial Process Filtration - N.A.
118 Washington Avenue
Mineral Wells, TX 76067

phone +1 940 325 2575
industrialprocess.na@parker.com

www.parker.com/industrialprocess

Performance

- Absolute micron rating: 3 µm
- Nominal micron rating: 0.8 µm
- Water removal efficiency: 99% to 99.9%
- 100% Removal of solids and liquids larger than 3 µm

Applications

- Removal of water from aromatic hydrocarbons
- Final products
- Protection of catalysts and packing
- Removal of carried-over caustic from caustic treating

© 2014 Parker-Hannifin Corporation
Industrial Process Filtration - North America
All Rights Reserved
Specifications are subject to change without notification.
For User Responsibility Statement, see www.parker.com/safety

DS_OG_SOLVCAU 5/14 Rev. 1B

ENGINEERING YOUR SUCCESS.

This page is intentionally blank.

Toll free sales & technical support:
940.325.2575

industrialprocess.na@parker.com

www.parker.com/industrialprocess

Single Cartridge Filter Vessels

Fulflo® B Filter Vessel
Designed for a wide range of industrial application

Fulflo® BSSB Filter Vessel
Stainless steel vessels for water & corrosive fluid applications

Fulflo® EH Single Cartridge Filter Vessel
304 stainless steel, commerical (non-ASME code) design

Fulflo® High-Pressure Filter Vessel (4.5C)
Ideal for high-pressure liquid & gas applications

Fulflo® "M" Series Filter Vessel
High-pressure single cartridge

Fulflo® TC Stainless Steel Filter Vessel
Stainless steel vessels for use with SOE-222 style filter cartridges

Trufluor™ Filter Vessel
High purity and rugged design for aggressive chemical filtration

Trufluor +™ Filter Vessel
High purity PFA filter housing

Toll free sales & technical support:
940.325.2575
industrialprocess.na@parker.com

Fulflo® B Filter Vessel

Designed for a wide range of industrial applications (non ASME code)

Carbon Steel “B” Vessels feature a single center bolt for quick cartridge changing and in-line connections for easy installation.

Duplex vessels permit independent or parallel shell operation. In addition, they offer the advantage of continuous service because one can be serviced while the other is operating. Manifold vessels work simultaneously in parallel shells to provide higher flow rates with less pressure drop than single-shell models.

Air and gas single-shell vessels feature in-line pipe connections for easy installation and aluminum baffel sleeve deflectors for two-stage moisture removal.

Contact Information

Parker Hannifin Corporation
Industrial Process Filtration - N.A.
118 Washington Avenue
Mineral Wells, TX 76067

phone +1 940 325 2575
industrialprocess.na@parker.com

www.parker.com/industrialprocess

Benefits

- Single center bolt for quick cartridge change
- In-line pipe connection for easy installation
- Optional integrally cast brackets for easy mounting
- Drains and vents standard on all models
- Standard Buna-N closure gasket material with optional Viton®,* Neoprene and fluoropolymer gaskets available
- Spring-loaded bottom seats for positive cartridge sealing
- Duplex vessels for continuous service
- Manifold unit for increased flow
- B-Series filter vessels take standard DOE cartridges

Applications

- Petrochemicals
- Coolants
- Hydraulic Oils
- Process Water
- Solvents
- Potable Liquids
- Compressed Air

ENGINEERING YOUR SUCCESS.

Fulflo® B Filter Vessel

Bracketed Head Dimensions (in)

Code	NPT ¼	NPT ¾
D	1.50	2.19
C	4.19	4.31

Note: Flow factors are the same for all ratings.
Center core ID & length are primary flow restrictions.

Optional Shell O-Ring/Gasket	
Material	**Part #**
Nitrile/Buna-N (Std.)	2620-5045
FKM (Viton®)	2620-5058
Glass-filled Fluoropolymer	2620-5056
Neoprene	2620-5042
Rubber	2620-5344
Non-asbestos substitute	2620-5054

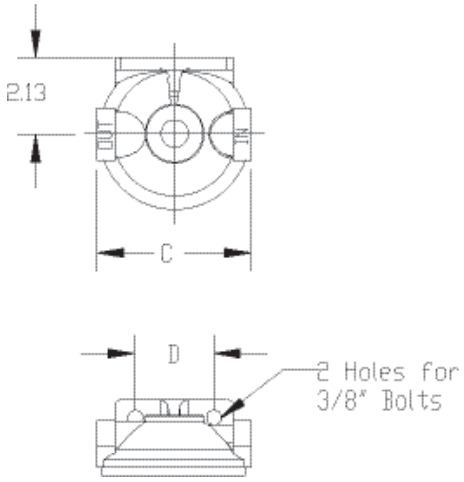

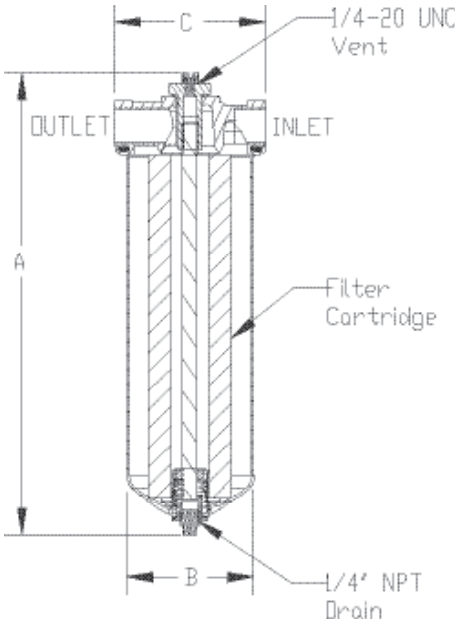

Duplex (BDX1) Design Specifications

Model	Aqueous Flow† (gpm)	Cartridge Length (in)	Pipe Size NPT (in)	Max. Op. Pressure (psi @ 200°F)	Max. Op. Pressure (psi @ 250°F)	Overall Height (in)	Shipping Wt. (lbs)
BDX1-10-½ SD	5/10	(2) 10	½	150psi (10.3bar)	100psi (6.9bar)	13.75	16
BDX1-10-¾ SD	5/10	(2) 10	¾	150psi (10.3bar)	100psi (6.9bar)	13.75	16
BDX1-20-½ SD	10/20	(2) 20	½	150psi (10.3bar)	100psi (6.9bar)	23.75	23
BDX1-20-¾ SD	10/20	(2) 20	¾	150psi (10.3bar)	100psi (6.9bar)	23.75	23

† Actual flow rate is dependent on fluid viscosity, micron rating, contaminant and media type.

Design Specifications

Model	Rated Capacity*	Cartridge Qty. & Length (in)	Max. Op. Pressure (psi @ 200°F)	Max. Op. Pressure (psi @ 250°F)	(A) Overall Height (in)	(B) Outside Diam.	(C) Face-to-Face Dim. (in)	Pipe Size (NPT) (in)	Shipping Wt. (lbs)
AIR & OTHER GASES									
B3A-(¼ or ⅜) SD	65scfm	(1) 3	125psi (8.6bar)	N/A	7.0	3.63	4.19	¼ - ⅜	3.0
B5A-(½ or ¾) SD	110scfm	(1) 5	125psi (8.6bar)	N/A	9.25	3.63	4.31	½ - ¾	3.75
B7A-(¾ or 1) SD	150scfm	(1) 7	125psi (8.6bar)	N/A	11.38	3.63	4.5	¾ - 1	5.25
LIQUIDS									
B10-¾ SD	5gpm	(1) 10	150psi (10.3bar)	100psi (6.9bar)	12.88	3.63	4.31	¾	6.0
B20-¾ SD	10gpm	(1) 20	150psi (10.3bar)	100psi (6.9bar)	23.0	3.63	4.31	¾	9.25
B10-1 SD	5gpm	(1) 10	150psi (10.3bar)	100psi (6.9bar)	13.25	3.63	4.5	1	6.0
B20-1 SD	10gpm	(1) 20	150psi (10.3bar)	100psi (6.9bar)	23.25	3.63	4.5	1	9.25

Note: B3A, B5A and B7A vessels supplied with 10µm Fulflo wound cotton cartridge

*Maximum flow rate for gases based on air at 70°F (21°C) and maximum operating pressure with initial pressure loss of 3psig (.2bar) with a 5µm viscose wound depth filter cartridge.

Specifications are subject to change without notification.
For User Responsibility Statement, see www.parker.com/safety

DUPLEX

BDX1 [ ] – [ ] S D

Design Series	
BDX1	Duplex

Cartridge Length	
CODE	Inches
10	10"
20	20"

Connection Size (Inches)
½"
¾"

Spring-Loaded Seal

Drain

AIR & OTHER GASES

B [ ] – [ ] S D

Design Series	
B	Carbon Steel

Cartridge Length	
CODE	Inches
3A	3"
5A	5"
7A	7"

Connection Size (Inches)	
Std. Head	Bracketed Head (B)
3A	
¼ or ⅜	¼B
5A	
½ or ¾	-
7A	
¾ or 1	¾B

Spring-Loaded Seal

Drain

Note: B3A, B5A and B7A vessels supplied with 10µm Fulflo wound cotton cartridge

LIQUIDS

B [ ] – [ ] S D

Design Series	
B	Carbon Steel

Cartridge Length	
CODE	Inches
10	10"
20	20"

Connection Size (Inches)	
Std. Head	Bracketed Head (B)
¾ or 1	¾B

Spring-Loaded Seal

Drain

Specifications are subject to change without notification.
For User Responsibility Statement, see www.parker.com/safety

© 2010 Parker-Hannifin Corporation
domnick hunter Process Filtration - North America
All Rights Reserved

Fulflo is a registered trademark of Parker-Hannifin Corporation
Viton is a registered trademark of E.I. DuPont de Nemours & Co., Inc.

This page is intentionally blank.

Toll free sales & technical support:
940.325.2575

industrialprocess.na@parker.com

www.parker.com/industrialprocess

Fulflo® BSSB Filter Vessel

Stainless steel vessels for water & corrosive fluid applications (non ASME code)

The BSSB models have a 316 stainless steel shell and a four-boss 316 stainless steel head for applications where an all-stainless steel construction is required. The single center bolt allows for quick cartridge change-out while the in-line connections provide for easy installation.

Contact Information

Parker Hannifin Corporation
Industrial Process Filtration - N.A.
118 Washington Avenue
Mineral Wells, TX 76067

phone +1 940 325 2575
industrialprocess.na@parker.com

www.parker.com/industrialprocess

Benefits

- Single center bolt for quick cartridge change
- In-line pipe connections for easy installation
- Bracket kit for installation on drilled head bosses for easy mounting
- Spring-loaded bottom seat for positive cartridge sealing
- O-ring closure seal provides positive sealing
- BSSB Series filter vessels take standard DOE cartridges

Applications

- Petrochemicals
- Coolants
- Hydraulic Oils
- Process Water
- Solvents
- Potable Liquids
- Compressed Air

ENGINEERING YOUR SUCCESS.

Fulflo® BSSB Filter Vessel

Head

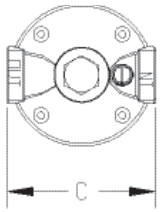

Head with Optional Mounting Bracket

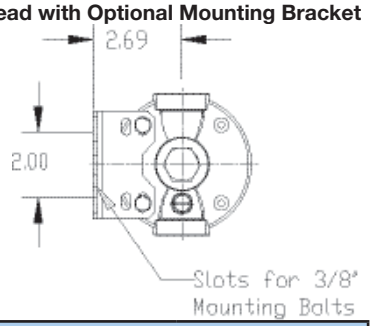

Flanged Head Connection

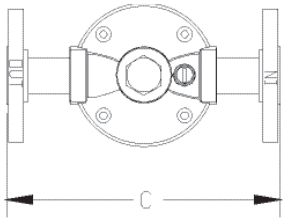

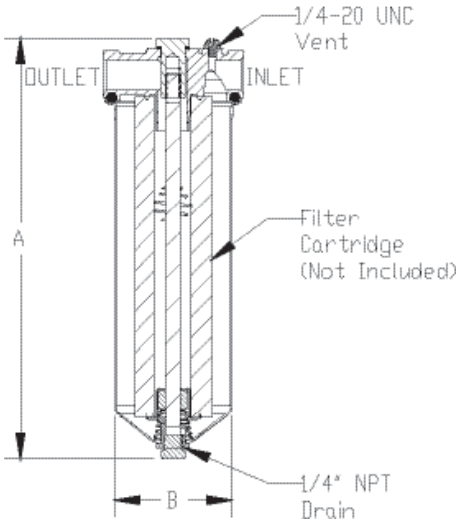

Optional Shell O-Ring/Gasket	
Material	**Part #**
Nitrile/Buna-N (Std.)	4150-5178
EPDM	4150-5177
FKM (Viton®)	4150-5179
Fluoropolymer	4150-5226
Fluoropolymer encapsulated Viton®	4150-5361
Fluoropolymer encapsulated Silicone	4150-5382

BSSB Design Specifications

Model	Typical Aqueous Flow† (gpm)	Cartridge Length (in)	Max. Op. Pressure (psi @ 250°F)	Max. Op. Pressure (psi @ 200°F)	(A) Overall Height (in)	(B) Outside Diam. (in)	(C) Face-to-Face Dim. (in)	Port Size (in)	Shipping Wt. (lbs)
BSSB10-¾ SD	5	(1) 10	150psi (10.3bar)	175psi (12.1bar)	12.75	3.63	4.31	¾ FNPT	6.0
BSSB20-¾ SD	10	(1) 20	150psi (10.3bar)	175psi (12.1bar)	22.88	3.63	4.31	¾ FNPT	10.50
BSSB30-¾ SD	15	(1) 30	150psi (10.3bar)	175psi (12.1bar)	33.25	3.63	4.31	¾ FNPT	15.00
BSSB10-1 SD	5	(1) 10	150psi (10.3bar)	175psi (12.1bar)	13.0	3.63	4.5	1 FNPT	6.0
BSSB20-1 SD	10	(1) 20	150psi (10.3bar)	175psi (12.1bar)	23.13	3.63	4.5	1 FNPT	10.50
BSSB30-1 SD	15	(1) 30	150psi (10.3bar)	175psi (12.1bar)	33.25	3.63	4.5	1 FNPT	15.00
BSSB10-¾ FSD	5	(1) 10	150psi (10.3bar)	175psi (12.1bar)	12.75	3.63	8.0	¾ Flange	9.0
BSSB20-¾ FSD	10	(1) 20	150psi (10.3bar)	175psi (12.1bar)	22.88	3.63	8.0	¾ Flange	13.5
BSSB30-¾ FSD	15	(1) 30	150psi (10.3bar)	175psi (12.1bar)	33.25	3.63	8.0	¾ Flange	18.0
BSSB10-1 FSD	5	(1) 10	150psi (10.3bar)	175psi (12.1bar)	12.75	3.63	8.0	1 Flange	9.0
BSSB20-1 FSD	10	(1) 20	150psi (10.3bar)	175psi (12.1bar)	22.88	3.63	8.0	1 Flange	13.5
BSSB30-1 FSD	15	(1) 30	150psi (10.3bar)	175psi (12.1bar)	33.25	3.63	8.0	1 Flange	18.0

† Actual flow rate is dependent on fluid viscosity, micron rating, contaminant and media type.

Ordering Information

BSSB [ ] – [ ] [ ] **S** **D**

Cartridge Length	
CODE	**Inches**
10	10
20	20
30	30

Connection Size
¾"
1"

Connection Type	
CODE	**DESCRIPTION**
Blank	NPT
F	Flange

Spring-Loaded Seal

Drain

Specifications are subject to change without notification.
For User Responsibility Statement, see www.parker.com/safety

© 2017 Parker-Hannifin Corporation
Industrial Process Filtration - North America
All Rights Reserved

Fulflo is a registered trademark of Parker-Hannifin Corporation
Viton is a registered trademark of E.I. DuPont de Nemours & Co., Inc.

DS_IP_BSSB Vessel Rev. A

Fulflo® EH Single Cartridge Filter Vessel

304 & 316 stainless steel, commercial (non ASME code) design

The Fulflo EH non-code single cartridge filter vessels provide economical filtration of a wide variety of liquids in a lightweight, small profile, clamp closure design.

The EH vessels accept a single 10" or 20" long, double open end (DOE) or 222 single open end (SOE) filter cartridge. A 226 option is also available.

These vessels are manufactured from polished stainless steel and rated for 100 psi (6.9 bar).

Contact Information

Parker Hannifin Corporation
Bioscience Division - N.A.
2340 Eastman Avenue
Oxnard, CA 93030

phone +1 805 604 3583
bioscience.na@parker.com

www.parker.com/bioscience

Benefits

- Convertible design allows for the use of both DOE and 222 SOE cartridges. A 226 option is also available
- Clamped o-ring closure seal provides quick and positive seal
- In-line 1" FNPT threaded pipe connections for easy installation
- Head mounting kit included
- EPDM seals are standard with other material options available

Applications

- Potable Water
- Lubricants
- Process Water
- Coolants
- Edible Oils
- Cutting Oils
- Coatings
- Solvents

ENGINEERING YOUR SUCCESS.

Fulflo® EH Single Cartridge Filter Vessel

Number of Cartridges
(1) x 10" or 20" lg x 2.75" Max OD

Connection sizes
1" NPT inlet & outlet
¼" NPT vent & drain

Material of Construction	Max. Allowable Pressure (MAP) (psi @ MAT °F)	Max. Allow Temp. (MA (°F @ MAP
304/316 SST	100 psi (6.9 bar)	300°F (149

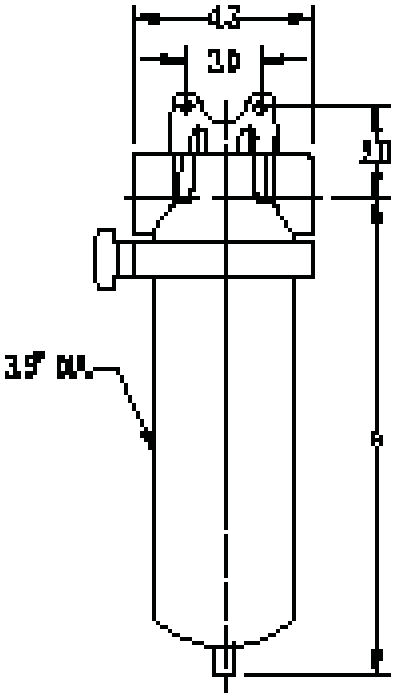

Typical aqueous flow	
Length Code	**Capacity (gpm)**
S	5
D	10

O-ring Temperature Guide	
Material	**Max. Temp.**
Nitrile (Buna-N)	250°F (121°C)
EPDM (EPR)*	300°F (149°C)
FKM (Viton®)	400°F (204°C)**

* EPDM o-ring is standard
**Vessel temperature limited to 300°F (149°C)

Cartridge Configurations	
222 O-ring SOE 226 O-ring SOE	PP spring closed end**
	Flat*
DOE	Standard

*Not recommended for 222 style
**Not required for 226 style

Length Code	A*	Weight (lbs)
S	14	9
D	24	11

*Add 1" for 226

Ordering Information

EH [ ] **01** [ ] [ ] [ ] – [ ]

Material of Construction	
Code	**Description**
G	304 SST
S	316 SST

Cartridge Qty.
1

Element Length	
Size	**Inches**
S	10
D	20

Inlet/Outlet Connection	
Code	**Size**
1T	1" NPT

Cartridge Style	
Code	**Style**
Blank	DOE/SOE 222
226*	226 bayonet

*Only available in 304SS

Replacement Parts	
Part Number	**Description**
4150-5836-E	O-ring, Cover EPDM
4150-5836-N	O-ring, Cover Buna-N
4150-5836-V	O-ring, Cover FKM (Viton®)
1390-5046	Clamp 304SS
0720-5301	Center Rod 10" - 304SS
0720-5307	Center Rod 10" - 316SS
0720-5302	Center Rod 20" - 304SS
0720-5308	Center Rod 20" - 316SS
0821-5526	Mounting Bracket - 304SS
5830-5194	Spring Seal Assembly - 304SS
5830-5195	Spring Seal Assembly - 316SS
5320-5401	Seal Nut 304SS
5320-5407	Seal Nut 316SS

Specifications are subject to change without notification.
For User Responsibility Statement, see www.parker.com/safety

© 2017 Parker-Hannifin Corporation
Bioscience Division - North America
All Rights Reserved

Fulflo is a registered trademark of Parker-Hannifin Corporation
Viton is a registered trademark of E.I. DuPont de Nemours & Co., Inc.

Fulflo® High-Pressure Single Cartridge Filter Vessel (4.5C)

Design ideal for high-pressure liquid & gas applications (non ASME code)

Ideal for a wide range of industrial machinery and process industry applications, these vessels combine extremely high-pressure rating capability with ease of installation and rugged durability.

Contact Information

Parker Hannifin Corporation
Industrial Process Filtration - N.A.
118 Washington Avenue
Mineral Wells, TX 76067

phone +1 940 325 2575
industrialprocess.na@parker.com

www.parker.com/industrialprocess

Benefits

- 4.5C features multiple bolt closure to meet high-pressure requirements
- In-line pipe connections for easy installation
- Available in carbon steel and 316 stainless steel materials
- Spring-loaded bottom seats for positive cartridge sealing
- Drain and vent standard on all models
- Vessels accept a single 10″ or 20″ DOE (double-open-end) seal elements

Applications

- Petrochemicals
- Coolants
- Hydraulic Oils
- Process Water
- Solvents
- Other High-Pressure Liquids

ENGINEERING YOUR SUCCESS.

Fulflo® High-Pressure Single Cartridge Filter Vessel

Optional Shell O-Ring/Gasket	
Material	**Part #**
FKM (Viton®)	2620-5058
Klingersil C-4401 (Std.)	2620-5054
Glass-filled Fluoropolymer	2620-5056
Neoprene	2620-5042
Rubber	2620-5344

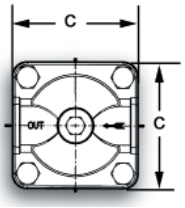

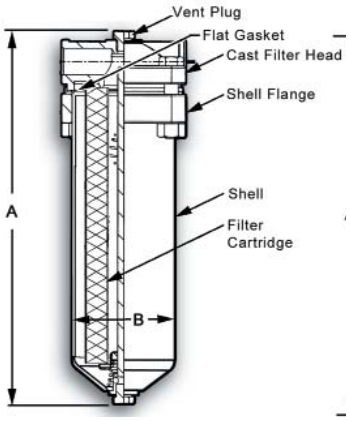

Design Specifications

Model	Rated Capacity† (gpm)	Wound Depth Cartridge Length (in)	Max. Op. Pressure	Max. Op. Temperature	A Overall Height (in)	B Outside Diam. (in)	C Face-to-Face Dim. (in)	Pipe Size (NPT) (in)	Shipping Weight (lbs)
4.5C10-¾ SD	5	(1) 10	450psi (31bar)	400°F (204°C)	13.31	3.63	4.38	¾	9
SS4.5C10-¾ SD	5	(1) 10	450psi (31bar)	400°F (204°C)	13.31	3.63	4.38	¾	10
4.5C20-¾ SD	10	(1) 20	450psi (31bar)	400°F (204°C)	29.19	3.63	4.38	¾	12.25
SS4.5C20-¾ SD	10	(1) 20	450psi (31bar)	400°F (204°C)	29.19	3.63	4.38	¾	13.25

† Actual flow rate is dependent on fluid viscosity, micron rating, contaminant and media type.

Ordering Information

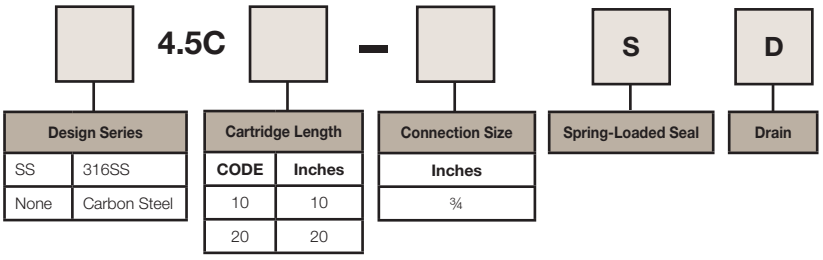

Specifications are subject to change without notification.
For User Responsibility Statement, see www.parker.com/safety

© 2017 Parker-Hannifin Corporation
Industrial Process Filtration - North America
All Rights Reserved

Fulflo is a registered trademark of Parker-Hannifin Corporation

Fulflo® "M" Series Single Cartridge Vessels

ASME code high-pressure single cartridge

Parker's "M" Series Single Cartridge Filter Vessels are designed for a broad range of high pressure industrial and chemical process applications. All details of design, materials, construction and workmanship comply with the ASME code for pressure vessels. The "M" series is available with and without the ASME stamp.

Benefits

- ASME design to insure integrity, available with and without the ASME stamp
- T-Style head and shell for ease of installation and servicing
- Standard O-Ring closure seal is Buna-N, with optional materials available for improved chemical compatibility and higher temperature rating
- Flanged or threaded connections to suit installation requirements and preference
- Optional 150, 300 or 600 lb. RFSO flange connections for installation flexibility
- 1-inch connections for maximum flow capability of filter cartridges
- Utilizes one 10-, 20- or 30-inch cartridge
- Multiple bolt closure with bright zinc plated studs
- Optional single-open-end (SOE 2-222 TC Style) cartridge adapter for positive sealing of high efficiency filter cartridges
- Wide range of cartridge media available for process clarity control and chemical compatibility
- Rigid cartridge support post with threaded end seal for positive double open end (DOE) cartridge seating

Contact Information

Parker Hannifin Corporation
Industrial Process Filtration - N.A.
118 Washington Avenue
Mineral Wells, TX 76067

phone +1 940 325 2575
industrialprocess.na@parker.com

www.parker.com/industrialprocess

Applications

- Chemicals
- Catalyst Recovery
- Solvents
- Cutting Oils
- Other High Pressure Liquids
- Process Water
- Lubricants
- Coolants
- Hydraulic Oils
- Compressed Air and Gases

ENGINEERING YOUR SUCCESS.

Fulflo® "M" Series Single Cartridge Vessels

SPECIFICATIONS

Carbon steel or 316 stainless steel material
Drain: ¼ in. NPT
Vent: ¼ in. NPT
Bolting: (4) ⅝-11 UNC bright zinc plated carbon steel
O-ring head to shell seal

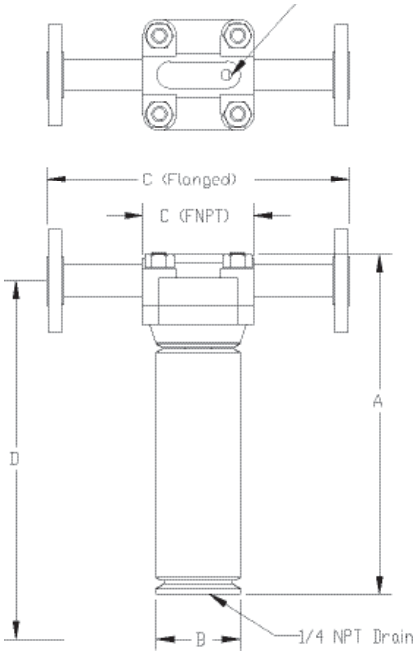

Optional Shell O-Ring/Gasket	
Material	**Part #**
Nitrile/Buna-N (Std.)	4151-1339
EPDM	4154-5339
FKM (Viton®)	4152-8339
Fluoropolymer encapsulated Viton®	4150-5589
Fluoropolymer encapsulated Silicone	4150-5588

Maximum Allowable Working Pressure

Connections	Designation	Carbon Steel @ 250°F (121°C)	316 Stainless Steel @ 250°F (121°C)
FNPT	T	1610psig	1610psig
150 lb. Flange	F	245psig	225psig
300 lb. Flange	H	665psig	590psig
600 lb. Flange	J	1332psig	1180psig

Note:
FNPT maximum pressure is 1610psig at 300°F with EPR O-ring, 400°F with Viton* and FEP encapsulated Viton* O-ring, and 500°F with FEP Encapsulated Silicone. Flanged units (F, H, and J designations) are based on ANSI B16.5 pressure at 250°F (121°C). The flanged versions can also be rated for the higher design temperature in which case the pressure rating will be reduced according to ANSI B16.5. Indicate the desired temperature in degrees F at the end of the model number. The gasket material and flange rating must be changed accordingly.

M Series Flow Rates & Dimensions

Model	Typical Aqueous Flow Rate† (gpm)	Cartridge Length (in)	(A) Height (in)	(B) Outside Diam. (in)	(C) Face-to-Face (in)		Weight (lbs)		(D) Cartridge Removal Clearance (in) ‡
					FNPT	Flanged	FNPT	Flanged	
MC (N or U) 1S	6	10	14.5	3.5	4.62	12.62	37	45	22
MC (N or U) 1D	12	20	24.5	3.5	4.62	12.62	46	54	42
MC (N or U) 1T	18	30	34.5	3.5	4.62	12.62	55	63	62

† Actual flow rate is dependent on fluid viscosity, micron rating, contaminant and media type.

‡ Add 3" when using TC internal option for use with TC style 2-222 O-ring cartridges.

Ordering Information

M [ ]

Material	
C	Carbon Steel
S	316SS

Design	
CODE	Description
N	Non-Code
U	ASME U-Stamp

Columns	
1	1 Element

Length	
CODE	Inches
S	10
D	20
T	30

Inlet | Outlet	
CODE	Inches
1	1

Inlet | Outlet Type	
CODE	Description
T	FNPT
F	Flanged 150#
H	Flanged 300#
J	Flanged 600#
K	Flanged 900#
L	Flanged 1500#
M	Flanged 2500#

Gasket Material	
CODE	Description
N	Buna-N
E	EPR
V	Viton®
T	FEP Encap. Viton®
L	FEP Encap. Silicone

Internal Option	
CODE	Description
Blank	Center Post for DOE
TC	222 O-ring Adapter

Special Temperature for Flanged Units	
CODE	Description
Blank	250° (121°C)

Specifications are subject to change without notification.
For User Responsibility Statement, see www.parker.com/safety

© 2017 Parker-Hannifin Corporation
Industrial Process Filtration - North America
All Rights Reserved

Fulflo is a registered trademark of Parker-Hannifin Corporation
Viton is a registered trademark of E.I. DuPont de Nemours & Co., Inc.

Fulflo® TC Single Cartridge Filter Vessel

Stainless steel vessels for use with SOE-222 style filter cartridges (non ASME code)

The SSTC models have a 316 stainless steel shell and a four-boss 316 stainless steel head for applications where an all-stainless steel construction is required. The vessels feature a head which accepts SOE TC style filter cartridges which eliminates the possibility of fluid bypass.

Contact Information

Parker Hannifin Corporation
Industrial Process Filtration - N.A.
118 Washington Avenue
Mineral Wells, TX 76067

phone +1 940 325 2575
industrialprocess.na@parker.com

www.parker.com/industrialprocess

Benefits

- The vessels are sealed using a ring type threaded closure which requires no special tools to change the cartridges
- Threaded ring closure for quick cartridge change
- 222 seal cup for TC and competitive cartridge sealing (M3, Code 3, Code 0)
- Integrally cast brackets for easy mounting
- Standard Buna-N closure o-ring material with optional Viton, EPR and Silicone available
- Available for use with 10˝, 20˝ and 30˝ cartridge lengths
- Vessel has no internal parts
- Cartridge seating is positive and can be checked prior to closing
- All components have electropolished finish

Applications

- Solvents
- Chemicals
- Potable Water
- Parts Washer

ENGINEERING YOUR SUCCESS.

Fulflo® TC Single Cartridge Filter Vessel

Optional Shell O-Ring/Gasket	
Material	**Part #**
Nitrile/Buna-N (Std.)	4151-1236
EPDM	4154-5236
FKM (Viton®)	4152-8236
Silicone	4151-4236
Fluoropolymer encapsulated Viton®	4154-4236
Fluoropolymer encapsulated Silicone	4150-5617

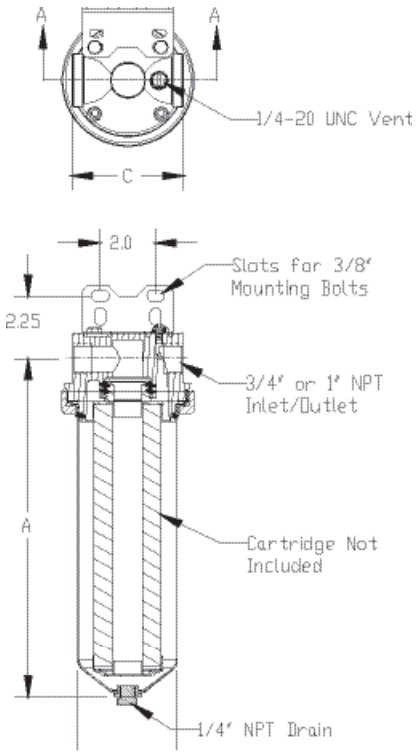

Design Specifications

Part #	Typical Aqueous Flow (gpm)	Cartridge Length (in)	Max. Op. Pressure (psi @ 250°F)	(A) Overall Height (in)	(B) Outside Diam. (in)	(C) Face-to-Face Dim. (in)	Pipe Size (NPT) (in)	Shipping Wt. (lbs)
SSTC10-075	5	10	200psi (13.8bar)	12.25	3.50	3.94	.75	7.80
SSTC20-075	10	20	200psi (13.8bar)	22.38	3.50	3.94	.75	9.00
SSTC30-075	15	30	200psi (13.8bar)	32.50	3.50	3.94	.75	10.20
SSTC10-100	5	10	200psi (13.8bar)	12.25	3.50	3.94	1.00	7.80
SSTC20-100	10	20	200psi (13.8bar)	22.38	3.50	3.94	1.00	9.00
SSTC30-100	15	30	200psi (13.8bar)	32.50	3.50	3.94	1.00	10.20

Ordering Information

SS	TC		–	
Design Series	Cartridge Seal	Cartridge Length		FNPT Connection Size

Design Series	
SS	316SS Shell & Head

Cartridge Seal
222 O-ring/Flat Cap

Cartridge Length	
Code	**Inches**
10	10
20	20
30	30

FNPT Connection Size	
Code	**Inches**
075	¾
100	1

Note: Buna-N is standard seal.

Specifications are subject to change without notification.
For User Responsibility Statement, see www.parker.com/safety

© 2017 Parker-Hannifin Corporation
Industrial Process Filtration - North America
All Rights Reserved

Fulflo is a registered trademark of Parker-Hannifin Corporation
Viton is a registered trademark of E.I. DuPont de Nemours & Co., Inc.

Trufluor™

High purity, rugged design for aggressive chemical filtration (non ASME code)

The simple, yet rugged design of the Trufluor filtration housing is an excellent solution to any aggressive chemical filtration problem. The two-piece design allows for ease of installation and a positive seal.

Series TFH (Trufluor PFA) uses high purity PFA materials of construction to provide the broadest available chemical compatibility and strong mechanical properties with the lowest possible extractables. Use this choice with a fluoropolymer cartridge for an all fluoropolymer filtration system.

Series TVH (Trufluor PVDF) uses polyvinylidene fluoride (PVDF) materials of construction to provide excellent chemical compatibility and superior mechanical properties with the lowest possible extractables.

Both series accept a 10 in. (25.4 cm) 222 o-ring / flat SOE style cartridge. Choice of ¾″ NPT or ¾″ butt weld inlet and outlet connections available.

Contact Information

Parker Hannifin Corporation
Industrial Process Filtration - N.A.
118 Washington Avenue
Mineral Wells, TX 76067

phone +1 940 325 2575
industrialprocess.na@parker.com

www.parker.com/industrialprocess

Benefits

- High purity PFA construction
- Also available in PVDF
- Broad chemical compatibility
- Extremely low extractables
- Standard ¼” gauge connections upstream and downstream

Applications

- High purity acids and bases
- Fine Chemical
- Aggressive solvents
- Acid etch and BOE
- Photomask and Photoresist
  - Chemicals
  - Solvents
  - Developers

ENGINEERING YOUR SUCCESS.

Trufluor™

SPECIFICATIONS

Materials of Construction

Head and Bowl:	High purity PFA
O-Ring:	FEP Encapsulated Viton®
NPT Plugs:	High purity PFA
Threaded Head Inserts:	PTFE coated 316 Stainless steel

Connections

Inlet | Outlet: ¾" NPT or Butt Weld
Vent and Drain: ¼" NPT

Maximum Operating Specifications

TFH (PFA):
65psid (4.5bar) @ 203°F (95°C)
75psid (5.2bar) @ 68°F (20°C)

TVH (PVDF):
110psig @ 203°F (95°C)
150psig @ 68°F (20°C)

Housing Differential Pressure vs. Liquid Flow Rate

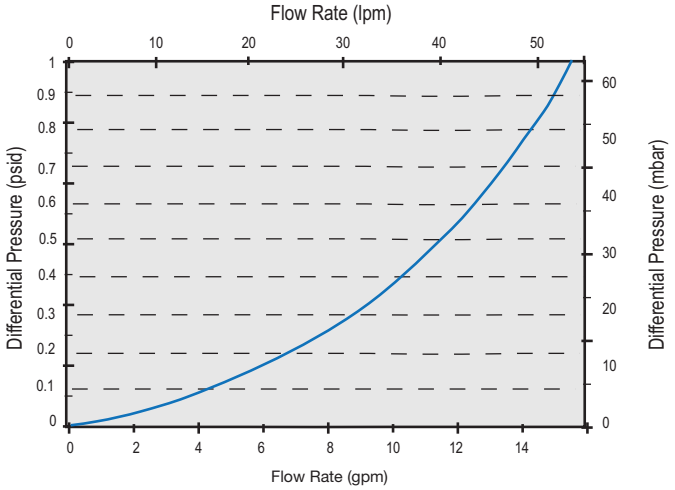

Cartridge Configurations Supported

Size	Description
10″	222 | Flat End Cap SS Reinforced 222 | Flat End Cap

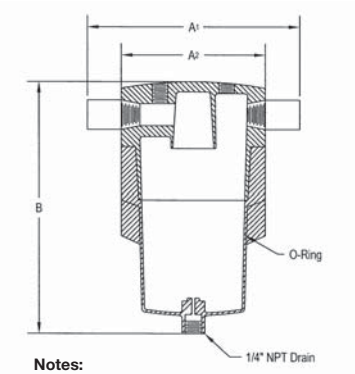

Notes:
1. Dim. A1 = ¾″ Butt-weld
   Dim. A2 = ¾″ NPT

Housing Part#	Overall Width (A)		Overall Length (B)		Minimum Clearance for Cartridge Removal	
	Inches	cm	Inches	cm	Inches	cm
TFH10N08N02T	4-⅞	12.4	16	40.6	13	33.0
TFH10W08N02T	7-21/32	19.4	16	40.6	13	33.0
TVH10N08N02T	4-⅞	12.4	16	40.6	13	33.0
TVH10W08N02T	7-21/32	19.4	16	40.6	13	33.0

This housing is not recommended for compressed air or gas service. It is suitable for use with fully compatible liquids (which do not soften, swell or adversely affect the product or its materials of construction) only. This housing is not recommended for acid service at the pressure shown.

Please contact Parker for detailed compatibility information.

NOTE:
Use of this product in a manner other than in accordance with Parker's current recommendations may lead to injury or loss. Parker cannot accept liability for such injury or loss.

Ordering Information

	10		08		02	T

Model

CODE	DESCRIPTION
TFH	Trufluor PFA
TVH	Trufluor PVDF

Bowl Length

CODE	INCHES
10	10″

Connection Type

CODE	DESCRIPTION
N	NPT
W	Butt -weld

Connection Size

CODE	INCHES (mm)
08	¾″

Drain/Vent Type

CODE	DESCRIPTION
N	NPT
W	Butt-weld

Drain/Vent Size

CODE	INCHES (mm)
02	¼″ (6.35mm)

Seal Material

CODE	DESCRIPTION
T	FEP Encapsulated Viton®

Specifications are subject to change without notification.
For User Responsibility Statement, see www.parker.com/safety

© 2017 Parker-Hannifin Corporation
Industrial Process Filtration - North America
All Rights Reserved

Trufluor is a registered trademark of Parker-Hannifin Corporation
Viton is registered trademark of E.I. DuPont de Nemours & Co., Inc.

Trufluor™ +

High purity PFA filter housing (non ASME code)

The Trufluor™+ filter housing is designed for maximum chemical resistance and high purity. Constructed of PFA (wetted parts) and PVDF (non-wetted parts), this housing is compatible with the most aggressive chemistries. The high-purity materials of construction and cleanroom packaging insure a high level of cleanliness. The housing consists of a stationary bowl and locking ring that provides a positive seal and easy filter replacement. It is compatible with our Fluoroflow® line of all-fluoropolymer cartridges including the large-diameter Fluoroflow®-XL in lengths of 10, 20 and 30 inches.

Contact Information

Parker Hannifin Corporation
Industrial Process Filtration - N.A.
118 Washington Avenue
Mineral Wells, TX 76067

phone +1 940 325 2575
industrialprocess.na@parker.com

www.parker.com/industrialprocess

Benefits

- Excellent chemical resistance
- High-purity construction
- Packaged in cleanroom
- High flow rates
- Compatible with 2.75″ and 3.25″ diameter cartridges

Applications

- Wet etch and clean (90°C or less)
- Photochemicals
- DI water
- Fine chemical
- Aggressive solvents
- High purity acids & bases

ENGINEERING YOUR SUCCESS.

Trufluor™+

SPECIFICATIONS

Materials of Construction

Head and Bowl: High Purity PFA
O-Ring: FEP Encapsulated Viton®
Locking Ring: PVDF (non-wetted part)

Connections

Inlet/Outlet ¾″ or 1″ Flare
¾″ or 1″ Butt Weld

Vent/Drain ¼″ Flare
¼″ Butt Weld
¼″ NPTF
⅜″ Closed
⅜″ Flare

Maximum Operating Specifications

50psig (3.4bar) at 194°F (90°C)
100psig (6.9bar) at 77°F (25°C)

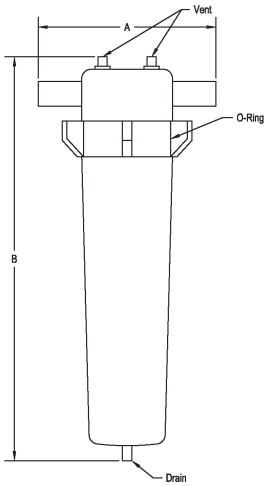

Dimensional Data

10″ Filter		
Housing Style	**Overall Width (A)**	**Overall Length (B)**
¾″ Butt Weld Pipe	9.0″ | 22.9 cm	16.0″ | 40.6 cm
¾″ Flare	10.5″ | 26.7 cm	19.5″ | 49.5 cm
1″ Butt Weld Pipe	9.0″ | 22.9 cm	16.0″ | 40.6 cm
1″ Flare	11.0″ | 27.9 cm	19.5″ | 49.5 cm
20″ Filter		
Housing Style	**Overall Width (A)**	**Overall Length (B)**
¾″ Butt Weld Pipe	12.0″ | 30.5 cm	25.7″ | 65.3 cm
¾″ Flare	10.5″ | 26.7 cm	29.3″ | 74.4 cm
1″ Butt Weld Pipe	9.0″ | 22.9 cm	25.7″ | 65.3 cm
1″ Flare	11.0″ | 27.9 cm	29.3″ | 74.4 cm
30" Filter		
Housing Style	**Overall Width (A)**	**Overall Length (B)**
¾″ Butt Weld Pipe	12.0″ | 30.5 cm	35.5″ | 90.2 cm
¾″ Flare	10.5″ | 26.7 cm	39.1″ | 99.3 cm
1″ Butt Weld Pipe	9.0″ | 22.9 cm	35.5″ | 90.2 cm
1″ Flare	11.0″ | 27.9 cm	39.1″ | 99.3 cm

Cartridge Configurations Supported

Length (in)	Cartridge Style
10	222/Flat End Cap SS Reinforced 222/Flat End Cap
20	
30	

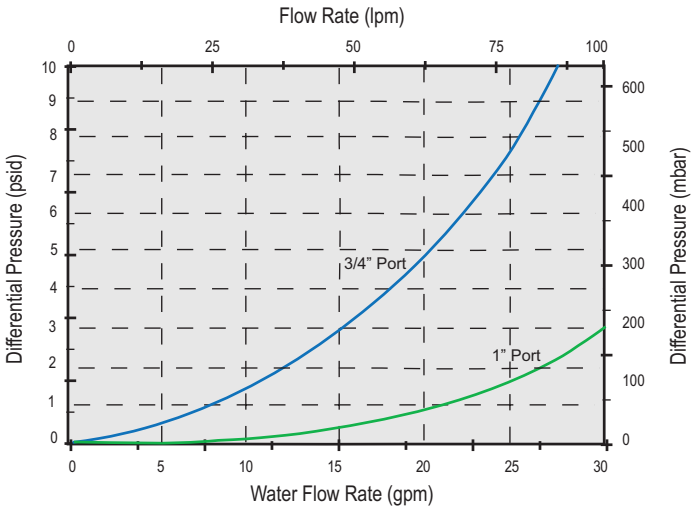

Ordering Information

TFP [ ] [ ] [ ] [ ] [02] [T]

Bowl Length	
CODE	**Inches (mm)**
10	10" (254mm)
20	20" (508mm)
30	30" (762mm)

Connection Type	
CODE	**Description**
F	Flare
W	Butt Weld

Connection Size	
CODE	**Inches (mm)**
08	¾" (19.05mm)
10	1" (25.40mm)

Drain | Vent Type	
CODE	**Description**
C	Closed*
F	Flare*
W	Butt Weld
N	NPTF

*Additional charges apply

Drain | Vent Size	
CODE	**Inches (mm)**
02	¼" (6.35mm)

Seal Material	
CODE	**Description**
T	FEP Encapsulated Viton®

Specifications are subject to change without notification.
For User Responsibility Statement, see www.parker.com/safety

© 2017 Parker-Hannifin Corporation
Industrial Process Filtration - North America
All Rights Reserved

Trufluor is a registered trademark of Parker-Hannifin Corporation
Viton is registered trademark of E.I. DuPont de Nemours & Co., Inc.

Multi-Cartridge Filter Vessel Series

ASME code and non-code vessels in a range of configurations for many liquid, compressed air & gas applications

Fulflo® CH Filter Vessel
Carbon steel, 304 & 316 stainless steel non-ASME code

Fulflo® CP Filter Vessel
Carbon steel single element oil filter vessel

Fulflo® EH Multi-Cartridge Filter Vessel
304 stainless steel, commerical (non-ASME code) design

Fulflo® FE Filter Vessel
Designed for economical filtration of liquids and gases

Fulflo® FP Filter Vessel
Economical liquid filtration design

Fulflo® HT Filter Vessel
ASME code filter vessel for high temperature fluids

Fulflo® Mega Flow Filter Vessel
High flow capacity design

Fulflo® MP Filter Vessel
R.O. pre-filter membrane protector

Fulflo® P Filter Vessel
High efficiency/high flow rate design

Fulflo® ParMax™ Vessel
High flow capacity design

Fulflo® S Filter Vessel
ASME code for liquid and gas

Fulflo® SF Filter Vessel
High flow rate ASME code design

Fulflo® WH Filter Vessel
304 & 316 stainless steel non-ASME

Toll free sales & technical support:
940.325.2575
industrialprocess.na@parker.com

Fulflo® CH Multi-Cartridge Filter Vessel

Carbon steel, 304 and 316 stainless steel filter vessel (non ASME code)

The Fulflo® CH non-code filter vessels are lightweight and provide economical filtration of liquids. The vessel features the integrity of a swing bolt for fast, easy opening and closing. It comes with standard zinc plated bolts and legs for corrosion resistance but is also offered with stainless steel options. Wall mounting brackets are available as well.

The Fulflo CH vessel series accommodates either double-open-end (DOE) or single-open-end (SOE) 222/flat or 222 flex fin filter cartridges in 10 inch, 20 inch or 30 inch lengths.

The CH filter vessel series replaces the FH filter vessel series.

Contact Information

Parker Hannifin Corporation
Industrial Process Filtration - N.A.
118 Washington Avenue
Mineral Wells, TX 76067

phone +1 940 325 2575
industrialprocess.na@parker.com

www.parker.com/industrialprocess

Benefits

- Single O-ring design closure assures quick, positive cover sealing
- Swing bolts for fast and easy opening and closing of cover
- Pivot pin cover allows cover to remain attached when opened
- Commercial engineering design - Non-code
- Zinc plated closure bolts and legs for corrosion resistance
- Adjustable leg height
- Standard features include vent, clean drain & dirty drain connections
- Optional mounting wall bracket (P/N 0820-6005)

Applications

- Potable Water
- Lubricants
- Process Water
- Coolants
- Edible Oils
- Cutting oils
- Coatings
- Solvents

ENGINEERING YOUR SUCCESS.

Fulflo® CH Multi-Cartridge Filter Vessels

Available Finishes
- Enamel exterior paint on carbon steel models
- Glass bead blast finish on stainless models

Number of Cartridges
Five 10 inch, 20 inch or 30 inch x 2.70″ OD (Max) end caps

Product Configurations
Pipe size or connection:
2″ NPT inlet & outlet
½″ NPT vent
¾″ NPT drain

Fulflo® CH Vessel Series Rated Capacity
25gpm, 50gpm, 75gpm

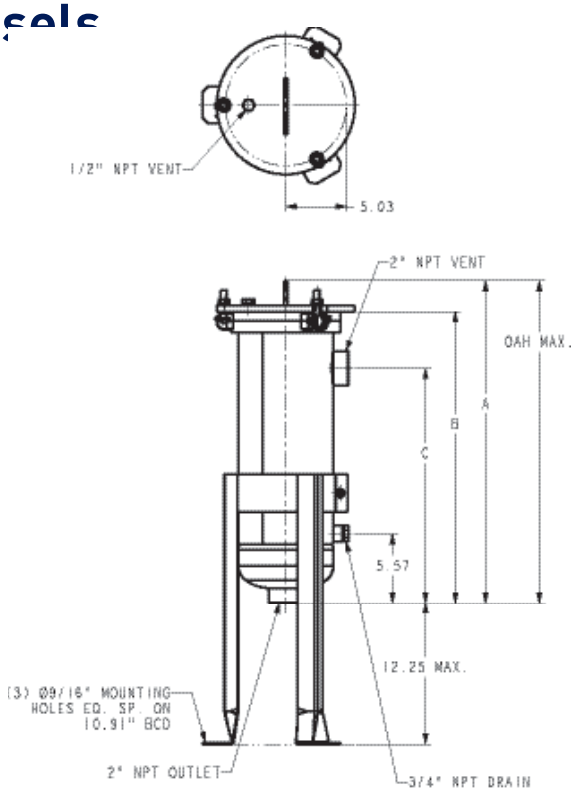

Cartridge Configurations	
222 O-ring SOE	Flat
	PP spring closed end
	Flex fin
Gasket SOE	PP spring closed end
DOE	Standard
	Extended Core

Optional Shell O-Ring/Gasket*	
Material	**Part #**
Nitrile/Buna-N (Std.)	4150-5706
EPDM	4150-5708
FKM (Viton®)	4150-5707
Fluoropolymer	4150-5790

**Optional O-ring shipped separately*

Model	Dimensions			Shipping Wt. (lbs)
	A	B	C	
CHC5S2T	26	23.5	19.00	57
CHC5D2T	36	33.5	29.00	67
CHC5T2T	46	43.5	39.00	77
CHG5S2T	26	23.5	19.00	57
CHG5D2T	36	33.5	29.00	67
CHG5T2T	46	43.5	39.00	77
CHS5S2T	26	23.5	19.00	57
CHS5D2T	36	33.5	29.00	67
CHS5T2T	46	43.5	39.00	77

Material of Construction	Max. Allowable Pressure (MAP) (psi @ MAT °F)	Max. Allowable Temp. (MAT) (°F @ MAP psi)
Carbon Steel	175psi (12.1bar)	400°F (204°C)* **
304 Stainless	175psi (12.1bar)	400°F (204°C)**
316 Stainless	175psi (12.1bar)	400°F (204°C)**

*Limited to 250°F by the paint

**Limited to 250°F by the standard Buna-N O-ring

Ordering Information

CH [ ] **5** [ ] [ ] [ ]

Material	
Code	**Description**
C	Carbon Steel
G	304 Stainless Steel
S	316 Stainless Steel

Element Length	
Code	**Inches**
S	10
D	20
T	30

Inlet/Outlet Size	
Code	**Inches**
2T	2″ NPT

Support Options	
Code	**Description**
Blank	Zinc plated carbon steel legs
W	Wall Mounted/No legs
SL	Stainless steel legs
SB	Stainless steel cover bolts
SS	Stainless steel bolts & legs

Example Part# Configuration for Orders (no dashes):
CHC5S2T
CHG5D2TSL

Specifications are subject to change without notification.
For User Responsibility Statement, see www.parker.com/safety

© 2017 Parker-Hannifin Corporation
Industrial Process Filtration - North America
All Rights Reserved

Fulflo is a registered trademark of Parker-Hannifin Corporation
Viton is a registered trademark of E.I. DuPont de Nemours & Co., Inc.

Fulflo® CP Multi-Cartridge Filter Vessel

Carbon steel, non-ASME code oil filter vessel

The Fulflo® CP multi-cartridge filter vessels are designed for high efficiency and economical operation in oil reclamation and maintenance applications. The vessel features the integrity of a swing bolt for fast, easy opening and closing. It comes with standard zinc plated bolts and legs for corrosion resistance.

The light, compact design makes the Fulflo CP easy to mount on equipment or on the floor to conserve space. The adjustable legs offer installation flexibility by allowing various inlet elevations and nozzle orientations. Wall mounting brackets are available as well.

The CP filter vessel series replaces the FPM filter vessel series.

Contact Information

Parker Hannifin Corporation
Industrial Process Filtration - N.A.
118 Washington Avenue
Mineral Wells, TX 76067

phone +1 940 325 2575
industrialprocess.na@parker.com

www.parker.com/industrialprocess

Benefits

- Single O-ring design closure assures quick, positive cover sealing
- Swing bolts for fast, and easy opening and closing of cover
- Commercial engineering design - Non-code
- Pivot pin cover allows cover to remain attached when opened
- Adjustable leg height
- Optional mounting wall bracket (P/N 0820-6005)

Applications

- Hydraulic oils
- Quench Oils
- Engine & Compressor Lube Oils
- Cutting Oils
- Coolants
- EDM Liquids

ENGINEERING YOUR SUCCESS.

Fulflo® CP Multi-Cartridge Filter Vessel

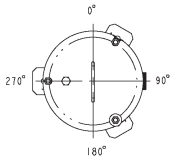

Material of Construction	Max. Allowable Pressure (MAP) (psi @ MAT °F)	Max. Allowable Temp. (MAT) (°F @ MAP psi)
Carbon Steel	175psi (12.1bar)	250°F (121°C)

†Operating temperature limited to 250°F by standard Buna-N O-ring material and exterior paint.

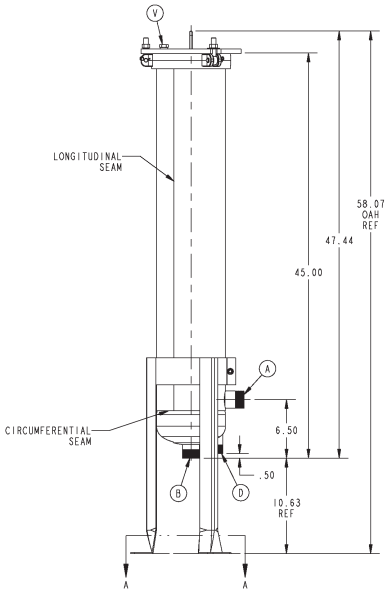

Cartridge Configurations

Filter Element	Series Number	Operating Temp.
Fulflo® Flo-Pac®	718, 736	250°F (121°C)
Fulflo® Flo-Pac® +		

Model	Number of 18″ Elements Per Column	Typical Aqueous Flow† (gpm)	OAH	Shipping Weight (lbs)
CPC1S1.5T	1	30	40.66	58
CPC1D1.5T	2	60	58.06	75

†Actual flow rate is dependent of fluid viscosity, micron rating, contaminant and media type. Consult flow charts for each application.

Ordering Information

CPC1 [ ] **1.5T†** [ ]

Elements (18″)	
Code	Quantity
S	1
D	2

Support Options	
Code	Description
Blank	Zinc plated carbon steel legs
W	Wall Mounted/No legs

†Male NPT

Example Part# Configuration for Orders (no dashes):
CPC1S1.5T
CPC1D1.5TW

Specifications are subject to change without notification.
For User Responsibility Statement, see www.parker.com/safety

© 2017 Parker-Hannifin Corporation
Industrial Process Filtration - North America
All Rights Reserved

Fulflo is a registered trademark of Parker-Hannifin Corporation
Viton is a registered trademark of E.I. DuPont de Nemours & Co., Inc.

Fulflo® EH Multi-Cartridge Filter Vessel

304 & 316 stainless steel, commercial design (non ASME code)

The Fulflo EH non-code multi-cartridge filter vessels provide economical filtration of a wide variety of liquids in a lightweight, externally polished stainless steel design, with features including a swing bolt secured, quick opening cover and an internal positive pressure cartridge alignment and sealing plate.

The EH vessels accommodate either 10", 20", 30" or 40" long, double open end (DOE) or 222 single open end (SOE) filter cartridges.

These vessels are manufactured from polished and passivated stainless steel and rated for 150 psi (10.3 bar).

For added corrosion resistance, all cover bolt and leg mounting hardware is made from stainless steel as well.

Contact Information

Parker Hannifin Corporation
Bioscience Division - N.A.
2340 Eastman Avenue
Oxnard, CA 93030

phone +1 805 604 3583
bioscience.na@parker.com

www.parker.com/bioscience

Benefits

- Convertible design allows for use of both DOE and SOE cartridges
- Swing bolted o-ring closure seal provides quick and positive seal and easy access to the vessel interior and filter cartridges
- Both FNPT threaded and flanged connections are available in specific models
- EPDM seals are standard with other material options available
- Standard threaded FNPT vent & drains
- Standard stainless steel cartridge support and sealing hardware
- Polished exterior and pickle passivate interior / exterior for enhanced corrosion resistance

Applications

- Potable Water
- Lubricants
- Process Water
- Coolants
- Edible Oils
- Cutting oils
- Coatings
- Solvents

ENGINEERING YOUR SUCCESS.

Fulflo® EH Multi-Cartridge Filter Vessel

Available Finishes

- Polished exterior

Typical aqueous flow (Based on 5gpm per 10" length)		
Model	**Filter Quantity**	**Capacity (gpm)**
EHG05S	5 x 10"	25
EHG05D	5 x 20"	50
EH*05T	5 x 30"	75
EH*05Q	5 x 40"	100
EHG07T	7 x 30"	105
EHG07Q	7 x 40"	140
EHG11T	11 x 30"	165
EHG11Q	11 x 40"	220
EHG19T	19 x 30"	285
EHG19Q	19 x 40"	380

* G or S

Vessel dimensions									
Model	**A**	**B**	**C**	**D**	**E**	**F**	**G**	**H**	**Weight (lbs)**
EHG05S2T	9.85	15.75	8.00	29.33	26.00	6.00	12.00	12.40	41
EHG05D2T	9.85	19.69	8.00	39.17	35.84	6.00	12.00	12.40	48
EH*05T2T	9.85	23.63	8.00	49.00	45.67	6.00	12.00	12.40	55
EH*05Q2T	9.85	27.56	8.00	59.25	55.91	6.00	12.00	12.40	62
EHG07T2T	11.81	27.56	10.00	51.77	47.64	7.00	14.00	14.57	75
EHG07Q2T	11.81	31.50	10.00	62.00	57.87	7.00	14.00	14.57	84
EHG11T3F	14.17	27.56	12.00	55.71	50.79	9.14	18.27	16.54	115
EHG11Q3F	14.17	35.43	12.00	65.16	60.24	9.14	18.27	16.54	123
EHG19T4F	15.75	31.50	15.91	58.47	52.56	11.90	23.79	20.87	161
EHG19Q4F	15.75	35.43	15.91	67.52	61.61	11.90	23.79	20.87	175

* G or S

Cartridge Configurations*	
222 O-ring SOE	Flat
	PP spring closed end
	Flex fin
	Fin
Gasket SOE	PP spring closed end
DOE	Standard

*2.75" maximum diameter

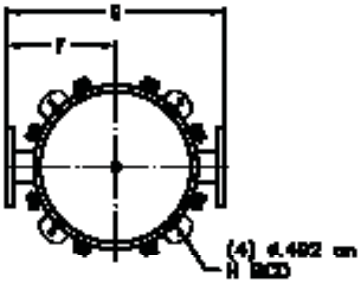

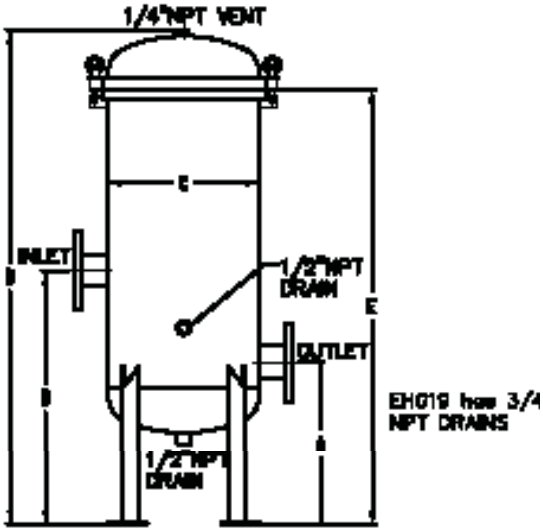

Material of Construction	Max. Allowable Pressure (MAP) (psi @ MAT °F)	Max. Allowable Temp. (MAT) (°F @ MAP psi)
304/316 SST	150 psi (10.3 bar)	300°F (149°C)

O-ring Temperature Guide	
Material	**Max. Temp.**
Nitrile (Buna-N)	250°F (121°C)
EPDM (EPR)*	300°F (149°C)
FKM (Viton®)	400°F (204°C)**

*EPDM o-ring is standard.
**Vessel temp. limited to 300°F (149°C)

Specifications are subject to change without notification.
For User Responsibility Statement, see www.parker.com/safety

© 2017 Parker-Hannifin Corporation
Bioscience Division - North America
All Rights Reserved

Fulflo® EH Multi-Cartridge Filter Vessel

Ordering Information

EH [ ] **05** [ ] [ ]

Material of Construction	
Code	Description
G	304 SS
S	316 SS

Cartridge Qty.
5

Element Length	
Size	Inches
S*	10
D*	20
T	30
Q	40

*Only avail. in 304SS

Inlet/Outlet Connection	
Code	Size
2T	2" NPT

EH [ ] **07** [ ] [ ]

Material of Construction	
Code	Description
G	304 SST

Cartridge Qty.
7

Element Length	
Size	Inches
T	30
Q	40

Inlet/Outlet Connection	
Code	Size
2T	2" NPT

EH [ ] **11** [ ] [ ]

Material of Construction	
Code	Description
G	304 SST

Cartridge Qty.
11

Element Length	
Size	Inches
T	30
Q	40

Inlet/Outlet Connection	
Code	Size
3F	3" Flange

EH [ ] **19** [ ] [ ]

Material of Construction	
Code	Description
G	304 SST

Cartridge Qty.
19

Element Length	
Size	Inches
T	30
Q	40

Inlet/Outlet Connection	
Code	Size
4F	4" Flange

Replacement Parts		
Model(s)	Part Number	Description
All	2390-5003	Cover Bolt Assembly†
All	2800-5405	Cartridge Guide (10") - 304SS
All	2800-5406	Cartridge Guide (20") - 304SS
All	2800-5403	Cartridge Guide (30") - 304SS
All	2800-5404	Cartridge Guide (40") - 304SS
All	5320-5402	Spring Seal Assembly
All	0720-5305	Center Rod 10" 304SS
All	0720-5306	Center Rod 20" 304SS
All	0720-5303	Center Rod 30" 304SS
All	0720-5304	Center Rod 40" 304SS
All	4090-5365	Wing Nut (Pressure Plate) - 304SS
All	6780-5190	Washer (Pressure Plate) - 304SS
EH*05	4150-5837-E	O-ring. Cover EPDM
EH*05	4150-5837-N	O-ring, Cover Buna-N
EH*05	4150-5837-V	O-ring, Cover FKM (Viton®)
EHG05	1567-0160	Pressure Plate - 304SS
EHS05	6780-5192	Washer (Pressure Plate) - 316SS
EHS05	5320-5408	Spring Seal Assembly - 316SS
EHS05	2800-5408	Cartridge Guide (30") - 316SS
EHS05	2800-5409	Cartridge Guide (40") - 316SS
EHS05	0720-5309	Center Rod 30" 316SS
EHS05	0720-5310	Center Rod 40" 316SS
EHS05	4090-5373	Wing Nut (Pressure Plate) - 316SS
EHS05	1567-0165	Pressure Plate - 316SS
EHG07	4150-5838-E	O-ring, Cover EPDM
EHG07	4150-5838-N	O-ring, Cover Buna-N
EHG07	4150-5838-V	O-ring, Cover FKM (Viton®)
EHG07	1567-0161	Pressure Plate - 304SS
EHG11	4150-5840-E	O-ring, Cover EPDM
EHG11	4150-5840-N	O-ring, Cover Buna-N
EHG11	4150-5840-V	O-ring, Cover FKM (Viton®)
EHG11	1567-0162	Pressure Plate - 304SS
EHG19	4150-5842-E	O-ring, Cover EPDM
EHG19	4150-5842-N	O-ring, Cover Buna-N
EHG19	4150-5842-V	O-ring, Cover FKM (Viton®)
EHG19	1567-0163	Pressure Plate - 304SS

†Bolt assembly includes 1 each bolt, nut, washer, pin and retainer.

Specifications are subject to change without notification.
For User Responsibility Statement, see www.parker.com/safety

© 2017 Parker-Hannifin Corporation
Bioscience Division - North America
All Rights Reserved
Fulflo is a registered trademark of Parker-Hannifin Corporation
Viton is a registered trademark of E.I. DuPont de Nemours & Co., Inc.

DS_IP_E Multi Filter Vessel 2/14 Rev. D

This page is intentionally blank.

Fulflo® FE Filter Vessel

ASME code designed for economical filtration of liquids and gases

Fulflo FE multi-cartridge filter vessels meet a broad range of liquid and gas applications. It comes with standard zinc plated bolts and legs for corrosion resistance but is also offered with stainless steel options. Wall mounting brackets are available as well.

The FE filter vessels accommodate double-open-end (DOE) and single-open-end (SOE) filter cartridges in 10 inch, 20 inch, and 30 inch lengths.

Contact Information

Parker Hannifin Corporation
Industrial Process Filtration - N.A.
118 Washington Avenue
Mineral Wells, TX 76067

phone +1 940 325 2575
industrialprocess.na@parker.com

www.parker.com/industrialprocess

Benefits

- Single O-ring design closure assures quick, positive cover sealing
- Swing bolts with eyenuts for fast, easy opening and closing of cover
- Dual purpose cartridge seats for use with DOE and 2-222 O-ring SOE cartridges
- ASME Code UM stamp is standard (U stamp is optional)
- Threaded vent & drain connections
- Adjustable leg height
- Threaded or flanged inlet and outlet
- Side inlet; cover opens without disconnecting piping
- Side inlet, bottom outlet and crevice-free welded design provide a smooth interior for easy wash-out and cleaning

Applications

- Potable Water
- Process Water
- Coatings
- Lubricants
- Coolants
- Cutting Oils
- Solvents

ENGINEERING YOUR SUCCESS.

Fulflo® FE Filter Vessel

Design Specifications

Model	Cartridge No. & Length (in)	Aqueous Flow† (gpm)	Typical Dimensions (in)					Shipping Wt. (lbs)	Volume (gal)
			A	B	C	D	E††		
FE6-1-2	6 (10)	30	33.00	5.75	25.56	13.19	2 NPT	82	3.6
FE6-1-2F	6 (10)	30	33.00	8.00	25.56	12.00	2 NPS	90	3.6
FE6-2-2	6 (20)	60	43.06	5.75	35.63	13.19	2 NPT	87	5.4
FE6-2-2F	6 (20)	60	43.06	8.00	35.63	12.00	2 NPS	95	5.4
FE6-3-2	6 (30)	90	53.13	5.75	45.69	13.19	2 NPT	92	7.8
FE6-3-2F	6 (30)	90	53.13	8.00	45.69	12.00	2 NPS	100	7.8
FE6-3-3F	6 (30)	90	53.13	8.00	45.69	11.75	3 NPS	110	7.8

† Actual rate is dependent on fluid viscosity, micron rating, contaminant and media type. Consult flow charts for each application.
†† NPT - ANSI Class 3000# Thread Couplings / NPS - ANSI Class 150# Slip-on Flanges

Maximum Operating Conditions

Material of Construction	Max. Allowable Pressure (MAP) (psi @ MAT ºF)	Max. Allowable Temp. (MAT) (ºF @ MAP psi)
Carbon Steel	150psi (10.3bar)	450ºF (232ºC)* **
304L Stainless	150psi (10.3bar)	450ºF (232ºC)**
316L Stainless	150psi (10.3bar)	450ºF (232ºC)**

*Limited to 250ºF by the paint

**Limited to 250ºF by the standard Buna-N O-ring

Optional Shell O-Ring/Gasket*	
Material	Part #
Nitrile/Buna-N (Std.)	4151-1371
EPDM	4154-5371
Silicone	4150-5537
FKM (Viton®)	4152-8371
Fluoropolymer	4151-5371

*Optional O-ring shipped separately

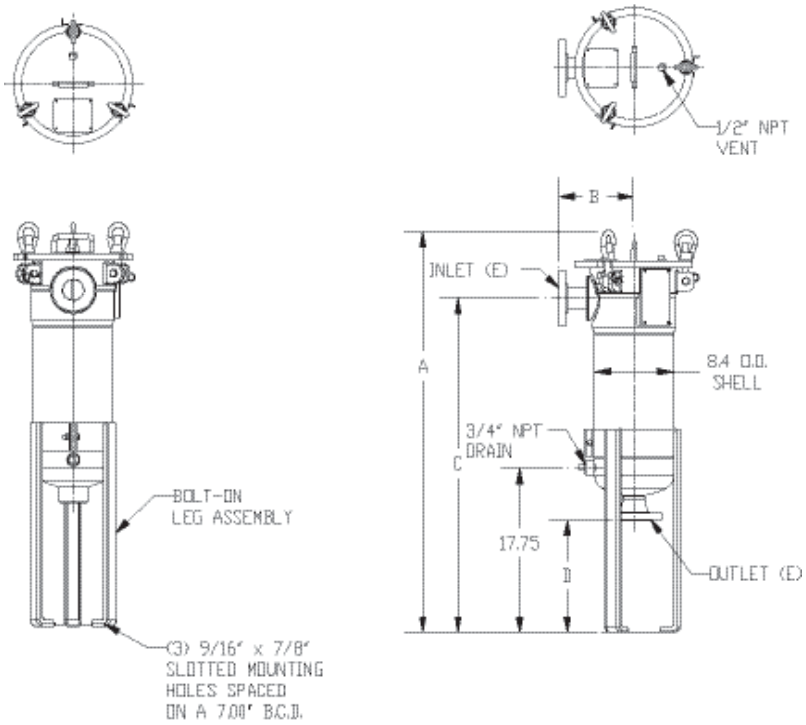

Ordering Information

FE [ ] 6 — [ ] — [ ] [ ] — [ ]

Material of Construction	
Code	Description
None	Carbon Steel
4L	304L Stainless Steel
6L	316L Stainless Steel

Cartridge Qty.	
Code	Amount
6	6

Cartridge Length	
Code	Inches
1	10
2	20
3	30

Connection Size	
Code	Inches
2	2
3	3

Connection Type	
Code	Description
Blank	NPT
F	ANSI 150 lb. flange

Support Options	
Code	Description
Blank	Zinc plated carbon steel legs
SL	304 Stainless steel legs
SB	316 Stainless steel cover bolts
SS	Stainless steel bolts & legs

Specifications are subject to change without notification.
For User Responsibility Statement, see www.parker.com/safety

© 2017 Parker-Hannifin Corporation
Industrial Process Filtration - North America
All Rights Reserved

Fulflo is a registered trademark of Parker-Hannifin Corporation
Viton is a registered trademark of E.I. DuPont de Nemours & Co., Inc.

DS_IP_FE Vessel Rev. B

Fulflo® FP Filter Vessel

ASME code design for economical liquid filtration

Fulflo® FP single or double round filter vessels meet a broad range of liquid applications. It is designed for use with the Fulflo® Flo-Pac 718 and 736 pleated filter cartridge series.

Contact Information

Parker Hannifin Corporation
Industrial Process Filtration - N.A.
118 Washington Avenue
Mineral Wells, TX 76067

phone +1 940 325 2575
industrialprocess.na@parker.com

www.parker.com/industrialprocess

Benefits

- Single O-ring design closure assures quick, positive cover sealing
- Swing bolts with eyenuts for fast, easy opening and closing of cover
- ASME Code UM stamp is standard (U stamp is optional)
- Threaded vent & drain connections
- Adjustable leg height
- Threaded or flanged inlet and outlet options
- Side inlet, bottom outlet and crevice-free welded design provide a smooth interior for easy wash-out and cleaning

Applications

- Process Water
- Coatings
- Lubricants
- Coolants
- Cutting Oils
- Solvents
- EDM

ENGINEERING YOUR SUCCESS.

Fulflo® FP Filter Vessel

Design Specifications

Model	Cartridge No. & Length (in.)	Typical Aqueous Flow† (gpm)	Dimensions (in.)					Shipping Weight (lbs)	Volume (gal)
			A	B	C	D	E††		
FP1-1-2	(1) 18	50	42.56	5.75	35.13	13.19	2 NPT	112	5.5
FP1-1-2F	(1) 18	50	42.56	8.00	35.13	12.00	2 NPS	120	5.5
FP1-2-2	(2) 18	100	60.56	5.75	53.13	13.19	2 NPT	132	9.6
FP1-2-2F	(2) 18	100	60.56	8.00	53.13	12.00	2 NPS	140	9.6
FP1-2-3F	(2) 18	100	60.56	8.00	53.13	11.75	2 NPS	150	9.6

†Actual rate is dependent on fluid viscosity, micron rating, contaminant and media type. Consult flow charts for each application.
†† NPT - ANSI Class 3000# Thread Couplings / NPS - ANSI Class 150# Slip-on Flanges

Maximum Operating Conditions

Material of Construction	Max. Allowable Pressure (MAP) (psi @ MAT ºF)	Max. Allowable Temp. (MAT) (ºF @ MAP psi)
Carbon Steel	150psi (10.3bar)	450ºF (232ºC)* **
304L Stainless	150psi (10.3bar)	450ºF (232ºC)**

*Limited to 250ºF by the paint

**Limited to 250ºF by the standard Buna-N O-ring

Optional Shell O-Ring/Gasket*	
Material	Part #
Nitrile/Buna-N (Std.)	4151-1371
EPDM	4154-5371
FKM (Viton®)	4152-8371
Fluoropolymer	4151-5371

*Optional O-ring shipped separately

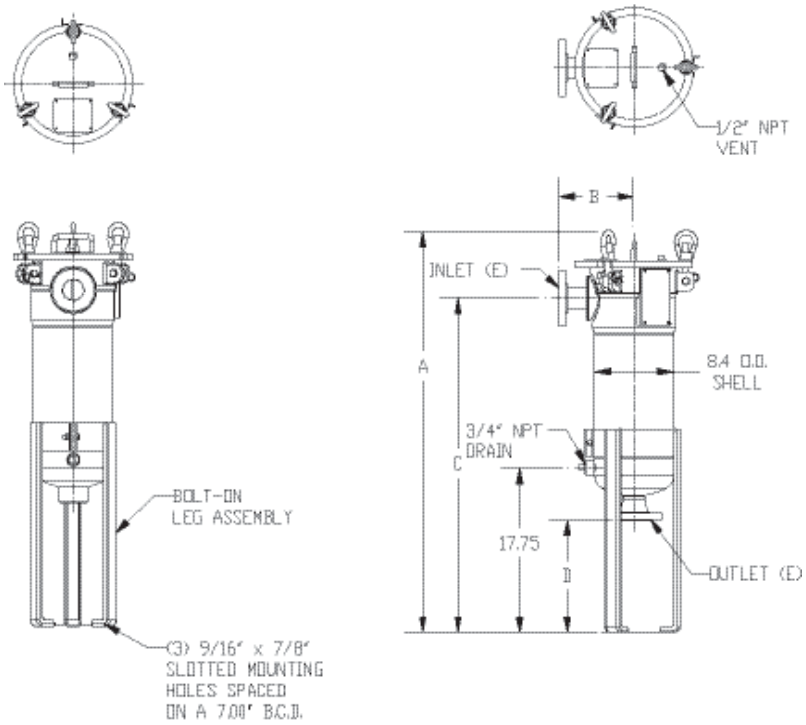

Ordering Information

FP [ ] 1 — [ ] — [ ] [ ]

Material of Construction	
Code	Description
None	Carbon Steel
4L	304L Stainless Steel

Cartridge Qty.	
Code	Columns
1	1

Cartridge Length	
Code	Inches
1	18
2	36

Connection Size	
Code	Inches
2	2
3	3

Connection Type	
Code	Description
Blank	NPT
F	ANSI 150 lb. flange

Specifications are subject to change without notification.
For User Responsibility Statement, see www.parker.com/safety

© 2017 Parker-Hannifin Corporation
Industrial Process Filtration - North America
All Rights Reserved

Fulflo is a registered trademark of Parker-Hannifin Corporation
Viton is a registered trademark of E.I. DuPont de Nemours & Co., Inc.

Fulflo® HT Multi-Cartridge Filter Vessel

ASME code filter vessel for heat transfer oils and other high temperature fluids

Fulflo® HT multi-cartridge filter vessels are specifically designed for filtration of high temperature heat transfer oils and other hot fluids. All details of design, materials and construction of the HT vessel series conform to ASME code.

The HT series vessels are designed for use with double open end (DOE) and single open end (SOE) cartridges in 10, 20 and 30 inch lengths.

Benefits

- ANSI blind flange closure for positive seal and common replacement gasket size
- High temperature 304 SS spiral wound closure gasket with non-asbestos filler for use at elevated temperature and when fire safe non O-ring design is required
- Modified silicone paint, suitable for high temperature, applied over sandblasted surface for exterior protection

Contact Information

Parker Hannifin Corporation
Industrial Process Filtration - N.A.
118 Washington Avenue
Mineral Wells, TX 76067

phone +1 940 325 2575
industrialprocess.na@parker.com

www.parker.com/industrialprocess

Benefits (cont'd)

- Nickel plated bolting for corrosion resistance at high temperature
- Cartridge top seats, guides and bottom seats made of 316 SS for corrosion resistance
- Inlet and outlet nozzles extended 6 inches to allow for installation of protective insulation
- Extruded nameplate so design information is visible after protective insulation is installed
- Minimum pressure drop design
- Designed & fabricated in accordance with ASME Boiler & Pressure Vessel code, U or UM stamp
- Dual purpose cartridge seat for use with double open end and 2-222 O-ring single open end cartridges

Applications

- Heat Transfer Oils
- High Temperature Oils
- Hot Fluids & Gases

ENGINEERING YOUR SUCCESS.

Fulflo® HT Filter Vessels

Design Specifications

Model	Cart. Qty. & Length (in.)	Flow†	A	B	Shipping Weight (lbs)	
					150 U | UM	300 U | UM
HT6-1-2F	6 (10)	30	32.38	28.63	175	260
HT6-2-2F	6 (20)	60	42.44	38.69	190	275
HT6-3-2F	6 (30)	90	52.50	48.75	205	290

†Based on 5 gpm per 10" cartridge

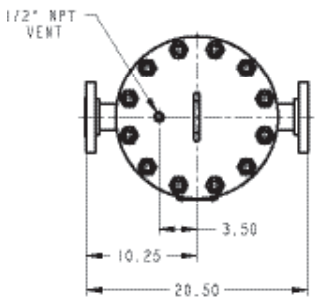

Maximum Operating Conditions

Code	Material of Construction	Max. Operating Pressure	Max. Operating Temperature
150 U, UM	Carbon Steel	122psi (8.41bar)	650°F (343°C)
300 U, UM	Carbon Steel	417psi (28.7bar)	650°F (343°C)

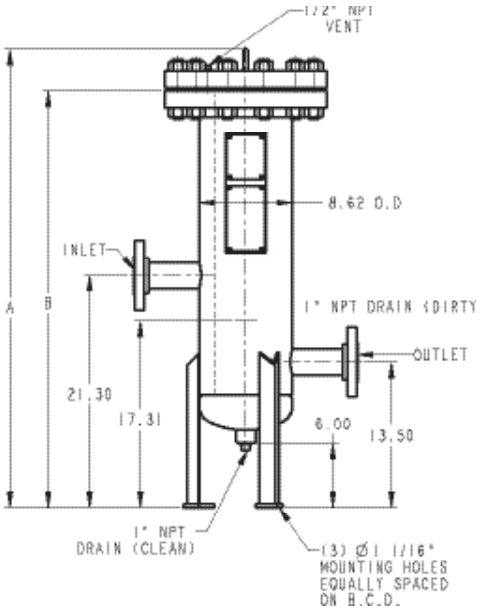

Ordering Information

HT **6** — [ ] — **2F** — [ ]

Design Series
High Temperature

Cartridge Qty.
6

Cartridge Length	
Code	Inches
1	10
2	20
3	30

Inlet | Outlet Flange Size	
Code	Inches
2F	2

Code Stamp
Option
UM150
UM300
U150
U300

Specifications are subject to change without notification.
For User Responsibility Statement, see www.parker.com/safety

© 2017 Parker-Hannifin Corporation
Industrial Process Filtration - North America
All Rights Reserved

Fulflo is a registered trademark of Parker-Hannifin Corporation

Fulflo® MegaFlow™ Multi-Cartridge Filter Vessel

ASME code. high flow capacity design for MegaFlow filter cartridges

Fulflo® MegaFlow™ vessels are designed to accept MegaFlow filter cartridges that handle up to 175gpm (662 lpm) each. They provide significant size and capital cost reduction compared with vessels containing conventional size filter cartridges. The horizontal design and coreless cartridge configuration make change-out fast and easy.

Models are available for flow rates up to 3325gpm (12,586 lpm).

Contact Information

Parker Hannifin Corporation
Industrial Process Filtration - N.A.
118 Washington Avenue
Mineral Wells, TX 76067

phone +1 940 325 2575
industrialprocess.na@parker.com

www.parker.com/industrialprocess

Benefits

- Horizontal design makes cartridge change practically effortless
- Vessels have slight pitch to prevent liquid from spilling when opening cover
- Permanent internal perforated post supports cartridges and eliminates loose internal parts
- Cartridges have internal O-ring for positive seal
- Cartridge top is located flush with cover to facilitate cartridge change
- Inlet connection is below cartridges to prevent impingement on media
- Built to ASME Boiler And Pressure Code to insure integrity
- Available in carbon steel, 304L stainless steel and 316L stainless steel for a wide variety of applications
- O-ring cover seal for quick and positive vessel cover sealing
- Cover locating pin for quick and accurate alignment
- Available in 150psi and 300psi pressure ratings

Applications

- Reverse Osmosis Filtration
- Potable Water
- Process Water
- Edible Oils
- Lubricants
- Coolants
- Cutting Oils
- Solvents
- Chemicals

ENGINEERING YOUR SUCCESS.

Fulflo® MegaFlow™ Filter Vessel

Maximum Operating Conditions

Material of Construction	Max. Operating Pressure (psi @ 250 °F)†	Max. Design Temp.††	Connection type
Carbon Steel	150psi (10.3bar)	250°F (121°C)	F
Carbon Steel	300psi (20.7bar)	250°F (121°C)	H
304 Stainless Steel	150psi (10.3bar)	250°F (121°C)	F
304 Stainless Steel	300psi (20.7bar)	250°F (121°C)	H
316 Stainless Steel	150psi (10.3bar)	250°F (121°C)	F
316 Stainless Steel	300psi (20.7bar)	250°F (121°C)	H

† Operating temperature limited by standard O-ring material and exterior paint.

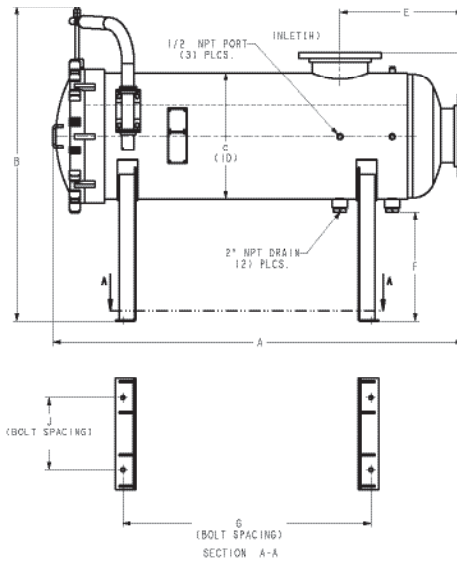

Optional Shell O-Ring/Gasket*				
Model	Part #			
	Buna-N	EPDM	FKM Viton®	Fluoropolymer encapsulated Viton®
2 round	4150-5155	-	-	-
3 round	4151-5365	-	4150-5319	-
4 round	4151-1467	4154-5467	4152-8467	-
5 round	4151-1470	4154-5470	4152-8470	-
7 round	4151-1472	4154-5472	4152-8472	-
8 round	4154-1474	4154-5474	4152-8474	-
12 round	4150-5441	4150-5444	4150-5422	-
15 round	4150-5399	4150-5225	-	-
19 round	4150-5367	-	-	4150-5577

*Optional O-ring shipped separately

Reference Dimensions

No. & Model	Cartridges	Horizontal Model Dimensions (in.)									Shipping Weight (lbs.)
	Qty.	A	B	C	D	E	F	G	H	J	
MF02	2	69.31	57.44	14.063	11.25	20.00	27.09	46.00	6 NPS	8.00	615
MF03	3	69.81	58.44	16.063	12.25	21.00	26.09	46.00	6 NPS	8.00	715
MF04	4	75.20	58.00	18.063	13.25	22.00	25.09	48.00	8 NPS	10.00	790
MF05	5	75.47	59.00	20.063	14.25	22.00	24.09	48.00	8 NPS	12.00	920
MF07	7	78.73	60.00	22.063	15.25	24.00	23.09	48.00	10 NPS	12.00	1120
MF08	8	79.00	61.00	24.063	16.25	24.00	22.09	48.00	10 NPS	14.00	1245
MF12	12	85.93	64.06	30.063	20.25	28.00	19.03	52.00	12 NPS	20.00	1915
MF15	15	92.95	65.06	32.063	21.50	30.00	18.03	54.00	14 NPS	22.00	2175
MF19	19	95.32	73.31	36.063	23.75	34.00	22.03	56.00	16 NPS	26.00	2870

Actual flow rate is dependent on fluid viscosity, micron rating, contaminant, media type and inlet viscosity. Consult media flow charts for each application.
Shipping weights and dimensions are for 150 psig nominal design only.

Ordering Information

MF [ ] [ ] [ ] [ ] [ ] [ ] [ ]

Material of Construction	
Code	Description
C	Carbon Steel
G	304L Stainless Steel
S	316L Stainless Steel

Design Series	
Code	Description
N	Non-code
U	ASME Code

Cartridge Qty.	
Code	Amount
01	1
02	2
03	3
04	4
05	5
07	7
08	8
12	12
15	15
19	19

Vessel Orientation	
Code	Description
V	Vertical
H	Horizontal

Inlet | Outlet Size	
Code	Inches
06	6
08	8
10	10
12	12
14	14
16	16

Inlet | Outlet Connection Type	
Code	Description
F	ANSI 150 lb. flange
H	ANSI 300 lb. flange

Finish	
Code	Description
C	Painted
B	Glass bead blast
P	Passivated
E	Electropolished

Specifications are subject to change without notification.
For User Responsibility Statement, see www.parker.com/safety

© 2017 Parker-Hannifin Corporation
Industrial Process Filtration - North America
All Rights Reserved

Fulflo is a registered trademark of Parker-Hannifin Corporation
Viton is a registered trademark of E.I. DuPont de Nemours & Co., Inc.

Fulflo® MP Filter Vessel

ASME code R.O. pre-filter membrane protector (MP) filter vessel

MP filter vessels are ideal for a wide range of filtration applications including pre-filtration of brackish, process and sea water. All MP Series vessels are built in accordance with ASME boiler and Pressure Vessel Code, U stamp. All MP vessels have dual purpose bottom seats for use with either double-open-end or 222 O-ring design.

Contact Information

Parker Hannifin Corporation
Industrial Process Filtration - N.A.
118 Washington Avenue
Mineral Wells, TX 76067

phone +1 940 325 2575
industrialprocess.na@parker.com

www.parker.com/industrialprocess

Benefits

- Flow rates from 108gpm to 3520gpm
- Maximum design pressure is 150psi (10.3bar) at 250°F (121°C)
- 304L or 316L stainless steel
- Stainless steel welded attachments
- Swing bolt closure for quick opening, with hex nuts for use with pneumatic tools
- Optional stainless steel bolting and davit assembly
- Horizontal vessels provide for easy cartridge installation
- Dual purpose cartridge seats for use with double open end and 2-222 O-ring single-open-end cartridges
- Glassbead blasted exteriors
- Passivated interior and exterior surfaces to remove free carbon and protect against corrosion
- Buna-N O-ring closure seal provides positive cover sealing
- Horizontal vessel utilizes removable internal cartridge support plate
- Large size clean and dirty drain for uniform piping and valve size

Applications

- Brackish and Sea Water
- Semiconductor Process Water
- Boiler Feed Water
- Reverse Osmosis Pre-filtering
- Potable Water
- Electronic Rinse Water
- Deionized Water

ENGINEERING YOUR SUCCESS.

Fulflo® MP Filter Vessel

Fulflo® MP Filter Series throughput based on flow of water (in gpm) per 10-inch cartridge

10 inch Cartridges	Filter Model	At 3gpm† per 10 inch		At 3.5gpm per 10 inch		At 4.5gpm per 10 inch		At 5gpm per 10 inch	
		gpm‡	mgd	gpm	mgd	gpm	mgd	gpm	mgd
VERTICAL VESSELS									
36	MP12-3-3FK1	108	0.2	126	0.2	162	0.2	180	0.3
48	MP12-4-4FK1	144	0.2	168	0.3	216	0.3	240	0.3
63	MP21-3-4FK1	189	0.3	221	0.4	284	0.4	315	0.5
84	MP21-4-4FK1	252	0.4	294	0.5	378	0.5	420	0.6
87	MP29-3-4FK1	261	0.4	305	0.5	392	0.6	435	0.6
105	MP35-3-6FK1	315	0.5	368	0.6	473	0.7	525	0.8
116	MP29-4-6FK1	348	0.5	406	0.7	522	0.8	580	0.8
120	MP40-3-6FK1	360	0.5	420	0.7	540	0.8	600	0.9
140	MP35-4-6FK1	420	0.6	490	0.8	630	0.9	700	1.0
156	MP52-3-6FK1	468	0.7	546	0.9	702	1.0	780	1.1
160	MP40-4-6FK1	480	0.7	560	0.9	720	1.0	800	1.2
208	MP52-4-8FK1	624	0.9	728	1.2	936	1.3	1040	1.5
258	MP86-3-8FK1	774	1.1	903	1.5	1161	1.7	1290	1.9
309	MP103-3-8FK1	927	1.3	1082	1.8	1391	2.0	1545	2.2
344	MP86-4-10FK1	1032	1.5	1204	2.0	1548	2.2	1720	2.5
412	MP103-4-10FK1	1236	1.8	1442	2.4	1854	2.7	2060	3.0
472	MP118-4-12FK1	1416	2.0	1652	2.7	2124	3.1	2360	3.4
704	MP177-4-14FK1	2115	3.0	2464	4.1	3168	4.6	3520	5.1
HORIZONTAL VESSELS									
120	MP40H-3-6FK1	360	0.5	420	0.7	540	0.8	600	0.9
156	MP52H-3-6FK1	468	0.7	546	0.9	702	1.0	780	1.1
160	MP40H-4-6FK1	480	0.7	560	0.9	720	1.0	800	1.2
208	MP52H-4-8FK1	624	0.9	728	1.2	936	1.3	1040	1.5
258	MP86H-3-8FK1	774	1.1	903	1.5	1161	1.7	1290	1.9
309	MP103H-3-8FK1	927	1.3	1082	1.8	1391	2.0	1545	2.2
344	MP86H-4-10FK1	1032	1.5	1204	2.0	1548	2.2	1720	2.5
412	MP103H-4-10FK1	1236	1.8	1442	2.4	1854	2.7	2060	3.0
472	MP118H-4-12FK1	1416	2.0	1652	2.7	2124	3.1	2360	3.4
704	MP177H-4-14FK1	2112	3.0	2464	4.1	3168	4.6	3520	5.1

† Actual flow rate is dependent on fluid viscosity, micron rating, contaminant and media type. Consult flow charts for each application.
‡ gpm =gallons per minute; mgd = millions of gallons per day

Optional Shell O-Ring/Gasket* refer to price book for details.

Specifications are subject to change without notification.
For User Responsibility Statement, see www.parker.com/safety

© 2017 Parker-Hannifin Corporation
Industrial Process Filtration - North America
All Rights Reserved

Fulflo® MP Filter Vessel

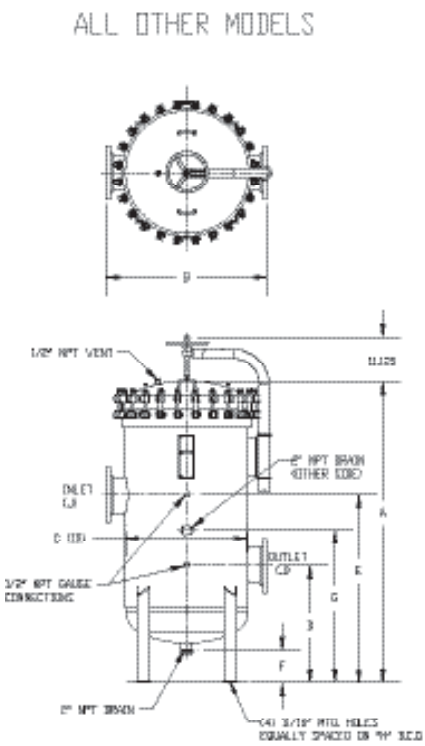

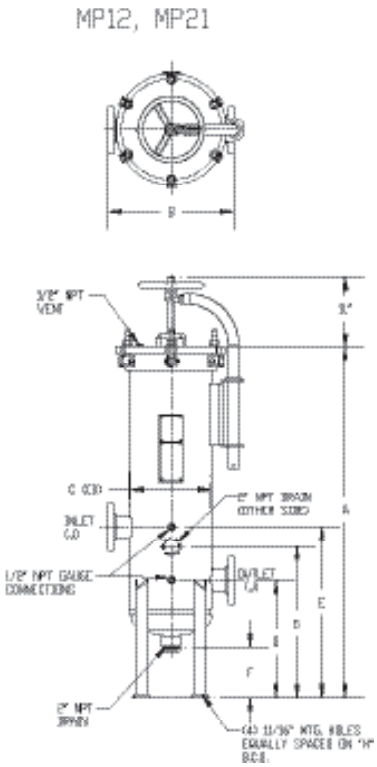

Design Specifications

No. & Model	Cartridges		Dimensions (in.)									Shipping Weight (lbs.)
	Qty.	Length (in.)	A	B	C	D	E	F	G	H	J	
MP12-3-3FK1	12	30	67.75	20.00	12.813	18.50	27.00	8.00	23.75	12.50	3 NPS	390
MP12-4-4FK1	12	40	77.75	20.00	12.813	18.50	27.00	8.00	23.75	12.50	4 NPS	420
MP21-3-4FK1	21	30	68.75	24.00	16.063	19.25	27.75	8.00	24.50	15.75	4 NPS	500
MP21-4-4FK1	21	40	78.75	24.00	16.063	19.25	27.75	8.00	24.50	15.75	4 NPS	530
MP29-3-4FK1	29	30	75.25	26.00	18.063	22.00	33.25	8.00	28.25	17.88	4 NPS	570
MP29-4-6FK1	29	40	85.25	26.00	18.063	22.00	33.25	8.00	28.25	17.88	6 NPS	620
MP35-3-6FK1	35	30	76.00	28.00	20.063	22.50	34.00	8.00	28.75	19.88	6 NPS	650
MP35-4-6FK1	35	40	86.00	28.00	20.063	22.50	34.00	8.00	28.75	19.88	6 NPS	680
MP40-3-6FK1	40	30	77.00	30.00	22.063	23.00	34.25	8.00	29.25	21.88	6 NPS	710
MP40-4-6FK1	40	40	87.00	30.00	22.063	23.00	34.25	8.00	29.25	21.88	6 NPS	750
MP52-3-6FK1	52	30	80.75	32.00	24.063	25.50	40.00	8.00	32.75	23.75	6 NPS	790
MP52-4-8FK1	52	40	90.75	32.00	24.063	25.50	40.00	8.00	32.75	23.75	8 NPS	860
MP86-3-8FK2	86	30	86.75	40.00	30.063	29.00	46.50	8.00	37.75	30.00	8 NPS	1280
MP86-4-10FK2	86	40	96.75	40.00	30.063	29.00	46.50	8.00	37.75	30.00	10 NPS	1380
MP103-3-8FK2	103	30	87.75	42.00	32.063	29.50	47.00	8.00	38.25	32.00	8 NPS	1410
MP103-4-10FK2	103	40	97.75	42.00	32.063	29.50	47.00	8.00	38.25	32.00	10 NPS	1510
MP118-4-12FK2	118	40	102.00	46.00	36.063	32.50	52.25	8.00	42.00	35.88	12 NPS	1830
MP177-4-14FK2	176	40	107.00	54.00	42.063	35.00	57.00	8.00	45.50	42.00	14 NPS	2650

Specifications are subject to change without notification.
For User Responsibility Statement, see www.parker.com/safety

© 2017 Parker-Hannifin Corporation
Industrial Process Filtration - North America
All Rights Reserved

Fulflo® MP Filter Vessel

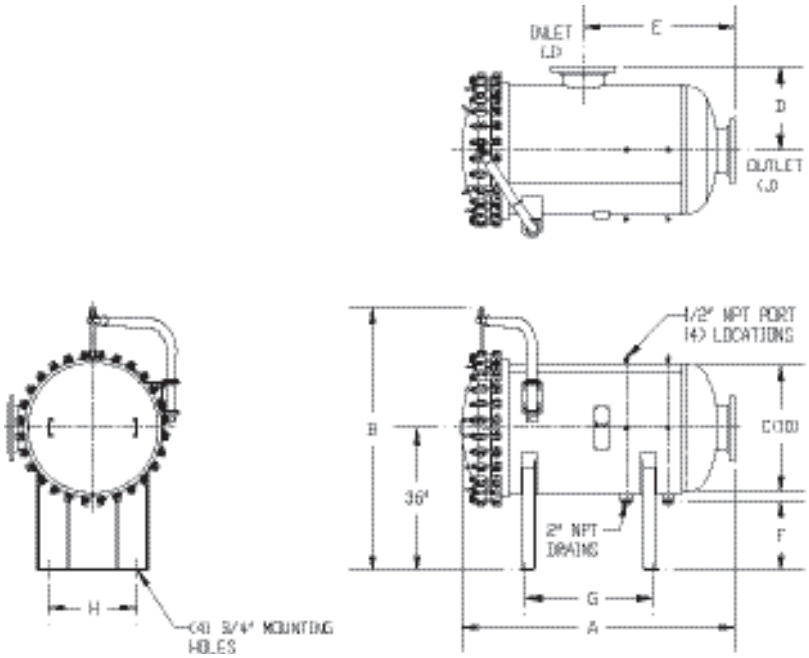

Design Specifications

No. & Model	Cartridges		Dimensions (in.)									Shipping Weight (lbs.)
	Qty.	Length (in.)	A	B	C	D	E	F	G	H	J	
MP40H-3-6FK1	40	30	55.50	60.0	22.063	15.00	32.00	23.00	23.00	12.00	6 NPS	850
MP40H-4-6FK1	40	40	65.50	60.0	22.063	15.00	36.00	23.00	32.00	12.00	6 NPS	880
MP52H-3-6FK1	52	30	55.25	61.0	24.063	16.00	32.00	22.00	23.00	14.00	6 NPS	920
MP52H-4-8FK1	52	40	65.25	61.0	24.063	16.00	36.00	22.00	32.00	14.00	8 NPS	990
MP86H-3-8FK1	86	30	60.25	64.0	30.063	20.00	34.00	19.00	24.00	20.00	8 NPS	1490
MP86H-4-10FK1	86	40	68.25	64.0	30.063	20.00	38.00	19.00	32.00	20.00	10 NPS	1560
MP103H-3-8FK1	103	30	60.75	66.0	32.063	21.00	34.00	18.00	24.00	22.00	8 NPS	1620
MP103H-4-10FK1	103	40	68.75	66.0	32.063	21.00	38.00	18.00	32.00	22.00	10 NPS	1700
MP118H-4-12FK1	118	40	72.00	67.0	36.063	23.00	40.00	16.00	32.00	26.00	12 NPS	2040
MP177H-4-14FK1	176	40	74.75	77.6	42.063	27.00	41.00	13.00	32.00	32.00	14 NPS	2820

Ordering Information

[ ] MP [ ] [ ] — [ ] — [ ] [ ]

Material of Construction	
Code	Description
4L	304 LSS
6L	316L SS

Cartridge Qty.	
Orientation	Range
Vertical	12-176
Horizontal	40-176

Design Series	
Code	Description
Blank	Vertical
H	Horizontal

Cartridge Length	
Code	Inches
3	30
4	40

Inlet | Outlet Flange Options
Code
3F
4F
6F
8F
10F
12F
14F

Coverlift Option	
Code	Description
No symbol	None
K1	Mechanical
K2	Hydraulic

Specifications are subject to change without notification.
For User Responsibility Statement, see www.parker.com/safety

© 2017 Parker-Hannifin Corporation
Industrial Process Filtration - North America
All Rights Reserved

Fulflo is a registered trademark of Parker-Hannifin Corporation
Viton is a registered trademark of E.I. DuPont de Nemours & Co., Inc.

DS_IP_MP Vessel Rev. B

Fulflo® P Filter Vessel

ASME code high efficiency and high flow rate vessel

Fulflo® P series multi-cartridge filter vessels are designed for high flow rate where the contaminants can be effectively removed by pleated paper (surface type) media.

The P vessel series is designed for use with the Fulflo® Flo-Pac® 718 and 736 pleated filter cartridge series.

Contact Information

Parker Hannifin Corporation
Industrial Process Filtration - N.A.
118 Washington Avenue
Mineral Wells, TX 76067

phone +1 940 325 2575
industrialprocess.na@parker.com

www.parker.com/industrialprocess

Benefits

- Designed and fabricated in accordance with the ASME Boiler and Pressure Vessel Code, U or UM stamp with 150psi (10.3bar) rating at 250°F (121°C)
- Mechanical coverlifts
- Designed for minimum pressure drop
- Cartridge capacity from 1 to 18 cartridges
- All P models feature swing bolts for easier cleaning and servicing
- O-ring seals provide positive closure sealing
- Optional hydraulic coverlifts

Applications

- Fuels
- Lubricating Oils
- Solvents
- Coolants
- Refineries
- Hydraulic Oils
- Rolling Mill Oils
- Processing Liquids

ENGINEERING YOUR SUCCESS.

Fulflo® P Filter Vessel

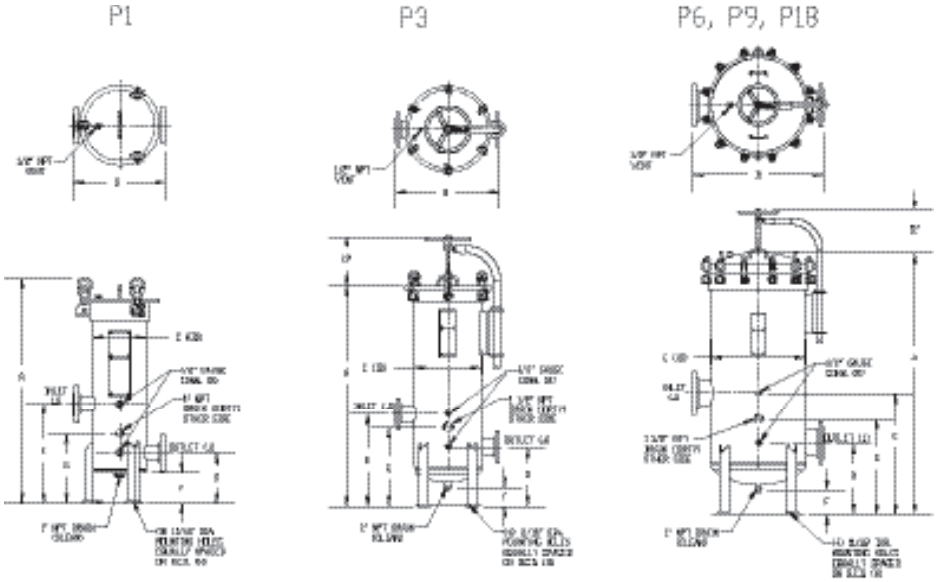

Reference Dimensions

Model	Cartridge No. & Length (in.)	Maximum Flow† (gpm)	Dimensions (in.)									Shipping Weight†† (lbs.)
			A	B	C	D	E	F	G	H	J	
P1-1-2F	1 (18)	50	36.13	14.88	8.63	8.19	16.19	5.06	11.31	7.81	2	180
P1-2-2F	1 (36)	100	54.13	14.88	8.63	8.19	16.19	5.06	11.31	7.81	2	200
P3-1-3F	3 (18)	150	38.74	22.50	15.06	13.38	21.00	5.00	17.88	14.75	3	405
P3-2-3F	3 (36)	300	57.31	22.50	15.06	13.38	21.00	5.00	17.88	14.75	3	465
P6-2-6F	6 (36)	600	65.00	29.25	20.06	16.50	31.00	5.00	22.56	19.75	6	790
P9-2-6F	6 (36)	900	67.19	33.38	24.06	18.00	31.00	6.00	24.19	23.75	6	985
P18-2-8F	18 (36)	1800	76.06	42.25	32.06	23.63	41.25	6.00	31.69	31.81	8	1570

† Actual flow rate is dependent on fluid viscosity, micron rating, contaminant and media type. Consult flow charts for each application.
†† Shipping weights and dimensions are for 150psig nominal design only.

Material of Construction	Max. Allowable Pressure (psi @ 250ºF)*	Max. Allowable Temperature
Carbon Steel	150psi (10.3bar)	250° F (121° C)

*Operating temperature limited to 250º F by standard Buna-N O-ring material and exterior paint.

Ordering Information

P [ ] [ ] [ ] [ ]

Cartridge Qty.	
Code	Columns
1	1
3	3
6	6
9	9
18	18

Cartridge Length	
Code	Inches
1	18
2	36

Inlet | Outlet Flange Size	
Code	Description
2F	2 inch flange
3F	3 inch flange
6F	6 inch flange
8F	8 inch flange

Coverlift Option	
Code	Description
K1	Mechanical
K2	Hydraulic

Specifications are subject to change without notification.
For User Responsibility Statement, see www.parker.com/safety

© 2017 Parker-Hannifin Corporation
Industrial Process Filtration - North America
All Rights Reserved

Fulflo is a registered trademark of Parker-Hannifin Corporation
Viton is a registered trademark of E.I. DuPont de Nemours & Co., Inc.

DS_IP_P Vessel Rev. B

ParMax™ Multi-Cartridge Filter Vessel

ASME code, high-flow capacity vessel

ParMax™ multi-cartridge filter vessels are designed to accept ParMax filter cartridges for flows of up to 500 gpm (1892 lpm) each 60″ length. They provide significant size and capital cost reduction compared with vessels containing conventional size filter cartridges. The horizontal design and coreless cartridge configuration make cartridge change fast and easy. ParMax filter elements are inside/out flow direction and are available in either 20″, 40″ or 60″ length. Actual flow rate is dependent on fluid viscosity, micron rating, contaminant, media type and inlet velocity. Consult ParMax cartridge flow charts for each application.

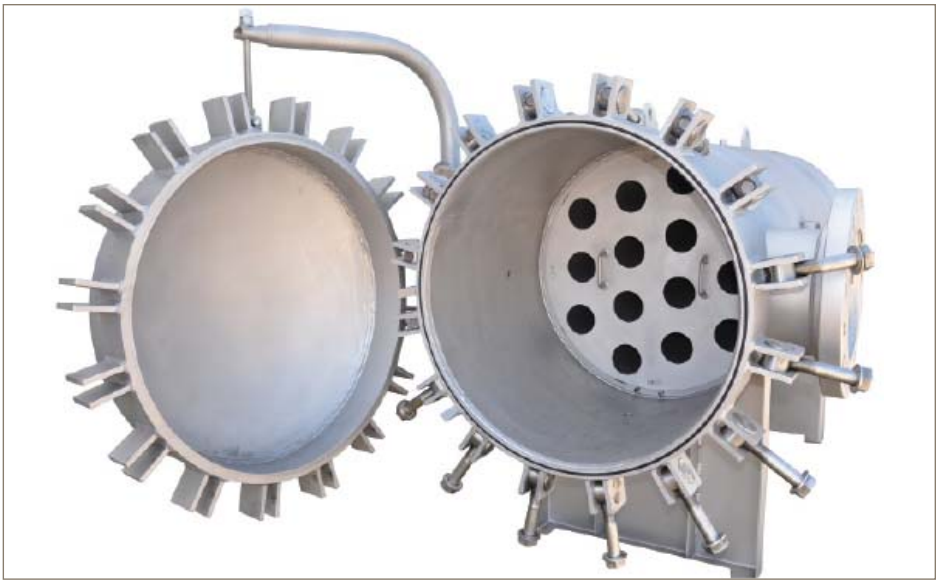

Contact Information

Parker Hannifin Corporation
Industrial Process Filtration - N.A.
118 Washington Avenue
Mineral Wells, TX 76067

phone +1 940 325 2575
industrialprocess.na@parker.com

www.parker.com/industrialprocess

Benefits

- Horizontal design makes cartridge change easier and quicker without need for elevated platform. Vertical orientation is also available.
- Large diameter cartridge yields high flow rate per cartridge resulting in fewer cartridges and smaller, lower cost vessels.
- Inside-out flow direction captures contaminates on the inside of the filter which makes changing cartridges less messy and quicker.
- Built to ASME Boiler And Pressure Code to insure integrity.
- Cartridges have external O-ring for positive seal
- Available in carbon steel, 304L stainless steel and 316L stainless steel for a wide variety of applications. Other alloys also available.
- O-ring cover seal for quick and positive vessel cover sealing.
- Cover locating pin for quick and accurate alignment.
- Available in 150 PSI and 300 PSI pressure ratings: custom pressure ratings available.

Applications

- Reverse Osmosis Filtration
- Potable Water
- Process Water
- Edible Oils
- Lubricants
- Coolants
- Cutting Oils
- Solvents
- Chemicals

ENGINEERING YOUR SUCCESS.

ParMax™ Filter Vessel

ParMax Filter Cartridges

- One six-inch diameter cartridge can handle up to 500gpm flow (60” length)
- The inside-to-outside flow allows for a high contaminant holding capacity
- High-flow and long filter life
- Ideal choice for a wide variety of critical process applications

Standard Design

The best of pleated and large diameter technologies are combined in Parker’s ParMax™ high-flow filter cartridges. The unique layered construction provides excellent retention across a wide range of flux rates. ParMax cartridges are available with polypropylene and microfiberglass media in absolute (99.98%) ratings from 1 to 90 microns.

SELECT Design

The unique layered construction and staged pleating of the ParMax™ Select cartridges provide improved dirt-holding capacity and retention across a wide range of flux rates. ParMax Select cartridges are available with polypropylene pleated depth media and microfiberglass media in absolute (99.98%) ratings from 1 to 90 microns.

Typical Aqueous Flow Rates

Optimal Flow Rate	Surface Area (ft^2)	Flux Rate (gpm/ft^2)
20″ Cartridge	**120 GPM**	
Standard	25	4.80
Select	32	3.75
40″ Cartridge	**240 GPM**	
Standard	50	4.80
Select	62	3.87
60″ Cartridge	**360 GPM**	
Standard	75	4.80
Select	94	3.83
Recommended Max. Flow Rate	**Surface Area (ft^2)**	**Flux Rate (gpm/ft^2)**
20″ Cartridge	**175 GPM**	
Standard	25	7.00
Select	32	5.47
40″ Cartridge	**350 GPM**	
Standard	50	7.00
Select	62	5.65
60″ Cartridge	**500 GPM**	
Standard	75	6.67
Select	94	5.32

Using higher flow rates than optimal can result in reduced cartridge efficiency and life as well as system filtrate velocities exceeding 10 feet per second.

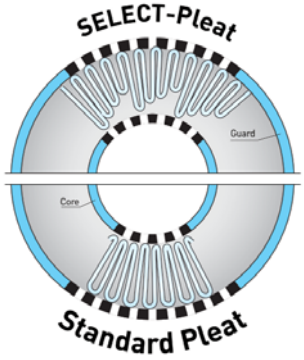

With Select Pleating, there is more open area on the inside of the cartridge for additional contaminant-holding capacity.

Specifications are subject to change without notification.
For User Responsibility Statement, see www.parker.com/safety

© 2017 Parker-Hannifin Corporation
Industrial Process Filtration - North America
All Rights Reserved

ParMax™ Filter Vessel

Design Specifications (All dimensions are inches)

Model *Material of Construction (C, G or S)	Cartridge Qty. in Vessel	H Overall Height (Horizontal)	L Overall Length (Horizontal)	Vessel Nominal Diameter	Optimal Inlet/Outlet Size	Max. Flow (gpm/ft²)†	Empty Vessel Weight‡ (lbs.)
40 INCH CARTRIDGE(S) - HORIZONTAL DESIGN							
PX * U0140H03F	1	43.0	60.2	8.0	3	350	250
PX * U0340H06F	3	58.4	69.8	16.0	6	1,050	694
PX * U0540H08F	5	59.0	77.0	20.0	8	1,750	935
PX * U0740H10F	7	60.0	79.7	22.0	10	2,450	1106
PX * U0840H10F	8	61.0	79.9	24.0	10	2,800	1248
PX * U1240H12F	12	64.0	88.4	30.0	12	4,200	1672
PX * U1540H14F	15	65.0	90.8	32.0	14	5,250	1938
PX * U1940H16F	19	67.3	94.5	36.0	16	6,650	2593
60 INCH CARTRIDGE(S) - HORIZONTAL DESIGN							
PX * U0160H04F	1	43.0	81.3	8.0	4	500	325
PX * U0360H08F	3	58.4	91.8	16.0	8	1,500	756
PX * U0560H10F	5	59.0	99.0	20.0	10	2,500	1070
PX * U0760H10F	7	60.0	99.7	22.0	10	3,500	1181
PX * U0860H12F	8	61.0	101.9	24.0	12	4,000	1389
PX * U1260H14F	12	64.0	109.7	30.0	14	6,000	1834
PX * U1560H16F	15	65.0	112.9	32.0	16	7,500	2113
PX * U1960H18F	19	67.3	116.5	36.0	18	9,500	2828

†Actual flow rate is dependent on fluid viscosity, micron rating, contaminant, media type and inlet velocity. Consult media flow charts for each application.
‡Shipping weights and dimensions are for 150 PSIG nominal design only. 40″ & 60″ refer to nominal cartridge length.

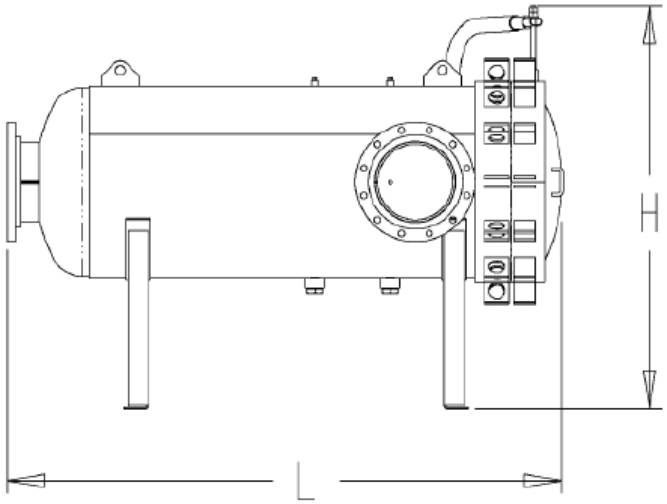

Specifications are subject to change without notification.
For User Responsibility Statement, see www.parker.com/safety

© 2017 Parker-Hannifin Corporation
Industrial Process Filtration - North America
All Rights Reserved

ParMax™ Filter Vessel

Design Specifications (All dimensions are inches)

Model *Material of Construction (C, G or S)	Cartridge Qty. in Vessel	H Overall Height (Vertical)	V Access Height (Vertical)	Vessel Nominal Diameter	Optimal Inlet/Outlet Size	Max. Flow† (gpm/ft²)	Empty Vessel Weight‡ (lbs.)
40 INCH CARTRIDGE(S) - VERTICAL DESIGN							
PX * U0140V03F	1	69.4	65.5	8.0	3"	350	250
PX * U0340V06F	3	94.3	81.9	16.0	6"	1,050	694
PX * U0540V08F	5	106.3	90.0	20.0	8"	1,750	935
PX * U0740V10F	7	115.2	98.8	22.0	10"	2,450	1106
PX * U0840V10F	8	115.5	98.8	24.0	10"	2,800	1248
PX * U1240V12F	12	129.0	110.3	30.0	12"	4,200	1672
PX * U1540V14F	15	135.0	115.8	32.0	14"	5,250	1938
PX * U1940V16F	19	143.6	123.4	36.0	16"	6,650	2593

†Actual flow rate is dependent on fluid viscosity, micron rating, contaminant, media type and inlet velocity. Consult media flow charts for each application.
‡Shipping weights and dimensions are for 150 PSIG nominal design only. 40" & 60" refer to nominal cartridge length.

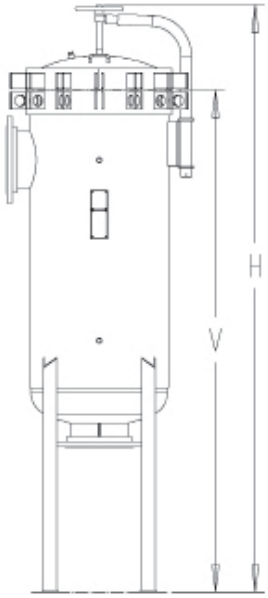

Maximum Operating Conditions

Material of Construction	Max. Operating Pressure (psi @ 250 °F)†	Max. Design Temp.††	Connection type
Carbon Steel	150psi (10.3bar)	250°F (121°C)	F
Carbon Steel	300psi (20.7bar)	250°F (121°C)	H
304 Stainless Steel	150psi (10.3bar)	250°F (121°C)	F
304 Stainless Steel	300psi (20.7bar)	250°F (121°C)	H
316 Stainless Steel	150psi (10.3bar)	250°F (121°C)	F
316 Stainless Steel	300psi (20.7bar)	250°F (121°C)	H

† Operating temperature limited by standard O-ring material and exterior paint.

Ordering Information

PX [ ] **U** [ ] [ ] [ ] [ ] [ ] [ ] [ ] [ ]

Material	
Code	Description
C	Carbon Steel
G	304L Stainless Steel
S	316L Stainless Steel

Design	
Code	Description
U	ASME Code

Cartridge Qty.	
Code	Amt.
01	1
03	3
05	5
07	7
08	8
12	12
15	15
19	19

Cartridge Length	
Code	Inches
40	40
60	60

Vessel Orientation	
Code	Description
H	Horizontal
V	Vertical*

*60″ vertical not recommended.

Optimal Inlet/Outlet Size	
Code	Inches
03	3
04	4
06	6
08	8
10	10
12	12
14	14
16	16
18	18

Inlet/Outlet Connection Type	
Code	Description
F	ANSI 150 lb. flange
H	ANSI 300 lb. flange

F=150 PSI vessel design
H=300 PSI vessel design

Finish	
Code	Description
C	Painted
B	Glass Bead Blast
P	Passivated

C is valid for carbon steel design only.

B & P are valid for stainless steel design only.

Specifications are subject to change without notification.
For User Responsibility Statement, see www.parker.com/safety

© 2017 Parker-Hannifin Corporation
Industrial Process Filtration - North America
All Rights Reserved
ParMax is a registered trademark of Parker-Hannifin Corporation

DS_GN_ParMax Vessel 11/11 Rev. A

Fulflo® S Multi-Cartridge Filter Vessel

ASME code filter vessel for liquid and gas applications

Fulflo® S series multi-cartridge filter vessels meet a broad range of liquid and gas applications for flow rates up to 2,040gpm (7,720 lpm). All details of design, materials, construction and workmanship of the S vessel series conform to ASME code.

The S vessel series accommodates double-open-end (DOE) or single-open-end (SOE) filter cartridges in 10 in., 20 in., 30 in. & 40 in. equivalents.

Contact Information

Parker Hannifin Corporation
Industrial Process Filtration - N.A.
118 Washington Avenue
Mineral Wells, TX 76067

phone +1 940 325 2575
industrialprocess.na@parker.com

www.parker.com/industrialprocess

Benefits

- Built in accordance with ASME boiler and pressure vessel code
- Available in 150psi (10.3bar) and 300psi (20.7bar) designs
- Mechanical coverlifts standard on most models
- S85 and S102 feature hydraulic coverlifts (available on all models as an option)
- Dual purpose cartridge seats for use with DOE and 2-222 O-ring SOE cartridges
- O-ring closure seal provides positive cover sealing
- All S models feature swing bolts with closures for quick cleaning and servicing
- Accepts DOE or SOE cartridges

Applications

- Liquid
- Gas
- Food & Beverage
- Chemical Processes
- Petrochemical
- Paints & Coatings

ENGINEERING YOUR SUCCESS.

Fulflo® S Filter Vessels

150 psi (10.3bar) Design Specifications

No. & Model	Cartridges		Max. Flow (gpm)	Dimensions (in.)									Shipping Weight (lbs.)
	Qty.	Length (in.)		A†	B	C	D	E	F	G	H	J††	
S25-3-4F	25	30	375	55.88	26.00	18.06	15.50	28	5	20.44	17.76	4	515
S25-4-6F	25	40	500	69.75	26.00	18.06	16.50	31	5	22.25	17.76	6	540
S35-3-4F	35	30	525	58.19	29.25	20.06	16.50	31	5	22.56	19.77	4	640
S35-3-6F	35	30	525	58.19	29.25	20.06	16.50	31	5	22.56	19.77	6	645
S35-4-6F	35	40	700	68.25	29.25	20.06	16.50	31	5	22.56	19.77	6	695
S40-3-6F	40	30	600	60.25	30.75	22.06	18.00	32	5	23.31	21.70	6	810
S52-3-4F	52	30	780	63.69	33.38	24.06	20.50	34	5	27.56	23.72	4	855
S52-3-6F	52	30	780	63,69	33.38	24.06	20.50	34	5	27.56	23.72	6	865
S52-4-8F	52	40	1040	73.69	33.38	24.06	20.50	34	5	27.56	23.72	6	900
S85-3-8F	85	30	1275	67.25	39.75	30.06	24.00	40	6	31.50	29.81	8	1170
S85-4-8F	85	40	1700	73.63	39.75	30.06	24.00	40	6	31.50	29.81	8	1200
S102-3-8F	102	30	1530	68.63	42.25	32.06	23.63	41.25	6	31.69	31.81	8	1450
S102-4-8F	102	40	2040	79.94	42.25	32.06	23.63	41.25	6	31.69	31.81	8	1600

† Add 5 in to this dimension for hydraulic coverlift.
†† Inlet and outlet size standard ASA flanges.

Maximum Operating Conditions

Material of Construction	Max. Operating Pressure (psi @ 250 °F)†	Max. Design Temp.††	Configs.
Carbon Steel	150psi (10.3bar)	500°F (260°C)	S
Carbon Steel	300psi (20.7bar)	500°F (260°C)	HS
304 Stainless Steel	150psi (10.3bar)	300°F (150°C)	S
304 Stainless Steel	300psi (20.7bar)	300°F (150°C)	HS
316 Stainless Steel	150psi (10.3bar)	400°F (204°C)	S
316 Stainless Steel	300psi (20.7bar)	400°F (204°C)	HS

† Operating temperature limited by standard O-ring material and exterior paint.

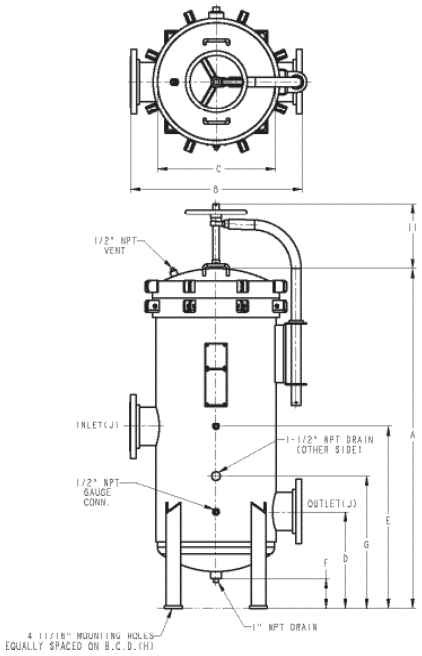

Optional Shell O-Ring/Gasket*					
Model	Part #				
	Buna-N	EPDM	FKM Viton®	Fluoropolymer	Neoprene
25 round	4151-1467	4154-5467	4152-8467	4150-5259	-
35 round	4150-5003	4150-5006	4150-5004	4150-5037	-
40 round	4151-1472	4154-5472	4152-8472	4151-5472	4154-1472
52 round	4150-5007	4150-5010	4150-5008	4150-5044	-
85 round	4150-5034	-	4150-5040	-	4150-5444
102 round	4150-5011	-	4150-5012	4150-5046	-

**Optional O-ring shipped separately*

Ordering Information

[ ] S [ ] — [ ] — [ ] [ ]

Material of Construction	
Code	Description
Blank	Carbon Steel
4	304 SS
6	316 SS

Design Series	
Code	Description
Blank	150 psi
H	300 psi

Cartridge Qty.
25
35
40
52
85
102

Cartridge Length	
Code	Inches
3	30
4	40

Inlet | Outlet Flange Size	
Code	Size
4F	4" Flange
6F	6" Flange
8F	8" Flange

Coverlift Option	
Code	Description
K1	Mechanical
K2	Hydraulic

Specifications are subject to change without notification.
For User Responsibility Statement, see www.parker.com/safety

© 2017 Parker-Hannifin Corporation
Industrial Process Filtration - North America
All Rights Reserved

Fulflo is a registered trademark of Parker-Hannifin Corporation
Viton is a registered trademark of E.I. DuPont de Nemours & Co., Inc.

DS_IP_S Vessel Rev. A

Fulflo® SF Multi-Cartridge Filter Vessel

ASME code, high flow rate filter vessel

Fulflo® SF multi-cartridge filter vessels meet a broad range of liquid and gas applications. All details of design, materials, construction and workmanship of the SF vessel series conform to ASME code.

The SF Vessel Series accommodates double-open-end (DOE) and single-open-end (SOE) cartridges in 10 in., 20 in., 30 in. and 40 in. equivalents.

Contact Information

Parker Hannifin Corporation
Industrial Process Filtration - N.A.
118 Washington Avenue
Mineral Wells, TX 76067

phone +1 940 325 2575
industrialprocess.na@parker.com

www.parker.com/industrialprocess

Benefits

- Designed and fabricated in accordance with the ASME Boiler and Pressure Vessel Code, U or UM stamp
- Mechanical coverlifts of carbon steel construction standard on models SF12 and SF19
- Designed for minimum pressure drop
- External welded attachments on stainless steel models are also stainless steel
- Dual purpose cartridge seats for use with double open end & 2-222 O-ring single open end cartridges
- All SF models feature swing bolts with eyenuts for easier cleaning & servicing
- O-ring seals provide positive closure
- Hydraulic coverlifts optional on SF12 and SF19 models

Applications

- Water
- Concentrated Alkalies
- Dilute Acids & Alkalies
- Mineral Acids
- Organic Acids
- Oxidizing Agents
- Solvents
- Petroleum Oils
- Potable Liquids
- Photo Solutions

ENGINEERING YOUR SUCCESS.

Fulflo® SF Filter Vessels

Design Specifications

No. & Model	Cartridges		Flow (gpm)	Dimensions (in.)									
	Qty.	Length (in.)		A†	B	C	D	E	F	G	H	J††	Shipping Weight (lbs.)
SF3-1-2F	3	10	15	26.69	12.69	6.63 OD	8.19	16.19	5.00	11.31	5.81	2	125
SF6-1-2F	6	10	30	26.94	14.88	8.63 OD	8.19	16.19	5.06	11.31	7.81	2	180
SF6-2-2F	6	20	60	37.00	14.88	8.63 OD	8.19	16.19	5.06	11.31	7.81	2	185
SF6-3-2F	6	30	90	47.06	14.88	8.63 OD	8.19	16.19	5.06	11.31	7.81	2	200
SF6-4-3F	6	40	120	58.50	14.88	8.63 OD	8.19	16.19	5.06	12.00	7.81	3	220
SF12-3-3F	12	30	180	53.75	20.50	12.06 ID	13.38	21.00	5.00	17.88	11.68	3	310
SF12-3-4F	12	30	180	53.75	20.50	12.06 ID	13.38	21.00	5.00	17.88	11.68	4	315
SF12-4-4F	12	40	240	60.31	20.50	12.06 ID	13.38	21.00	5.00	17.88	11.68	4	330
SF19-3-4F	19	30	285	50.19	23.50	15.06 ID	13.38	21.00	5.00	17.88	14.75	4	420
SF19-4-4F	19	40	380	60.31	23.50	15.06 ID	13.38	21.00	5.00	17.88	14.75	4	440

† Add 5 inches to this dimension for hydraulic coverlift. †† Inlet and outlet size standard ASA flanges.

Maximum Operating Conditions

Material of Construction	Max. Operating Pressure (psi @ 250 °F)†	Max. Design Temp.††	Configs.
Carbon Steel	150psi (10.3bar)	500°F (260°C)	SF
Carbon Steel	300psi (20.7bar)	500°F (260°C)	HSF
304 Stainless Steel	150psi (10.3bar)	300°F (150°C)	SF
304 Stainless Steel	300psi (20.7bar)	300°F (150°C)	HSF
316 Stainless Steel	150psi (10.3bar)	400°F (204°C)	SF
316 Stainless Steel	300psi (20.7bar)	400°F (204°C)	HSF

† Operating temperature limited by standard O-ring material and exterior paint.

Optional Shell O-Ring/Gasket*					
Model	Part #				
	Buna-N	EPDM	Viton®	Fluoropolymer	Fluoropolymer encapsulated Viton®
3 round	4151-1366	-	4152-8366	4151-5366	-
6 round	4151-1374	4154-5374	4152-8374	4151-5374	-
12 round	4151-1454	4154-5454	4152-8454	4151-5454	4150-5379
19 round	4151-1460	4154-5460	4152-8460	4151-5460	-

*Optional O-ring shipped separately

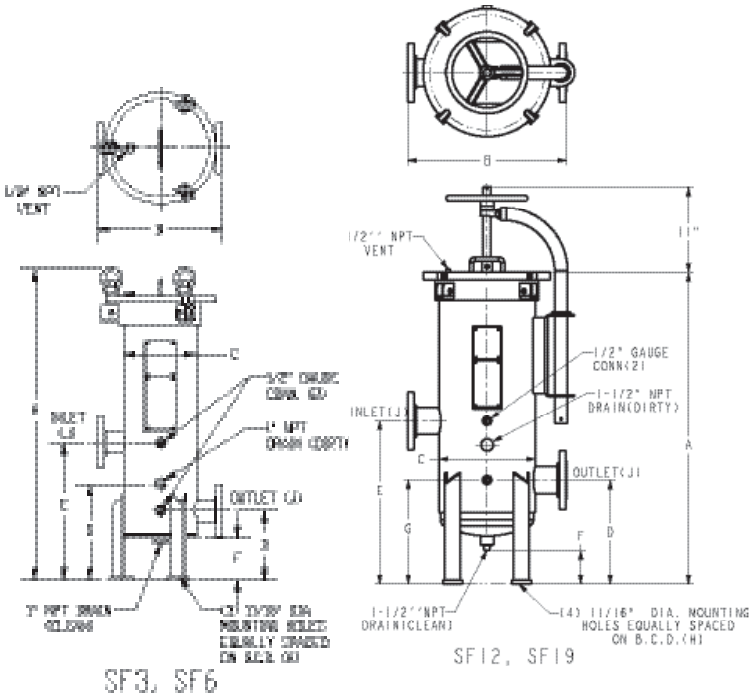

Ordering Information

SF [ ] — [ ] — [ ]

Material of Construction	
Code	Description
Blank	Carbon Steel
4	304 SS
6	316 SS

Design Series	
Code	Description
Blank	150 psi
H	300 psi

Cartridge Qty.
3
6
12
19

Cartridge Length	
Code	Inches
1	10
2	20
3	30
4	40

Inlet | Outlet Flange Size	
Code	Size
2F	2" Flange
3F	3" Flange
4F	4" Flange

Coverlift Option	
Code	Description
K1	Mechanical
K2	Hydraulic

Specifications are subject to change without notification.
For User Responsibility Statement, see www.parker.com/safety

© 2017 Parker-Hannifin Corporation
Industrial Process Filtration - North America
All Rights Reserved

Fulflo is a registered trademark of Parker-Hannifin Corporation
Viton is a registered trademark of E.I. DuPont de Nemours & Co., Inc.

Fulflo® WH Multi-Cartridge Filter Vessel

304 and 316 stainless steel filter vessel (non ASME code)

The WH cartridge filter vessels are a lightweight, economical, Non-ASME industrial / commercial design suitable for a wide variety of filtration applications. The 100% stainless steel and passivated finish provides superior corrosion resistance and an excellent appearance. The swing type closure bolts and hinged cover design (up to 35 round) make cartridge change-out quick and easy.

Contact Information

Parker Hannifin Corporation
Industrial Process Filtration - N.A.
118 Washington Avenue
Mineral Wells, TX 76067

phone +1 940 325 2575
industrialprocess.na@parker.com

www.parker.com/industrialprocess

Benefits

- Hinged cover (up to 35 round) and swing bolt closure for fast, easy cartridge change-out
- Maximum design pressure is 150psi (10.3bar) at 250°F (121°C) for use in a wide range of operating conditions
- 100% stainless steel for corrosion resistance. Bolting is zinc plated carbon steel
- Dual purpose cartridge seats for use with double open end & 2-222 O-ring single open end cartridges
- Standard finish is passivated
- 316 stainless steel cartridge seats, top seat plate assemblies, & tri-fold element guides for long term use
- Standard Buna-N O-ring with optional fluoroelastomer and EPR for wide range of applications
- Standard features include vent, clean drain & dirty drain connections

Applications

- Potable Water
- Process Water
- Edible Oils
- Beverages
- Chemicals
- Solvents
- Pre-Reverse Osmosis

ENGINEERING YOUR SUCCESS.

Fulflo® WH Filter Vessels

Design Specifications

Model *Material of Construction (G or S)	Cartridges		Typical Flow† (gpm)	Dimensions (in.)								Shipping Weight (lbs)
	Qty.	Length (in.)		A	B	C	D	E	F	G	H	
WH*4S1.5T	4	10	28	22.56	19.56	10.06	5.25	3.00	10.75	8.25	9.63	55
WH*4D2T	4	20	56	32.63	29.63	10.38	5.25	3.00	10.75	8.25	9.63	60
WH*4T2T	4	30	84	46.69	39.69	10.38	5.25	3.00	10.75	8.25	9.63	65
WH*4Q2T	4	40	112	56.75	49.75	10.38	5.25	3.00	10.75	8.25	9.63	70
WH*9T3F	9	30	189	51.94	49.38	15.49	14.00	5.75	21.50	18.25	10.46	165
WH*9Q3F	9	40	252	62.00	59.44	15.49	14.00	5.75	21.50	18.25	10.46	180
WH*12T3F	12	30	252	51.94	49.38	16.80	14.00	7.29	21.50	18.25	11.72	175
WH*12Q3F	12	40	336	62.00	59.44	16.80	14.00	7.29	21.50	18.25	11.72	195
WH*16T4F	16	30	336	52.06	49.38	19.05	14.00	7.02	24.50	18.25	13.74	235
WH*16Q4F	16	40	448	62.13	59.44	19.05	14.00	7.02	24.50	18.25	13.74	150
WH*21T4F	21	30	441	52.06	49.38	21.30	14.00	6.29	24.50	18.25	15.76	165
WH*21Q4F	21	40	588	62.13	59.44	21.30	14.00	6.29	24.50	18.25	15.76	185
WH*29T6F	29	30	609	68.35	52.56	23.52	16.00	6.93	27.75	22.00	17.80	395
WH*29Q6F	29	40	812	78.41	62.63	23.52	16.00	6.93	27.75	22.00	17.80	420
WH*35T6F	35	30	735	68.62	52.56	25.52	16.00	6.26	27.75	22.00	19.81	445
WH*35Q6F	35	40	980	78.68	62.63	25.52	16.00	6.26	27.75	22.00	19.81	470

†Actual flow rate is dependent on fluid viscosity, micron rating, contaminant and media type. Consult flow charts for each application. Flow rates shown do not consider inlet velocity limitations.

WH4 | WH9 | WH12 | WH16 | WH21

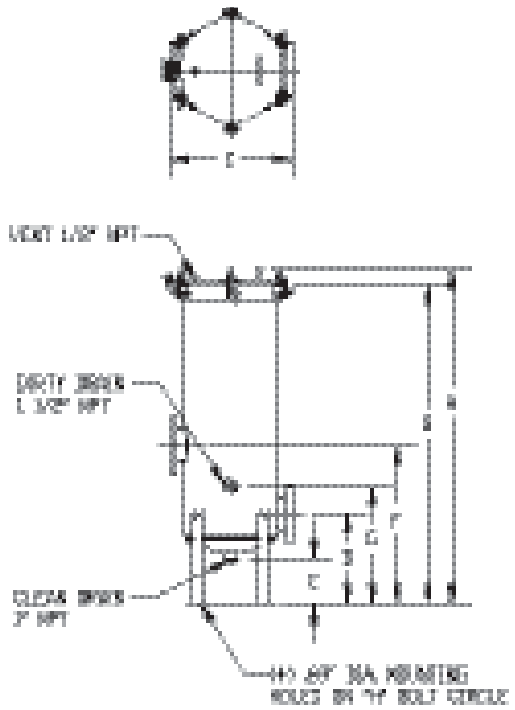

WH29 | WH35

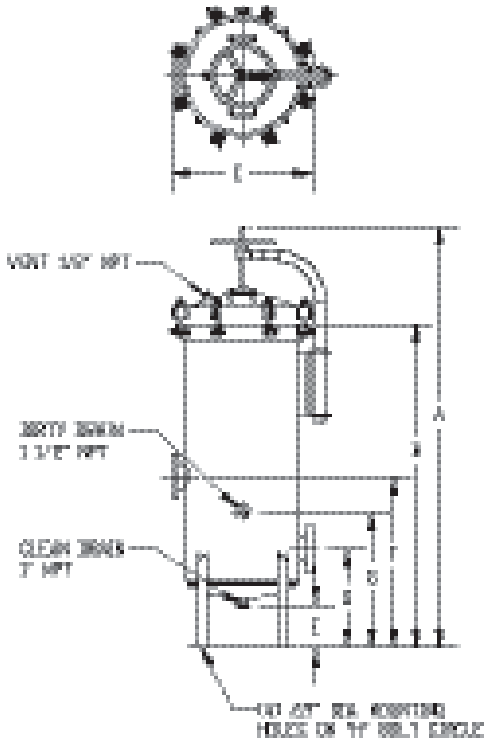

Specifications are subject to change without notification.
For User Responsibility Statement, see www.parker.com/safety

© 2017 Parker-Hannifin Corporation
Industrial Process Filtration - North America
All Rights Reserved

Fulflo® WH Filter Vessels

Material of Construction	Max. Allowable Pressure (MAP) (psi @ MAT °F)	Max. Allowable Temp. (MAT) (°F @ MAP psi)
304 Stainless	150psi (10.3bar)	250°F (121°C)*
316 Stainless		

*Limited to 250°F by the standard Buna-N O-ring

Optional Shell O-Ring/Gasket*			
Model	Part #		
	Buna-N	Viton®	EPDM
4 round	4150-5706	4150-5707	4150-5708
9 round	4150-5702	4150-5703	4150-5704
12 round	4150-5680	4150-5700	4150-5689
16 round	4150-5681	4150-5701	4150-5690
21 round	4150-5612	4150-5686	4150-5691
29 round	4150-5682	4150-5687	4150-5692
35 round	4150-5683	4150-5688	4150-5693

**Optional O-ring shipped separately*

Ordering Information

WH

Design Series

Material of Construction	
Code	Description
G	304 SS
S	316L SS

Cartridge Qty.
4
9
12
16
21
29
35

Cartridge Length	
Code	Inches
S	10
D	20
T	30
Q	40

Inlet | Outlet	
Code	Inches
1.5	1.5
2	2
3	3
4	4
6	6

Inlet | Outlet Type	
Code	Description
F	ANSI 150lb RFSO Flange
T	FNPT

Finish	
CODE	DESCRIPTION
P	Passivated

Specifications are subject to change without notification.
For User Responsibility Statement, see www.parker.com/safety

© 2017 Parker-Hannifin Corporation
Industrial Process Filtration - North America
All Rights Reserved
Fulflo is a registered trademark of Parker-Hannifin Corporation

DS_IP_WH Vessel Rev. A

This page is intentionally blank.

Toll free sales & technical support:
940.325.2575

industrialprocess.na@parker.com

www.parker.com/industrialprocess

Bag Filter Vessel Series

Fulflo® CB Filter Vessel
Carbon steel, 304 & 316 stainless steel bag filter vessel

Fulflo® EB Multi-Bag Filter Vessel
304 stainless steel, commercial (non ASME code) design

Fulflo® EB Single Bag Filter Vessel
304 stainless steel, commercial (non ASME code) design

Fulflo® FB Filter Vessel
Designed for economical filtration of liquids and gases

Fulflo® SB Filter Vessel
ASME code single and multiple bag vessels for high flow rates and high solids retention

Toll free sales & technical support:
940.325.2575
industrialprocess.na@parker.com

Fulflo® CB Bag Filter Vessels

Carbon steel, 304/316 stainless steel, non-ASME code bag filter vessel

The Fulflo® CB filter vessel series is an economical design that features the integrity of a swing bolt for fast, easy opening and closing. The CB series is available in either carbon steel, 304 or 316 stainless steel. It comes with standard zinc plated bolts and legs for corrosion resistance but are also offered with stainless steel options. The integral basket support provides a smooth interior for easy cleaning and bag installation.

The Fulfo CB filter vessel is for use with either single or double length bags with flex type bands or flared plastic rings and can also be used with solid ring and plastic ring bags by using the optional bag sealing insert and adding an O-ring under the basket rim. The adjustable legs offer installation flexibility by allowing various inlet elevations and nozzle orientations. Wall mounting brackets are available as well.

The CB filter vessel series replaces the FCB filter vessel series.

Benefits

- Single O-ring design closure assures quick, positive cover sealing
- Swing bolts for fast, and easy opening and closing of cover
- Maximum design pressure is 175psi (12bar) at 250°F (121°C)
- Commercial engineering non-code design
- Threaded vent & drain connections
- Carbon steel with zinc plated support basket or 304/316 SS with 316 SS support basket
- Optional mounting wall bracket (P/N 0820-6005)
- Adjustable leg height
- Side inlet allows cover to open without disconnecting piping
- Integral basket support design provides a smooth interior for easy wash-out and cleaning
- Pivot pin cover allows cover to remain attached when opened
- Positive seal of “C” style flex band bags prior to closing the vessel cover
- Optional retainer assembly for conversion to solid ring (“G”style) and plastic ring (“Q” style) bags (P/N 5020-5244)
- Zinc plated closure bolts and legs for corrosion resistance

Applications

- Potable Water
- Cutting Oils
- Solvents
- Coolants
- Process Water
- Coatings
- Lubricant

Contact Information

Parker Hannifin Corporation
Industrial Process Filtration - N.A.
118 Washington Avenue
Mineral Wells, TX 76067

phone +1 940 325 2575
industrialprocess.na@parker.com

www.parker.com/industrialprocess

ENGINEERING YOUR SUCCESS.

Fulflo® CB Bag Filter Vessels

Available Finishes

- Enamel exterior paint on carbon steel models
- Glass bead blast finish on stainless models

Material of Construction	Max. Allowable Pressure (MAP) (psi @ MAT ºF)	Max. Allowable Temp. (MAT) (ºF @ MAPpsi)
Carbon Steel	175psi (12.1bar)	400ºF (204ºC)* **
304 Stainless	175psi (12.1bar)	400ºF (204ºC)**
316 Stainless	175psi (12.1bar)	400ºF (204ºC)**

* Limited to 250ºF by the paint

**Limited to 250ºF by the std. Buna-N O-ring

Model *Material of Construction (C, G or S)	Bag Style	Typical Aqueous Flow† (gpm)	Dimensions			Shipping Weight (lbs)	Volume (gal.)
			D	E	OAH		
CB*1S2T	Single	80	20.41	25.00	40.94	65	4.3
CB*1D2T	Double	160	35.41	40.00	55.94	90	7.2

† Actual flow rate is dependent on fluid viscosity, micron rating, contaminant and media type.
Consult flow charts for each application.

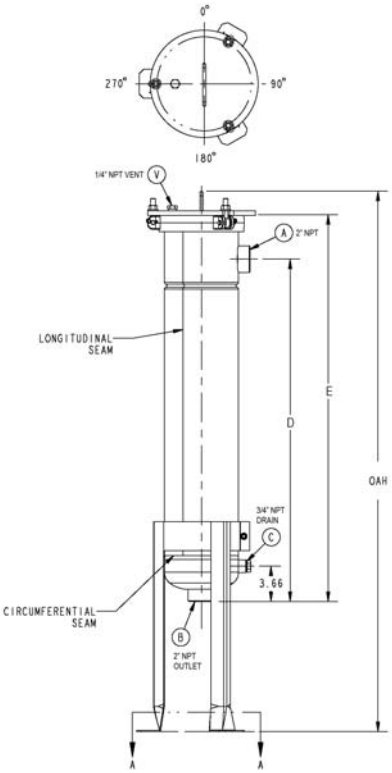

Ordering Information

CB [ ] 1 [ ] 2T [ ]

Material	
Code	Description
C	Carbon Steel
G	304 Stainless Steel
S	316 Stainless Steel

Bag Length	
Code	Inches
S	17.5
D	31.5

Inlet/Outlet Flange Size	
Code	Inches
2T	2" NPT

Support Options	
Code	Description
Blank	Zinc plated carbon steel legs
W	Wall Mounted/No legs
SL	Stainless steel legs
SB	Stainless steel cover bolts
SS	Stainless steel bolts & legs

Example Part# Configuration for Orders (no dashes):
CBC1S2T
CBG1D2TW

Specifications are subject to change without notification.
For User Responsibility Statement, see www.parker.com/safety

© 2017 Parker-Hannifin Corporation
Industrial Process Filtration - North America
All Rights Reserved

Fulflo is a registered trademark of Parker-Hannifin Corporation
Viton is a registered trademark of E.I. DuPont de Nemours & Co., Inc.

Fulflo® EB Multi-Bag Filter Vessel

304 stainless steel, commercial (non ASME code) design

The Fulflo EB non ASME code multi-bag filter vessels provide economical filtration of a wide variety of liquids in a bottom-in bottom-out, externally polished stainless steel design.

Features include a swing bolt secured, quick opening cover and individual internal bag sealing devices.

EB multi-bag vessels accommodate #2 (double length) Parker “G” style bags with a 7" diameter rim.

These vessels are manufactured from polished and passivated 304 stainless steel and rated for 150 psi (10.3 bar). For added corrosion resistance, all cover bolt, cover davit and mounting legs are also stainless steel.

Contact Information

Parker Hannifin Corporation
Bioscience Division - N.A.
2340 Eastman Avenue
Oxnard, CA 93030

phone +1 805 604 3583
bioscience.na@parker.com

www.parker.com/bioscience

Benefits

- Swing bolted o-ring closure seal provides quick and positive seal and easy access to the vessel interior and filter bags.
- ANSI B16.5 flanged inlet & outlet connections
- EPDM seals are standard with other material options available
- Standard threaded FNPT vent and drains
- Standard stainless steel closure bolt hardware
- Polished exterior and pickle passivate interior/exterior for enhanced corrosion resistance
- Bottom in-line connection design

Applications

- Potable Water
- Cutting Oils
- Solvents
- Coolants
- Process Water
- Coatings
- Lubricant

ENGINEERING YOUR SUCCESS.

Fulflo® EB Multi-Bag Filter Vessel

Material of Construction	Max. Allowable Pressure (MAP) (psi @ MAT °F)	Max. Allowable Temp. (MAT) (°F @ MAPpsi)
304 Stainless	150 psi (10.3 bar)	300°F (149°C)

Optional O-Ring/Gasket*				
Material	4 round		6 round	
	Cover seal part #	Basket seal part #	Cover seal part #	Basket seal part #
Nitrile (Buna-N)	4150-5839-N	4150-5834-N	4150-5841-N	4150-5834-N
EPDM (EPR)**	4150-5839-E	4150-5834-E	4150-5841-E	4150-5834-E
FKM (Viton®)	4150-5839-V	4150-5834-V	4150-5841-V	4150-5834-V

*Optional O-ring shipped separately
**EPDM o-ring is standard.

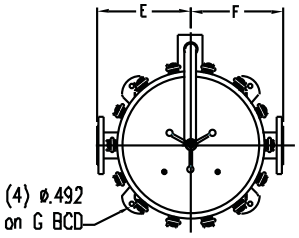

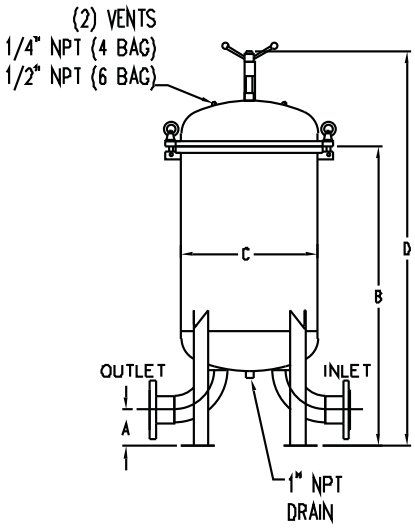

Typical aqueous flow*		
Model	Bag Qty.	Capacity (gpm)
EBG_4	4 x #2	640
EBG_6	6 x #2	960

*Based on 160 gpm water per #2 double bag

Vessel dimensions								
Model	A	B	C	D	E	F	G	Weight (lbs)
EBG4D4F	5.94	46.06	21.88	62.00	16.00	16.00	27.75	419
EBG6D6F	7.09	53.13	27.81	70.69	17.44	17.44	33.94	660

Ordering Information

4 Bag Vessel

EB

Material of Construction	
Code	Description
G	304 SST

Bag	
Code	Qty.
4	4

Bag Length	
Size	Inches
D	31.5

Inlet/Outlet Connection	
Code	Size
4F	4" Flange

6 Bag Vessel

EB

Material of Construction	
Code	Description
G	304 SST

Bag	
Code	Qty.
6	6

Bag Length	
Size	Inches
D	31.5

Inlet/Outlet Connection	
Code	Size
6F	6" Flange

Replacement Parts		
Model(s)	Part Number	Description
All	2390-5004	Cover Bolt Assembly†
All	4150-5834-E	O-ring, Basket EPDM
All	4150-5834-N	O-ring, Basket Buna-N
All	4150-5834-V	O-ring, Basket FKM (Viton®)
All	0370-5325	Basket, Double Length - 304SS
All	5260-5241	Davit Screw
All	2880-5024	Davit Wing Handle
All	5020-5249	Retainer Bag - 304SS
All	5020-5255	Retainer Bag - 316SS
EBG4	4150-5839-E	O-ring, Cover EPDM
EBG4	4150-5839-N	O-ring, Cover Buna-N
EBG4	4150-5839-V	O-ring, Cover FKM (Viton®)
EBG4	4452-5170	Davit Arm
EBG6	4150-5841-E	O-ring, Cover EPDM
EBG6	4150-5841-N	O-ring, Cover Buna-N
EBG6	4150-5841-V	O-ring, Cover FKM (Viton®)
EBG6	4452-5171	Davit Arm

†Bolt assembly includes 1 each bolt, nut, washer, pin and retainer.

Specifications are subject to change without notification.
For User Responsibility Statement, see www.parker.com/safety

© 2017 Parker-Hannifin Corporation
Bioscience Division - North America
All Rights Reserved

Fulflo is a registered trademark of Parker-Hannifin Corporation
Viton is a registered trademark of E.I. DuPont de Nemours & Co., Inc.

DS_IP_ EB Multi Bag Vessel 2/14 Rev. C

Fulflo® EB Single Bag Filter Vessel

304 & 316 stainless steel, commercial (non ASME code) design

The Fulflo EB non ASME code single bag filter vessels provide economical filtration of a wide variety of liquids in a lightweight, externally polished stainless steel design. Features include a secured swing bolt quick open cover and an internal positive pressure bag hold down device.

EB single bag vessels are available to accommodate common industrial filter bag sizes 1, 2, 3 and 4.

These vessels are manufactured from polished and passivated stainless steel and rated for 150 psi (10.3 bar). For added corrosion resistance, all cover bolt and leg mounting hardware is made from stainless steel as well.

Contact Information

Parker Hannifin Corporation
Bioscience Division - N.A.
2340 Eastman Avenue
Oxnard, CA 93030

phone +1 805 604 3583
bioscience.na@parker.com

www.parker.com/bioscience

Benefits

- Swing bolted o-ring closure seal provides quick & positive seal with easy access to the vessel interior and filter bag
- Both FNPT threaded and flanged connections are available in specific models
- NPT models offers dual 2" outlet ports on bottom and side locations
- EPDM seals are standard with other material options available
- Standard threaded FNPT vent & drains
- Standard stainless steel closure bolt hardware
- Polished exterior & pickle passivate interior/exterior for enhanced corrosion resistance
- Mounting legs are adjustable, providing flexibility for installation height & orientation
- Hinged cover for ease of use

Applications

- Potable Water
- Cutting Oils
- Solvents
- Coolants
- Process Water
- Coatings
- Lubricant

Parker domnick hunter

ENGINEERING YOUR SUCCESS.

Fulflo® EB Single Bag Filter Vessel

SIZE S

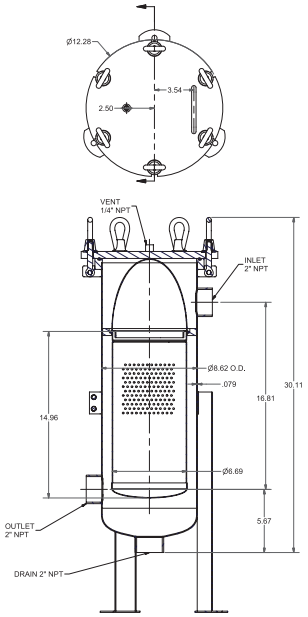

Vessel designed to use (1) **#1**
Parker 'G' style bag with 7-1/4" diameter rim
Inlet elevation adjustable from approx. 21" to 33"

SIZE D

(shown in flange & NPT styles)

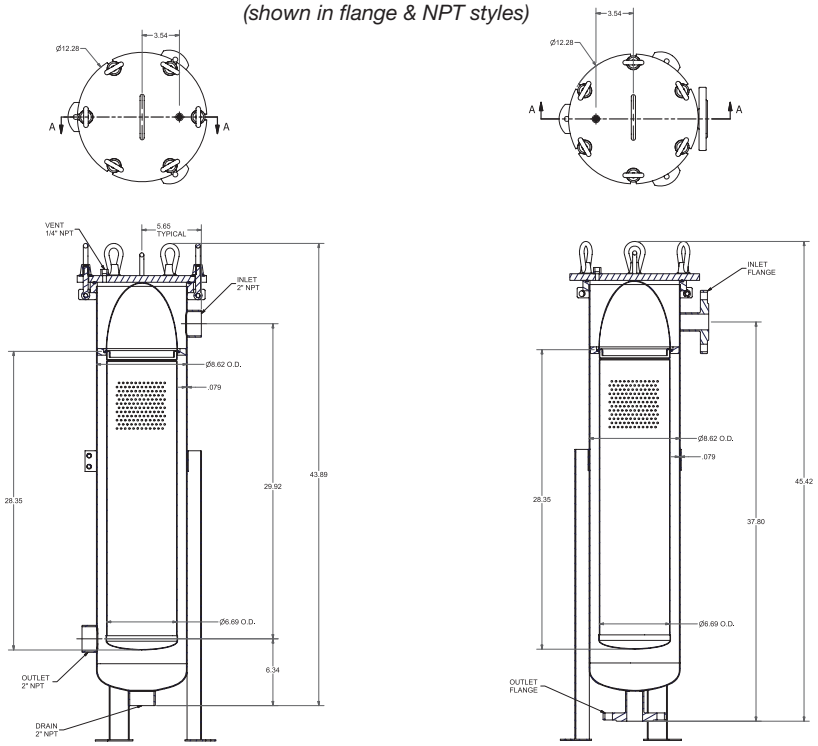

Vessel designed to use (1) **#2**
Parker 'G' style bag with 7-1/4" diameter rim
Inlet elevation adjustable from approx. 37" to 53"

SIZE 3

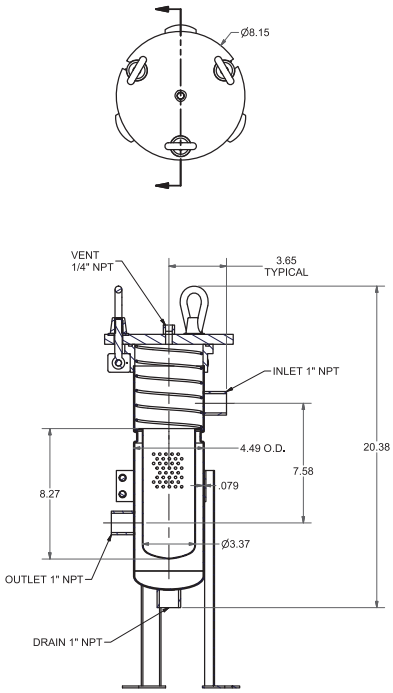

Vessel designed to use (1) **#3**
Parker 'G' style bag with 4-1/4" diameter rim
Inlet elevation adjustable from approx. 15" to 19"

SIZE 4

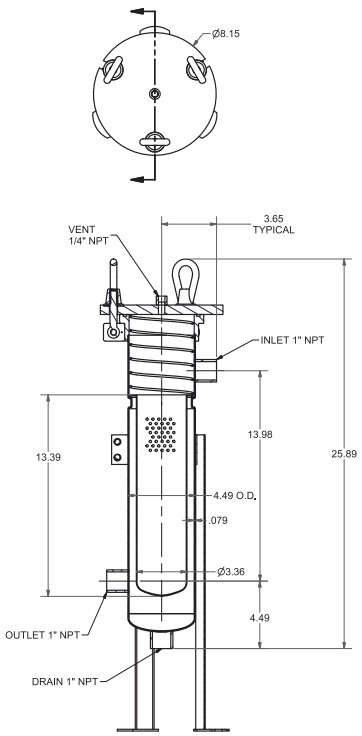

Vessel designed to use (1) **#4**
Parker 'G' style bag with 4-1/4" diameter rim
Inlet elevation adjustable from approx. 19" to 30"

Specifications are subject to change without notification.
For User Responsibility Statement, see www.parker.com/safety

© 2017 Parker-Hannifin Corporation
Bioscience Division - North America
All Rights Reserved

Fulflo® EB Single Bag Filter Vessel

Material of Construction	Max. Allowable Pressure (MAP) (psi @ MAT °F)	Max. Allowable Temp. (MAT) (°F @ MAP psi)
304 & 316 SST	150 psi (10.3 bar)	300°F (149°C)

Optional O-Ring/Gasket		
Material	Cover seal part #	Basket seal part #
Nitrile (Buna-N)	4150-5835-N	4150-5834-N
EPDM (EPR)*	4150-5835-E	4150-5834-E
FKM (Viton®)	4150-5835-V	4150-5834-V**

*EPDM o-ring is standard. O-ring installed under cover and basket rim
**Vessel temperature limited to 300°F (149°C)

Typical Aqueous Flow
Based on 160 gpm water per #2 double bag & 80 gpm per #1 single bag

Ordering Configurations (Size 1 & 2)							
Part #	Material	Industry Size	Bag Length	Bag Diameter (in.)	Connection	Features	Weights (lbs.)
EBG1S2T	304SS	1	16	7	2" NPT	Side in/bottom out or side out design with adjustable legs	64
EBG1D2T	304SS	2	32	7	2" NPT	Side in/bottom out or side out design with adjustable legs	82
EBG1D2F	304SS	2	32	7	2" Flange	Side in/bottom out with adjustable legs	82
EBS1D2T	316SS	2	32	7	2" NPT	Side in/bottom out or side out design with adjustable legs	82
EBS1D2F	316SS	2	32	7	2" Flange	Side in/bottom out with adjustable legs	82
Ordering Configurations (Size 3 & 4)							
EBG131T	304SS	3	8	4	1" NPT	Side in/bottom out or side out design with adjustable legs	24
EBG141T	304SS	4	14	4	1" NPT	Side in/bottom out or side out design with adjustable legs	29

Ordering Information

EB [S] [1] [ ] [ ]

Material of Construction	
Code	Description
S	316 SST

Cartridge Qty.
1

Bag Length	
Size	Inches
D	32

Inlet/Outlet Connection	
Code	Size
2F	2" Flange
2T	2" NPT

EB [G] [1] [ ] [ ]

Material of Construction	
Code	Description
G	304 SST

Cartridge Qty.
1

Bag Length	
Size	Inches
3*	8
4*	14
S**	16
D***	32

Inlet/Outlet Connection	
Code	Size
1T	1" NPT
2F	2" Flange
2T	2" NPT

** Only avail. in 1" NPT*
*** Only avail. in 2" NPT*
****Only avail. in 2" NPT & 2" Flange*

Size S (1) & D (2) Replacement Parts	
Part Number	Description
2390-5003	Cover Bolt Assembly†
4150-5835-E	O-ring, Cover EPDM
4150-5835-N	O-ring, Cover Buna-N
4150-5835-V	O-ring, Cover FKM (Viton®)
4150-5834-E	O-ring, Basket EPDM
4150-5834-N	O-ring, Basket Buna-N
4150-5834-V	O-ring, Basket FKM (Viton®)
0370-5325	Basket, Double Length - 304SS
0370-5343	Basket, Double Length - 316SS
5020-5248	Retainer Bag - 304SS
5020-5254	Retainer Bag - 316SS
3420-5492	Leg Assembly Size 2 - 304SS
3420-5495	Leg Assembly Size 1 - 304SS

†Bolt assembly includes 1 each bolt, nut, washer, pin & retainer.

Size 3 & 4 Replacement Parts	
Part Number	Description
2390-5003	Cover Bolt Assembly†
4154-5350	O-ring, Cover EPDM
4151-1350	O-ring, Cover Buna-N
4152-8350	O-ring, Cover FKM (Viton®)
4154-5155	O-ring, Basket EPDM
4151-1155	O-ring, Basket Buna-N
4152-8155	O-ring, Basket FKM (Viton®)
0370-5366	Basket, #3
0370-5367	Basket, #4
5830-6004	Spring Retainer
3420-5493	Leg Assembly #3 - 304SS
3420-5494	Leg Assembly #4 - 304SS

†Bolt assembly includes 1 each bolt, nut, washer, pin & retainer.

Specifications are subject to change without notification.
For User Responsibility Statement, see www.parker.com/safety

© 2017 Parker-Hannifin Corporation
Bioscience Division - North America
All Rights Reserved
Fulflo is a registered trademark of Parker-Hannifin Corporation
Viton is a registered trademark of E.I. DuPont de Nemours & Co., Inc.

This page is intentionally blank.

Fulflo® FB Filter Vessels

ASME code design for economical filtration of liquids and gases

The Fulflo® FB series of bag and strainer filter vessels provides excellent filtration in a wide range of industrial and chemical applications. All details of design, materials, construction and workmanship of the FB Vessel Series conform to ASME code and are available in non-code design and construction.

Contact Information

Parker Hannifin Corporation
Industrial Process Filtration - N.A.
118 Washington Avenue
Mineral Wells, TX 76067

phone +1 940 325 2575
industrialprocess.na@parker.com

www.parker.com/industrialprocess

Benefits

- Single O-ring design closure assures quick, positive cover sealing (O-rings are not required to seal filter bags.)
- Swing bolts with eyenuts for fast, easy opening and closing of cover
- Buna-N O-ring standard with EPDM, Viton® and fluoropolymer available
- Maximum design pressure is 150psi (10.3bar) at 450°F** (232°C)
- ASME Code UM stamp is standard (U stamp is optional)
- Threaded vent and drain connections
- Adjustable leg height. Threaded or flanged inlet and outlet
- Side inlet; cover opens without disconnecting piping
- Side inlet, bottom outlet and crevice-free welded design provide a smooth interior for easy wash-out and cleaning
- Hinged cover for easy opening
- Positive seal of ″C″ style flex band bags prior to closing the vessel cover
- Optional hold-down assembly for conversion to “G” style bag media seal available.

Applications

- Potable Water
- Process Water
- Coatings
- Lubricants
- Coolants
- Cutting Oils
- Solvents

ENGINEERING YOUR SUCCESS.

Fulflo® FB Filter Vessels

Design Specifications

Model	Cartridge No. & Length (in.)	Typical Aqueous Flow† (gpm)	Typical Dimensions (in)					Shipping Wt. (lbs)	Volume (gal)
			A	B	C	D	E		
FB11-2	Single	80	43.06	5.75	35.63	13.19	2 NPT	90	5.4
FB11-2F	Single	80	43.06	8.00	35.63	12.00	2 NPS	100	5.4
FB12-2	Double	160	53.94	5.75	46.50	13.19	2 NPT	95	7.8
FB12-2F	Double	160	53.94	8.00	46.50	12.00	2 NPS	105	7.8
FB12-3F	Double	160	53.94	8.00	46.50	11.75	3 NPS	115	7.8

† Actual flow rate is dependent on fluid viscosity, micron rating, contaminant and media type. Consult flow charts for each application.

Maximum Operating Conditions

Material of Construction	Max. Allowable Pressure (MAP) (psi @ MAT °F)	Max. Allowable Temp. (MAT) (°F @ MAP psi)
Carbon Steel	150psi (10.3bar)	450°F (232°C)* **
304L Stainless	150psi (10.3bar)	450°F (232°C)**
316L Stainless	150psi (10.3bar)	450°F (232°C)**

*Limited to 250°F by the paint

**Limited to 250°F by the standard Buna-N O-ring

Optional O-Ring/Gasket*		
Material	Cover seal part #	Basket seal part #
Nitrile (Buna-N)	4151-1371	4151-1440
EPDM (EPR)	4154-5371	4154-5440
FKM (Viton®)	4152-8371	4152-8440
Fluoropolymer	4151-5371	4151-5440

*Optional O-ring shipped separately.

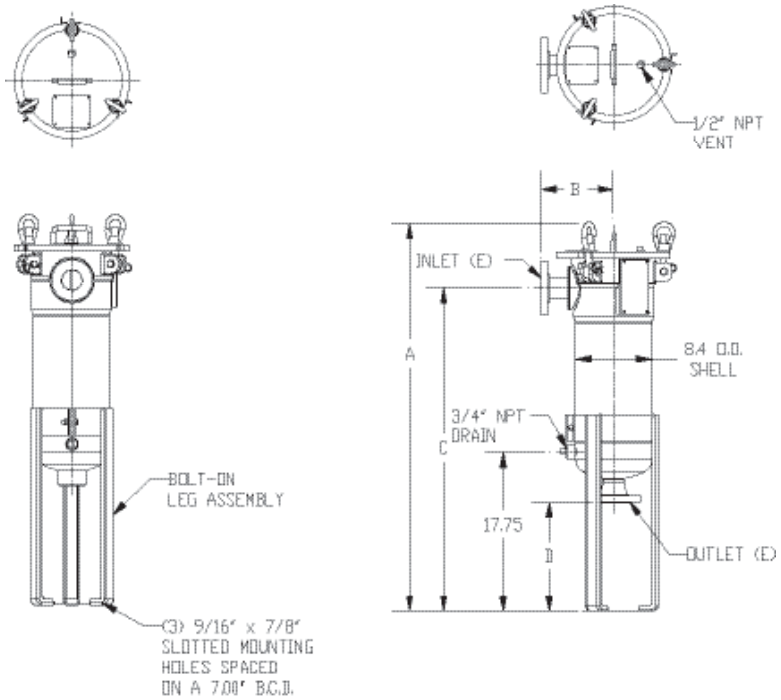

Ordering Information

FB1 [ ] — [ ] [ ] [ ]

Material	
Code	Description
None	Carbon Steel
4L	304L Stainless Steel
6L	316L Stainless Steel

Media Requirement	
Code	Description
1	One single bag
2	One double bag

Connection Size	
Code	Inches
2	2
3	3

Connection Type	
Code	Description
Blank	NPT
F	NPS

Support Options	
Blank	Zinc plated carbon steel legs
SL	Stainless steel legs
SB	Stainless steel cover bolts
SS	Stainless steel bolts & legs

Specifications are subject to change without notification.
For User Responsibility Statement, see www.parker.com/safety

© 2017 Parker-Hannifin Corporation
Industrial Process Filtration - North America
All Rights Reserved

Fulflo is a registered trademark of Parker-Hannifin Corporation
Viton is a registered trademark of E.I. DuPont de Nemours & Co., Inc.

DS_IP_FB Vessel Rev. B

Fulflo® SB Filter Vessels

ASME code single and multiple bag vessels for high flow rates and high solids retention

Constructed to handle flow rates of up to 1120gpm (4240 lpm), the Fulflo® SB series of bag and strainer filter vessels provides excellent filtration in a wide range of industrial and chemical applications. All details of design, materials, construction and workmanship of the SB vessel series conform to ASME code and are available in non-code design and construction.

Contact Information

Parker Hannifin Corporation
Industrial Process Filtration - N.A.
118 Washington Avenue
Mineral Wells, TX 76067

phone +1 940 325 2575
industrialprocess.na@parker.com

www.parker.com/industrialprocess

Benefits

- Accepts “C” style flex band bags for optimized independent seal
- Built in accordance with ASME (U or UM stamp) Boiler and Pressure vessel code
- Maximum design pressure is 150psi (10.3bar) or 300psi (20.7bar)
- Available in carbon steel, 304 stainless steel, or 316 stainless steel
- Single O-ring seal closure design assures quick, positive cover seal
- Swing bolts with hexnuts for fast, easy opening and closing of cover
- Buna-N standard O-ring with Viton® elastomer, and fluoropolymer elastomer O-rings also available
- Positive bag media seal prior to sealing housing

Applications

- Potable Water
- Process Water
- Coatings
- Lubricants
- Coolants
- Cutting Oils
- Solvents

ENGINEERING YOUR SUCCESS.

Fulflo® SB Filter Vessels

Design Specifications

Model	Maximum Flow† (gpm)	Dimensions (in.)									Shipping Wt. (lbs)
		A	B	C	D	E	F	G	H	J	
SB11-2	80	34.88	30.69	26.75	10.75	8.63	7.31	10.75	2.00	7.81	180
SB11-2F	80	34.88	30.69	26.75	10.75	8.63	7.31	14.88	2.00	7.81	180
SB12-2	160	47.88	43.69	39.75	10.75	8.63	7.31	10.75	2.00	7.81	200
SB12-2F	160	47.88	43.69	39.75	10.75	8.63	7.31	14.88	2.00	7.81	200
SB12-3F	160	48.81	44.63	40.00	10.75	8.63	7.31	16.00	2.00	7.81	200
SB31-3FK1	240	43.00	38.25	32.00	17.00	18.44	6.00	26.00	3.00	17.75	600
SB32-4FK1	480	56.00	51.25	45.00	17.00	18.44	6.00	26.00	4.00	17.75	650
SB41-4FK1	320	43.50	38.63	32.00	17.00	20.44	6.00	28.00	4.00	19.79	670
SB42-4FK1	640	56.50	51.63	45.00	17.00	20.44	6.00	28.00	4.00	19.79	720
SB42-6FK1	640	60.19	55.13	47.00	18.00	20.44	6.00	30.00	6.00	19.79	740
SB52-6FK1	800	60.50	54.50	45.00	20.00	22.44	6.00	30.00	6.00	21.71	700
SB62-8FK1	960	64.00	58.00	48.00	22.00	26.00	5.00	36.00	8.00	25.30	1105
SB72-6FK1	1120	59.75	53.75	45.00	20.00	26.00	5.00	34.00	6.00	25.30	1070
SB72-8FK1	1120	64.00	58.00	48.00	22.00	26.00	5.00	36.00	8.00	25.30	1105
SB82-8FK1	1440	64.56	58.00	48.00	23.25	28.44	5.00	38.00	8.00	27.88	1180
SB92-8FK1	1440	66.75	60.00	50.00	24.00	30.56	6.00	40.00	8.00	29.80	1180

†Actual flow rate is dependent on fluid viscosity, micron rating, contaminant and media type. Consult flow charts for each application.

Maximum Operating Conditions

Material of Construction	Max. Operating Pressure (psi @ 250 °F)†	Max. Design Temp.††	Configs.
Carbon Steel	150psi (10.3bar)	500°F (260°C)	SB
Carbon Steel	300psi (20.7bar)	500°F (260°C)	HSB
304 Stainless Steel	150psi (10.3bar)	300°F (150°C)	SB
304 Stainless Steel	300psi (20.7bar)	300°F (150°C)	HSB
316 Stainless Steel	150psi (10.3bar)	400°F (204°C)	SB
316 Stainless Steel	300psi (20.7bar)	400°F (204°C)	HSB

† Operating temperature limited by standard O-ring material and exterior paint.

Optional Shell O-Ring/Gasket* refer to price book for details.

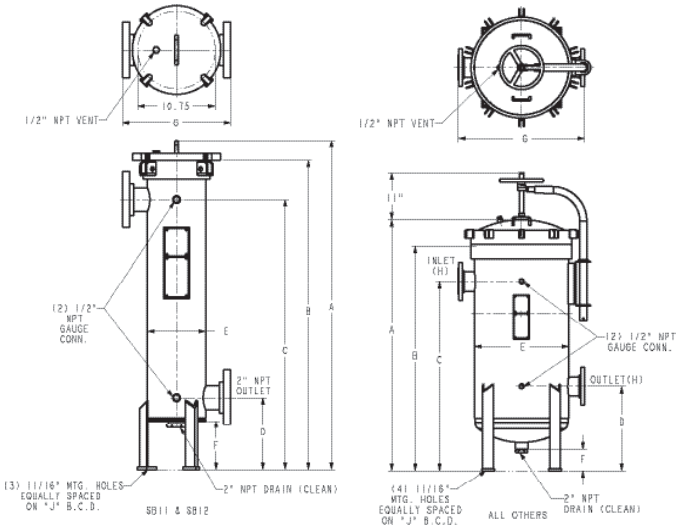

Ordering Information

[ ] [ ] **SB** [ ] [ ] **—** [ ] [ ]

Material

Code	Description
None	Carbon Steel
4	304 Stainless Steel
6	316 Stainless Steel

Design Series

Code	Description
Blank	150psi
H	300psi

Number of Bags

Code	Description
1	1 bag
3	3 bags
4	4 bags
5	5 bags
6	6 bags
7	7 bags
8	8 bags
9	9 bags

Bag Length

Code	Description
1	Single
2	Double

Inlet | Outlet Flange Size

Code	Description
None	NPT
2F	2 inch flange
3F	3 inch flange
4F	4 inch flange
6F	6 inch flange
8F	8 inch flange

Coverlift Option

Code	Description
Blank	None
K1	Mechanical
K2	Hydraulic

Specifications are subject to change without notification.
For User Responsibility Statement, see www.parker.com/safety

© 2017 Parker-Hannifin Corporation
Industrial Process Filtration - North America
All Rights Reserved

Fulflo is a registered trademark of Parker-Hannifin Corporation
Viton is a registered trademark of E.I. DuPont de Nemours & Co., Inc.

Appendix

www.parker.com/industrialprocess

End Cap Configurations

Glossary of Filtration Technology

Standard Screen Micrometer Conversion Chart

Offer of Sale

Toll free sales & technical support:
940.325.2575
industrialprocess.na@parker.com

End Cap Configurations

Please use the following as a guideline in determining end cap styles.

APPENDIX

AR 020 O-ring with recessed cap

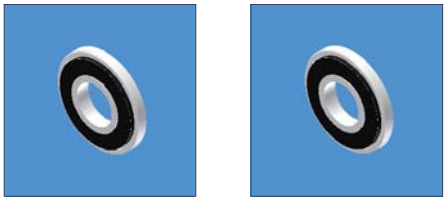

DO Double open end

LL 120 O-ring

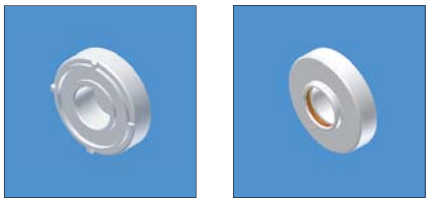

LR 120 O-ring & closed recessed end

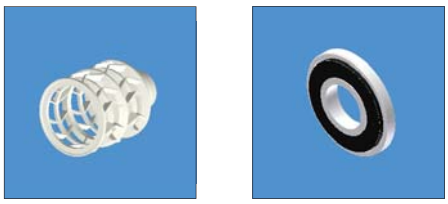

OB Open end with spring

PR 213 O-ring with recessed cap

ProBond NTC (nylon) &
TC (ABS plastic) tube adapter

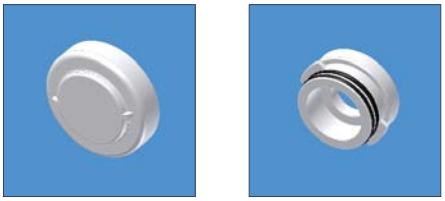

SC 226 O-ring with closed end

SF 226 O-ring with fin

SSC 226 O-ring w/closed end & SS insert

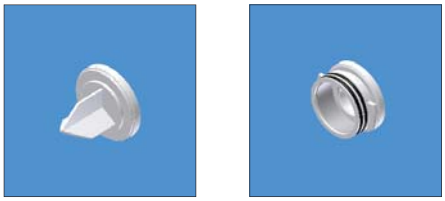

SSF 226 O-ring with fin & SS insert

STC 222 O-ring w/closed end & SS insert

STF 222 O-ring with fin & SS insert

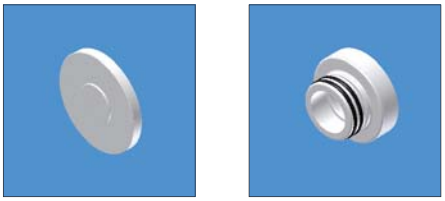

TC 222 O-ring with closed end

TF 222 O-ring with fin

End Cap Configurations *(continued)*

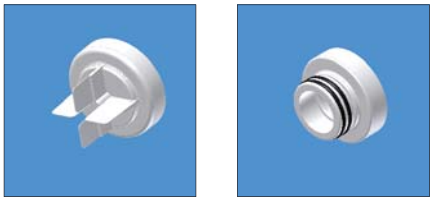

TX 222 O-ring with flex fin

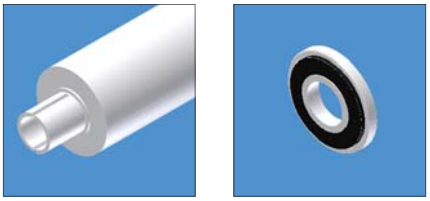

XA DX double open end with poly core extender

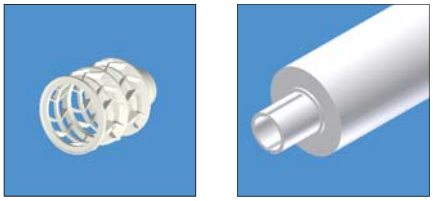

XB spring with poly core extender

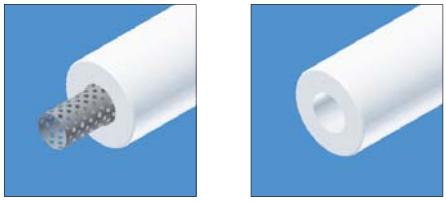

XC metal extended core, plain end

LARGE DIAMETER FORMATS

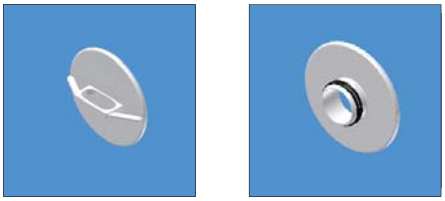

MaxGuard

MegaFlow & MegaFlow Plus

ParMax & ParMax Select

PLEATED BAG FORMATS

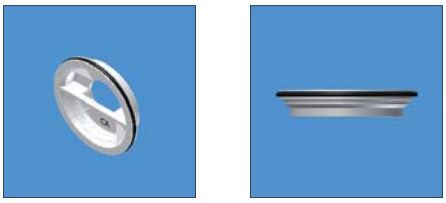

Pleated Bag - CA style

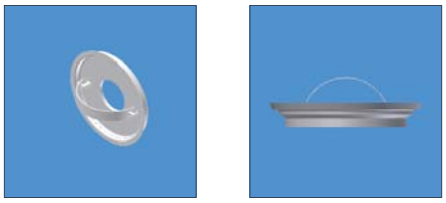

Pleated Bag - CQ style

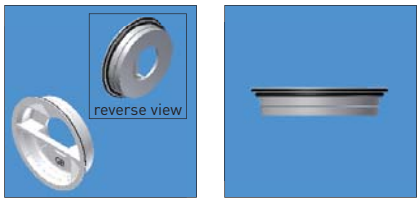

Pleated Bag - GB style

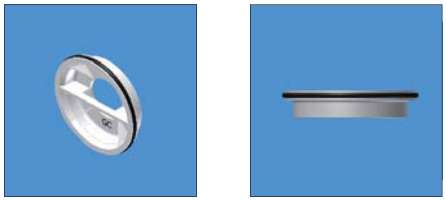

Pleated Bag - GC style

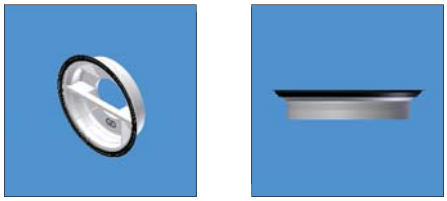

Pleated Bag - GD style

Pleated Bag - GQ style

Glossary of Filtration Terminology APPENDIX

DEFINITIONS
This section presents definitions for some key words and phrases that are generally associated with filtration processes.

Absolute Rating:
Particle size in micrometers removed at a given efficiency under a manufacturer's defined test condition. Also an arbitrary term assigned by a manufacturer. Implied is 100%, but more often defined as 98.67%, 99%, 99.9% and 99.99%, according to the manufacturer. Parker Process Filtration Division defines absolute as 99.98% removal (Beta = 5000) as determined by particle counting methods.

Absorb/Absorption:
The process of a fluid being taken into the pores of a solid.

Adsorb/Adsorption:
To collect and hold a fluid on the surface of a solid.

ASTM Test Procedure (F795-88):
Procedure upon which Parker tests and rates its filter media; generally a single pass test in water at 2.5gpm per 10-in length.

Beta Ratio & Efficiency Relationship	
Beta Ratio	**% Efficiency**
1	0
2	50
4	75
5	80
10	90
20	95
50	98
75	98.67
100	99
1,000	99.9
5,000	99.98
10,000	99.99
∞	100

Beta Ratio:
The ratio of the number of particles of a given size and larger upstream of a filter to the number of particles of the same size and larger downstream.

Bridging:
Condition of filter loading where contaminants span the open space between adjacent sections of a filter medium, thus blocking a portion of the useful filtration area.

Bubble Point:
Pressure drop in inches of water required to expel the first steady (continuous) stream of bubbles (fizz point) from a horizontal disc of wetted filter medium or a filter cartridge immersed in a liquid (usually alcohol). Parker Process Filtration Division uses alcohol in its test.

Bubble Point Test:
A common, nondestructive method used to test the integrity of cartridge construction to compare relative porosities of filter media or to monitor product consistency as a quality control method.

Bypass:
Fluid flowing through a passage other than the filter medium and /or leakage around filter media seals.

"C" Style Bag:
Parker Process Filtration Division style bag which incorporates a spring band bag seal configuration. Designed to fit Parker Process Filtration Division style housings only.

Cartridge/Bag Design Flow Rate:
Flow rate at which cartridge/bag published performance was generated in laboratory tests. Flow rates above those listed below will adversely affect the efficiency and dirtholding capacity of cartridge or bag.

Cartridge/Bag Design Flow	
Product	**Design Flow**
Wound	3.5gpm/10" long
Pleated	2.5gpm/10" long
ProBond™	3.5gpm/10" long
MegaBond Plus	2.5gpm/10" long
Standard Bag	50gpm/single length
XLH Bag	15gpm/single length

Glossary of Filtration Terminology

APPENDIX

(Glossary continued)

Channeling:
Tendency for contaminant to pass through a low-density area of an inconsistent filter medium or around cartridge seal points.

Clarification:
Filtration of liquids containing small quantities of solids.

Classification:
Arrangement or separation of particles by size.

Collapse Pressure:
Pressure across a filter cartridge or bag great enough to cause it to collapse.

Colloids:
Suspension of submicron particles in a continuous fluid medium that will not settle out of the medium.

Contaminant:
Undesirable insoluble solid or gelatinous particles present in a fluid.

Cycle Length/Filter Life:
The duration, measured in time or volume, that a filter can operate effectively between replacement and/or cleaning.

Density:
Mass per unit volume of a substance under specified conditions of temperature and pressure.

Depth Media:
Generally filter media that are thick and provide graded density construction. Wound, resin-bonded and melt blown cartridges fall into this category. Typically, these cartridges result in lower flow rates, higher initial pressure drops and lower dirt holding capacities than surface media (pleated).

Differential Pressure/Pressure Drop:
Difference in pressure between two points in a system. In filters, this is usually measured between the inlet and outlet of the filter housing (is a determining factor of filter service life).

Dirt Holding Capacity:
The weight of a contaminant fed to the filter during a test to reach a predefined terminal pressure drop.

Double Open End (DOE):
A filter cartridge configuration such that both ends are open and require housings with knife edge sealing devices.

Efficiency:
The ability of the filter medium to remove particles from the fluid stream.

Effluent/Filtrate:
The fluid that has passed through the filter.

Emulsion:
A suspension of small liquid droplets within a second liquid that will not mix.

Extractables:
Inorganic or organic elements or compounds in the filter medium that have leached into the filtrate. Usually reported by weight or percent.

FDA:
To be used for filtration of foods, beverages, drugs or cosmetics. All filter construction materials must comply with regulations established by the Food and Drug Administration (FDA) as listed in CFR Title 21.

Filter Media:
Plural of filter medium.

Filter Medium:
The permeable material used for a filter that separates particles from a fluid passing through it.

Filtration:
Separation of particulate matter from a fluid by passing the fluid through a permeable medium that will trap a percentage of the particulates.

Filtration Efficiency:
That fraction of suspended particles retained by the filter.

Glossary of Filtration Terminology

APPENDIX

(Glossary continued)

Flux:
A relationship of flow to surface area; expressed asgallons per minute per square foot.

"G" Style Bag:
Filter bag provided by Parker Process Filtration Division to fit many competitive vessels (FSI, AF&F, GAF, ISP, etc.), which is referred to as a snap ring seal configuration.

Gauge Pressure:
Pressure greater than atmospheric pressure.

Gels:
Compressible or semisolid materials that can pass through filter media at an undefined and inconsistent degree. Best removed by depth medium.

Graded Density:
Variation in a cartridge that results in the filter medium being more dense toward the core and less dense toward the outside surface. This is useful where a wide range of particle sizes exists because it allows larger particles to be trapped toward the surface and smaller particles toward the core.

Gravimetric Efficiency:
Amount of contaminant removed by weight as determined by suspended solids analysis (ppm, mg/l).

Hydrophilic:
The tendency of a surface to wet with water (water loving).

Hydrophobic:
The tendency of a surface not to wet with water (water hating).

Immiscible:
Incapable of blending or mixing into a single homogeneous phase.

Impingement:
Direct impact of particle or liquid upon the filter media.

Influent:
Fluid entering the inlet of a filter.

Laminar Flow:
Flow rate at which liquid is in a nonturbulent state (10 ft/sec) and should not be exceeded to maintain filtration integrity and consistency.

Mean Filtration Rating:
Average size of the pores of the filter medium.

Media (Medium):
Material in a filter element that separates solids from fluid.

Media Migration:
Contamination of the effluent by fibers or other material of which the filter is constructed.

Micron:
A unit of length. Correct term is micrometer (µm), which is .000039 inch. Human eye can see a 40-micrometer diameter particle.

Multipass Process:
A process or system in which fluid is circulated indefinitely through a filter medium, e.g., engines, compressors, hydraulic equipment.

Nominal Rating:
Micron size removed at a given efficiency under a manufacturer's defined test condition. An arbitrary term assigned by a manufacturer. Varies from 50%-98% depending on manufacturer and product.

Particle Removal Efficiency:
Removal of particles as a function of size as determined by counting individual particles.

Permeability:
The property of a filter medium that permits a fluid to pass through under a pressure differential (such asgpm/psi).

Porosity:
A measure of the open area of a filter medium. Sometimes expressed as a void volume.

Glossary of Filtration Terminology

APPENDIX

(Glossary continued)

Single Open End (SOE):
A filter cartridge configuration such that one end is sealed off by a closed end cap and the opposite end has a 222 O-ring, 226 O-ring or other seal device. Used in housings that are designed to accept 222 O-ring, 226 O-ring or other SOE cartridges.

Single Pass Process:
A process in which a fluid passes through the filter medium only once before further processing. Parker Process Filtration products are tested and rated for these types of processes.

Specific Gravity:
Ratio of mass of a solid or liquid to the mass of an equal volume of distilled water, or of a gas to an equal volume of air under prescribed temperature and pressure.

Surface Media:
Filter media that are thin, cellulosic, microfiber or membrane material and, due to their construction, generally provide high flow rate, low pressure drop, high efficiency, high surface area and high dirt-holding capacity.

Suspended Solids:
Mixture of solids suspended in a fluid. Expressed in weight or volume.

Thixotropic Flow:
A fluid system where a range of viscosities can be measured at any given shear rate. The longer the material is sheared, the lower the viscosity until a lower limiting value is reached.

Throughput:
Total volume of a fluid that passes through a filter before it must be replaced.

Turbidity:
Measure of the amount of haze or cloudiness caused by fine particles in a fluid.

Turbidimetric Efficiency:
Percentage reduction of haze or cloudiness in a fluid.

Turbulent Flow:
Flow rate at which laminar flow (10 ft/sec) is exceeded and filtration performance is adversely affected.

Uniform Density:
Having the same weight per unit volume of filter media from the upstream (influent) to the downstream (effluent) side of the filter.

Unloading:
Tendency for previously collected contaminant to be forced through the filter medium as pressure is increased.

Vessel:
Container for filter cartridges or bags.

Viscosity:
A measure of the resistance to flow of a liquid. Viscosity of a liquid varies appreciably with changes in temperature. Typically expressed in centipoise, centistoke or SSU values.

Water Hammer:
Pressure surge produced when the linear flow of a noncompressible fluid is rapidly interrupted by devices such as fast-acting valves.

Standard Screen Micrometer Conversion Chart

US & ASTM Std. Sieve #	Actual Opening (Inches)	Micron (µm)
10	0.0787	2000
12	0.0661	1680
14	0.0555	1410
16	0.0469	1190
18	0.0394	1000
20	0.0331	840
25	0.0280	710
30	0.0232	590
35	0.0197	500
40	0.0165	420
45	0.0138	350
50	0.0117	297
60	0.0098	250
70	0.0083	210
80	0.0070	177
100	0.0059	149
120	0.0049	125
140	0.0041	105
170	0.0035	88
200	0.0029	74
230	0.0024	62
270	0.0021	53
325	0.0017	44
400	0.00142	36
550	0.00099	25
625	0.00079	20
1,250	0.000394	10
1,750	0.000315	8
2,500	0.000197	5
5,000	0.000099	2.5
12,000	0.0000394	1

Relative Size of Particles

Magnification 500 times

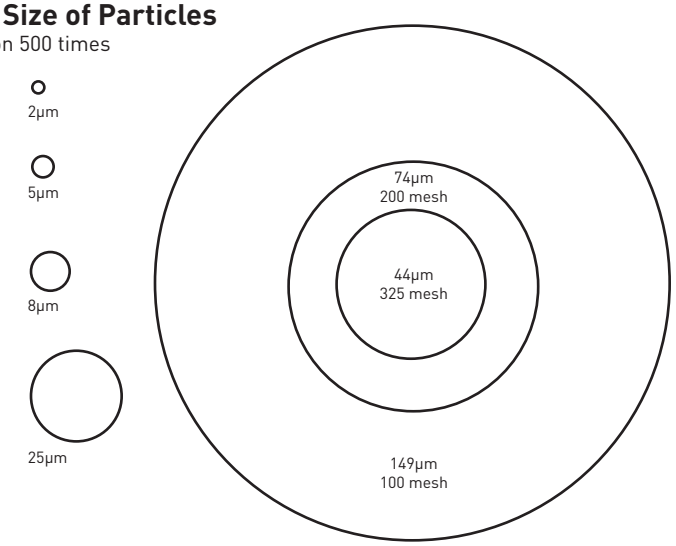

MICROMETER COMPARISONS	
Substance	**Micron (µm)**
Table Salt	100
Human Hair (Avg.)	50-70
White Blood Cell	25
Talcum Powder	10
Cocoa	8-10
Red Blood Cell	8
Bacteria (cocci)	2

Note: Lower limit of visibility (naked eye) - 40µm

CONVERSION RATES	
1 cu ft	7.48 gal
1 gal	231 cubic in
1 cu ft water	62.42 lb
1 gal water	8.34 lb
1 US gal	0.833 lmp gal
1 lb/in^2	2.31 ft of water = 2.036 in Hg
°F	$^9/_5$ (°C+32)
Cks	cps ÷ spg

METRIC CONVERSION FORMULAE	
mm	inches x 25.4
m	feet x 0.03048
cm^3	cu in x 16.39
m^3	cu ft x 0.028
kg	pounds x 0.454
kPa	psi x 6.895
lpm	gpm x 3.785
°C	$^5/_9$ (°F-32)

Linear Equivalents

1 in = 25.4mm = 25.400µm

1mm = 0.0394 in = 1,000µm

1µm = 3.94 x 10^{-5} in = 0.0000394 in

Formulae:

$$\text{Velocity (ft. per sec)} = \frac{0.4085 \times \text{gpm}}{d^2 \text{ (ID in)}}$$

$$\text{Brake hp} = \frac{\text{(gpm)} \times \text{(total head in ft.)} \times \text{(specific gravity)}}{(3960) \times \text{(pump efficiency)}}$$

Offer of Sale

The goods, services or work (referred to as the "Products") offered by Parker-Hannifin Corporation, its subsidiaries, groups, divisions, and authorized distributors ("Seller") are offered for sale at prices indicated in the offer, or as may be established by Seller. The offer to sell the Products and acceptance of Seller's offer by any customer ("Buyer") is contingent upon, and will be governed by all of the terms and conditions contained in this Offer of Sale. Buyer's order for any Products specified in Buyer's purchase document or Seller's offer, proposal or quote ("Quote") attached to the purchase order, when communicated to Seller verbally, or in writing, shall constitute acceptance of this offer.

1. Terms and Conditions. Seller's willingness to offer Products for sale or accept an order for Products is subject to the terms and conditions contained in this Offer of Sale or any newer version of the same, published by Seller electronically at www.parker.com/saleterms/. Seller objects to any contrary or additional terms or conditions of Buyer's order or any other document or other communication issued by Buyer.

2. Price; Payment. Prices stated on Seller's Quote are valid for thirty (30) days, except as explicitly otherwise stated therein, and do not include any sales, use, or other taxes or duties unless specifically stated. Seller reserves the right to modify prices to adjust for any raw material price fluctuations. Unless otherwise specified by Seller, all prices are F.C.A. Seller's facility (INCOTERMS 2010). Payment is subject to credit approval and payment for all purchases is due thirty (30) days from the date of invoice (or such date as may be specified by Seller's Credit Department). Unpaid invoices beyond the specified payment date incur interest at the rate of 1.5% per month or the maximum allowable rate under applicable law.

3. Shipment; Delivery; Title and Risk of Loss. All delivery dates are approximate. Seller is not responsible for damages resulting from any delay. Regardless of the manner of shipment, delivery occurs and title and risk of loss or damage pass to Buyer, upon placement of the Products with the shipment carrier at Seller's facility. Unless otherwise stated, Seller may exercise its judgment in choosing the carrier and means of delivery. No deferment of shipment at Buyers' request beyond the respective dates indicated will be made except on terms that will indemnify, defend and hold Seller harmless against all loss and additional expense. Buyer shall be responsible for any additional shipping charges incurred by Seller due to Buyer's acts or omissions.

4. Warranty. Seller warrants that the Products sold hereunder shall be free from defects in material or workmanship for a period of twelve (12) months from the date of delivery or 2,000 hours of normal use, whichever occurs first. All prices are based upon the exclusive limited warranty stated above, and upon the following disclaimer: DISCLAIMER OF WARRANTY: THIS WARRANTY IS THE SOLE AND ENTIRE WARRANTY PERTAINING TO PRODUCTS PROVIDED. SELLER DISCLAIMS ALL OTHER WARRANTIES, EXPRESS AND IMPLIED, INCLUDING DESIGN, MERCHANTABILITY AND FITNESS FOR A PARTICULAR PURPOSE.

5. Claims; Commencement of Actions. Buyer shall promptly inspect all Products upon receipt. No claims for shortages will be allowed unless reported to the Seller within ten (10) days of delivery. No other claims against Seller will be allowed unless asserted in writing within thirty (30) days after delivery. Buyer shall notify Seller of any alleged breach of warranty within thirty (30) days after the date the defect is or should have been discovered by Buyer. Any claim or action against Seller based upon breach of contract or any other theory, including tort, negligence, or otherwise must be commenced within twelve (12) months from the date of the alleged breach or other alleged event, without regard to the date of discovery.

6. LIMITATION OF LIABILITY. IN THE EVENT OF A BREACH OF WARRANTY, SELLER WILL, AT ITS OPTION, REPAIR OR REPLACE A DEFECTIVE PRODUCT, OR REFUND THE PURCHASE PRICE WITHIN A REASONABLE PERIOD OF TIME. IN NO EVENT IS SELLER LIABLE FOR ANY SPECIAL, INDIRECT, INCIDENTAL OR CONSEQUENTIAL DAMAGES ARISING OUT OF, OR AS THE RESULT OF, THE SALE, DELIVERY, NON-DELIVERY, SERVICING, USE OR LOSS OF USE OF THE PRODUCTS OR ANY PART THEREOF, OR FOR ANY CHARGES OR EXPENSES OF ANY NATURE INCURRED WITHOUT SELLER'S WRITTEN CONSENT, WHETHER BASED IN CONTRACT, TORT OR OTHER LEGAL THEORY. IN NO EVENT SHALL SELLER'S LIABILITY UNDER ANY CLAIM MADE BY BUYER EXCEED THE PURCHASE PRICE OF THE PRODUCTS.

7. User Responsibility. The user, through its own analysis and testing, is solely responsible for making the final selection of the system and Product and assuring that all performance, endurance, maintenance, safety and warning requirements of the application are met. The user must analyze all aspects of the application and follow applicable industry standards and Product information. If Seller provides Product or system options based upon data or specifications provided by the user, the user is responsible for determining that such data and specifications are suitable and sufficient for all applications and reasonably foreseeable uses of the Products or systems.

8. Loss to Buyer's Property. Any designs, tools, patterns, materials, drawings, confidential information or equipment furnished by Buyer or any other items which become Buyer's property, will be considered obsolete and may be destroyed by Seller after two (2) consecutive years have elapsed without Buyer ordering the items manufactured using such property. Seller shall not be responsible for any loss or damage to such property while it is in Seller's possession or control.

9. Special Tooling. A tooling charge may be imposed for any special tooling, including without limitation, dies, fixtures, molds and patterns, acquired to manufacture Products. Such special tooling shall be and remain Seller's property notwithstanding payment of any charges by Buyer. In no event will Buyer acquire any interest in apparatus belonging to Seller which is utilized in the manufacture of the Products, even if such apparatus has been specially converted or adapted for such manufacture and notwithstanding any charges paid by Buyer. Unless otherwise agreed, Seller has the right to alter, discard or otherwise dispose of any special tooling or other property in its sole discretion at any time.

10. Buyer's Obligation; Rights of Seller. To secure payment of all sums due or otherwise, Seller retains a security interest in all Products delivered to Buyer and this agreement is deemed to be a Security Agreement under the Uniform Commercial Code. Buyer authorizes Seller as its attorney to execute and file on Buyer's behalf all documents Seller deems necessary to perfect its security interest.

11. Improper Use and Indemnity. Buyer shall indemnify, defend, and hold Seller harmless from any losses, claims, liabilities, damages, lawsuits, judgments and costs (including attorney fees and defense costs), whether for personal injury, property damage, patent, trademark or copyright infringement or any other claim, brought by or incurred by Buyer, Buyer's employees, or any other person, arising out of: (a) improper selection, application, design, specification or other misuse of Products purchased by Buyer from Seller; (b) any act or omission, negligent or otherwise, of Buyer; (c) Seller's use of patterns, plans, drawings, or specifications furnished by Buyer to manufacture Products; or (d) Buyer's failure to comply with these terms and conditions. Seller shall not indemnify Buyer under any circumstance except as otherwise provided.

12. Cancellations and Changes. Buyer may not cancel or modify or cancel any order for any reason, except with Seller's written consent and upon terms that will indemnify, defend and hold Seller harmless against all direct, incidental and consequential loss or damage. Seller may change Product features, specifications, designs and availability.

13. Limitation on Assignment. Buyer may not assign its rights or obligations under this agreement without the prior written consent of Seller.

14. Force Majeure. Seller does not assume the risk and is not liable for delay or failure to perform any of Seller's obligations by reason of events or circumstances beyond its reasonable control (hereinafter "Events of Force Majeure"). Events of Force Majeure shall include without limitation: accidents, strikes or labor disputes, acts of any government or government agency, acts of nature, delays or failures in delivery from carriers or suppliers, shortages of materials, or any other cause beyond Seller's reasonable control.

15. Waiver and Severability. Failure to enforce any provision of this agreement will not invalidate that provision; nor will any such failure prejudice Seller's right to enforce that provision in the future. Invalidation of any provision of this agreement by legislation or other rule of law shall not invalidate any other provision herein. The remaining provisions of this agreement will remain in full force and effect.

16. Termination. Seller may terminate this agreement for any reason and at any time by giving Buyer thirty (30) days prior written notice. Seller may immediately terminate this agreement, in writing, if Buyer: (a) breaches any provision of this agreement (b) appoints a trustee, receiver or custodian for all or any part of Buyer's property (c) files a petition for relief in bankruptcy on its own behalf, or one if filed by a third party (d) makes an assignment for the benefit of creditors; or (e) dissolves its business or liquidates all or a majority of its assets.

17. Governing Law. This agreement and the sale and delivery of all Products are deemed to have taken place in, and shall be governed and construed in accordance with, the laws of the State of Ohio, as applicable to contracts executed and wholly performed therein and without regard to conflicts of laws principles. Buyer irrevocably agrees and consents to the exclusive jurisdiction and venue of the courts of Cuyahoga County, Ohio with respect to any dispute, controversy or claim arising out of or relating to this agreement.

18. Indemnity for Infringement of Intellectual Property Rights. Seller is not liable for infringement of any patents, trademarks, copyrights, trade dress, trade secrets or similar rights except as provided in this Section. Seller will defend and indemnify Buyer against allegations of infringement of U.S. patents, U.S. trademarks, copyrights, trade dress and trade secrets ("Intellectual Property Rights"). Seller will defend at its expense and will pay the cost of any settlement or damages awarded in an action brought against Buyer based on an allegation that a Product sold pursuant to this agreement infringes the Intellectual Property Rights of a third party. Seller's obligation to defend and indemnify Buyer is contingent on Buyer notifying Seller within ten (10) days after Buyer becomes aware of such allegations of infringement, and Seller having sole control over the defense of any allegations or actions including all negotiations for settlement or compromise. If a Product is subject to a claim that it infringes the Intellectual Property Rights of a third party, Seller may, at its sole expense and option, procure for Buyer the right to continue using the Product, replace or modify the Product so as to make it noninfringing, or offer to accept return of the Product and refund the purchase price less a reasonable allowance for depreciation. Notwithstanding the foregoing, Seller is not liable for claims of infringement based on information provided by Buyer, or directed to Products delivered hereunder for which the designs are specified in whole or part by Buyer, or infringements resulting from the modification, combination or use in a system of any Product sold hereunder. The foregoing provisions of this Section constitute Seller's sole and exclusive liability and Buyer's sole and exclusive remedy for infringement of Intellectual Property Rights.

19. Entire Agreement. This agreement contains the entire agreement between the Buyer and Seller and constitutes the final, complete and exclusive expression of the terms of sale. All prior or contemporaneous written or oral agreements or negotiations with respect to the subject matter are herein merged. The terms contained herein may not be modified unless in writing and signed by an authorized representative of Seller.

20. Compliance with Laws. Buyer agrees to comply with all applicable laws, regulations, and industry and professional standards of care, including those of the United Kingdom, the United States of America, and the country or countries in which Buyer may operate, including without limitation the U. K. Bribery Act, the U.S. Foreign Corrupt Practices Act ("FCPA"), the U.S. Anti-Kickback Act ("Anti-Kickback Act") and the U.S. Food Drug and Cosmetic Act ("FDCA"),each as currently amended, and the rules and regulations promulgated by the U.S. Food and Drug Administration ("FDA"), and agrees to indemnify and hold harmless Seller from the consequences of any violation of such provisions by Buyer, its employees or agents. Buyer acknowledges that it is familiar with the provisions of the U. K. Bribery Act, the FCPA, the FDA, and the Anti-Kickback Act, and certifies that Buyer will adhere to the requirements thereof. In particular, Buyer represents and agrees that Buyer will not make any payment or give anything of value, directly or indirectly to any governmental official, any foreign political party or official thereof, any candidate for foreign political office, or any commercial entity or person, for the purpose of influencing such person to purchase Products or otherwise benefit the business of Seller.

© 2017 Parker Hannifin Corporation.
All rights reserved.

CAT_IP 500-13 _1-5-2018

Parker Hannifin Corporation
Industrial Process Filtration - N.A.
118 Washington Avenue
Mineral Wells, Texas, USA 76067
phone: +1 940 325 2575
email: industrialprocess.na@parker.com

Parker Hannifin Manufacturing Ltd
Industrial Process Filtration - EMEA
Unit 13, Burford Way
Bolden Business Park
Bolden NE35 9PZ, United Kingdom
phone +44 (0)191 5190066

www.parker.com/industrialprocess