Pipe Check Valves

Pressures to 15,000 (1034 bar)

Pipe O-Ring Check Valves

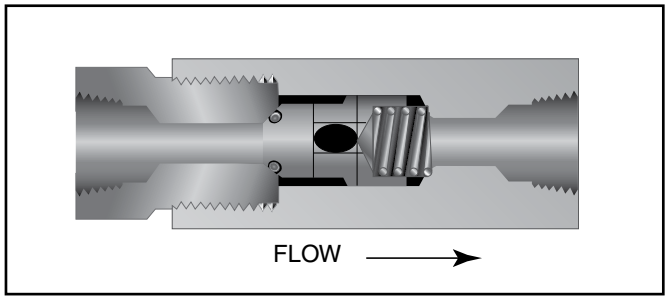

Minimum operating temperature for standard o-ring check valves 0°F (-17.8°C).

Provides unidirectional flow and tight shut-off for liquids and gas with high reliability. When differential drops below cracking pressure*, valve shuts off. **(Not for use as relief valve.)**

Materials: 316 Stainless Steel: body, cover, poppet, cover gland. 300 Series Stainless Steel: spring
Standard O-ring: Viton, for operation to 400° F (204°C). Buna-N or PTFE available for 250°F (121°C) or 400°F (204°C) respectively; specify when ordering.

***Cracking Pressure:** 20 psi (1.38 bar) ±30%. Springs for higher cracking pressures (up to 100 psi (6.89 bar)) available on special order for O-ring style check valves only.

Pipe Ball Check Valves

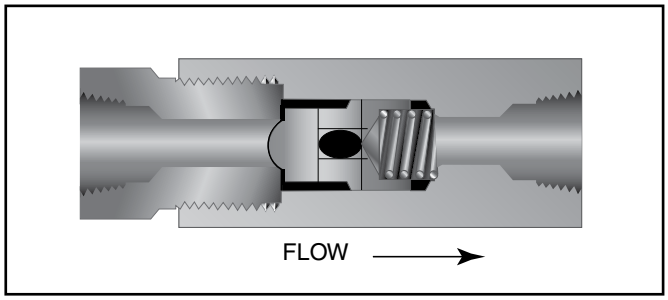

Minimum operating temperature for pipe ball check valves 0°F (-17.8°C).

Prevents reverse flow where **leak-tight shut-off is not mandatory**. When differential drops below cracking pressure, valve closes. With all-metal components, valve can be used up to 400°F (204°C). See Technical Information section for connection temperature limitations. (Not for use as a relief valve.)

Ball and poppet are an integral design to assure positive, in-line seating without "chatter". Poppet is designed essentially for axial flow with minimum pressure drop.

Materials: 316 Stainless Steel: body, cover, ball poppet, cover gland. 300 Series Stainless Steel: ball, spring.

CAUTION: *While testing has shown O-Rings to provide satisfactory service life, both cyclic and shelf life may vary widely with differing service conditions, properties of reactants, pressure and temperature cycling and age of the O-ring. FREQUENT INSPECTIONS SHOULD BE MADE to detect any deterioration, and O-rings replaced as required.*

Special material check valves may be supplied with four flats in place of standard hex.

Pipe Check Valves

Catalog Number	Connection Type	Pressure Rating psi (bar)*	Minimum Opening	Rated Cv	Dimensions - inches (mm)				Fitting Pattern
					A	B	C Hex	D Hex	
Pipe O-Ring Check Valves									
CPO4400	1/4" NPT	15,000 **(1034.20)**	0.12 **(3.05)**	.28	3.37 **(85.60)**	2.38 **(60.33)**	0.81 **(20.57)**	0.81 **(20.57)**	**See Figure 1**
CPO6600	3/8" NPT	15,000 **(1034.20)**	0.22 **(5.59)**	.84	3.95 **(100.33)**	2.88 **(73.15)**	1.00 **(25.40)**	1.00 **(25.40)**	
CPO8800	1/2" NPT	15,000 **(1034.20)**	0.36 **(9.14)**	2.30	5.36 **(136.14)**	3.88 **(98.55)**	1.38 **(35.05)**	1.19 **(30.23)**	
CPO12	3/4" NPT	10,000 **(689.46)**	0.52 **(13.21)**	4.70	6.29 **(159.77)**	4.75 **(120.65)**	1.75 **(44.45)**	1.38 **(35.05)**	
CPO16	1" NPT	10,000 **(689.46)**	0.69 **(17.53)**	7.40	7.71 **(195.83)**	5.75 **(146.05)**	1.88+ **(47.75)**	1.88 **(47.75)**	
Pipe Ball Check Valves									
CPB4400	1/4" NPT	15,000 **(1034.20)**	0.12 **(3.05)**	.28	3.37 **(85.60)**	2.38 **(60.33)**	0.81 **(20.57)**	0.81 **(20.57)**	**See Figure 1**
CPB6600	3/8" NPT	15,000 **(1034.20)**	0.22 **(5.59)**	.84	3.95 **(100.33)**	2.88 **(73.15)**	1.00 **(25.40)**	1.00 **(25.40)**	
CPB8800	1/2" NPT	15,000 **(1034.20)**	0.36 **(9.12)**	2.30	5.36 **(136.14)**	3.88 **(98.55)**	1.38 **(35.05)**	1.19 **(30.23)**	
CPB12	3/4" NPT	10,000 **(689.46)**	0.52 **(13.21)**	4.70	6.29 **(159.77)**	4.75 **(120.65)**	1.75 **(44.45)**	1.38 **(35.05)**	
CPB16	1" NPT	10,000 **(689.46)**	0.69 **(17.53)**	7.40	7.71 **(195.83)**	5.75 **(146.05)**	1.88+ **(47.75)**	1.88 **(47.75)**	

*Maximum pressure rating is based on the lowest rating of any component.
+ distance across flats

All dimensions for reference only and subject to change.
For prompt service, Parker Autoclave stocks select products. Consult your local representative.

NOTE: NPT (Pipe) Connections:
- NPT threads must be sealed using a high quality PTFE tape and/or paste product. Refer to thread sealant manufacturer's instructions on how to apply thread sealant.
- Sealing performance may vary based on many factors such as pressure, temperature, media, thread quality, thread material, proper thread engagement and proper use of thread sealant.
- Customer should limit the number of times an NPT fitting is assembled and disassembled because thread deformation during assembly will result in deteriorating seal quality over time. When using only PTFE tape, consider using thread lubrication to prevent galling of mating parts.

Figure 1

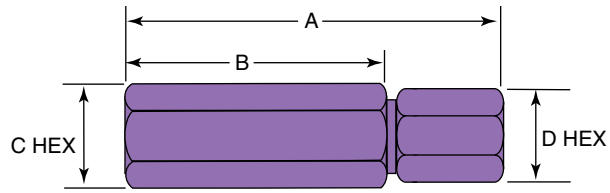

WARNING

FAILURE, IMPROPER SELECTION OR IMPROPER USE OF THE PRODUCTS AND/OR SYSTEMS DESCRIBED HEREIN OR RELATED ITEMS CAN CAUSE DEATH, PERSONAL INJURY AND PROPERTY DAMAGE. This document and other information from Parker Hannifin Corporation, its subsidiaries and authorized distributors provide product and/or system options for further investigation by users having technical expertise. It is important that you analyze all aspects of your application and review the information concerning the product or system in the current product catalog. Due to the variety of operating conditions and applications for these products or systems, the user, through its own analysis and testing, is solely responsible for making the final selection of the products and systems and assuring that all performance, safety and warning requirements of the application are met. The products described herein, including without limitation, product features, specifications, designs, availability and pricing, are subject to change by Parker Hannifin Corporation and its subsidiaries at any time without notice.

Offer of Sale

The items described in this document are available for sale by Parker Hannifin Corporation, its subsidiaries or its authorized distributors. Any sale contract entered by Parker will be governed by the provisions stated in Parker's standard terms and conditions of sale (copy available upon request).

© 2013 Parker Hannifin Corporation | Autoclave Engineers is a registered trademark of the Parker Hannifin Corporation

02-9222BE January2013

Instrumentation Products Division
Autoclave Engineers Operation
8325 Hessinger Drive
Erie, Pennsylvania 16509-4679 USA
PH: 814-860-5700 FAX: 814-860-5811
www.autoclave.com

Parker Hannifin Manufacturing Ltd.
Instrumentation Products Division, Europe
Industrial Estate Whitemill
Wexford, Republic of Ireland
PH: 353 53 914 1566
FAX: 353 53 914 1582

Caution! Do not mix or interchange parts or tubing with those of other manufacturers. Doing so is unsafe and will void warranty.

Caution! Parker Autoclave Engineers Valves, Fittings and Tools are not designed to work with common commercial instrument tubing and will only work with tubing built to Parker Autoclave Engineers AES Specifications. Failure to do so will void warranty.

ISO-9001 Certified